# FS200D/FS209D Gas

# Portable Deluxe Scarifier

## User Manual

SMITH
MANUFACTURING
Cutters / Removers / Parts / Support

**1-800-653-9311**

www.SmithMfg.com

Phone: 954-941-9744 • Fax: 954-545-0348

## INDEX


| Page | Contents |
|---|---|
| 2 | Index / Introduction |
| 3 | Safety Guidelines |
| 4 | Your FS200 Surface Preparator |
| 5 | Machine Start-Up |
| 6 | Substrate Removal |
| 7 | Storage, Ordering, and Warranty Claims |
| 8 | Troubleshooting |
| 9 | Maintenance Check List |
| 10 | Drum Replacement |
| 11-12 | Belt Replacement and Alignment |
| 13-14 | Bearing Replacement |
| 15-16 | Optional Equipment |
| 17-18 | Maintenance Log |
| 19 | Limited Equipment Warranty |
| 20 | Warranty Activation |


# INTRODUCTION

**Congratulations on purchasing the FS200™ Surface Preparator from SMITH Mfg. Company.**

Your machine will:
• Clean surfaces impacted by grease, oil, plastics, tars, resins, tile adhesives, ice and more
• Plane or mill asphalt and concrete surfaces
• Remove high spots in curbs and gutters
• Eliminate trip-hazards on concrete sidewalks
• Mill areas for rumble strips
• Clean out cracks and joints
• Create anti-slip patterns in walkways and barns
• Prepare surfaces for new coating applications
• Permanently remove all road and surface coatings to include:
epoxy, urethane, thermoplastic, paint, glue-backed tapes and more...
• Groove-inlay asphalt for striping
- Groove-inlay asphalt for stiping
- Prepare surface prior to “Hot Tape” applications

## BEFORE START-UP, READ THIS..

Please read all operating instructions, including the provided engine manual and be completely familiar with your equipment before operating. When in doubt, please contact SMITH Manufacturing Customer Service for operational details. This Owner’s Manual will guide you through the removal process, from start to finish, and show you how to care for your machine.

## UNCRATING EQUIPMENT

When you uncrate your equipment, make certain that the machine has not been damaged and that all fasteners and guards are properly tightened.

Your machine may not have been shipped assembled with cutters and other accessories. Assembly may be required.

**REMEMBER:** Only authorized, experienced and properly trained personnel should operate this equipment. Operating personnel should practice safety at all times and wear protective gear (gloves, goggles, safety vests, ear plugs, steel-toe shoes, etc.)

## SAFETY GUIDELINES

**Incorrect use of the surface preparator can result in property damage, personal injury, or death. Be sure to read and follow all directions and precautions as outlined in this manual.**

OPERATION

- Get acquainted with the controls
- Always wear protective equipment, including ear protection, breathing apparatus, steel-toed shoes, and goggles
- Never wear baggy or loose fitting clothing that can be caught on controls or moving parts
- The surface preparator can emit flying particles and debris during operation. Never operate the machine near bystanders, animals or children
- Do not operate the machine in an explosive atmosphere, near combustible materials, or when gas fumes may not be properly dispersed
- Never leave the machine unattended when running, and you must hold onto the handle with two hands when the cutter drum is engaged
- Avoid contact with the muffler when the engine is hot, as it may cause severe burns
- When using a vacuum system, avoid hose contact with the muffler
- Stop engine before refueling tank. Do not allow fuel to come in contact with the hot parts of the engine or spill on the ground
- Do not smoke or handle open fire near this machine
- Gas tank lid must close tighly. Shut off fuel chock when shutting off engine. When transporting the machine, the fuel tank must be completely drained

SERVICE

- Make sure that the engine is shut down and the spark plug is disconnected before servicing
- Repair any fuel leaks immediately and remove accumulated dust frequently from the air filter system
- Clean machine regularly

Remove sideplate screws and check for wear

DAILY CHECKLIST

- Check fluid levels
- Ensure that all guards are in place before the machine is operated, since rotating and moving parts willl cause injury upon contact.
- Check and replace (as needed)

  *Cutters *Bearings *Shafts
  *Drive shaft *Dust flap *Wheels
- Check that all fasteners are secure
- Check that all controls and safety devices are functioning properly

# YOUR FS200™ SURFACE PREPARATOR

Please take time to familiarize yourself with the FS200™'s controls, as well as some of the features of your new machine.

Read the engine manual before preparing the engine for starting.

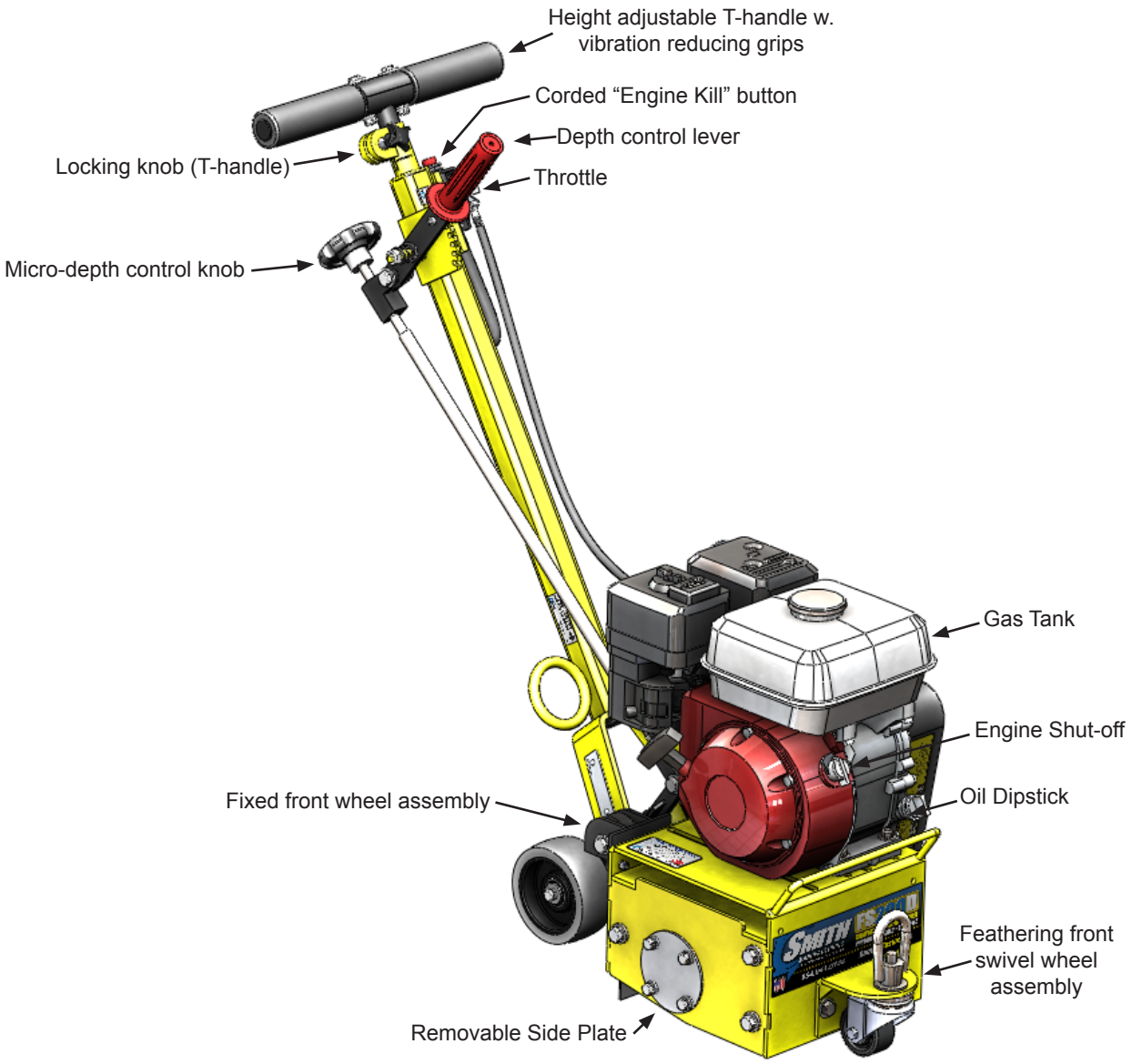

## MACHINE START-UP

**Do not start machine while drum is in contact with the ground. Doing so can cause the operator to lose control of the machine, resulting in property damage and/or personal injury.**

• Open the fuel shut off on the gas tank and then place the trottle lever at the “fast Idle” position.
• Start the engine, open the choke slightly to prevent flooding.
• Move throttle control open or run position when engine is warmed up.
• Increase throttle to maximum operating position (approx. 1800RPM) and close choke.

Before substrate removal, test run the drum with cutters not touching the surface. If there is exessive vibration, you need to re-balance the cutter set-up, check bearing condition, and/or make sure that the engine side-plate is secured.

## IF THE ENGINE DOES NOT START

• Check engine for proper gas levers (refer to engine manual)
• Check the spark plug. Make sure socket areas are clean and clear of debris, and the proper gap is set. (replace if needed)
• Turn the On/Off switch on the front of the engine to “On”.
• Engine may have tilted backwards.If so, allow oil to drain after removing spark plug

***Engine repair and engine warranty issues are handled directly by your local engine service center.**

**Warning: Should you desire to tilt the machine, always tilt forward. Tilting the machine backwards at any time will flood the spark plug with oil and may cause damage to your engine!**

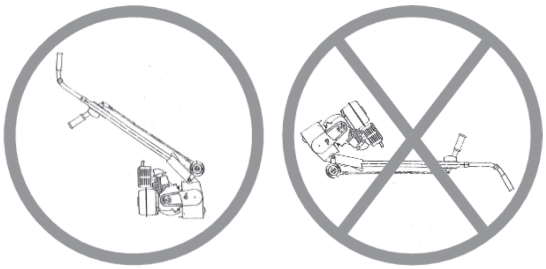

**RIGHT** **WRONG**

## SUBSTRATE REMOVAL

Adjust the height of the cutter drum with the depth control lever. Set the depth of cut to allow the cutters to go through only the materials to be removed. Make certain that the drum is positioned to where only the cutters strike the surface, and that the drum assembly never comes into contact with the substrate. **The cutter tips alone should strike the surface** (1/8” to 1/4” maximum depth per removal pass on new cutters).

The drum will not withstand substrate contact. **Contacting the removal surface too deeply will cause premature wear to cutters, shafts, drum and other components! TIP: The correct depth setting is indicated by relatively little machine vibration.**

Too much downward pressure only has negative results. Try to remove materials in several passes rather than one, deep pass. Several tests will show the best, most appropriate cutter impact. Use a forward, backward and/or circular pattern to achieve your desired finish.

**NOTE:** Only use a forward motion when the CM2519 or CM2535 carbide scraping cutters are used.

**TIP:** Positioning the machine over the surface in many directions, as well as dialing the hand wheel up or down can help create desirable surface patterns.
After several hours of practice, the operator will become comfortable and should be able to remove materials faster with enhanced results.

When the job is completed, or the operator wants to cease work, stop the engine by first lifting the drum above the substrate using the hand-wheel and/or the cam lever. Stop the machine only at the engine. Then close the fuel cock to shut off the fuel supply.

The drum assembly must be removed daily and inspected for drum wear, hole elongation and possible weld separation. Replace the cutter shafts and drum bushings every 40 hours, or prior to any drum wear. If the drum’s center holes are elongated, order another SMITH cutter drum.

## STORAGE

• Shut off fuel and siphon all excess fuel.
• Start engine and run until it stalls.
• Remove the spark plug and pour two ounces of motor oil into cylinder and slowly crank the engine to distribute oil to prevent rust during storage.
• Replace spark plug and store machine upright in a cool, dry, and well ventilated area.

## ORDERING

**To ensure product safety and reliability, and to maintain your warranty, always use genuine replacement cutters and parts from SMITH when making repairs to equipment.**

When ordering please specify the model and serial number of the machine. In addition, give a part number, description, and quantity as listed on your parts list.

If you have any questions about the operation of your machine or would like to order replacement parts, contact your SMITH Manufacturing representative directly.
Contact 1-800-653-9311 (954-941-9744) for information.
Visit our website at
**www.smithmfg.com**

## WARRANTY CLAIMS

The manufacturer reserves the right to change or improve the machine design without assuming any obligation to update any products previously manufactured before this manual. It is the customer's responibility to complete the warranty card and mail it to the seller within 10 days from date of purchase. If a failure occurs during the warranty period, the customer must contact the seller to determine the appropriate action.

**Any and all transportation charges are to be borne by the purchaser.**

# TROUBLESHOOTING

**PROBLEM**

- **Possible Reason(s)/Solution(s)**

---

**CUTTERS WEARING UNEVENLY/PREMATURELY**

- **Drum is too low**
- **Incorrect set-up**
- **Material Build-up**
- **Cutters too tightly loaded**
- **Wrong cutters for application**

**CUTTERS SHAFT BREAKAGE UNEVENLY/PREMATURELY**

- **Drum is too low**
- **End plates or bushings worn**
- **Shafts worn**
- **Wrong cutter set-up**

**DRUM WEARING PREMATURELY OR CRACKING**

- **Drum hitting ground**
- **Shafts and bushings not replaced in time**

**EXCESS VIBRATION**

- **Bearing worn**
- **Hex bushing worn**
- **Drive shaft worn**
- **Improper cutter set-up**
- **Drum contacting ground**
- **Wheels worn out**

**MACHINE JUMPS ERRATICALLY**

- **Drum hitting ground**
- **RPM is too low**
- **Surface is severely uneven**

**DRIVE BELT WEARING PREMATURELY**

- **Pulley is misaligned**
- **Wrong belt**
- **Drum is contacting the surface**

**DEPTH CONTROL LEVER IS SET TOO LOW**

- **Adjust the height of lever**

**UNEVEN CUTTING**

- **Cutting too deeply**
- **Rear wheel fork is bent**

For any other problems or questions,
please contact your local representative
or
SMITH Mfg today at 800-653-9311
or
(954) 941-9744.

***Engine repair and engine warranty issues are handled directly by your local engine service center.**

# MAINTENANCE CHECK LIST

**Before beginning servicing on any gasoline-powered unit, DISCONNECT SPARK PLUG WIRE!**

• Keep a coating of grease on the drive shaft and threads for easy installation or removal, and for longer hex bushing life.

• Grease the depth control lever, lower linkage. (Clean dirt off of fittings before greasing.)

• Check all fasteners and re-tighten, since the machine will vibrate the fasteners loose if they are not secured. Use locktight.

• All three hex Bolts on drum retaining plate must be aligned and tight.

• Check the Drive belt for wear, and adjust (tighten), or replace as required.

• Check that the pulleys are aligned properly to ensure the Drive belt is running true.

• Check wheel for wear and that they are rotating properly, replace if worn. Clean wheels of material build-up.

• The inside housing must be clean, and remove any build-up from inside the cage so cutters and drum rotate freely.

• Inspect and change drum bushings and shafts every 40 hours, or when worn.

## DRUM REPLACEMENT

**Normal use will require periodic drum inspection and may necessitate drum replacement.**
**Time of replacement will vary according to usage and load factors.**

**Replacement is easy and requires a few hand tools.**
**1. 17mm socket or wrench**
**2. Rubber mallet**

**Before beginning servicing on any gasoline-powered unit, DISCONNECT SPARK PLUG WIRE!**

**1. Raise the depth control lever to the up position so the cutter drum is off the ground.**

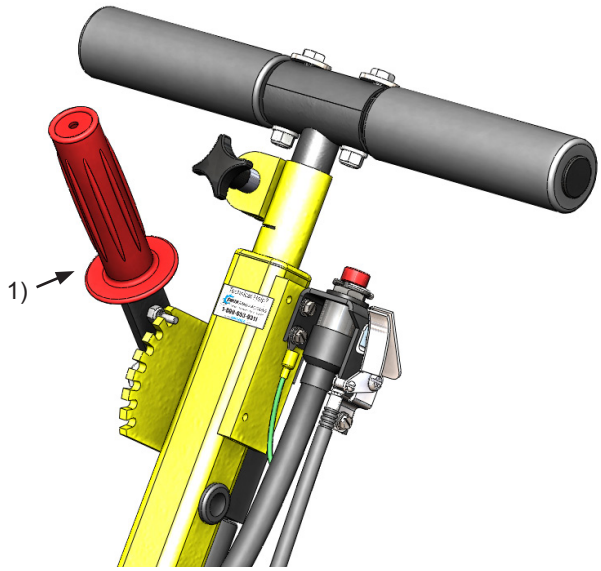


**2. Remove the three hex head cap screws from the sideplate using the 17mm socket or wrench.**

**3. Remove the sideplate (this may require the rubber mallet to break it loose)**

**4. Slide out drum assembly. (use precaution as it is HEAVY)**

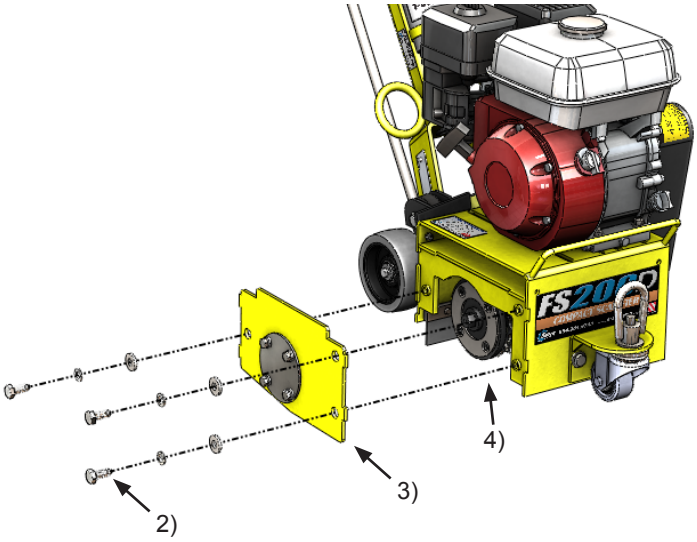


**5. Once the cutter drum is removed take to a workbench for assembly.**
**a) Inspect condition of cutters, spacers, shafts, bushings and drum.**

**6) Before replacing the drum onto hex shaft:**
**a) Check that all bearings are in good working order**
**b) Remove dirt and material build-up from inside drive carriage and drum.**
**c) Lube all metal contacts**
**7) Align and slide drum back onto the hex shaft.**

**8) Replace side plate (lift-up and lock into place) over hex shaft and secure hardware.**

***TIP: SMITH recommends owning an extra drum loaded with cutters for rapid job-sight replacement**

# BELT REPLACEMENT

**Normal wear may necessitate belt tensioning or replacement.**
**Time of replacement will vary according to usage and belt load factors.**

**Replacement is easy and requires a few hand tools.**
**1. 17mm wrenches**
**2. 1/2” socket or wrench**
**3. 13mm socket or wrench**
**4. Rubber mallet**

**Before beginning servicing on any gasoline-powered unit, DISCONNECT SPARK PLUG WIRE!**

**1. Make sure the removable side cover is installed. This ensures the drive ends are in the proper position for servicing.**

**2. Clean the machine exterior so you can locate all the appropriate parts.**

**3. Using a 17mm socket or wrench, remove the two hex nuts attaching the belt cover to the side of the machine. Remove the cover and set it aside.**

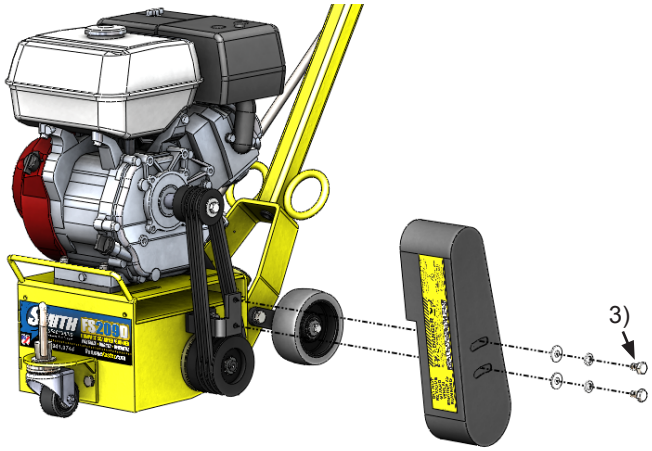


**4. Loosen (do not remove) the four nylock nuts locking down the engine until the engine slides freely using the 1/2” socket or wrench .**

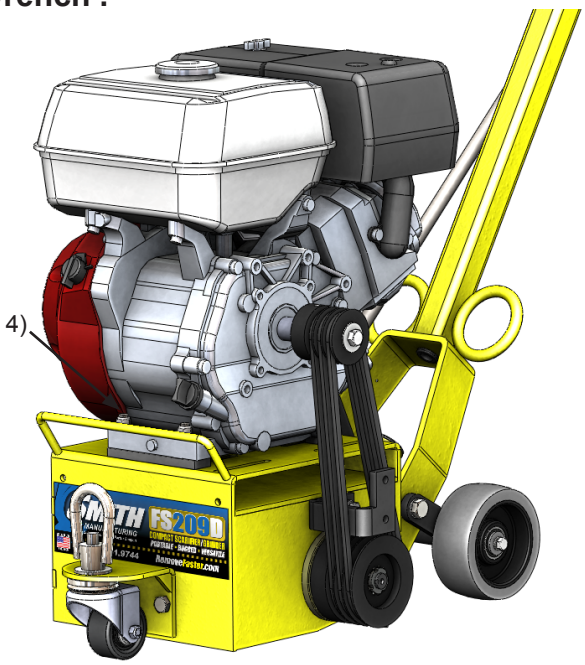


**5. Slide the engine back enough to remove and replace the belts as necessary.**

## BELT REPLACEMENT (CONTINUED)

6. Roll the new belt on one groove at a time (two or single multi-groove belt) on both the top and bottom pulleys.

7. Using the straight edge, lay it across the lower pulley outer face and against the upper pulley. They must be directly over top of each other to ensure long belt life. If adjustment is required, align before tensioning the belt.

NOTE: It may be necessary to remove the belt guard support bracket in order to get the straight edge flush on the pulleys. Do this using a 13mm socket or wrench.

8. Verify pulley alignment by looking from the front of the machine.

9. Once the pulleys are properly aligned, tighten everything down and re-check pulley alignment one last time.

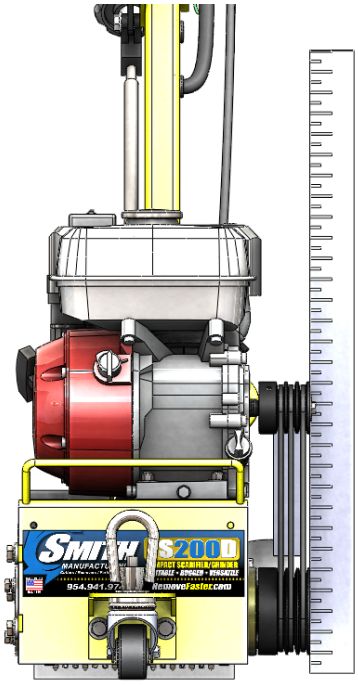

## BELT ALIGNMENT

If the unit has premature belt wear, breakage or pulley problems, the issue may be incorrect alignment or excessive belt tensioning. All pulleys must be aligned directly above each other to ensure belt integrity. This includes possible timing belts used on newer models. Incorrect alignment wears the sides of the belts excessively and will cause slippage.

1. Use a long straight edge (carpenters square) to check alignment during belt tensioning or belt replacement time.

2. By laying the straight edge against the outer face of the lower pulley, the square will extend up and rest against the outer face of the upper (engine pulley). If not, move the motor pulley in or out to obtain alignment.

3. If replacing pulleys (top or bottom) be sure to place the pulley on the same plane as the original one to ensure alignment.

# BEARING REPLACEMENT

**Before reading ahead go back and follow the instructions on how to remove the belt from the machine. Bearing replacement is easy and requires a few addtional hand tools.**

1. 16mm socket or wrench
2. 1/2” socket or wrench
3. 9/16” socket or wrench
4. 13mm socket or wrench
4. Flat head screw driver
5. Hammer or rubber mallet
6. 6mm hex key
7. Circlip pliers

**Before beginning servicing on any gasoline-powered unit, DISCONNECT SPARK PLUG WIRE!**

**1. Follow the instructions to remove the drum and belts from the machine, leave the sideplate aside to remove the bearing housing later. Remove the lower pulley using a screw driver to flatten out the tabs securing the lock nut to the shaft.**

**2. Remove the lock nut on the shaft by putting the screw driver on one of the tabs and hittting it with a hammer or mallet.**

**NOTE: The lock nut is LEFT HAND threads therefore it must be rotated CLOCKWISE to loosen it.**

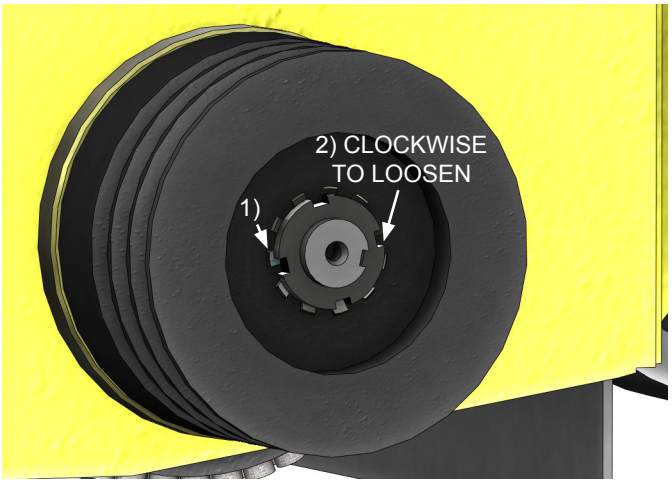


**3. Once the pulley is removed, the bearing assembly on that side can be removed using the 6mm hex key.**

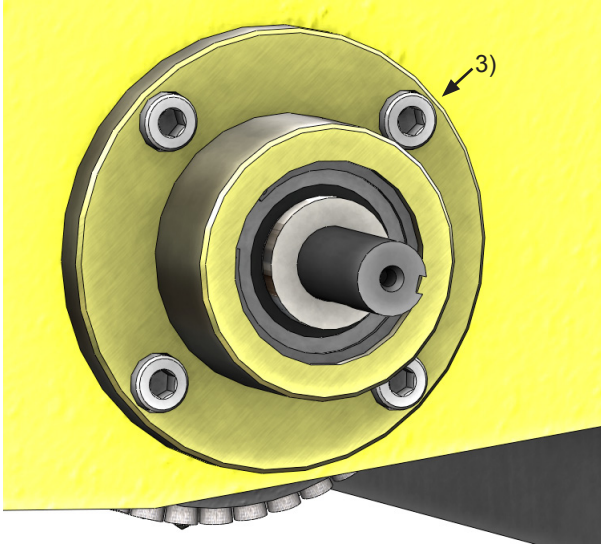


**4. At this point remove the bearing housing from the sideplate using the 13mm socket or wrench**

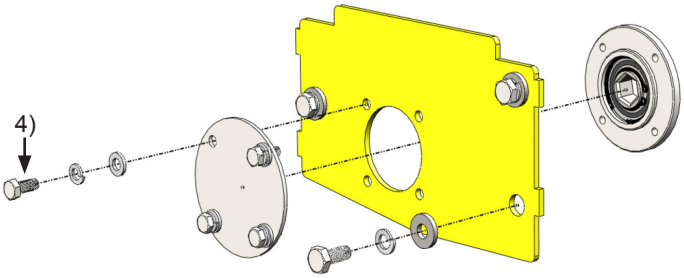

## BEARING REPLACEMENT (CONTINUED)

**5. Once both bearing housings are removed, the circlip pliers will be needed to remove the snap rings and a block of wood or something similar to knock the bearings out of the housing.**

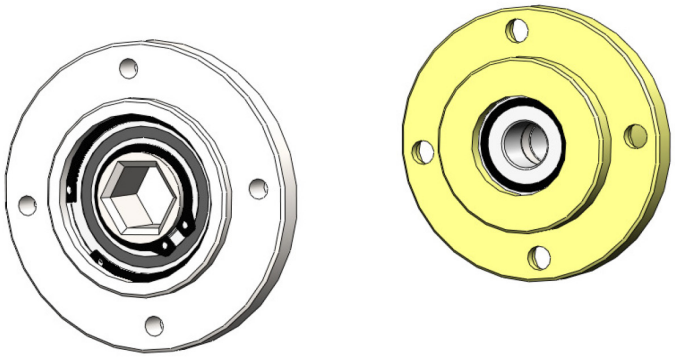

**6. The BELT SIDE bearing assembly (yellow zinc plated) is shown below.**

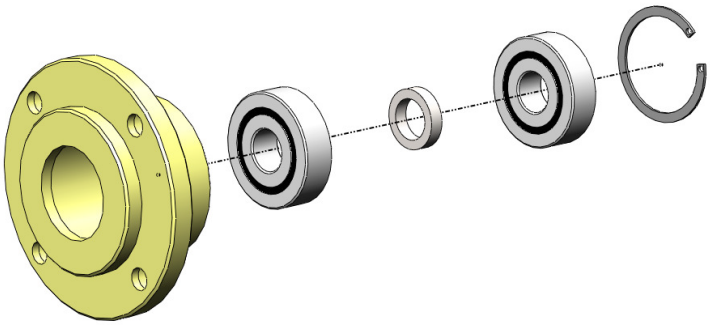

**7. The side plate side bearing assembly (clear zinc plated) is shown below.**

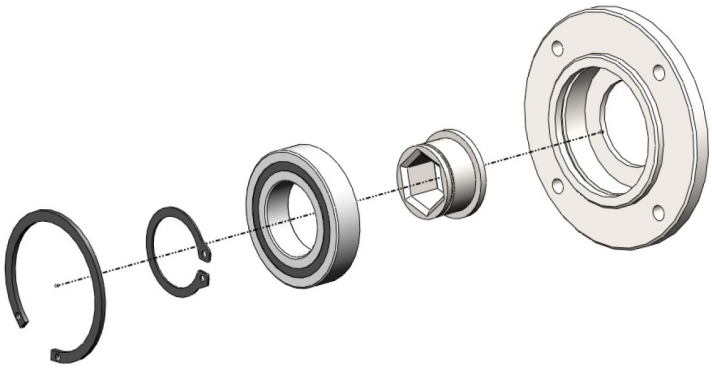

*****WARNING*****
**When pressing bearings in, use a soft wooden dowel and only apply pressure to the outer race of the bearings**

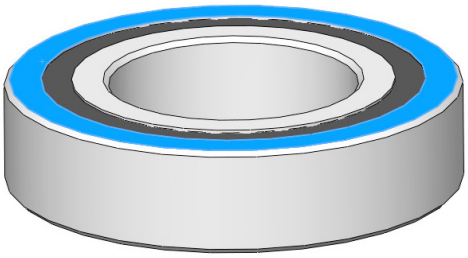

# OPTIONAL EQUIPMENT

## • TACH/HOUR METER

Maintenance meter for service and use control

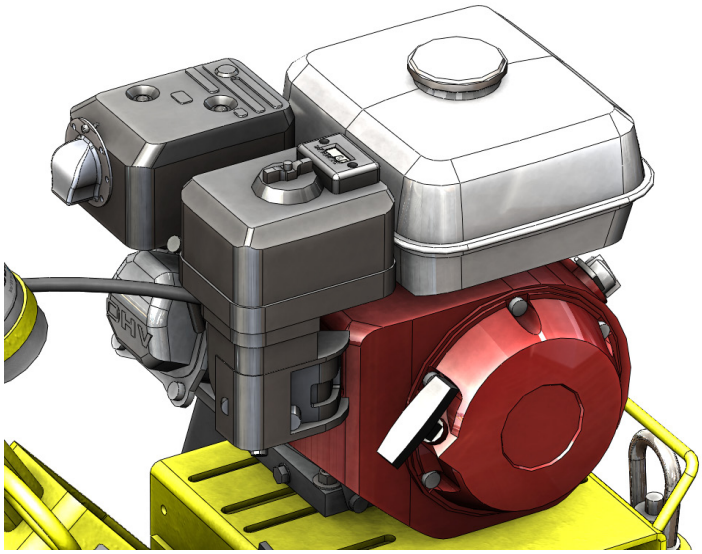

## • WATER CONTROLS

Used to extend life on diamond drum applications and for dust control on all others

# OPTIONAL EQUIPMENT

## • MAXIVAC DUST COLLECTOR

Available in both gas or electric powered applications with the standard 5 micron bags or upgrade to the 1 micron filter with shake down bar

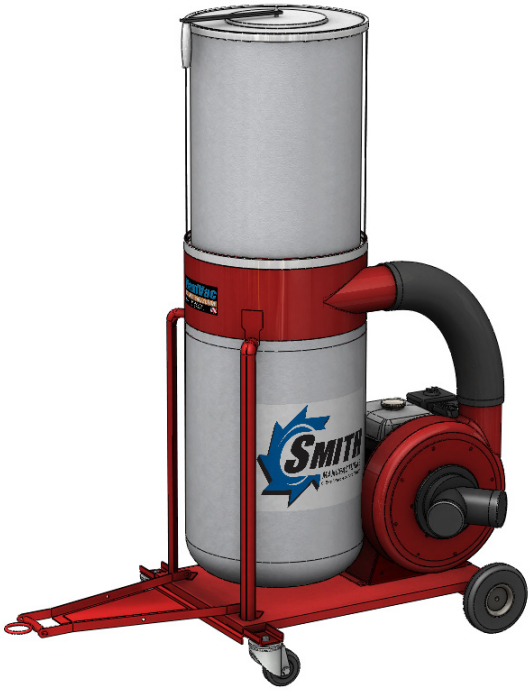

## • EDGER DRUM ASSEMBLY

Available for Diamond blades and cutter applications

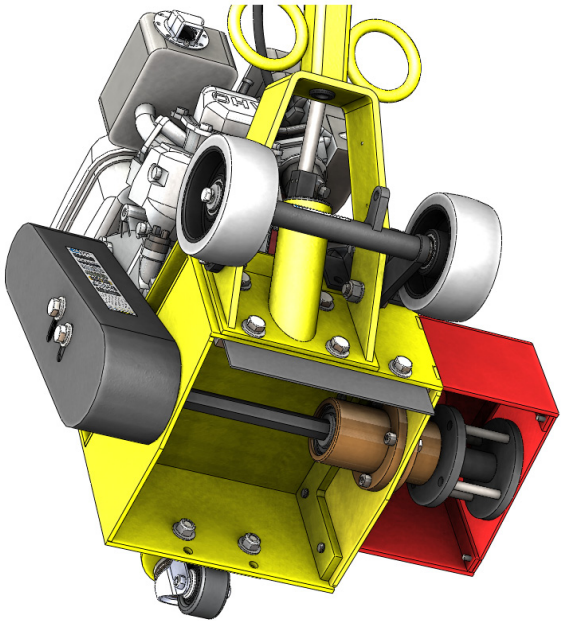

# MAINTENANCE LOG

## MAINTENANCE LOG

## WARRANTY CLAIMS

The manufacturer reserves the right to change or improve the machine design without assuming any obligation to update any products previously manufactured before this manual. It is the customer's responsibility to complete the warranty card and mail it to the seller within 10 days from the date of purchase. If a failure occurs during the warranty period, the customer must contact the seller to determine the appropriate action. Any and all transportation charges are to be borne by the purchaser.

# Limited Equipment Warranty

All statements, technical information and recommendations contained in SMITH's literature are based on tests believed to be reliable, but the accuracy or completeness thereof is not guaranteed and the following is made in lieu of all warranties, expressed or implied. SMITH warrants all equipment or part referenced in this document which is manufactured by SMITH and bearing its name to be free from defects in material and workmanship on the date of sale to the original purchaser under normal use and maintenance as herein provided. This warranty does not apply to components manufactured by others such as, but not limited to, bearings and engines; such components that may or may not have their own warranties.

With the exception of any special, extended, or limited warranty published by SMITH, SMITH will, for a period of three months (90 days) from the date of sale or up to five hundred (500) hours of use by buyer, whichever shall occur first; repair or replace any part of the equipment determined by SMITH to be defective. This warranty applies only when the equipment or part is installed, operated and maintained in accordance with SMITH's written recommendations.

SMITH's sole obligation for any breach of warranty or breach of contract for defects, deliberate or accidental omissions, shall be limited to repairing, replacing or allowing credit for, at SMITH's option, any part which, under normal and proper use and maintenance, proves defective in material or workmanship within warranty period, provided, however, that notice of any such defect or omission and satisfactory proof thereof is promptly given by buyer to SMITH, and thereafter, such defective part is returned to SMITH with transportation charges prepaid, and SMITH's examination proves such part to have been defective. This warranty does not obligate SMITH to bear any transportation charges or personnel time in connection with the replacement or repair of defective parts. This warranty does not obligate SMITH to bear any expense for travel time or of personnel in connection with any service calls. SMITH will not, in any event, be liable to the user for any consequential damages arising out of this sale for the loss of use, lost profits or revenue, interest, lost goodwill or work stoppage. SMITH shall not be liable for any injury, loss or damage, direct or consequential, arising out of the use or the inability to use the product or for environmental claims. It being understood that SMITH has no means of controlling the products final use; therefore, it shall be buyer's responsibility to determine suitability of product for intended use and buyer assumes all risks and liabilities whatsoever, in connection therewith. In no event shall SMITH be liable for consequential or special damages. Used products are sold on an "as is" basis, and there is no implied warranty of merchantability or of fitness for a particular purpose, unless made in writing by an officer at SMITH's office.

This warranty does not cover, and SMITH shall not be liable for general wear and tear, or any malfunction, damage or wear caused by faulty installation, misapplication, abrasion, corrosion, inadequate or improper maintenance, negligence, accident, tampering, or substitution of non-SMITH component parts. Nor shall SMITH be liable for malfunction, damage or wear caused by the incompatibility of SMITH equipment with structures, accessories, equipment or materials not supplied by SMITH, or the improper design, manufacture, installation, operation or maintenance of structures, accessories, equipment or materials not supplied by SMITH. This warranty does not apply in respect to damages to any product or accessory or attachment thereof caused by overloading or other misuse, neglect or accident, nor does this warranty apply to any product or accessory or attachment thereof, which has been repaired or altered in any way which, in the sole judgment of SMITH, affects the performance, stability or general purpose for which it was manufactured. In the manufacture of buyer's equipment, parts may be omitted or equivalent functioning equipment and components may be substituted for the original specified equipment upon the sole judgment and discretion of SMITH.

This warranty is conditioned upon the prepaid return of the equipment claimed to be defective to an authorized SMITH Reseller for verification of the claimed defect. If the claimed defect is verified, SMITH will repair or replace free of charge any defective parts and return of merchandise back to the customer freight collect. If inspection of the equipment does not disclose any defect in material or workmanship, repairs will be made at a reasonable charge, which charges may include the costs of parts, labor and transportation.

THIS WARRANTY IS EXCLUSIVE AND IS IN LIEU OF ANY OTHER WARRANTIES, EXPRESS OR IMPLIED, INCLUDING BUT NOT LIMITED TO WARRANTY OF MERCHANTABILITY OR WARRANTY OF FITNESS FOR A PARTICULAR PURPOSE.

SMITH's sole obligation and buyer's sole remedy for any breach of warranty shall be as set forth above. The buyer agrees that no other remedy (including, but not limited to, incidental or consequential damages for lost profits, lost sales, injury to person or property, or any other incidental or consequential loss) shall be available. Any action for breach of warranty must be brought within two (2) years of the date of sale.

SMITH MAKES NO WARRANTY, AND DISCLAIMS ALL IMPLIED WARRANTIES OF MERCHANTABILITY AND FITNESS FOR A PARTICULAR PURPOSE, IN CONNECTION WITH ACCESSORIES, EQUIPMENT, MATERIALS OR COMPONENTS SOLD BUT NOT MANUFACTURED BY SMITH.

These items sold, but not manufactured by SMITH (such as electric motors, switches, hose, etc.), are subject to the warranty, if any, of their manufacturer. SMITH will provide purchaser with reasonable assistance in making any claim for breach of these warranties. In no event will SMITH be liable for indirect, incidental, special or consequential damages resulting from SMITH supplying equipment hereunder, or the furnishing, performance, or use of any products or other goods sold hereto, whether due to a breach of contract, breach of warranty, the negligence of SMITH, or otherwise.

ADDITIONAL WARRANTY COVERAGE - SMITH does provide extended warranty and wear warranty for products.

Corrections - typographical or clerical errors contained herein are subject to correction by SMITH.

Assignment - buyer shall not assign or transfer this warranty without SMITH's written consent.

Entire agreement and applicable law - the rights and obligations of SMITH and buyer shall be governed by the laws of the state of Florida, U.S.A. In force on date hereof. The provisions hereof are intended by buyer and SMITH as a final expression of their agreement, and are intended also, as a complete and exclusive statement of all terms apply cable to buyer's order. No waiver, modification, or addition to any of the terms hereof shall be binding on SMITH, unless made in writing by an officer at SMITH's office as stated herein. In the event of conflict between buyer's purchase order and the terms hereof, the latter shall control. If any provisions herein are to any extent invalid or unenforceable, the remainder of the warranty shall not be effected thereby and shall be valid and enforceable to the fullest extent permitted by law.

Legal action - buyer shall be responsible for all costs of collection of outstanding indebtedness, including but not limited to attorney's fees and court costs to seller. Buyer shall reimburse seller for any and all litigation expenses seller incurs as a result of an unsuccessful buyer claim. The jurisdiction and venue of the court for any litigation, state or federal, brought by the buyer and/or seller shall be located in venue determined by seller.

Fair labor standards - seller's products are produced in the United States and in conformity with all applicable provisions of the fair labor standards act of 1938 as amended and any regulations and orders of the United States Department of Labor issued thereunder.

All written and visual data contained in this document reflects the most current product information available at the time of this publication. SMITH reserves the right to make changes at any time without notice.

TO ORDER, contact your SMITH distributor or call 1-800-653-9311 to identify the nearest distributor.

**SMITH Manufacturing Co, Inc.**
1610 South Dixie Highway
Pompano Beach, FL 33060
www.smithmfg.com

# PRE-OPERATION INSPECTION - WARRANTY ACTIVATION
# PRODUCT REGISTRATION

1610 South Dixie Highway - Pompano Beach, FL 33060 • Ph: 954-941-9744 • Fax: 954-545-0348 • Email: info@smithmfg.com • www.SMITHMFG.com

Thank you for purchasing a SMITH. Please complete this form upon receipt of your equipment and prior to use on the job. A pre-operation inspection is required to activate your warranty. *All sections must be completed.* Should you have any questions, please add them to the comments section below. Fax the completed form to (954) 545-0348.

Organization _____

Name _____ JobTitle _____

Phone_____ Email _____

Address _____

City _____

State _____Zip _____

SMITH Product **FS200 Gas**

Machine Serial # _____

Date of Purchase (MM / DD / YYYY) _____

Purchased from _____

## PRE-OPERATION INSPECTION (PLEASE CHECK ALL)

1. No parts or components on the machine appear damaged or lost in shipment. ☐ Yes ☐ No
2. All bolts and fasteners are in place and tightly secured. ☐ Yes ☐ No
3. Grease points have been identified for future maintenance requirements and appear lubricated. ☐ Yes ☐ No
4. Wheels are operational. ☐ Yes ☐ No
5. Motor has been started and in good working condition. ☐ Yes ☐ No
6. All Decals appear in place and securely attached. ☐ Yes ☐ No
7. Equipment runs and tested to assure all components are operating correctly. ☐ Yes ☐ No
8. Do you have a Wear Parts Kit with an Extra Cutter set in stock? ☐ Yes ☐ No
9. Did you join Remove Faster News for tech updates, experience sharing and special offers? ☐ Yes ☐ No

Comments (add any additional or from above answers below)

_____

_____

_____

**NOTE:** All power equipment is warranted directly from the motor/engine manufacturers direct and not from SMITH Manufacturing. Prior to starting your equipment, please find the name of your engine/motor repair center for warranty and service:

- Honda: http://engines.honda.com/dealer-locator/
- Subaru: http://robinamerica.com/dealerusacan.aspx
- Leeson: http://www.leeson.com/leeson/servicecenter.do?invoke=viewServiceCenterLocator
- US Motors: http://www.usmotors.com/Contact-Information.aspx
- Kohler: http://www.kohlerengines.com/contact/contact.htm

**IMPORTANT:** Gas Engine owners: Never tip engine forward which will lock the recoil pull cord until the fuel and oil returns back into their respective fuel chambers and the carburetor is free before it can be started.
*Electric motor owners:* To avoid problems, power cord must be connected to the correct current and amperage power rating for the motor.

**SMITH Manufacturing**
1610 South Dixie Highway
Pompano Beach, FL 33060

Toll Free: 800.653.9311
Phone: 954.941.9744
Fax: 954.545.0348

Email: info@SmithMfg.com
**www.SmithMfg.com**

# FS200 Height Control Rod Replacement Diagram

Instructions:
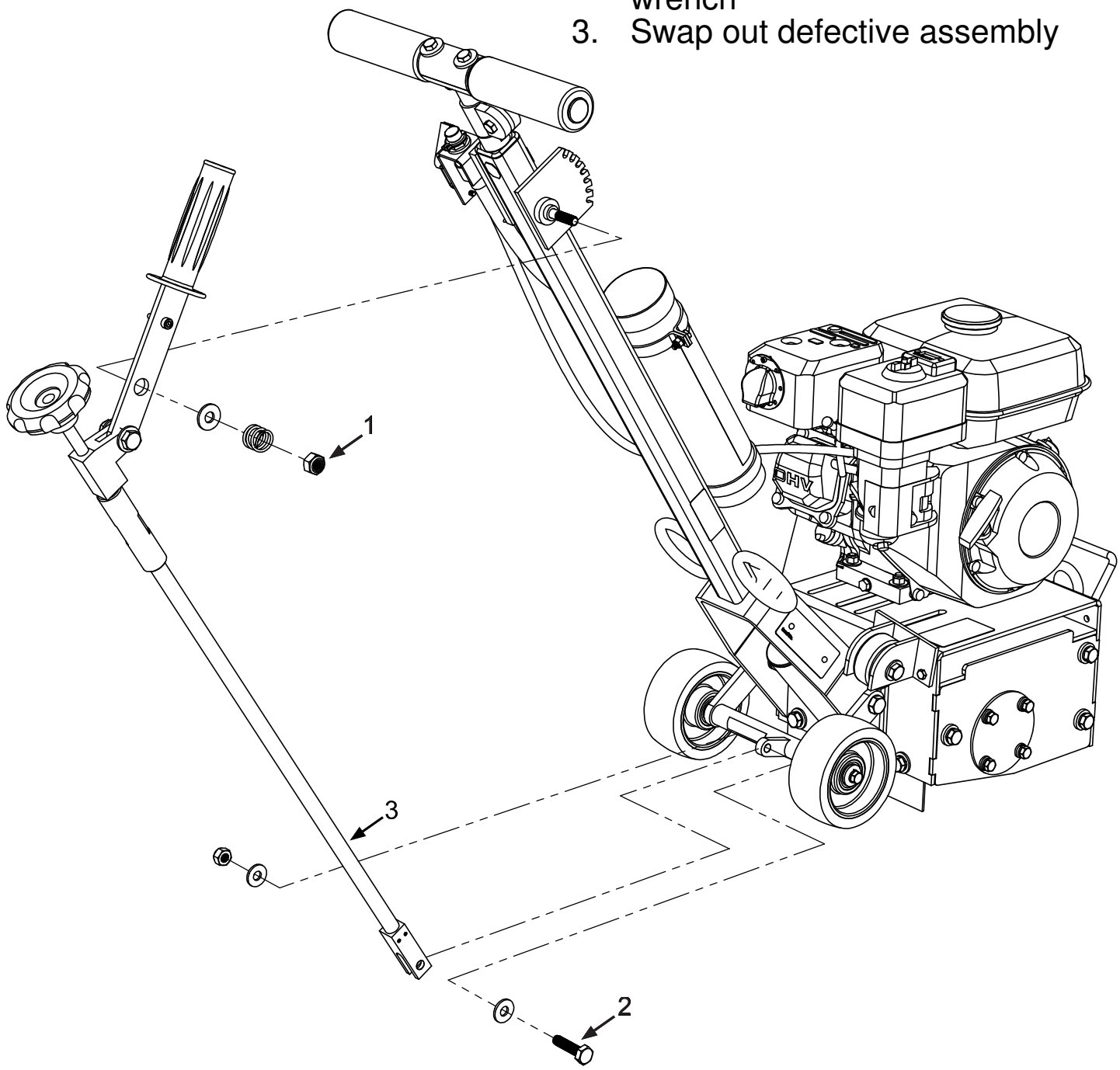
1. Remove 10mm locknut located by the red grip
2. Remove 10mm bolt on lower end of machine using a socket and wrench
3. Swap out defective assembly