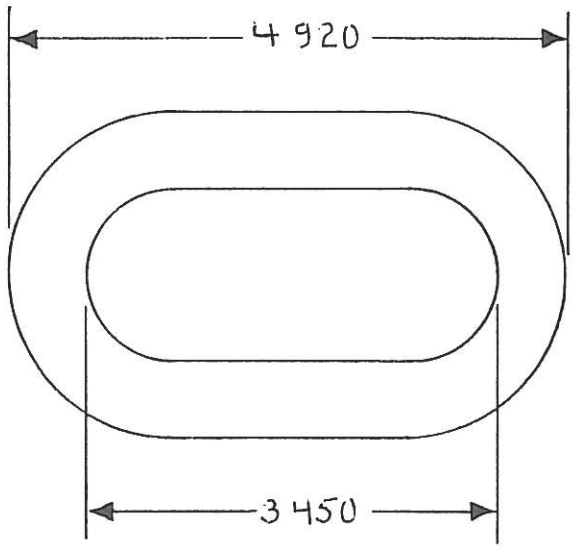

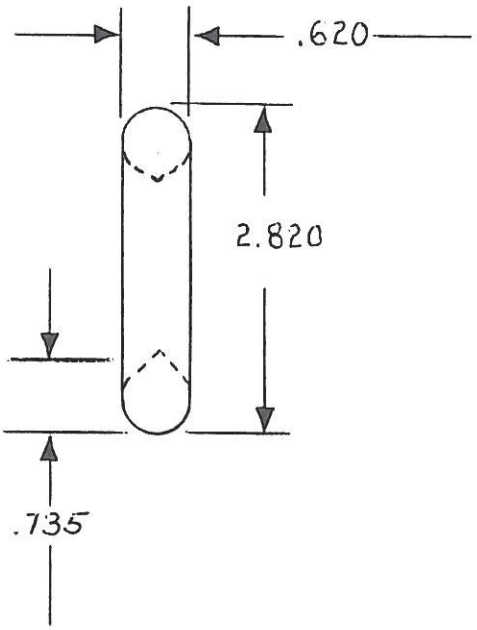

5" CHAIN
MATERIAL : HIGH DENSITY POLYETHYLENE
MELT : 10-14
DENSITY: 9.6

WEIGHT PER FOOT (12 IN.) OF CHAIN
WEIGHT SHOWN IN MOST COMMON COLORS

COLOR	WHITE	YELLOW	BLACK	GREEN	BLUE	RED	SILVER	ORANGE	MAGENTA
WEIGHT	.3470	.3465	.3485	.3485	.3465	.3465	.3470	.3470	.3475

NOTE: THIS CHAIN IS PACKAGED AND SOLD IN MANY WAYS
REFER TO MR. CHAIN CATALOG FOR YOUR PARTICULAR NEEDS