

A checkerboard cake. A cork too nice to throw away. A one-sided conversation with a pet. A forgotten backpack. **A packed schedule.** A teenager peering into a fully loaded pantry, saying, "There's never anything to eat in here." A puffy omelet. A flawless air guitar solo on a wooden spoon. **A set-aside casserole pan to return to the neighbor.** A warm goat cheese spread with breadcrumb topping. A "Good morning!" A grumpy, pre-caffeinated reply. **A little. A lot. A life.**

2017/2018 Specifications

KraftMaid®

KITCHENS FOR THE **REAL** LIVING ROOM®

Specifications

©2017

KraftMaid® Cabinetry is proud to have earned the KCMA Certification Seal for all door styles.

KraftMaid® Cabinetry carries the seal of the Kitchen Cabinet Manufacturers Association (KCMA) Certification Program, which assures that our cabinets meet or exceed the rigorous standards set by the American National Standards Institute (ANSI). Our cabinets are also independently tested to ANSI/KCMA A161.1–2000 and paragraph 611.11, "HUD Minimum Property Standards–Housing 4910.1" 9-8-86.

KraftMaid® Cabinetry demonstrates its commitment to environmental sustainability through meeting or exceeding the requirements as outlined in the Environmental Stewardship Program certification, administered by KCMA.

All KraftMaid® facilities have also obtained ISO 14001 certificate of approval, demonstrating our commitment to reducing the impact of operations on the environment.

KraftMaid® Cabinetry took on 13 tough KCMA tests and passed them all...Beautifully.

- Shelves and bottoms are loaded at 15 pounds per square foot to help ensure no excessive deflection or visible sign of joint separation or failure.
- Mounted wall cabinets are loaded to help ensure that the cabinet will accept net loading in compliance with ANSI A161.1–2012 requirements.
- A load of up to 250 pounds, based on the type of cabinet, is applied against the inside of cabinet fronts to help ensure reliable front joints.
- A 3 pound steel ball is "drop tested" from a height of 6" against shelves, cabinet bottoms and drawer bottoms to help ensure cabinets will withstand dropping of cans and other items.
- Cabinets are impact tested by striking the center of a closed and open door from 12" with a 10 pound sand bag at a 90º angle.
- Cabinet doors are weighted with 65 pounds and operated 10 times to test the ability of the door and hinges to withstand loading.
- Doors are opened and closed for 25,000 cycles to help ensure durability under the stress of normal usage.
- Drawers and drawer mechanisms are tested at 15 pounds per square foot and operated through 25,000 opening and closing cycles to assure durability.
- A 3 pound weight is dropped 10 times against drawer assembly to help ensure that drawer front assembly will withstand the impact of closing.
- Cabinets are hot box tested at temperatures up to 120ºF for 24 hours to help ensure finish will withstand high heat.
- Cabinets are cycle tested at temperatures ranging from -5ºF to +120ºF to help ensure finish will withstand temperature changes.
- A 24-hour soap and water solution test checks finish ability to withstand exposure to detergents and moisture.
- Finish is exposed to vinegar, grape juice, olive oil, lemon juice, 100 proof alcohol and more to help ensure no appreciable discoloration, stain or whitening of the finish.

WARNING: This product can expose you to chemicals including formaldehyde, which is known to the State of California to cause cancer. For more information go to www.P65Warnings.ca.gov.

Table of Contents

What's New 2-4

Index i–viii

Door Styles A1-A124

Finishes B1-B18

Construction Specifications and Options C1–C40
Cabinet Specifications C1–C12
Construction Options C13–C40

Wall Cabinets D1–D60
Wall Cabinets D1–D5
Peninsula Wall Cabinets D6–D7
Wall Corner Cabinets D8–D15
Peninsula Wall Corner Cabinets D16–D17
Wall End Run Cabinets D18–D20
Wall Open Cabinets D21–D23
Wall Microwave Cabinets D24–D27
Wall Hoods D28–D42
Wall Specialty Cabinets D43–D48
Wall Accessories D49–D60

Base Cabinets E1-E66
Base Cabinets E1-E14
Base Appliance Cabinets E15-E19
Base Corner Cabinets E20-E28
Peninsula Base Corner Cabinets E29-E30
Base End Run Cabinets E31-E32
Base Island Cabinets E33-E36
Base Specialty Cabinets E37-E44
Base Accessories E45-E66

Tall Cabinets F1–F34
Tall Cabinets F1–F13
Tall Appliance Cabinets F14–F24
Tall Cabinet Accessories F25–F34

Vanity Cabinets G1-G70
Vanity Cabinets G1-G28
Montrose Collection (S1) G29-G34
Cologne Collection (S2) G35-G40
Bayshore Collection (S3) G41-G46
Prescott Collection (S4) G47-G52
Fairfield Collection (S5) G53-G57
Vanity Accessories G58-G70

Office Cabinets H1–H14
Office Cabinets H1–H6
Office Accessories H7–H14

Furniture Cabinets I1–I16
Bookshelves I1-I5
Wood Tops I6-I7
Furniture Accessories I8–I12
Design Ideas I13–I16

Passport Cabinets J1–J10
Passport Cabinets J1–J7
Passport Accessories J8–J10

Panels–Shelving–Trays K1–K20
Custom Appliance Panels K1–K4
Decorative Appliance Panels K5–K8
Paneling K9–K12
Shelving K13–K18
Roll-out Trays K19–K20

Decorative Doors and Inserts L1–L28
Glass Door Availability Charts L1–L3
Aluminum Frame Glass L4–L7
Camed Glass L8–L10
Classic Glass L11-L13
Etched Glass L14–L15
Layered Glass L16–L18
Mullion Doors L19–L24
Specialty Inserts L25
Textured Glass L26-L28

Decorative Enhancements M1–M52
LED Lighting M1–M3
Supports and Valances M4–M8
Molding M9–M25
Molding Accents M26–M35
Decorative Hardware M36–M52

Replacement Parts N1–N26
Hardware N1–N7
Touch-Up N8–N14
Replacement Parts N15–N26

Nomenclature Index O1–O5

What's New inside your 2017 KraftMaid® Spec Book

New **Watch for this icon highlighting new items**

Watch for grey codes and this note highlighting new models or codes

AC5O1

Grey color coding indicates new product, size or code.

New Product	
Door Styles	**Page**
EverCore™ species expansion on select doors	A Sect.
Chanlott	A20
Jovana	A52
Larken	A56
Trumbull	A110
Finishes	**Page**
Stains in Molasses	B2
Stains w/Suede in Molasses	B5
Premium Stain w/Glaze Suede Topcoat Finishes	B6
Premium Distressed Stain Finishes in Molasses	B7
Premium Burnished Stain w/Suede Topcoat Finishes	B9
Premium Paint w/Suede Topcoat Finishes	B12
Premium Paint w/Glaze Suede Topcoat Finishes	B14
Premium Vintage Paint w/Suede Topcoat Finishes	B16
Premium Splash Palette Paint Finishes	B18
Premium Splash palette Paint w/Suede Finishes	B18
Construction Options	**Page**
Attached Decorative End	C22
Integrated Message Center - Wall	C32
Integrated Message Center - Base	C33
Integrated Message Center - Utility	C33
Integrated Wall Spice Shelf and Open Integrated Storage	C33
Integrated Base Spice Shelf	C33
Integrated Utility Cleaning Storage	C34
Toe Kick Drawer	C39
Wall Cabinets	**Page**
Wall Angle 12" Deep in 21" Wide	D11
Wall - Diagonal Wine Storage Cabinet	D23
Wall - Offset Diagonal Wine Storage Cabinet	D23
Wall Microwave Cabinets in 36" 39", 42", and 45" Heights	D24-D26
Wall Hood Box w/Columns	D33
Wall Hood Box w/Columns w/Extra Large Cove Molding Top Plate	D33
Wall Hood Cabinet Run - Rosette Corbel	D37
Wall Hood Cabinet Run - Sterling Corbel	D38
Wall Hood Cabinet Run - Transitional Corbel	D38
Wall Hood Cabinet Run - Shelf w/Classic Crown Molding	D39
Wall Hood Cabinet Run - Shelf w/Extra Large Cove Molding	D39
Wall Hood Component Package (R)-Vented	D41
Wall Hood Component Package (S)-Vented	D41
Wall Hood Component Package (T)-Vented	D41
Spice Open Storage	D52
Replacement Spice Bottle	D52
Wall Filler 36" and 48" High	D53
Base Cabinets	**Page**
Base Full-Height Single Door - Full Overlay	E2
Base Deep Drawer Combination - Top & Bottom Tray	E8
Sink Base Wastebasket	E10
Deep Sink Base Extended	E12
Apron Sink Base Extended	E12
Apron Sink Base Extended 27" Deep	E12
Deep Range Base	E12
Easy Reach w/Chrome Super Susan	E25
Asymmetrical Easy Reach w/Chrome Super Susan	E26
Island End - Bookcase	E35
Island End - Gateway	E36
Island End - Tapered Leg	E36
Island End - Transitional	E36
Base Offset Diagonal Wine Storage Cabinet	E37
Base Cleaning Storage Cabinet	E39
Base Offset Diagonal Wine Storage Cabinet w/Auto Open	E39
Base Step Stool Cabinet	E41
Base Bottom Mount Wastebaset Single in 30 qt.	E44
Replacement Wastebasket in 30 qt.	E45
Replacement Deluxe Rollout Trays for BDDC Cabinet	E47
Non-Slip Drawer Liner	E49

New Product	
Utensil Drawer Organizer - Angled - Field Install Kit	E53
Spice Caddy	E54
Wood Tiered Drawer Storage Combination or Kit	E54
Multi-Sized Deep Drawer Organizer w/Food Storage	E56
Multi-Sized Deep Drawer Organizer	E56
Deep Drawer Organizer w/Canister Storage	E57
Deep Drawer Organizer w/Tall Canister Storage	E57
Roll-Out Tray Organizer w/Canister Storage	E58
Roll-Out Tray Organizer w/Tall Canister Storage	E58
Deep Drawer Organizer	E59
Roll-Out Tray Organizer	E59
Matching Base End Panel in 40 1/2" High	E64
Matching Base End Panel - Square Edges in 40 1/2" High	E64
Furniture Matching Base End Panel in 40 1/2" High	E64
Matching Base End Panel - Mitered in 40 1/2" High	E65
Tall Cabinets	**Page**
Utility Extended Bottom 12" and 24" Deep	F3
Utility Cleaning Cabinet 24" Deep	F4
Oven Cabinet - Combination w/Bottom Drawer	F19
Vanity Cabinets Cabinets	**Page**
Vanity Combination Drawer (2) in 39" Wide	G8
Vanity Combination Drawer (3) in 39" Wide	G9
Vanity Base Drawer in 30", 33", 36" Wide	G14
Vanity Base Four Drawer in 27", 30", 33", 36" Wide	G14
Non-Slip Drawer Liner	G59
Furniture Cabinets	**Page**
Furniture Book Shelves in 87" and 93" High	I4
Floating Shelf in Cove and Sterling	I8-I9
Passport Cabinets	**Page**
Passport Base Cabinet w/Deluxe Rollout Trays	J2
Passport Base Cabinet w/2 Deluxe Rollout Trays	J2
Panels–Shelving–Trays	**Page**
Replacement Shelving w/Adjustable Shelf Clips for 21" Wall Angle	K15
Replacement Shelving-Walls for Wall Angle 21"	K16
Replacement Shelving-Walls for Integrated Wall Spice Shelf and 21" Wall Angle	K16
Replacement Shelving-Base for Integrated Base Spice Shelf and Multi-Storage Pantry	K17
Decorative Doors and Inserts	**Page**
NEW glass availabity for Top, Bottom, Ends, Both On select inserts and sizes	L Sect.
Decorative Enhancements	**Page**
DayBreak Dimmable Driver-LED Power Supply in 40 watts	M3
Empire Crown Molding and Large Empire Crown Molding	M11
Floating Shelf Molding in Cove and Sterling	M13
Empire Starter Molding	M14
Empire Light Rail	M15
Wide Scribe Molding	M19
Cove Baseboard Extended	M22
Empire Corbel	M29
Rosette Corbel in 38"	M29
Sterling Corbel in 8"	M30
Transitional Corbel in 8"	M30
Empire Leg	M31
Replacement Parts	**Page**
Replacement Runners for Toe Kick Drawer	N2
Whisper Touch™ Hinges Full-Overlay for B6_FO	N5
Touch-up for new finishes	N9-N14

What's Changed

Door Section now includes finish chart availability
Door Section now includes more detailed door images
Replacement Parts Cabinet Relations has been moved from the Replacement section in the spcifications book and placed online where the specification books are located to download.

What's Discontinued

Door Styles
Astoria, all species
Bradford, all species
Bridgewater, all styles and species
Chadwick, all species
Harlowe, all species
Northwicke, all species
Smithton, all species

Finishes
Antique chocolate w/Mocha Glaze
Cardinal
Golden Lager
Chocolate w/Mocha Glaze
Coconut Glaze
Sage
Toffee

Construction Options
Contrasting Back Option-V-Groove Back
Decorative Wide Rail Options in Arch No Fret and Victorian

Wall Cabinets
Wall Double Panel Cabinets in 54" H
Wall Angle Tambour Cabinets
Wall Angle Drawer Cabinets
Wall Corner Angle Double Panel Cabinets 54" H
Wall Z-Angle Cabinets
Wall End Open Shelf
Wall China Display in 18" W, 42" W, and 48" W
Wall Microwave Cabinet in 36" H and 45" H
Wall Microwave Cabinet Extended Opening in 36" H and 45" H non-Butt
Wall Microwave Shelf Cabinet in 36" and 45" non-Butt
Wall Microwave w/Sold Wood Shelf Cabinet in 36" H and 45" H non-Butt
Wall Hood Classic Chimney cabinets in Beaded Panel
Wall Hood Classic Artisan Chimney
Peninsula Wall Hood Classic Artisan Chimney
Wall Hood Box Valance in Furniture Valance
Wall Hood Mantle Cabinet in 21" W, and 24" W
Under Cabinet Open Storage Cabinets
Wall Tambour Cabinets
Dovetail Spice Drawer Cabinet
Wall Inside Corner Angle Filler in 57" H and 60" H
Wall Inside Corner Angle Filler Overlay in 57" H and 60" H
End Panels for Double Panel & Stack

Base Cabinets
Base Cabinets w/Tray(s)
Base Cabinets w/Full-Width Tray(s)
Base Flat Storage Cabinets
Glass Front Drawer Cabinets
Base Pots and Pans Storage-Clipped and Fluted Clipped Corners Cabinets
Base Multi-Storage Drawer Cabinets
Wood Sink Base Cabinets in 30" W, 36" W non-Butt
Apron Sink Base Cabinets 24" D and 27" D
Deep Range Base Cabinets
Base Corner Fixed Shelf Cabinets
Base Drawer Angle Cabinets
Base Z-Angle Cabinets
Base End Open Shelf in 12" D and 24" D Cabinets
Island End Cabinets
Base Decorative End Cabinets
Island End Cap Cabinets in Plain Square Post
Island End Cap Open with False Drawers
Dovetailed Base Spice Drawer Cabinet
Base Super Storage Cabinets
Baking Station Base Cabinets
Base Drawer Buffet Cabinets
Base Top Mount Wastebasket in Single, Double, Full-Height and Recycling Center

Tall Cabinets
Utility Roll-Out Tray
Oven Cabinet-Single w/3" Stiles in 39" W
Oven Cabinet-Single w/3" Stiles-Two Bottom Drawers in 24" W and 39" W
Oven Cabinets-Double w/3" Stiles-Deep Drawer in 24" W
Oven Cabinet-Double Extended Opening w/3" Stiles in 24" W
Tall Inside Corner Angle Filler
Tall Inside Corner Angle Filler Overlay

Vanity Cabinets
Vanity Linen Tambour Cabinets
Vanity Mirror Cabinet Open
Framed Mirror-Large Federal
Vanity Top Plates-in Angle Crown, Classic, Cove, Crown, Federal, Large Crown, and Traditional
Vanity Decorative Skirt

Furniture Cabinets
Furniture Book Shelf in 21" D
Furniture Base and Wall 84" H, 90" H, and 96" H
Furniture Base Wall Top 84" H, 90" H, and 96" H
Furniture Base in 21" D
Furniture Base Drawer in 84" H, 90" H, and 96" H

What's Discontinued

Passport Cabinets
Passport Base w/Full-Width Tray
Passport Base w/Two Full-Width Trays
Passport Base Double Door w/Two Trays
Passport Base Double Door w/Four Trays
Passport Base End Open Shelf
Passport Peninsula Base End Open Shelf
Passport Base Tambour
Passport Wood Paneling

Panels-Shelving-Trays
Contrasting Wood Veneer Paneling
Contrasting Beaded Paneling
Contrasting V-Groove Paneling
Acrylic Shelf Kits
Acrylic Shelf Kits w/Clips
Replacement Shelving-walls for Z Angle Cabinets
Replacement Shelving-Base for Base Island End Cabinets and Z-Angle Cabinets
Deep Roll-out Trays Factory Installed and Field Installation
Roll-out Trays Factory Installed and Field Installation
Roll-out Shelf Kit Field Installation
High Back Roll-Out Trays Factory Installed and Field Installed
Roll-Out Tray Divided Kit Field Install in 21" and 18"

Decorative Door and Inserts
Vetro Champagne and Hammered Bronze
Estate Camed Insert
Tangiers Insert
Villa Insert
Antique Mirage Insert
Burlap Insert
Mullion Doors w/Antique Mirage Glass, Cognac Leather and Onyx Leather inserts
Ballantine
Brockport
Estate Mullion
Oxford Mullion
West Pointe
Wave Insert

Decorative Enhancements
Valance Scalloped
Valance Victorian
Valance Estate
Plate Rail
Spindle Rail
Traditional Wood Edge-BEOS
Ogee Pilaster in OGP3
Bead Pilaster in SBP3 and TBP3
Mission Single Bead Pilaster in MSBP3
Cove Base Board
End Block Capital
End Spindle Capital
Post Molding
Swirl Insert
Aztec Insert
Cove Ornament
Estate Ornament
Modern Ornament
Timeless Ornament
Estate Onlay
Grape Onlay
Grape Corbel
Medium Squat Leg
Split Decorative Posts in 42
Split Spindels in 42
Solid Brass Bronze Finish Knob
Empire Knobs and Pulls in Brushed Bronze
Crescent Pull in Antique Nickel, Brushed Bronze, Polished Nickel, and Statuary Bronze
Cove Wood Knob

Hardware
ROT Mounting Block Kit
Sidemount Drawer Runners

Notes

KraftMaid®
KITCHENS FOR THE **REAL** LIVING ROOM®

Designer Support & Customer Care Guidelines

At KraftMaid Cabinetry, we're committed to providing you with the very best service from start to finish. We're always here to help.

Care and Contact

Contacting Customer Care:
Phone – (888) 562-3460
Fax – (888) 562-6493

Hours of Operation:
Monday through Friday – 8 a.m. to 8 p.m. EST
Saturday – 8 a.m. to 5 p.m. EST
Sunday – Closed

Contact Customer Care With Questions or Concerns Associated With:

- Product availability
- Warranty claims
- Order status
- Paperless Ordering support
- Technical issues

Contact Your KraftMaid Account Manager with Questions Concerning:

- Display Requests
- Literature Replenishment
- Service issue resolution
- Warranty claims outside of 90 days
- Design questions
- Promotional Inquiries

Ordering Process

Paperless Ordering:

- Paperless orders are submitted through **www.KraftMaidinfo.com**.
- The design must be converted to an MCE file before uploading through the Send an Order option in the Customer Care drop down potion of the website.
- Consult **www.KraftMaidinfo.com** for a video tutorial and documents on how to trouble shoot Paperless Ordering, or contact **paperlessorderingsupport@mascocabinetry.com**.

Faxed Orders:

- Must include: account number, Purchase Order number, door styles, wood species, finish, door profile, and any other details pertinent to your order. There should be only one door style and finish on each Purchase Order.
- Orders are first come, first served- most orders are entered within 48 business hours of receipt or less.
- Faxed orders require the use of our order form, which can be located on **www.KraftMaidinfo.com**.

KraftMaid®
KITCHENS FOR THE **REAL** LIVING ROOM®

Order Confirmation:

Paperless Ordering:

- You will immediately receive an order acknowledgment with the invoice number. Should we have a question or discrepancy with your order, you will receive a notification that we have received your order and request that you contact Customer Care at your earliest convenience to resolve.

Faxed Orders:

- Once an order has been received, a faxed or emailed confirmation will follow approximately 2 business days later.

Monitoring Your Order:

- Open Order Reports are faxed twice a week to all stores (Tuesday and Thursday evenings) detailing all open orders for that account, regardless of whether they are in production or not.
- You can check the status of an order at any time by logging into **www.KraftMaidinfo.com** and going to the **My Orders** portion of the **Customer Care** dropdown menu.

KMInfo User Name: _____

KMInfo Password: _____

Canceling an Order:

- Cancellations can be requested but are subject to approval from Customer Care.

How to Handle Warranty Claims:

- Damage – if you or a customer received the product and the packaging is visibly damaged, request that the driver open the package. If damage is discovered, you or your customer are then responsible for contacting Customer Care.
- Missing – if an item is on the bill of lading but was not delivered, you will need to process a replacement part order as soon as that shortage is noticed. If you have questions on the replacement part process for missing parts, please contact Customer Care.
- A faxed acknowledgement will be sent for replacement part orders.
- All damage, missing or error claims must be made within 90 days of receipt of the product.

Delivery

Delivery Process

Store or Warehouse Delivery:

- Within 48 hours of order entry, our scheduling team will arrange the delivery date. You can check your Open Order Report to confirm this timing, or visit www.KraftMaidinfo.com to access delivery and shipping information.

End Customer Delivery:

- A home delivery fee is applied to each invoice as an additional cost on all orders that go directly to a customer.
- The contact on the order will receive a phone call within 48 business hours of their order being entered to set up the delivery date. One to five days prior to the delivery date, a delivery time window will be provided.



As long as they own it, we warrant it. KraftMaid® cabinetry isn't just a purchase, it's an investment. We believe in quality craftsmanship. We also believe that quality craftsmanship should last a lifetime, not just a set number of years. Simply put, your customer's investment is protected as long as they own it. If you have a customer with a warranty issue, please direct them to Customer Care at (888) 562-7744.

ITEM	PAGE
1	
135° Base Inside Angle Corner Cabinet	E28
135° Base Outside Angle Corner Cabinet	E28
135° Wall Inside Angle Corner Cabinet	D11
135° Wall Outside Angle Corner Cabinet	D11
8	
8' Power Cable - LED Connectors	M2
8' Power Extension Cable	M2
A	
Acanthus Corbel	M28
Acanthus Insert	M26
Acanthus Onlay	M28
Adjustable Drawer Dividers	E48
Adjustable Drawer Dividers	I10
Adjustable Shelf Clips	N3
Aerosol Can	N9
Aged Bronze Knob	M40
Aged Bronze Pull	M40
Aged Pewter Beaded Knob With Backplate	M41
Aged Pewter Beaded Pull	M41
All Plywood Construction with 1/2" End Panels	C14
All Plywood Construction with 3/4" (Furniture) End Panels	C14
Aluminum Integrated Angled Pull	M38
Aluminum Integrated Pull	M38
Aluminum Round Bar Pull	M38
Aluminum Round Leg	M30
Ambry	L19
Angle Crown Molding	M10
Angle Crown Molding–Face-Mount	M10
Angled Corner Molding	M18
Angled Wood Edge	M20
Angled Wood Tops	I6
Antique Knob	M39
Antique Pull	M39
Antiquity Insert	L16
Apple Leg	M32
Apron Sink Base Extended	E12
Apron Sink Base Extended 27" Deep	E12
Asymmetrical Easy Reach	E26
Asymmetrical Easy Reach w/Chrome Super Susan	E26
Asymmetrical Easy Reach Wood Super Susan	E26
Asymmetrical Wall Easy Reach	D15
Attached Decorative End (Factory Applied Replacement Doors)	C22
B	
Back Option	C18
Baluster Knob	M46
Baluster Pull	M46
Bar Pull	M43
Base - Offset Diagonal Wine Storage Cabinet	E37
Base Angle	E24
Base Angle Full-Height Door	E24
Base Blind Corner	E21
Base Blind Corner Universal	E21
Base Blind Corner w/Chrome Swing-out	E22
Base Blind Corner w/Wood Lazy Susan	E21
Base Blind Corner w/Wood Swing-out	E22
Base Blind Corner Wood Lazy Susan Kit	E47
Base Bottom Mount Wastebasket–Double	E44
Base Bottom Mount Wastebasket–Double w/Auto-open Kit	E44
Base Bottom Mount Wastebasket–Single	E44
Base Bottom Mount Wastebasket–Single w/Auto-open Kit	E44
Base Box	E61
Base Built-in Microwave Cabinet	E18
Base Cleaning Storage Cabinet	E39
Base Cleaning Storage Cabinet w/Auto-Open	E39
Base Column	E62
Base Cooking Center	E42
Base Cookware Storage Roll-out Field Installation	E46
Base Corner Angle	E31
Base Corner Drawer Cabinet	E27
Base Corner Smart Space Cabinet	E27
Base Deep Drawer Combination	E8
Base Deep Drawer Combination - Top & Bottom Tray	E8
Base Dishwasher Cabinet	E19
Base Double Door	E1
Base Double Door Double Drawer	E1
Base Double Door w/Deluxe Dovetailed Full-Width Tray(s)	E2
Base End Angle	E31
Base End Corner	E31
Base End Panel	E63
Base End Panel w/Stile	E63
Base Filler	E59
Base Filler Overlay	E59
Base Filler Pull-out	E38
Base Fluted Column	E62
Base Fluted Filler	E60
Base Four Drawer	E6
Base Full-Height Double Door	E3
Base Full-Height Double Door 12" Deep	E3
Base Full-Height Single Door	E3
Base Full-Height Single Door - Full Overlay	E2
Base Full-Height Single Door 12" Deep	E3
Base Full-Height Single Door w/Tray Divider	E2
Base Inside Corner Angle Filler	E59
Base Inside Corner Angle Filler Overlay	E60
Base Liter Bottle	E40
Base Message Center	E32
Base Microwave Cabinet 34 1/2" H w/Bottom Drawer–Extended Opening	E17
Base Microwave Cabinet 34 1/2" H w/Deep Bottom Drawer	E17
Base Microwave Cabinet 46 1/2" H	E17
Base Microwave Cabinet 46 1/2" H w/Drawers–Extended Opening	E18
Base Microwave Cabinet 46 1/2" H–Extended Opening	E18
Base Microwave Drawer	E18
Base Mixer Shelf	E42
Base Multi-Storage Pantry	E41
Base Oven Cabinet Universal	E15
Base Pantry Pull-out	E38
Base Pantry Pull-out Utensil Storage	E40
Base Pots and Pans Organizer Roll-out Field Installation	E46
Base Pots and Pans Storage Four Drawer	E7
Base Pots and Pans Storage Three Drawer	E7
Base Pots and Pans Storage Two Drawer	E7
Base Single Door	E1
Base Single Door w/Deluxe Dovetailed Full-Width Tray(s)	E2
Base Spice Drawer Cabinet	E41
Base Step Stool Cabinet	E41
Base Three Drawer	E6
Base Top Mount Wastebasket–Double Sidemount Soft-Close	E43
Base Top Mount Wastebasket–Full-Height Sidemount Soft-Close	E43
Base Top Mount Wastebasket–Recycling Center Sidemount Soft-Close	E43
Base Top Mount Wastebasket–Single Sidemount Soft-Close	E43
Base Tray Pull-out	E38
Base Utensil Pull-Out	E40
Base w/Pots and Pans Organizer	E42
Base Wine Rack	E37
Batten Molding	M16
Bead Edging	M19
Bead Molding	M21
Bead Pilaster	M22
Beaded Light Rail	M15
Beaded Panel Molding	M16
Beaded Paneling	K10
Bistro Insert	L11
Bread Box Drawer	E7
Bread Box or Kit	E50
Brushed Brass Tapered Bow Pull	M37
Brushed Brass Tapered Knob	M37
C	
Cabinet Care Kit	N8
Cabinet Front Only	C28
Cabinet Panel Edge	M17
Cabinet Valance Options	C30
Cascade Insert	L26
Castlegate	L20
Center Beaded Insert	M26
Center Rail Cutout	K3
Chair Rail	M23
Chalkboard Insert	L25
Change Height	C24
Change Width	C23
Change Width & Change Height	C26
Change Width & Increase Depth	C24
Change Width & Reduce Depth	C24
Change Width, Increase Depth & Change Height	C27
Change Width, Reduce Depth & Change Height	C27
Charging Drawer	E55
Chateau Insert	L8
Chopping Block or Kit	E52

ITEM	PAGE
Chopping Block or Kit	E52
Chrome Deluxe Roll-out Tray Factory Installed	K18
Chrome Lazy Susan Kit for Wall Angle Cabinets	D51
Classic Camed Insert	L8
Classic Crown Molding	M11
Classic Crown Molding w/Molding Mounting Strip	M11
Classic Drawer Front	C36
Classic Leg	M31
Clipped Corner Wood Tops	I7
Computer Keyboard Drawer Cabinet	H5
Computer Keyboard Drawer Kit	H8
Connector Kit for Custom Wire Length	M2
Console Vanity	G5
Console Vanity Deluxe Roll-Out Tray	G5
Contemporary Wood Crown	M13
Contemporary Wood Edge	M20
Contemporary Wood Tops	I6
Contrasting Back Option–Beaded Back	C19
Contrasting Back Option–Leather Back	C20
Contrasting Back Option–Plain Back	C18
CoreGuard® Panel Backer	K12
CoreGuard® Sink Base	E8
CoreGuard® Vanity	G11
Corner Molding	M18
Corner Molding	M18
Corner Tall End Panel	F32
Corner Tall Molding	M23
Countertop Support	M4
Cove Base Board Extended	M22
Cove Casing	M24
Cove Casing	M24
Cove Corbel	M29
Cove Leg	M32
Cove Light Rail	M15
Cove Molding	M12
Cove Molding w/Molding Mounting Strip	M12
Crescent Knob	M45
Crescent Pull	M46
Crossroads Insert	L14
Crown Molding	M10
Crown Molding w/Molding Mounting Strip	M10
Crown Molding w/Molding Mounting Strip	M10
Cultured Marble Top	G7
Custom Appliance Panel-Frame Only	K3
Custom Appliance Panel–Door Onlay Panel	K2
Custom Appliance Panel–Door Onlay Panel with Custom Center Rail	K2
Custom Appliance Panel–Drawer Onlay Panel	K4
Cutlery Divider or Kit	E53
Cutlery Divider or Kit	E53
Cutting Board Door Rack Kit	E52
Cutting Board Finish	N8
Cutting Center or Kit	E51

D

DayBreak Dimmable Driver - LED Power Supply	M3
Decorative Accent End Panel	E64
Decorative Island End Cap Legs	M33
Decorative Leg	M31
Decorative Panel–Back Panel	K6
Decorative Panel–Door Onlay Panel and Hinge Doors	K6
Decorative Panel–Drawer Onlay Panel	K7
Decorative Panel–Wainscot	K8
Decorative Posts	M33
Decorative Wide Rail Options	C31
Deep Drawer Organizer	E59
Deep Drawer Organizer w/Canister Storage and Deep Drawer Organizer w/Tall Canister Storage	E57
Deep Range Base	E16
Deep Sink Base	E11
Deep Sink Base 27″ Deep	E12
Deep Sink Base Extended	E12
Deluxe Dovetailed Roll-out Tray Factory Installed	K17
Deluxe Raised or Recessed Panel Drawer Front	C35
Deluxe Roll-out Tray Extension Tail	N3
Dentil Edging	M17
Dentil Insert	M26
Dentil Molding	M21
Desk Box	H10
Desk Column	H10
Desk Door Cabinet–Double Door	H2
Desk Door Cabinet–Single Door	H2
Desk Double File Drawer	H3
Desk Drawer Cabinet	H2
Desk Easy Reach	H6
Desk End Panel	H11
Desk File Drawer Cabinet	H3
Desk Filler	H8
Desk Filler Overlay	H8
Desk Fluted Column	H10
Desk Fluted Filler	H8
Desk Full-Height Door	H2
Desk Knee Drawer Cabinet	H5
Desk Multi-Storage Drawer Cabinet	H3
Desk Wastebasket	H4
Desk Wastebasket w/Soft-Close Runners	H4
Diagonal Wine Storage Cabinet	D23
Dishwasher Panel	E19
Dishwasher Raised Panel	E19
Distressed French Lace Knob	M42
Distressed French Lace Pull	M43
Dolace Insert	L26
Door Insert Clips	N4
Door Stop Kit	N3
Door Storage	D43
Door Storage Angle	D44
Double Oven Opening Kit	F25
Down Draft Base	E16
Drawer Partition	E49
Drawer Storage Angle	D44
Drawer Storage Cabinet	D44
Drop-in Range Panel	E17

E

Easy Reach	E25
Easy Reach w/Chrome Super Susan	E25
Easy Reach Wood Super Susan	E25
Egg and Dart Edge	M27
Empire Corbel	M29
Empire Crown Molding	M11
Empire Knob	M44
Empire Leg	M31
Empire Light Rail	M15
Empire Pull	M45
Empire Square Knob	M44
Empire Starter Molding	M14
End-to-End Connector	M2
Evansville	L20
Extended Stile	C31

F

Fabric Care Ensemble	F23
Fabric Care Ensemble Cabinet	F24
Fabric Care Ensemble Panels	F24
False Front Clips	N4
Federal Knob	M49
Federal Leg	M31
Federal Molding	M13
Federal Pull	M49
Fill Stick	N14
Filler Extension	D56, E61, H9
Finger Pull Routing	C36
Finished End Wood Tops	I7
Flat Framed Beveled Mirror	G26
Floating Shelf Cove Molding	M13
Floating Shelf Sterling Molding	M13
Floating Shelves	I8
Floating Shelves - Cove	I8
Floating Shelves - Sterling	I9
Flush Finished Blind	D10
Fluted Extended Stile	C32
Fluted Filler Extension	D56, E61, H10
Fluted Integrated Extended Stile - Base	C34
Fluted Leg	M32
Fluted Square Posts	M34
Food Container Insert	E56
Fordham Bin Pull	M50
Fordham Knob	M49
Framed Mirror w/Decorative Accents Bayshore Collection (S3)	G45
Framed Mirror w/Decorative Accents Cologne Collection (S2)	G39
Framed Mirror w/Decorative Accents Montrose Collection (S1)	G33
Framed Mirror w/Decorative Accents Prescott Collection (S4)	G51
Framed Mirror–Angle Crown	G26
Framed Mirror–Classic	G26
Framed Mirror–Large Cove	G27
Framed Mirror–Large Crown	G27
Framed Mirror–Traditional	G27
French Farm Cup Pull	M43
French Farm Pull	M44

ITEM	PAGE
French Farm Round Knob	M43
French Leg	M33
Fresco Brushed Aluminum	L4, L5
Front Shelf Clips	N4
Full Extension Drawer Runner	N3
Full-Height Doors	C35
Furniture Base 84" and 90" H	I5
Furniture Base 96" H	I5
Furniture Book Shelf-84" and 90" H	I4
Furniture Book Shelf–93" and 96" H	I4
Furniture Book Shelf–Top	I3
Furniture Drawer 12" H	I9
Furniture Drawer 6" H	I9
Furniture End Panels	I10
Furniture Matching Base End Panel	E64
Furniture Matching Desk End Panel	H12
Furniture Matching Tall End Panel	F32
Furniture Matching Tall Vanity End Panel	G66
Furniture Matching Vanity End Panel	G65
Furniture Matching Wall End Panel	D59
Furniture Panels	I12
Furniture Plywood Ends	C14
Furniture Shelf Rests	N4
Furniture Shelves	I11
Furniture Wall	I1
Furniture Wall Top	I2

G

Glass Door Inserts	C35
Glass Insert Retainer Strip	N5
Glass Shelf Kit w/Adjustable Shelf Clips	K15
Glass Shelf Kits	K14
Glass Shelf Rests	N4

H

Hamper Kit	G60
Hardware Screws	N5
Heat Shield	E15
Heirloom Knob	M47
Heirloom Pull	M48
Heritage Knob	M47
Heritage Pull	M47
Hewitt	L21
Hinges–Bifold	N7
Hinges–Partial Or Full Overlay Easy Reach	N6
Hinges–Partial Overlay Concealed	N6

I

Increase Depth & Change Height	C26
Increased Depth	C23
Inset Light Rail	M15
Installation Screws	N5
Integrated Base Message Center	C33
Integrated Base Spice Shelf	C34
Integrated Decorative End	C20
Integrated Extended Stile	C32
Integrated Message Center Utility	C33
Integrated Utility Cleaning Storage	C34
Integrated Wall Message Center	C33
Integrated Wall Spice Shelf and Open Integrated Storage	C33
Inverted Frame	C28
Island End - Bookcase	E35
Island End - Gateway	E36
Island End - Tapered Leg	E36
Island End - Transitional	E36
Island End Cap Open with False Doors	E35
Island End Cap with Doors	E33
Island End Cap with Drawers	E34
Ivy Insert	M27

J

Jericho Knob	M50
Jericho Pull	M50

K

K-Cup® Drawer Organizer Kit-Field Installation	E49
K-Cup® Shelf Kit	D51
Knee Drawer Divider or Kit	H7
Knife Hinges	N6
Knife Section Cutting Center or Kit	E52
Knife Section or Kit	E51

L

Large Empire Crown Molding	M11
Lattice Wall	D22
Lattice Wall Cabinet	D22
Lazy Susan End Panel	E23
Leather Inserts	L25
LED Connectors	M1
LED Flexible Strip Tape Light - LED Light Sources	M1
LED Light Sources	M1
LED Power Supply	M2
LED Puck Light	M1
LED Switches	M3
Library Molding	M24
Lighted Tri View Mirror	G26
Lisbon Insert	L14
Low Voltage LED Wall Dimmer Switch	M3

M

Matching Base End Panel	E64
Matching Base End Panel–Mitered	E65
Matching Base End Panel–Square Edges	E64
Matching Desk End Panel	H12
Matching Desk End Panel–Mitered	H12
Matching Desk End Panel–Square Edges	H12
Matching Interior Standard Construction–Viraguard	C14
Matching Interior with 1/2" Plywood End Panels	C15
Matching Interior with 3/4" (Furniture) End Panels on All Plywood (APC) Orders	C15
Matching Interior with 3/4" Furniture Plywood End Panels	C15
Matching Tall End Panel	F31
Matching Tall End Panel–Mitered	F32
Matching Tall End Panel–Square Edges	F32
Matching Tall Vanity End Panel	G66
Matching Tall Vanity End Panel–Mitered	G67
Matching Tall Vanity End Panel–Square Edges	G66
Matching Vanity End Panel	G65
Matching Vanity End Panel–Mitered	G66
Matching Vanity End Panel–Square Edges	G65
Matching Wall End Panel	D58
Matching Wall End Panel–Square Edges	D59
Matte Nickel Knob	M36
Medium Football Knob	M36
Microwave Cooking Center	F20
Microwave Cooking Center w/Drawer Storage	F21
Microwave Cooking Center w/Drawer Storage–Extended Opening	F22
Microwave Cooking Center–Extended Opening	F21
Microwave Kit–Compact	E19
Mirage Insert	L17
Mirror Cabinet–Recessed Mount	G24
Mirror Cabinet–Surface Mount	G24
Mirror Molding	M17
Mission Angle Support	M4
Mission Batten Molding	M16
Mission Countertop Support	M4
Mission Flat Wood Edge	M20
Mission Light Rail	M15
Mission Outside Corner	M18
Mission Scribe Molding	M19
Mission Shelf Support Bracket	M4
Mission Single Bead Edging	M19
Mission Single Bead Molding	M22
Mission Single Bead Pilaster	M22
Mission Single Bead Wood Edge	M20
Mission Starter Molding	M14
Mode Knob	M50
Mode Pull	M50
Modern Casing	M24
Modern Cup Pull	M48
Modern Frosted Insert	L14
Modern Pull	M48
Modern Textured Insert	L27
Moire Insert	L27
Molding Mounting Strip	M12
Motion Sensor On/Off Switch - LED Switches	M3
Multi-Sized Deep Drawer Organizer w/Food Storage and Multi-Sized Deep Drawer Organizer	E56
Mullion Strip Base–Void Center Stile	C28
Mullion Strip Oven Cabinet–Void Center Stile	C29
Mullion Strip Peninsula Base–Void Center Stile	C29
Mullion Strip Utility Bottom–Void Center Stile	C29
Mullion Strip Utility Top–Void Center Stile	C29
Mullion Strip Wall–Void Center Stile	C28
Multi Storage Pantry 24" Wide	F10
Multi Storage Pantry 36" Wide	F10

ITEM	PAGE
N	
Non-slip Drawer Liner	E49, G59
O	
Offset Diagonal Wine Storage Cabinet	D23
Ogee Edging	M17
Ogee Molding	M21
Ogee Pilaster	M21
Oil Rubbed Bronze Pull	M37
Olive Leaf Corbel	M29
Olive Leaf Knob	M41
Olive Leaf Molding	M27
Olive Leaf Onlay	M28
Olive Leaf Pull	M41
Operational End	C21
Organizer Wall Cabinet	H1
Organizers	D48, H1
Oval Rosette	M28
Oven Cabinet-Combination w/Bottom Drawer	F19
Oven Cabinet–Combination w/3" Stiles	F19
Oven Cabinet–Double Extended Opening w/3" Stiles	F18
Oven Cabinet–Double w/3" Stiles	F16
Oven Cabinet–Double w/3" Stiles–Deep Drawer	F17
Oven Cabinet–Single Oven/Microwave Combination w/3" Stiles–Bottom Drawer	F15
Oven Cabinet–Single w/3" Stiles	F14
Oven Cabinet–Single w/3" Stiles–Two Bottom Drawers	F15
Oven Cabinet–Single w/3" Stiles–Two Bottom Drawers	F19
Oven Cabinet–Universal	F20
Oven Trim Kit	F25
Overlay Panel For Base Blind Corner Cabinets	E65
Overlay Panel For Wall Blind Corner Cabinets	D59
P	
Paint	N10
Palisades Insert	L9
Palladia	L21
Pantry Storage	F10
Paper Towel Holder	D50
Passport Base Blind Corner w/Pull-out	J4
Passport Base Cabinet w/2 Deluxe Rollout Trays	J2
Passport Base Cabinet w/Deluxe Rollout Trays	J2
Passport Base Dishwasher Cabinet	J4
Passport Base End Corner	J5
Passport Base End Panel w/Stile	J8
Passport Base Filler	J8
Passport Base Microwave	J4
Passport Base Pantry Pull-out	J2
Passport Base Pull-out Table	J6
Passport Base Single Door w/Tray Divider	J2
Passport Base Skin	J8
Passport Base Three Drawer	J3
Passport Base Three Drawer w/Cutting Center	J3
Passport Base Two Drawer	J2
Passport Base Wastebasket	J6
Passport Lazy Susan	J5
Passport Lazy Susan End Panel	J9
Passport Matching Toe Kick	J9
Passport Peninsula Base Blind Corner	J5
Passport Peninsula Base Blind Corner w/Pull-out	J5
Passport Peninsula Solid Wood Base End Open Shelf	J6
Passport Plumbing Skirt	J4
Passport Single Oven Cabinet w/3" Stiles	J7
Passport Sink Base	J3
Passport Sink Collar	J4
Passport Sink Front	J3
Passport Solid Wood Base End Open Shelf	J5
Passport Tall Filler	J8
Passport Utility Cabinets 12" Deep	J6
Passport Utility Cabinets 24" Deep	J6
Pearl Beaded Knob	M45
Pearl Beaded Pull	M45
Pedestal Drawer	E42
Pegged Drawer Organizer	E55
Peninsula Base Angle Cabinet	E30
Peninsula Base Blind Corner	E22
Peninsula Base Blind Corner–27" Wide	E23
Peninsula Base Double Door	E4
Peninsula Base Full-Height Double Door	E5
Peninsula Base Full-Height Double Door 12" Deep	E6
Peninsula Base Full-Height Single Door	E4
Peninsula Base Full-Height Single Door 12" Deep	E5
Peninsula Base Full-Height Single Door w/Tray Divider	E4
Peninsula Base Single Door	E4
Peninsula Easy Reach	E29
Peninsula Easy Reach Wood Super Susan	E29
Peninsula Wall Angle	D16
Peninsula Wall Angle Wood Lazy Susan	D17
Peninsula Wall Blind Corner	D10
Peninsula Wall Double Door	D7
Peninsula Wall Easy Reach	D17
Peninsula Wall Hood Classic	D28
Peninsula Wall Hood Classic Chimney	D30
Peninsula Wall Hood Classic Chimney Flat Panel Valance	D31
Peninsula Wall Hood Classic Chimney Raised Panel Valance	D32
Peninsula Wall Hood Matching	D29
Peninsula Wall Single Door	D6
Penrose Insert	L9
Permaset Bumpers	N5
Pewter Domed Ring Knob	M40
Pewter Ringed Pull	M40
Plain Capital Base Fluted Column	E63
Plain Capital Base Fluted Filler	E60
Plain Capital Desk Fluted Column	H11
Plain Capital Desk Fluted Filler	H9
Plain Capital Sterling Base Column	E62
Plain Capital Sterling Vanity Column	G64
Plain Capital Tall Fluted Column	F29
Plain Capital Tall Fluted Filler	F27
Plain Capital Vanity Fluted Column	G64
Plain Capital Vanity Fluted Filler	G62
Plain Capital Wall Fluted Column	D57
Plain Capital Wall Fluted Filler	D55
Plain Square Posts	M34
Plywood Ends	C13
Polish	N8
Portrait Framed Mirror–Classic	G27
Portrait Framed Mirror–Cove	G28
Portrait Framed Mirror–Federal	G28
Portrait Framed Mirror–Traditional	G28
Prairie Insert	L15
Prep for Warming Drawer	C37
Prepared for Glass	L12
Prism Insert	L13
Pull-out Table Kit	E50
Q	
Quarter Round Molding	M18
R	
Raleigh	L22
Range Base	E16
Range Base 27" Deep	E16
Ravenna Insert	L27
Recessed Toe Kick	C38
Recessed Toe Kick Peninsula	C38
Reduce Depth & Change Height	C25
Reduced Depth	C23
Refrigerator End Panel w/Stile	F31
Refrigerator End Panel w/Stile	F31
Refrigerator Tall Cabinet	F23
Replacement Deluxe Rollout Trays for BDDC Cabinet	E47
Replacement Runners for Toe Kick Drawer	N2
Replacement Shelving w/Adjustable Shelf Clips	K15
Replacement Shelving–Base	K15
Replacement Shelving–Vanity	K16
Replacement Shelving–Walls	K14
Replacement Spice Bottle	D52
Replacement Wastebasket	E45, H7
Reverse-A-Shelf Kit	D53
Ribbon Twist Molding	M19
Roll-Out Tray Organizer	E59
Roll-out Tray Divided Kit Field Installation	K18
Roll-Out Tray Organizer w/Canisters and Roll-Out Tray Organizer w/Tall Canisters	E58
Roman Spindles	M35
Rope Molding	M18
Rosette	M27
Rosette Base Fluted Column	E63
Rosette Base Fluted Filler	E60
Rosette Base Fluted Filler Overlay	E61
Rosette Corbel	M29
Rosette Desk Fluted Column	H11
Rosette Desk Fluted Filler	H9
Rosette Desk Fluted Filler Overlay	H9
Rosette Tall Fluted Column	F29

ITEM	PAGE
Rosette Tall Fluted Filler	F28
Rosette Tall Fluted Filler Overlay	F28
Rosette Vanity Fluted Column	G64
Rosette Vanity Fluted Filler	G62
Rosette Vanity Fluted Filler Overlay	G62
Rosette Wall Fluted Column	D58
Rosette Wall Fluted Filler	D55
Rosette Wall Fluted Filler Overlay	D55
Round Knob	M42

S

Sail Knob	M47
Sail Pull	M47
Satin Chrome 5" Center Pull	M36
Satin Nickel Dog Bone Pull	M38
Satin Nickel Dog Bone Pull	M38
Satin Nickel Knob	M37
Satin Nickel Tapered Bow Pull	M37
Satina Insert	L15
Scoop Top Drawer	C37
Scribe Molding	M19
Shadow Insert	L13
Shaped Molding	M16
Shelf Clips	N3
Shelf Kits	K13
Shelf Support Bracket	M5
Shoe Molding	M20
Showcase Mullion	L22
Silk Insert	L17
Simplicity Knob	M48
Simplicity Pull	M48
Sink Base Angle	E14
Sink Base Blind Corner	E13
Sink Base Door Storage Unit or Kit	E55
Sink Base Drawer	E11
Sink Base Multi-Storage Cabinet	E11
Sink Base Multi-Storage Shelf Kit	E50
Sink Base Plastic Bag Door Storage Unit or Kit	E55
Sink Base Shallow Deluxe Roll-out Tray-Field Installation	E47
Sink Base U-Shaped Deluxe Roll-out Tray-Field Installation	E47
Sink Base w/Roll-Out Trays	E10
Sink Base w/Roll-Out Trays and Utensil Tray	E10
Sink Base Wastebasket	E10
Sink Base–Clipped and Fluted Clipped Corners	E11
Sink Front	E13
Sink Front Angle	E14
Sink Front Corner 90°	E14
Sliding Bread Box Lid	E50
Sliding Towel Bar	E59
Smithwick Knob	M51
Smithwick Pull	M51
Soffit Crown Molding	M10
Solid Stock	M24
Solid Wood Base End Open Shelf 24" Deep	E32
Solid Wood Peninsula Base End Open Shelf 12" Deep	E32
Solid Wood Wall End Open Shelf	D20
Specialty Panels	K11
Spice Caddy	E54
Spice Drawer Cabinet	D47
Spice Drawer Cabinet Replacement Hardware	M36
Spice Drawer Insert or Kit	E54
Spice Open Storage Shelf Only	D52
Spice Open Storage with Bottles	D52
Spice Rack Kit	D52
Spindles	M35
Split Decorative Posts	M34
Split Spindles	M35
Square Desk End Panel	H11
Square Desk End Panel	H11
Square Wood Knob	M39
Stack Molding	M22
Stain Kit	N11
Stainless Cutlery Divider	E53
Stainless Round Leg	M31
Stainless Utensil Tray or Kit	E51
Starter Molding	M14
Starter Trim	M13
Stem Glass Holder	D50
Sterling Base Column	E62
Sterling Corbel	M30
Sterling Crown Molding	M11
Sterling Leg	M32
Sterling Light Rail	M16
Sterling Starter Molding	M14
Sterling Tall Column	F29
Sterling Vanity Column	G63
Sterling Wall Column	D57
Stranded Copper Wire	M2
Styx Insert	L28
Sub Zero End Panel	F31

T

Tailored Knob	M38
Tailored Pull	M40
Tall Acanthus Capital	M27
Tall Column	F28
Tall Corner Angle	F12
Tall Corner Angle Stack	F12
Tall End Angle	F13
Tall End Angle Stack	F13
Tall End Panel	F30
Tall End Panel w/Stile	F30
Tall File Cabinet 24" Deep	H5
Tall Filler	F26
Tall Filler Overlay	F27
Tall Fluted Column	F28
Tall Fluted Filler	F27
Tall Pantry Pull-out	F11
Tall Pantry Pull-out 60 1/2" H	F11
Tambour Storage 18" H	D45
Tambour Storage Angle	D45
Tapered Leg	M32
Tide Bar Pull	M51
Tiered Pan and Lid Storage Pull-out	E40
Tiered Pan and Lid Storage Pull-out Kit	E45
Tiered Storage Shelf	D53
Timeless Onlay	M28
Toe Kick	E65, F33, G67, H13, I12
Toe Kick Drawer	C39
Toe Kick Furniture Corner	M34
Top Wide Rail	C30
Touch-Up Kit	N12
Touch-Up Pen	N13
Traditional Casing	M24
Traditional Light Rail	M14
Traditional Mullion	L23
Traditional Wood Edge	M21
Traditional Wood Tops	I6
Transition Molding	M23
Transitional Corbel	M30
Tray Dividers–Base	E48
Tray Dividers–Tall	F26
Tray Dividers–Wall	D51
Tri View Mirror	G25
Trunk Cup Pull	M49
Trunk Knob	M49
Trunk Pull	M39
Tulip Leg	M33

U

U-Shaped Deluxe Roll-out Tray	G2
Under Cabinet Door Storage	D44
Under Cabinet Panels	D53
Under Cabinet Shelf	D49
Under Cabinet Shelf 18" H	D49
Under Cabinet Shelf Corner	D49
Universal Custom Appliance Panel–Frame Only	K4
Universal Molding	M25
Utensil Drawer Organizer - Angled - Field Install Kit	E53
Utensil Tray or Kit	E51
Utility Cabinets 12" Deep	F1
Utility Cabinets 24" Deep	F2
Utility Cabinets 60 1/2" High 12" Deep	F4
Utility Cabinets 60 1/2" High 24" Deep	F4
Utility Cleaning Cabinet 24" Deep	F4
Utility Cleaning Cabinet 24" Deep - Broom Hook Replacement	F4
Utility Combination	F7
Utility Combination–Shelves Left	F7
Utility Deluxe Dovetailed Roll-out Tray	F8
Utility Extended Bottom 12" Deep	F3
Utility Extended Bottom 24" Deep	F3
Utility Message Center	F9
Utility Stack 60 1/2" High Deluxe Dovetailed Roll-out Tray	F8
Utility Stack 84"-96" High Deluxe Dovetailed Roll-out Tray	F9
Utility Stack Cabinets 12" Deep	F5
Utility Stack Cabinets 24" Deep	F6

ITEM	PAGE
Utility Stack Cabinets 60 1/2" High 12" Deep	F6
Utility Stack Cabinets 60 1/2" High 24" Deep	F7
V	
V-Groove Paneling	K10
Valance Contemporary	M7
Valance Corbel	M6
Valance Cove	M5
Valance Crown	M5
Valance Flat Panel	M8
Valance Furniture	M6
Valance Raised Panel	M7
Valance Shaker	M7
Valance Straight	M8
Valance Traditional	M6
Vanity Adjustable Drawer Dividers	G58
Vanity Base Blind Corner	G13
Vanity Base Double Door	G12
Vanity Base Drawer	G14
Vanity Base Four Drawer	G14
Vanity Base Hamper Top Mount	G16
Vanity Base Pull-out	G15
Vanity Base Pull-out Appliance	G15
Vanity Base Single Door	G12
Vanity Base Top Mount Wastebasket–Double	G15
Vanity Box	G63
Vanity Cabinet Full-Height Door	G11
Vanity Column	G63
Vanity Combination Drawer (2)	G8
Vanity Combination Drawer (3)	G9
Vanity Combination Drawer (6)	G10
Vanity Combination Drawer (8)	G10
Vanity Combination Drawer w/Decorative Accents (2) Bayshore Collection (S3)	G43
Vanity Combination Drawer w/Decorative Accents (2) Cologne Collection (S2)	G37
Vanity Combination Drawer w/Decorative Accents (2) Fairfield Collection (S5)	G54
Vanity Combination Drawer w/Decorative Accents (2) Montrose Collection (S1)	G31
Vanity Combination Drawer w/Decorative Accents (2) Prescott Collection (S4)	G49
Vanity Combination Drawer w/Decorative Accents (3) Bayshore Collection (S3)	G43
Vanity Combination Drawer w/Decorative Accents (3) Cologne Collection (S2)	G37
Vanity Combination Drawer w/Decorative Accents (3) Fairfield Collection (S5)	G55
Vanity Combination Drawer w/Decorative Accents (3) Montrose Collection (S1)	G31
Vanity Combination Drawer w/Decorative Accents (3) Prescott Collection (S4)	G49
Vanity Combination Drawer w/Decorative Accents (6) Bayshore Collection (S3)	G44
Vanity Combination Drawer w/Decorative Accents (6) Cologne Collection (S2)	G38
Vanity Combination Drawer w/Decorative Accents (6) Fairfield Collection (S5)	G55
Vanity Combination Drawer w/Decorative Accents (6) Montrose Collection (S1)	G32
Vanity Combination Drawer w/Decorative Accents (6) Prescott Collection (S4)	G50
Vanity Combination Drawer w/Decorative Accents (8) Bayshore Collection (S3)	G44
Vanity Combination Drawer w/Decorative Accents (8) Cologne Collection (S2)	G38
Vanity Combination Drawer w/Decorative Accents (8) Fairfield Collection (S5)	G56
Vanity Combination Drawer w/Decorative Accents (8) Montrose Collection (S1)	G32
Vanity Combination Drawer w/Decorative Accents (8) Prescott Collection (S4)	G50
Vanity Combination Drawer w/Decorative Accents–Full False Front (4) Bayshore Collection (S3)	G45
Vanity Combination Drawer w/Decorative Accents–Full False Front (4) Cologne Collection (S2)	G39
Vanity Combination Drawer w/Decorative Accents–Full False Front (4) Fairfield Collection (S5)	G56
Vanity Combination Drawer w/Decorative Accents–Full False Front (4) Montrose Collection (S1)	G33
Vanity Combination Drawer w/Decorative Accents–Full False Front (4) Prescott Collection (S4)	G51
Vanity Combination Drawer w/Decorative Accents–Full False Front (6) Bayshore Collection (S3)	G45
Vanity Combination Drawer w/Decorative Accents–Full False Front (6) Cologne Collection (S2)	G39
Vanity Combination Drawer w/Decorative Accents–Full False Front (6) Fairfield Collection (S5)	G56
Vanity Combination Drawer w/Decorative Accents–Full False Front (6) Montrose Collection (S1)	G33
Vanity Combination Drawer w/Decorative Accents–Full False Front (6) Prescott Collection (S4)	G51
Vanity Combination Drawer–Full False Front (4)	G9
Vanity Combination Drawer–Full False Front (6)	G9
Vanity Decorative Accent End Panel Bayshore Collection (S3)	G46
Vanity Decorative Accent End Panel Cologne Collection (S2)	G40
Vanity Decorative Accent End Panel Montrose Collection (S1)	G34
Vanity Decorative Accent End Panel Prescott Collection (S4)	G52
Vanity Decorative Accent Filler Bayshore Collection (S3)	G46
Vanity Decorative Accent Filler Cologne Collection (S2)	G40
Vanity Decorative Accent Filler Montrose Collection (S1)	G34
Vanity Decorative Accent Filler Prescott Collection (S4)	G52
Vanity Decorative Skirt w/Decorative Accents Bayshore Collection (S3)	G46
Vanity Decorative Skirt w/Decorative Accents Cologne Collection (S2)	G40
Vanity Decorative Skirt w/Decorative Accents Fairfield Collection (S5)	G57
Vanity Decorative Skirt w/Decorative Accents Montrose Collection (S1)	G34
Vanity Decorative Skirt w/Decorative Accents Prescott Collection (S4)	G52
Vanity Drawer Base Angle Four Drawer	G12
Vanity Drawer Base Angle Three Drawer	G12
Vanity Drawer Divider	G59
Vanity Drawer Storage Kit	G59
Vanity Easy Reach	G13
Vanity Easy Reach Wood Lazy Susan	G14
Vanity End Panel	G64
Vanity End Panel w/Stile	G65
Vanity Filler	G60
Vanity Filler Overlay	G61
Vanity Filler Pull-out	G15
Vanity Filler Pull-out Replacement Trays	G60
Vanity Fluted Column	G63
Vanity Fluted Filler	G62
Vanity Furniture Filler	G61
Vanity Hamper Base	G16
Vanity Hamper Linen Cabinet 88 1/2" H	G16
Vanity Hamper Linen Cabinet Top Mount 88 1/2" H	G16
Vanity Inside Corner Angle Filler	G61
Vanity Inside Corner Angle Filler Overlay	G61
Vanity Knee Drawer	G14
Vanity Linen Cabinet 48" H	G19
Vanity Linen Cabinet 88 1/2" H	G17
Vanity Linen Cabinet Deluxe Roll-out Tray (2)	G17
Vanity Linen Cabinet Deluxe Roll-out Tray (3)	G18
Vanity Linen Cabinet Four Drawer	G18
Vanity Linen Cabinet Three Drawer	G18
Vanity Linen Cabinet Top Mount Wastebasket-Double 88 1/2" H	G17
Vanity Linen Short Three Drawer	G19
Vanity Linen Short Two Drawer	G18
Vanity Linen Towel Storage	G17
Vanity Mirror Angle Cabinet	G25
Vanity Mirror Cabinet	G25
Vanity Mirror Cabinet Storage	G25
Vanity Mirror w/Storage	G25
Vanity Shallow Wood Tiered Drawer Storage	G58
Vanity Sink Base Angle–Double Door	G7
Vanity Sink Base Angle–Full-Height	G6
Vanity Sink Base Angle–Single Door	G7
Vanity Sink Base Bottom Drawer	G6
Vanity Sink Base Double Door	G3
Vanity Sink Base Double Door w/Decorative Accents Bayshore Collection (S3)	G41
Vanity Sink Base Double Door w/Decorative Accents Cologne Collection (S2)	G35
Vanity Sink Base Double Door w/Decorative Accents Fairfield Collection (S5)	G53
Vanity Sink Base Double Door w/Decorative Accents Montrose Collection (S1)	G29
Vanity Sink Base Double Door w/Decorative Accents Prescott Collection (S4)	G47
Vanity Sink Base Four Door	G3
Vanity Sink Base Four Drawer	G4
Vanity Sink Base Four Drawer w/Decorative Accents Bayshore Collection (S3)	G42
Vanity Sink Base Four Drawer w/Decorative Accents Cologne Collection (S2)	G36
Vanity Sink Base Four Drawer w/Decorative Accents Fairfield Collection (S5)	G54
Vanity Sink Base Four Drawer w/Decorative Accents Montrose Collection (S1)	G30
Vanity Sink Base Four Drawer w/Decorative Accents Prescott Collection (S4)	G48

ITEM	PAGE
Vanity Sink Base Single Door	G2
Vanity Sink Base Single Door w/Decorative Accents Bayshore Collection (S3)	G41
Vanity Sink Base Single Door w/Decorative Accents Cologne Collection (S2)	G35
Vanity Sink Base Single Door w/Decorative Accents Montrose Collection (S1)	G29
Vanity Sink Base Single Door w/Decorative Accents Prescott Collection (S4)	G47
Vanity Sink Base Three Door	G3
Vanity Sink Base Three Drawer	G4
Vanity Sink Base Three Drawer w/Decorative Accents Bayshore Collection (S3)	G42
Vanity Sink Base Three Drawer w/Decorative Accents Cologne Collection (S2)	G36
Vanity Sink Base Three Drawer w/Decorative Accents Fairfield Collection (S5)	G53
Vanity Sink Base Three Drawer w/Decorative Accents Montrose Collection (S1)	G30
Vanity Sink Base Three Drawer w/Decorative Accents Prescott Collection (S4)	G48
Vanity Sink Base Two Drawer	G4
Vanity Sink Base–Fluted Clipped Corners	G4
Vanity Sink Front	G6
Vanity Storage Rack Kit	G60
Vanity Utility Cabinet 18" Deep	G20
Vanity Utility Cabinet 18" Deep w/Deluxe Dovetailed Roll-out Tray	G22
Vanity Utility Cabinet 21" Deep	G21
Vanity Utility Cabinet 21" Deep w/Deluxe Dovetailed Roll-out Tray	G23
Vanity Vertical Lift Door Wall Cabinet	G19
Vanity Wall Boutique	G24
Vanity Wall Cabinet	G23
Vanity Wall Cabinet w/Decorative Accents Bayshore Collection (S3)	G45
Vanity Wall Cabinet w/Decorative Accents Cologne Collection (S2)	G39
Vanity Wall Cabinet w/Decorative Accents Fairfield Collection (S5)	G57
Vanity Wall Cabinet w/Decorative Accents Montrose Collection (S1)	G33
Vanity Wall Cabinet w/Decorative Accents Prescott Collection (S4)	G51
Vanity Wall–Recessed Mount	G24
Vanity Wood Tiered Drawer Storage	G58
Vauxhall Insert	L28
Venetian Bronze Rustic Knob	M42
Venetian Bronze Victorian Leaf Pull	M42
Vetro Brushed Aluminum	L6, L7
Victorian Insert	L9
Vinyl Edgebanding	N7
Viraguard Paneling	K12
Vista Mullion	L24
Void All Doors and Drawer Fronts	C36
Void All Drawer Boxes	C37
Void Doors Only	C36
Void Toe Kick	C38
Void Top Drawer Box	C37

W

Wall Angle 12" Deep	D11
Wall Angle 15" Deep	D12
Wall Angle Appliance Garage	D14
Wall Angle Appliance Garage Chrome Lazy Susan	D14
Wall Angle Appliance Garage Wood Lazy Susan	D14
Wall Angle Chrome Lazy Susan	D12
Wall Angle Chrome Lazy Susan Stack	D13
Wall Angle Stack	D13
Wall Angle Wood Lazy Susan	D12
Wall Angle Wood Lazy Susan Stack	D13
Wall Appliance Garage	D43
Wall Blind Corner 23 1/2"—42" H	D9
Wall Blind Corner 48" and 54" H	D9
Wall Blind Corner Stack	D10
Wall Box	D56
Wall Cabinet w/Spice Rack	D46
Wall China Display	D22
Wall Column	D56
Wall Compact Microwave Shelf	D26
Wall Compact Microwave w/Solid Wood Shelf	D26
Wall Corner Angle	D18
Wall Corner Angle Stack	D18
Wall Double Door 12"-42 H	D2
Wall Double Door 48" and 54" H	D3
Wall Easy Reach	D15
Wall End Angle	D19
Wall End Corner	D19
Wall End Panel	D58
Wall End Panel w/Stile	D58
Wall Filler	D53
Wall Filler Overlay	D54
Wall Filler Pull-out	D48
Wall Fluted Column	D57
Wall Fluted Filler	D55
Wall Hood Box	D32
Wall Hood Box Valance	D33
Wall Hood Box w/Columns & Wall Hood Box w/ Columns w/Extra Large Cove Top Plate	D33
Wall Hood Cabinet Run - Rosette Corbel	D37
Wall Hood Cabinet Run - Shelf w/Classic Crown Molding	D39
Wall Hood Cabinet Run - Shelf w/Extra Large Cove Molding	D39
Wall Hood Cabinet Run - Sterling Corbel	D38
Wall Hood Cabinet Run - Transitional Corbel	D38
Wall Hood Classic	D28
Wall Hood Classic Chimney	D29
Wall Hood Classic Chimney Flat Panel Valance	D30
Wall Hood Classic Chimney Raised Panel Valance	D31
Wall Hood Component Package (A, B & C)–Recirculating	D40
Wall Hood Component Package (D, E & F)–Vented	D40
Wall Hood Component Package (G, H & I)–Vented	D40
Wall Hood Component Package (J, K & L)–Vented	D40
Wall Hood Component Package (O, P, Q)–Vented	D41
Wall Hood Component Package (R, S, T)–Vented	D41
Wall Hood Cove	D35
Wall Hood Mantle Cabinet	D36
Wall Hood Mantle Column	D37
Wall Hood Mantle Column–Sterling	D37
Wall Hood Mantle Matching	D36
Wall Hood Matching	D28
Wall Hood Matching Straight Valance	D34
Wall Hung Vanity	G1
Wall Hung Vanity Combination Drawer	G1
Wall Hung Vanity Drawer	G2
Wall Hung Vanity Full-Height Door	G1
Wall Inside Corner Angle Filler	D54
Wall Inside Corner Angle Filler Overlay	D54
Wall Lateral Bi-Fold Cabinet	D45
Wall Message Center	D19
Wall Microwave Box	D27
Wall Microwave Cabinet	D24
Wall Microwave Cabinet w/Drawer	D26
Wall Microwave Cabinet w/Drawer–Extended Opening	D27
Wall Microwave Cabinet–Extended Opening	D25
Wall Microwave Shelf	D27
Wall Microwave Shelf Cabinet	D25
Wall Microwave w/Solid Wood Shelf	D25
Wall Multi-Storage Pantry	D46
Wall Open Cabinet	D21
Wall Pantry Pull-out	D46
Wall Pantry Pull-out Stack	D46
Wall Refrigerator 24" Deep	D3
Wall Refrigerator Top Hinge 24" Deep	D4
Wall Reverse-A-Shelf	D47
Wall Single Door 12"-42" H	D1
Wall Single Door 48" and 54" H	D2
Wall Stack Cabinet 48", 51" and 54" H	D5
Wall Top Hinge Cabinet 12" Deep	D4
Wall Wine Hutch	D22
Wall Wine Rack Cabinet	D47
Wastebasket Drawer Partition	C38
Wastebasket Lid	E45, H7
Waterton Knob	M51
Waterton Pull	M51
Whisper Touch™ Angle Restrictor Clip	N1
Whisper Touch™ Base Pantry Pull-Out Runners	N2
Whisper Touch™ Deluxe Dovetailed Roll-Out Tray Drawer Runners	N2
Whisper Touch™ Deluxe Dovetailed Roll-Out Tray Mounting Block Kit	N1
Whisper Touch™ Drawer Clips	N2
Whisper Touch™ Drawer Runners	N1
Whisper Touch™ Drawer Runners–Two Drawer Cabinets	N1
Whisper Touch™ Hinges–1/2" Overlay	N6
Whisper Touch™ Hinges–Face Mount	N6
Whisper Touch™ Hinges–Full Overlay	N5
Whisper Touch™ Hinges–Full Overlay	N5
Whisper Touch™ Vanity Base Pull-Out Runners	N2

ITEM	PAGE
Wide Dentil Molding	M23
Wide Scribe Molding	M19
Wine Shelf	D50
Wine Storage Cabinet	D23
Wintersday Insert	L18
Wire Stem Glass Holder	D50
Wire Tray Divider Kit	E48
Wood Lazy Susan	E23
Wood Lazy Susan Angle	E24
Wood Lazy Susan Kit for Wall Angle Cabinets	D51
Wood Sink Base	E9
Wood Sink Base 27" Deep	E9
Wood Tall Door Storage Kit	F26
Wood Tiered Drawer Storage Combination or Kit	E54
Wood Tiered Drawer Storage or Kit	E54
Wood Veneer Construction	C15
Wood Veneer Paneling	K9

Y

Yorkshire Insert	L10

Door Styles


Alder


Birch


Cherry


Hickory


Maple


Oak

Wood Species & Characteristics

Alder is softer than other hardwood species with a fine grain pattern. In its raw state, Alder's color can range from pale pink–brown to tan. Rustic Alder likely includes some combination of rustic characteristics such as open and closed knots, burls, worm holes, mineral streaks and sound cracks reflecting the inherent beauty of the wood. These characteristics are expected and preferred as they occur naturally in the material. Of the natural characteristics, open and closed knots are the most common in the species.

Birch is a medium-density hardwood with a distinct, moderate grain pattern that ranges from straight to wavy or curly. The predominant sapwood color is white to creamy yellow, while the heartwood varies in color from medium or dark brown to reddish brown, which may result in color variation within the same door.

Cherry is a rich multi-colored hardwood, often used in fine furniture. In its raw state, cherry has pinkish-brown hues with occasional shades of white, green, pink or grey. It may also contain small knots, pin holes and cherry fissures. A cherry fissure is a small crack that occurs naturally in the wood; it will ***not*** get bigger over time. Natural or light stains accent the color variations and characteristics in cherry, while dark stains soften its complexity. All cherry wood naturally darkens or "mellows" with age.

Crafted Hardwood Veneer is made from an engineered hardwood veneer to emulate the look of real Quartersawn Cherry, Maple or Oak. This material is less susceptible to expansion and contraction and offers a more consistent color and grain pattern.

EverCore™ is a mechanically compressed wood fiber material that reacts less to environmental conditions than other hardwood materials. This material is less susceptible to expansion and contractions that can cause joints to separate showing hairline cracks in painted product. It also provides a more consistent and smooth surface, eliminating the appearance of naturally occurring wood characteristics such as grain patterns, knots or mineral streaks. When EverCore™ is selected, the entire door including stiles, rails, and center panel, will be made from this material.

Hickory is a strong, open-grained wood that is known for its flowing grain pattern and dramatic variation in color. Hickory often contains random pecks, burls and mineral streaks. A single hickory door might vary from light to deep brown when finished in light or natural stains. Darker stains will mildly tone these color variations, but these very characteristics make each hickory kitchen unique.

High-Gloss Foils feature a smooth, glossy surface for a contemporary look. The High-Gloss foil is applied to medium-density fiberboard (MDF) using a roll bonding process. The doors have a coordinating gloss edge banding applied with a special process to minimize the seam between the face and edge of the door. Door and drawer front backs are matching in color with a standard sheen melamine. Cabinet face frames are painted solid hardwood to coordinate with the color of the doors and drawer fronts in the standard sheen. Cabinet boxes have a standard Matching Viraguard Interior (MIV) that brings the entire cabinet together. While great care has been taken to match the face frame to the doors and drawer fronts, texture, sheen and color variations can be expected. We recommend ordering specialty panels for High-Gloss foil ends as the standard end panels will be Viraguard. Prolonged exposure to tobacco smoke will discolor High-Gloss finishes, and this side effect is ***not*** covered under warranty.

Thermofoil doors are made out of thermofoil, which features a silky-smooth surface providing a uniform look from door to door. Thermofoil material is applied to medium-density fiberboard (MDF) using an intense heat and pressure-bonding process. The cabinetry face frame features solid hardwood finished to match the thermofoil doors and drawer fronts. While great care has been taken to match the face frame to the doors and drawer fronts, texture and color variations can be expected. Prolonged exposure to tobacco smoke will discolor thermofoil finishes, and this side effect is ***not*** covered under warranty.

Maple is a strong wood that is primarily off-white in its raw state. However, maple sometimes contains light hues of yellow-brown and pink as well as light tan or reddish-tinged streaks that darken with stain. Typically straight-grained, maple can be wavy or even curly. Hard maple offers more uniformity than other wood types, making it ideal for living spaces that feature a clean, streamlined appearance.

Oak is a strong, open-grained wood that ranges in color from white to yellow to reddish brown. Oak is sometimes streaked with green, yellow or black mineral deposits.

Quartersawn refers to the method of cutting natural wood. Lumber is cut through the rings at close to a 90 degree angle, creating a tighter, straighter and more consistent grain pattern. Finishes may appear slightly darker on quartersawn material. Face frame and end panels are supplied as plain-sawn material unless stated otherwise per cabinet.

Rustic doors likely include some combination of open knots, wormholes, dramatic color contrast, and mineral streaks reflecting the inherent beauty of the wood. These characteristics are expected and preferred as they occur naturally in the material; no one characteristic (i.e. open knots) is a defining trait of Rustic door styles. ***Must*** order matching end panels for rustic finished ends.

Wood-Grain Foil doors are made out of vinyl foil, which features an embossed surface providing the appearance of exotic wood character. The foil is wrapped around medium-density fiberboard (MDF) using adhesives to ensure a strong bond. Edges are covered with a matching vinyl edgebanding for a clean finished look. The cabinetry face frame features solid hardwood finished to compliment the Thermofoil doors and drawer fronts. While great care has been taken to match the face frame to the doors and drawer fronts, texture and color variations can be expected. Prolonged exposure to tobacco smoke will discolor Thermofoil finishes, and this side effect is ***not*** covered under warranty

Door Styles by Price Book Column

Col	Door Styles	Code
A	Grandview EverCore™ Roman–Half	AC3D1
	Grandview EverCore™ Square–Half	AC2D1
	Grandview Hickory Roman–Half	AC3H1
	Grandview Hickory Square–Half	AC2H1
	Grandview Oak Roman–Half	AC3O1
	Grandview Oak Square–Half	AC2O1
	Hanley Oak Roman	2SWC1
	Hanley Oak Square	2SW1
	Harper Oak	AC4O1
B	Grandview Maple Roman–Half	AC3M1
	Grandview Maple Square–Half	AC2M1
	Grandview Rustic Alder Square–Half	AC2A1
	Hanley Maple Roman	2NGC1
	Hanley Maple Square	2NG1
	Harper Maple	AC4M1
	Lyndale EverCore™–Half	AE8D1
	Lyndale Hickory–Half	AE8H1
	Lyndale Oak–Half	AE8O1
	Sydney Cream	SCS1
	Sydney White	SWS1
C	Amhurst Birch	HW1
	Amhurst Maple	WI1
	Amhurst Oak	AC5O1
	Belmont Hickory Roman	2WX1
	Belmont Hickory Square	2WT1
	Belmont Oak Roman	2ABN1
	Belmont Oak Square	2BN1
	Evana Cathedral Cream	ECR1
	Evana Cathedral White	EWR1
	Evana Cream	ECS1
	Evana White	EWS1
	Fox Chase Hickory Roman–Half	AB8H1
	Fox Chase Hickory Square–Half	AB7H1
	Fox Chase Oak Roman–Half	AB8O1
	Fox Chase Oak Square–Half	AB7O1
D	Amhurst Hickory	AC5H1
	Belmont Maple Roman	2AY1
	Belmont Maple Square	2GV1
	Fox Chase Maple Roman–Half	AB8M1
	Fox Chase Maple Square–Half	AB7M1
	Grandview Cherry Roman–Half	2GCR1
	Grandview Cherry Square–Half	2GCS1
	Grandview EverCore™ Roman–Full	AD0D1
	Grandview EverCore™ Square–Full	AC9D1
	Harper Cherry	AC4C1
	Layden Cannon Grey	AH2L1
	Layden Dove White	AH2W1
	Lyndale Maple–Half	AE8M1
	Lyndale Rustic Alder–Half	AE8A1
	Sheridan	SHD1
E	Camby Cannon Grey	AH3L1
	Camby Dove White	AH3W1
	Fox Chase Cherry Roman–Half	AB8C1
	Fox Chase Cherry Square–Half	AB7C1
	Fox Chase Hickory Roman–Full	AC0H1
	Fox Chase Hickory Square–Full	AB9H1
	Fox Chase Oak Roman–Full	AC0O1
	Fox Chase Oak Square–Full	AB9O1
	Grandview Hickory Roman–Full	AD0H1
	Grandview Hickory Square–Full	AC9H1
	Grandview Oak Roman–Full	AD0O1
	Grandview Oak Square–Full	AC9O1
	Larken Maple	AJ4M1
	Lyndale Cherry–Half	AE8C1
	Lyndale EverCore™–Full	MPD1
	Lyndale Hickory–Full	AE9H1
	Lyndale Oak–Full	AE9O1
	Northbrook	WP1
	Sedona Birch	AC8B1
	Sedona EverCore™	AC8D1

Col	Door Styles	Code
	Sedona Oak	AC8O1
F	Ferguson Oak	AH7O1
	Grandview Maple Roman–Full	AD0M1
	Grandview Maple Square–Full	AC9M1
	Grandview Rustic Alder Square–Full	AC9A1
	Larken Cherry	AJ4C1
	Marquette EverCore™ Roman–Half	TWAD1
	Marquette EverCore™ Square–Half	TWSD1
	Marquette Hickory Roman–Half	TWAH1
	Marquette Hickory Square–Half	TWSH1
	Marquette Oak Roman–Half	TWAO1
	Marquette Oak Square–Half	TWSO1
	Renway Maple	AH5M1
	Sedona Hickory	AC8H1
G	Brookfield Birch	BWB1
	Brookfield Hickory	BWH1
	Brookfield Oak	SMG1
	Ferguson Maple	AH7M1
	Fox Chase Maple Roman–Full	AC0M1
	Fox Chase Maple Square–Full	AB9M1
	Grandview Cherry Roman–Full	AD0C1
	Grandview Cherry Square–Full	AC9C1
	Halden Cannon Grey	AH4L1
	Halden Dove White	AH4W1
	Lyndale Maple–Full	MP1
	Lyndale Rustic Alder–Full	MPA1
	Lyndale Rustic Maple–Full	AC7M1
	Marquette Maple Roman–Half	TWAM1
	Marquette Maple Square–Half	TWSM1
	Marquette Rustic Alder Square–Half	TWSA1
	Maxton	AG7L1
	Polarcrest	ND1
	Renway Cherry	AH5C1
	Sedona Maple	SNM1
	Sedona Rustic Alder	SNA1
	Shepparton Maple	AH6M1
	Trumbull Quartersawn Oak	AJ0O1
H	Avery EverCore™	MLD1
	Ferguson Cherry	AH7C1
	Marquette EverCore™ Roman–Full	PWD1
	Marquette EverCore™ Square–Full	MTD1
	Marquette Hickory Roman–Full	PWH1
	Marquette Hickory Square–Full	MTH1
	Marquette Oak Roman–Full	PWO1
	Marquette Oak Square–Full	MTO1
I	Brookfield EverCore™	BWDD1
	Fox Chase Cherry Roman–Full	AC0C1
	Fox Chase Cherry Square–Full	AB9C1
	Lyndale Cherry–Full	LY1
	Lyndale Rustic Cherry–Full	AC7C1
	Marquette Cherry Roman–Half	TWAC1
	Marquette Cherry Square–Half	TWSC1
	Marquette Maple Roman–Full	PWM1
	Marquette Maple Square–Full	MTM1
	Marquette Rustic Alder Square–Full	MTA1
	Putnam EverCore™	DRHD1
	Sedona Cherry	SNC1
	Shepparton Cherry	AH6C1
	Trumbull Maple	AJ0M1
	Trumbull Rustic Alder	AJ0A1
J	Avery Maple	ML1
	Barnet Crafted Oak	AH9O1
	Cornell Maple	AC1M1
	Durango Oak	WLO1
	Durango Rustic Alder	WLA1
	Durango Rustic Birch	DAB1
	Harrington Maple Square	AA6M1
	Judson Maple Square	AB5M1
	Knollwood EverCore™	PKD1
	Mandolay Birch	PVB1

Col	Door Styles	Code
	Melrose	MRO1
	Putnam Oak Square	AB2O1
K	Barnet Crafted Maple	AH9M1
	Brookfield Maple	BWM1
	Cornell Cherry	AC1C1
	Durango Rustic Hickory	DAH1
	Mandolay Maple	PVM1
	Putnam Maple	DRHM1
	Putnam Rustic Alder	DRHA1
	Trumbull Cherry	AJ0C1
L	Abington Oak	TMKO1
	Avery Cherry	AW1
	Durango Maple	WLM1
	Harrington Cherry Square	AA6C1
	Judson Cherry Square	AB5C1
	Knollwood Maple Square	PKM1
	Marquette Cherry Roman–Full	PWC1
	Marquette Cherry Square–Full	MTC1
	Morristown	SU1
	Parker House Maple	PDM1
M	Abington Hickory	TMKH1
	Barnet Crafted Cherry	AH9C1
	Brookfield Cherry	BWC1
	Chanlott Maple	AJ3M1
	Durango Cherry	WLCC1
	Durango Rustic Maple	AC6M1
	Jovana Maple	AJ2M1
	Lasalle	LBD1
	Mandolay Cherry	PVC1
	Seton Maple Square	AB0M1
N	Argonne Maple	ASMD1
	Knollwood Cherry Square	PKC1
	Parker House Cherry	PDC1
	Putnam Cherry	DRHC1
	Rutherford Maple	RTM1
O	Argonne Cherry	ASCD1
	Chanlott Cherry	AJ3C1
	Durango Rustic Cherry	AC6C1
	Garrison Maple Square	AB1M1
	Glennberry Maple	GRM1
	Jamison Maple Square	AA5M1
	Jovana Cherry	AJ2C1
	Lockeford Maple	LCM1
	Rutherford Cherry	RTC1
	Seton Cherry Square	AB0C1
	Tennyson Maple Square	AA0M1
P	Garrison Cherry Square	AB1C1
	Glennberry Cherry	GRC1
	Jamison Cherry Square	AA5C1
	Lockeford Cherry	LCC1
	Tennyson Cherry Square	AA0C1
Q	Courtney Maple	CRM1
	Kendrick Maple Square	AB6M1
	Lincoln Maple Square	AB3M1
	Vanderbilt Maple Square	AA1M1
R	Courtney Cherry	CRC1
	Kendrick Cherry Square	AB6C1
	Lincoln Cherry Square	AB3C1
	Vanderbilt Cherry Square	AA1C1

Door Styles Alphabetically

Col	Door Styles	Code
M	Abington Hickory	TMKH1
L	Abington Oak	TMKO1
C	Amhurst Birch	HW1
D	Amhurst Hickory	AC5H1
C	Amhurst Maple	WI1
C	Amhurst Oak	AC5O1
O	Argonne Cherry	ASCD1
N	Argonne Maple	ASMD1
L	Avery Cherry	AW1
H	Avery EverCore™	MLD1
J	Avery Maple	ML1
M	Barnet Crafted Cherry	AH9C1
K	Barnet Crafted Maple	AH9M1
J	Barnet Crafted Oak	AH9O1
C	Belmont Hickory Roman	2WX1
C	Belmont Hickory Square	2WT1
D	Belmont Maple Roman	2AY1
D	Belmont Maple Square	2GV1
C	Belmont Oak Roman	2ABN1
C	Belmont Oak Square	2BN1
G	Brookfield Birch	BWB1
M	Brookfield Cherry	BWC1
I	Brookfield EverCore™	BWDD1
G	Brookfield Hickory	BWH1
K	Brookfield Maple	BWM1
G	Brookfield Oak	SMG1
E	Camby Cannon Grey	AH3L1
E	Camby Dove White	AH3W1
O	Chanlott Cherry	AJ3C1
M	Chanlott Maple	AJ3M1
K	Cornell Cherry	AC1C1
J	Cornell Maple	AC1M1
R	Courtney Cherry	CRC1
Q	Courtney Maple	CRM1
M	Durango Cherry	WLCC1
L	Durango Maple	WLM1
J	Durango Oak	WLO1
J	Durango Rustic Alder	WLA1
J	Durango Rustic Birch	DAB1
O	Durango Rustic Cherry	AC6C1
K	Durango Rustic Hickory	DAH1
M	Durango Rustic Maple	AC6M1
C	Evana Cathedral Cream	ECR1
C	Evana Cathedral White	EWR1
C	Evana Cream	ECS1
C	Evana White	EWS1
H	Ferguson Cherry	AH7C1
G	Ferguson Maple	AH7M1
F	Ferguson Oak	AH7O1
I	Fox Chase Cherry Roman–Full	AC0C1
E	Fox Chase Cherry Roman–Half	AB8C1
I	Fox Chase Cherry Square–Full	AB9C1
E	Fox Chase Cherry Square–Half	AB7C1
E	Fox Chase Hickory Roman–Full	AC0H1
C	Fox Chase Hickory Roman–Half	AB8H1
E	Fox Chase Hickory Square–Full	AB9H1
C	Fox Chase Hickory Square–Half	AB7H1
G	Fox Chase Maple Roman–Full	AC0M1
D	Fox Chase Maple Roman–Half	AB8M1
G	Fox Chase Maple Square–Full	AB9M1
D	Fox Chase Maple Square–Half	AB7M1
E	Fox Chase Oak Roman–Full	AC0O1
C	Fox Chase Oak Roman–Half	AB8O1
E	Fox Chase Oak Square–Full	AB9O1
C	Fox Chase Oak Square–Half	AB7O1
P	Garrison Cherry Square	AB1C1
O	Garrison Maple Square	AB1M1
P	Glennberry Cherry	GRC1
O	Glennberry Maple	GRM1
G	Grandview Cherry Roman–Full	AD0C1
D	Grandview Cherry Roman–Half	2GCR1
G	Grandview Cherry Square–Full	AC9C1
D	Grandview Cherry Square–Half	2GCS1
D	Grandview EverCore™ Roman–Full	AD0D1
A	Grandview EverCore™ Roman–Half	AC3D1
D	Grandview EverCore™ Square–Full	AC9D1
A	Grandview EverCore™ Square–Half	AC2D1
E	Grandview Hickory Roman–Full	AD0H1
A	Grandview Hickory Roman–Half	AC3H1
E	Grandview Hickory Square–Full	AC9H1
A	Grandview Hickory Square–Half	AC2H1
F	Grandview Maple Roman–Full	AD0M1
B	Grandview Maple Roman–Half	AC3M1
F	Grandview Maple Square–Full	AC9M1
B	Grandview Maple Square–Half	AC2M1
E	Grandview Oak Roman–Full	AD0O1
A	Grandview Oak Roman–Half	AC3O1
E	Grandview Oak Square–Full	AC9O1
A	Grandview Oak Square–Half	AC2O1
F	Grandview Rustic Alder Square–Full	AC9A1
B	Grandview Rustic Alder Square–Half	AC2A1
G	Halden Cannon Grey	AH4L1
G	Halden Dove White	AH4W1
B	Hanley Maple Roman	2NGC1
B	Hanley Maple Square	2NG1
A	Hanley Oak Roman	2SWC1
A	Hanley Oak Square	2SW1
D	Harper Cherry	AC4C1
B	Harper Maple	AC4M1
A	Harper Oak	AC4O1
L	Harrington Cherry Square	AA6C1
J	Harrington Maple Square	AA6M1
P	Jamison Cherry Square	AA5C1
O	Jamison Maple Square	AA5M1
O	Jovana Cherry	AJ2C1
M	Jovana Maple	AJ2M1
L	Judson Cherry Square	AB5C1
J	Judson Maple Square	AB5M1
R	Kendrick Cherry Square	AB6C1
Q	Kendrick Maple Square	AB6M1
N	Knollwood Cherry Square	PKC1
J	Knollwood EverCore™	PKD1
L	Knollwood Maple Square	PKM1
F	Larken Cherry	AJ4C1
E	Larken Maple	AJ4M1
M	Lasalle	LBD1
D	Layden Cannon Grey	AH2L1
D	Layden Dove White	AH2W1
R	Lincoln Cherry Square	AB3C1
Q	Lincoln Maple Square	AB3M1
P	Lockeford Cherry	LCC1
O	Lockeford Maple	LCM1
I	Lyndale Cherry–Full	LY1
E	Lyndale Cherry–Half	AE8C1
E	Lyndale EverCore™–Full	MPD1
B	Lyndale EverCore™–Half	AE8D1
E	Lyndale Hickory–Full	AE9H1
B	Lyndale Hickory–Half	AE8H1
G	Lyndale Maple–Full	MP1
D	Lyndale Maple–Half	AE8M1
E	Lyndale Oak–Full	AE9O1
B	Lyndale Oak–Half	AE8O1
G	Lyndale Rustic Alder–Full	MPA1
D	Lyndale Rustic Alder–Half	AE8A1
I	Lyndale Rustic Cherry–Full	AC7C1
G	Lyndale Rustic Maple–Full	AC7M1
J	Mandolay Birch	PVB1
M	Mandolay Cherry	PVC1
K	Mandolay Maple	PVM1
L	Marquette Cherry Roman–Full	PWC1
I	Marquette Cherry Roman–Half	TWAC1
L	Marquette Cherry Square–Full	MTC1
I	Marquette Cherry Square–Half	TWSC1
H	Marquette EverCore™ Roman–Full	PWD1
F	Marquette EverCore™ Roman–Half	TWAD1
H	Marquette EverCore™ Square–Full	MTD1
F	Marquette EverCore™ Square–Half	TWSD1
H	Marquette Hickory Roman–Full	PWH1
F	Marquette Hickory Roman–Half	TWAH1
H	Marquette Hickory Square–Full	MTH1
F	Marquette Hickory Square–Half	TWSH1
I	Marquette Maple Roman–Full	PWM1
G	Marquette Maple Roman–Half	TWAM1
I	Marquette Maple Square–Full	MTM1
G	Marquette Maple Square–Half	TWSM1
H	Marquette Oak Roman–Full	PWO1
F	Marquette Oak Roman–Half	TWAO1
H	Marquette Oak Square–Full	MTO1
F	Marquette Oak Square–Half	TWSO1
I	Marquette Rustic Alder Square–Full	MTA1
G	Marquette Rustic Alder Square–Half	TWSA1
G	Maxton	AG7L1
J	Melrose	MRO1
L	Morristown	SU1
E	Northbrook	WP1
N	Parker House Cherry	PDC1
L	Parker House Maple	PDM1
G	Polarcrest	ND1
N	Putnam Cherry	DRHC1
I	Putnam EverCore™	DRHD1
K	Putnam Maple	DRHM1
J	Putnam Oak Square	AB2O1
K	Putnam Rustic Alder	DRHA1
G	Renway Cherry	AH5C1
F	Renway Maple	AH5M1
O	Rutherford Cherry	RTC1
N	Rutherford Maple	RTM1
E	Sedona Birch	AC8B1
I	Sedona Cherry	SNC1
E	Sedona EverCore™	AC8D1
F	Sedona Hickory	AC8H1
G	Sedona Maple	SNM1
E	Sedona Oak	AC8O1
G	Sedona Rustic Alder	SNA1
O	Seton Cherry Square	AB0C1
M	Seton Maple Square	AB0M1
I	Shepparton Cherry	AH6C1
G	Shepparton Maple	AH6M1
D	Sheridan	SHD1
B	Sydney Cream	SCS1
B	Sydney White	SWS1
P	Tennyson Cherry Square	AA0C1
O	Tennyson Maple Square	AA0M1
K	Trumbull Cherry	AJ0C1
I	Trumbull Maple	AJ0M1
G	Trumbull Quartersawn Oak	AJ0O1
I	Trumbull Rustic Alder	AJ0A1
R	Vanderbilt Cherry Square	AA1C1
Q	Vanderbilt Maple Square	AA1M1

Abington

Full Overlay

TMKH1 Hickory Price Column M

TMKO1 Oak Price Column L

Scan to view all Abington doors

Full Overlay

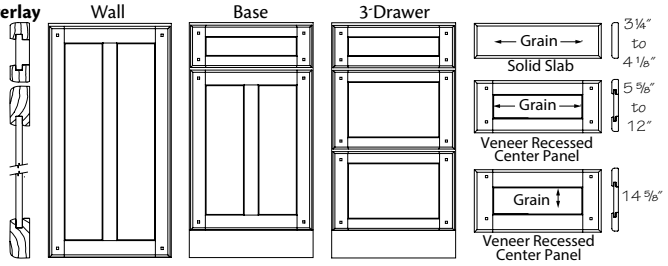

Door Configuration Chart

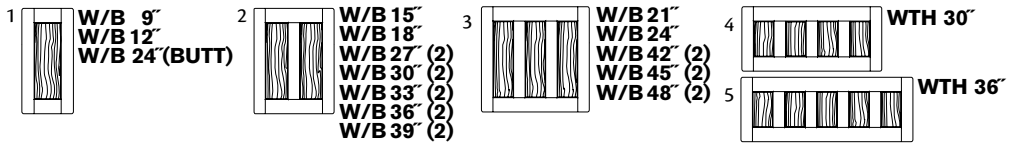

- Solid wood door frame with walnut pegs in 2 1/4" stiles and rails
- Single or multiple side by side veneer recessed panels on wall and base doors
- Five-piece recessed drawer front with walnut pegs
- When drawer fronts are supplied as a solid slab, they will ***not*** have corner pegs
- Glass door options have no center divider
- Concealed hinge
- Decorative hardware is required
- See Door Configuration Chart for panel arrangement

Decorative Doors & Inserts Available

Aluminum Frame Glass
- Fresco Brushed Aluminum
- Vetro Brushed Aluminum

Camed Glass
- Chateau
- Classic Camed Insert
- Palisades
- Penrose
- Victorian
- Yorkshire

Classic Glass
- Bistro
- Prepared for Glass
- Prism
- Shadow

Etched Glass
- Crossroads
- Lisbon
- Modern Frosted Insert
- Prairie
- Satina

Layered Glass
- Antiquity
- Burlap
- Mirage
- Silk
- Wintersday

Mullion Doors
- Ambry
- Castlegate
- Evansville
- Hewitt
- Showcase Mullion
- Traditional Mullion

Specialty Inserts
- Chalkboard Insert
- Leather Insert

Textured Glass
- Cascade
- Dolace
- Modern Textured Insert
- Moire
- Ravenna
- Styx
- Vauxhall

Abington Finishes

❖ *Available as Standard*
● *Premium Upcharge*

		Abington Hickory	Abington Oak
		TMKH1	TMKO1
Autumn Blush	AB		❖
Autumn Blush Suede	C21		●
Autumn Blush W/Onyx Glaze Suede	E10		●
Autumn Blush W/Onyx Glaze	A56		●
Baltic	D78		❖
Baltic Suede	D80		●
Cannon Grey	D81		❖
Cannon Grey Suede	D83		●
Cognac	CO	❖	❖
Cognac Suede	D85	●	●
Fawn	FN		❖
Fawn Suede	D51		●
Ginger	C88	❖	❖
Ginger Suede	C19	●	●
Ginger W/Sable Glaze Suede	E15	●	●
Ginger W/Sable Glaze	C11	●	●
Hazel	C16	❖	❖
Hazel Suede	C17	●	●
Honey Spice	HS	❖	❖
Honey Spice Suede	D88	●	●
Husk	B82	❖	❖
Husk Suede	C13	●	●
Kaffé	KA	❖	❖
Kaffé Suede	C27	●	●
Molasses	E58	❖	❖
Molasses Suede	E59	●	●
Natural	NA	❖	❖
Natural Suede	D89	●	●
Onyx	A21		●
Onyx Suede	D44		●
Peppercorn	PC		❖
Peppercorn Suede	D53		●
Praline	PR	❖	❖
Praline Suede	C78	●	●
Praline W/Onyx Glaze Suede	E16	●	
Praline W/Onyx Glaze	A45	●	
Saddle	B81	❖	❖
Saddle Suede	C12	●	●
Slate	B64	❖	❖
Slate Suede	C72	●	●
Sunset	SU	❖	
Sunset Suede	D49	●	
Unfinished	UF	❖	❖

Amhurst

Scan to view all Amhurst doors

Full Overlay

HW1	Birch	Price Column C
AC5H1	Hickory	Price Column D
WI1	Maple	Price Column C
AC5O1	Oak	Price Column C

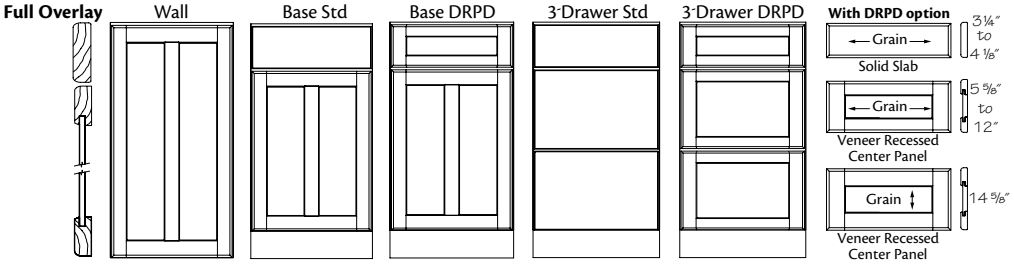

Door Configuration Chart

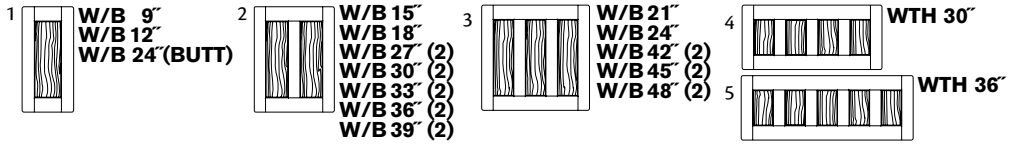

- Solid wood door frame with 2 1/4″ stiles and rails
- Single or multiple side by side veneer recessed panels on wall and base doors
- Slab drawer front
- Deluxe Recessed Panel Drawer (DRPD) front available
- Concealed hinge
- Glass door options have no center divider
- Decorative hardware is required
- See Door Configuration Chart for panel arrangement

Decorative Doors & Inserts Available

Aluminum Frame Glass
- Fresco Brushed Aluminum
- Vetro Brushed Aluminum

Camed Glass
- Chateau
- Classic Camed Insert
- Palisades
- Penrose
- Victorian
- Yorkshire

Classic Glass
- Bistro
- Prepared for Glass
- Prism
- Shadow

Etched Glass
- Crossroads
- Lisbon
- Modern Frosted Insert
- Prairie
- Satina

Layered Glass
- Antiquity
- Mirage
- Silk
- Wintersday

Mullion Doors
- Ambry
- Castlegate
- Evansville
- Hewitt
- Palladia ▲
- Raleigh ▲
- Showcase Mullion
- Traditional Mullion

Specialty Inserts
- Chalkboard Insert
- Leather Insert

Textured Glass
- Cascade
- Dolace
- Modern Textured Insert
- Moire
- Ravenna
- Styx
- Vauxhall

▲ Only available in Maple door styles

Amhurst Finishes

❖ *Available as Standard*
● *Premium Upcharge*

		HW1	AC5H1	WI1	AC5O1
		Amhurst Birch	Amhurst Hickory	Amhurst Maple	Amhurst Oak
Autumn Blush	AB				❖
Autumn Blush Suede	C21				●
Autumn Blush W/Onyx Glaze Suede	E10				●
Autumn Blush W/Onyx Glaze	A56				●
Baltic	D78				❖
Baltic Suede	D80				●
Biscotti	BO			●	
Biscotti Suede	D36			●	
Biscotti W/Cinder Glaze Suede	E24			●	
Biscotti W/Cocoa Glaze Suede	E25			●	
Biscotti W/Cinder Glaze	B91			●	
Biscotti W/Cocoa Glaze	IG			●	
Bonsai	E69			●	
Bonsai Suede	E70			●	
Burmese	E67			●	
Burmese Suede	E68			●	
Cabernet	CT	❖		❖	
Cabernet Suede	C80	●		●	
Cannon Grey	D81				❖
Cannon Grey Suede	D83				●
Canvas	CV			●	
Canvas Suede	D37			●	
Canvas W/Cinder Glaze Suede	E26			●	
Canvas W/Cocoa Glaze Suede	E27			●	
Canvas W/Cinder Glaze	B90			●	
Canvas W/Cocoa Glaze	VG			●	
Chai	C29			●	
Chai Suede	D39			●	
Chai W/Cinder Glaze Suede	E28			●	
Chai W/Cocoa Glaze Suede	E29			●	
Chai W/Cinder Glaze	C32			●	
Chai W/Cocoa Glaze	C30			●	
Chestnut	CN	❖		❖	
Chestnut Suede	C23	●		●	
Chestnut W/Onyx Glaze Suede	E12			●	
Chestnut W/Onyx Glaze	A54			●	
Chocolate	CC	❖		❖	
Chocolate Suede	D87	●		●	
Cinnamon	CA	❖		❖	
Cinnamon Suede	C74	●		●	
Cinnamon W/Onyx Glaze Suede	E14			●	
Cinnamon W/Onyx Glaze	A48			●	
Cognac	CO	❖	❖	❖	❖
Cognac Suede	D85	●	●	●	●
Dove White	DW			●	
Dove White Suede	D40			●	
Dove White W/Cinder Glaze Suede	E30			●	
Dove White W/Cocoa Glaze Suede	E31			●	
Dove White W/Cinder Glaze	B89			●	
Dove White W/Cocoa Glaze	A15			●	
Fawn	FN				❖
Fawn Suede	D51				●
Ginger	C88	❖	❖	❖	❖
Ginger Suede	C19	●	●	●	●
Ginger W/Sable Glaze Suede	E15	●	●	●	●
Ginger W/Sable Glaze	C11	●	●	●	●
Greyloft	B65			●	
Greyloft Suede	D41			●	
Greyloft W/Sable Glaze Suede	E32			●	
Greyloft W/Sable Glaze	B66			●	

		HW1	AC5H1	WI1	AC5O1
		Amhurst Birch	Amhurst Hickory	Amhurst Maple	Amhurst Oak
Hazel	C16	❖	❖		❖
Hazel Suede	C17	●	●		●
Honey Spice	HS	❖	❖	❖	❖
Honey Spice Suede	D88	●	●	●	●
Husk	B82	❖	❖		❖
Husk Suede	C13	●	●		●
Kaffé	KA	❖	❖	❖	❖
Kaffé Suede	C27	●	●	●	●
Lagoon	E63			●	
Lagoon Suede	E64			●	
Linen	D90			●	
Linen Suede	D93			●	
Linen W/Cinder Glaze Suede	E33			●	
Linen W/Cocoa Glaze Suede	E34			●	
Linen W/Cinder Glaze	D96			●	
Linen W/Cocoa Glaze	D94			●	
Midnight	B69			●	
Midnight Suede	D42			●	
Midnight W/Onyx Glaze Suede	E35			●	
Midnight W/Onyx Glaze	B70			●	
Molasses	E58	❖	❖	❖	❖
Molasses Suede	E59	●	●	●	●
Moonshine	D98			●	
Moonshine Suede	E02			●	
Moonshine W/Cinder Glaze Suede	E36			●	
Moonshine W/Cocoa Glaze Suede	E37			●	
Moonshine W/Cinder Glaze	E04			●	
Moonshine W/Cocoa Glaze	E03			●	
Mushroom	A11			●	
Mushroom Suede	D43			●	
Mushroom W/Cinder Glaze Suede	E38			●	
Mushroom W/Cocoa Glaze Suede	E39			●	
Mushroom W/Cinder Glaze	B92			●	
Mushroom W/Cocoa Glaze	A12			●	
Natural	NA	❖	❖	❖	❖
Natural Suede	D89	●	●	●	●
Onyx	A21			●	●
Onyx Suede	D44			●	●
Pebble Grey	B83			●	
Pebble Grey Suede	D45			●	
Pebble Grey W/Cocoa Glaze Suede	E40			●	
Pebble Grey W/Cocoa Glaze	B84			●	
Peppercorn	PC			❖	❖
Peppercorn Suede	D53			●	●
Praline	PR	❖	❖	❖	❖
Praline Suede	C78	●	●	●	●
Praline W/Onyx Glaze Suede	E16		●	●	
Praline W/Onyx Glaze	A45		●	●	
Saddle	B81	❖	❖	❖	❖
Saddle Suede	C12	●	●	●	●
Slate	B64	❖	❖	❖	❖
Slate Suede	C72	●	●	●	●
Sunset	SU		❖		
Sunset Suede	D49		●		
Surfside	E65			●	
Surfside Suede	E66			●	
Unfinished	UF	❖	❖	❖	❖

Argonne

Full Overlay

ASCD1 Cherry Price Column O

ASMD1 Maple Price Column N

Scan to view all Argonne doors

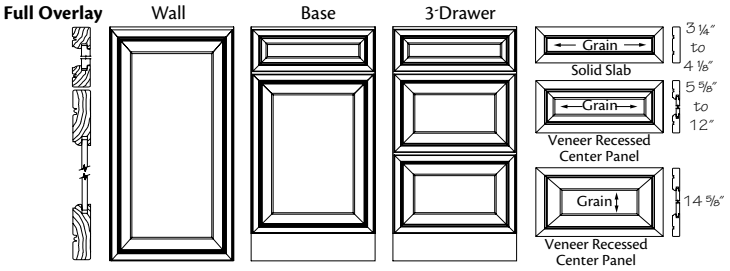

- Solid wood mitered door frame with 3″ stiles and rails
- Square veneer recessed panel on wall and base doors
- Drawer front varies depending on height
- Concealed hinge
- Decorative hardware is required

Decorative Doors & Inserts Available

Aluminum Frame Glass
- Fresco Brushed Aluminum
- Vetro Brushed Aluminum

Camed Glass
- Chateau
- Classic Camed Insert
- Palisades
- Penrose
- Victorian
- Yorkshire

Classic Glass
- Bistro
- Prepared for Glass
- Prism
- Shadow

Etched Glass
- Crossroads
- Lisbon
- Modern Frosted Insert
- Prairie
- Satina

Layered Glass
- Antiquity
- Mirage
- Silk
- Wintersday

Mullion Doors
- Castlegate
- Evansville
- Hewitt
- Showcase Mullion
- Traditional Mullion

Specialty Inserts
- Chalkboard Insert
- Leather Insert

Textured Glass
- Cascade
- Dolace
- Modern Textured Insert
- Moire
- Ravenna
- Styx
- Vauxhall

Argonne Finishes

❖ *Available as Standard*
● *Premium Upcharge*

		ASCD1 Argonne Cherry	ASMD1 Argonne Maple
Autumn Blush	AB	❖	
Autumn Blush Suede	C21	●	
Autumn Blush W/Onyx Glaze Suede	E10	●	
Autumn Blush W/Onyx Glaze	A56	●	
Baltic	D78	❖	
Baltic Suede	D80	●	
Biscotti	BO		●
Biscotti Suede	D36		●
Biscotti W/Cinder Glaze Suede	E24		●
Biscotti W/Cocoa Glaze Suede	E25		●
Biscotti W/Cinder Glaze	B91		●
Biscotti W/Cocoa Glaze	IG		●
Bonsai	E69		●
Bonsai Suede	E70		●
Burmese	E67		●
Burmese Suede	E68		●
Cabernet	CT	❖	❖
Cabernet Suede	C80	●	●
Cabernet W/Onyx Glaze Suede	E11	●	
Cabernet W/Onyx Glaze	A58	●	
Cannon Grey	D81	❖	
Cannon Grey Suede	D83	●	
Canvas	CV		●
Canvas Suede	D37		●
Canvas W/Cinder Glaze Suede	E26		●
Canvas W/Cocoa Glaze Suede	E27		●
Canvas W/Cinder Glaze	B90		●
Canvas W/Cocoa Glaze	VG		●
Chai	C29		●
Chai Suede	D39		●
Chai W/Cinder Glaze Suede	E28		●
Chai W/Cocoa Glaze Suede	E29		●
Chai W/Cinder Glaze	C32		●
Chai W/Cocoa Glaze	C30		●
Chestnut	CN		❖
Chestnut Suede	C23		●
Chestnut W/Onyx Glaze Suede	E12		●
Chestnut W/Onyx Glaze	A54		●
Chocolate	CC	❖	❖
Chocolate Suede	D87	●	●
Chocolate W/Ebony Glaze	EG	●	
Chocolate W/Ebony Glaze Suede	E13	●	
Cinnamon	CA	❖	❖
Cinnamon Suede	C74	●	●
Cinnamon W/Onyx Glaze Suede	E14	●	●
Cinnamon W/Onyx Glaze	A48	●	●
Cognac	CO	❖	❖
Cognac Suede	D85	●	●
Dove White	DW		●
Dove White Suede	D40		●
Dove White W/Cinder Glaze Suede	E30		●
Dove White W/Cocoa Glaze Suede	E31		●
Dove White W/Cinder Glaze	B89		●
Dove White W/Cocoa Glaze	A15		●
Ginger	C88	❖	❖
Ginger Suede	C19	●	●
Ginger W/Sable Glaze Suede	E15	●	●
Ginger W/Sable Glaze	C11	●	●
Greyloft	B65		●
Greyloft Suede	D41		●
Greyloft W/Sable Glaze Suede	E32		●
Greyloft W/Sable Glaze	B66		●
Hazel	C16	❖	
Hazel Suede	C17	●	
Honey Spice	HS	❖	❖
Honey Spice Suede	D88	●	●
Husk	B82	❖	
Husk Suede	C13	●	
Kaffé	KA	❖	❖
Kaffé Suede	C27	●	●
Lagoon	E63		●
Lagoon Suede	E64		●
Linen	D90		●
Linen Suede	D93		●
Linen W/Cinder Glaze Suede	E33		●
Linen W/Cocoa Glaze Suede	E34		●
Linen W/Cinder Glaze	D96		●
Linen W/Cocoa Glaze	D94		●
Midnight	B69		●
Midnight Suede	D42		●
Midnight W/Onyx Glaze Suede	E35		●
Midnight W/Onyx Glaze	B70		●
Molasses	E58	❖	❖
Molasses Suede	E59	●	●
Moonshine	D98		●
Moonshine Suede	E02		●
Moonshine W/Cinder Glaze Suede	E36		●
Moonshine W/Cocoa Glaze Suede	E37		●
Moonshine W/Cinder Glaze	E04		●
Moonshine W/Cocoa Glaze	E03		●
Mushroom	A11		●
Mushroom Suede	D43		●
Mushroom W/Cinder Glaze Suede	E38		●
Mushroom W/Cocoa Glaze Suede	E39		●
Mushroom W/Cinder Glaze	B92		●
Mushroom W/Cocoa Glaze	A12		●
Natural	NA	❖	❖
Natural Suede	D89	●	●
Onyx	A21		●
Onyx Suede	D44		●
Pebble Grey	B83		●
Pebble Grey Suede	D45		●
Pebble Grey W/Cocoa Glaze Suede	E40		●
Pebble Grey W/Cocoa Glaze	B84		●
Peppercorn	PC	❖	❖
Peppercorn Suede	D53	●	●
Praline	PR	❖	❖
Praline Suede	C78	●	●
Praline W/Onyx Glaze Suede	E16		●
Praline W/Onyx Glaze	A45		●
Saddle	B81	❖	❖
Saddle Suede	C12	●	●
Slate	B64	❖	❖
Slate Suede	C72	●	●
Sunset	SU	❖	
Sunset Suede	D49	●	
Surfside	E65		●
Surfside Suede	E66		●
Unfinished	UF	❖	❖

Avery

Full Overlay

AW1	Cherry	Price Column L
MLD1	EverCore™	Price Column H
ML1	Maple	Price Column J

Scan to view all Avery doors

Full Overlay

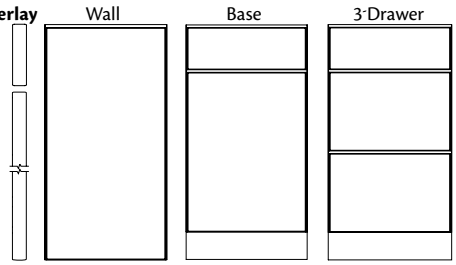

- Solid slab on wall and base doors
- Slab drawer front
- Wood grain orientation is vertical on door and horizontal on drawer front; ***not*** book matched between pieces
- Concealed hinge
- Decorative hardware is required

Decorative Doors & Inserts Available

Aluminum Frame Glass
- Fresco Brushed Aluminum
- Vetro Brushed Aluminum

Camed Glass
- Chateau
- Classic Camed Insert
- Palisades
- Penrose
- Victorian
- Yorkshire

Classic Glass
- Bistro
- Prepared for Glass
- Prism
- Shadow

Etched Glass
- Crossroads
- Lisbon
- Modern Frosted Insert
- Prairie
- Satina

Layered Glass
- Antiquity
- Mirage
- Silk
- Wintersday

Mullion Doors
- Ambry ★
- Castlegate ★
- Evansville ★
- Hewitt ★
- Palladia ★
- Raleigh ★
- Showcase Mullion ★
- Traditional Mullion ★

Specialty Inserts
- Chalkboard Insert
- Leather Insert

Textured Glass
- Cascade
- Dolace
- Modern Textured Insert
- Moire
- Ravenna
- Styx
- Vauxhall

★ ***Not*** available in EverCore™ door styles

Avery Finishes

❖ *Available as Standard*
● *Premium Upcharge*

		AW1	MLD1	ML1
		Avery Cherry	Avery EverCore™	Avery Maple
Aged Concrete	E06			●
Aged Papyrus	E05			●
Aged River Rock	E07			●
Autumn Blush	AB	❖		
Autumn Blush Suede	C21	●		
Baltic	D78	❖		
Baltic Suede	D80	●		
Biscotti	BO		●	●
Biscotti Suede	D36		●	●
Bonsai	E69		●	●
Bonsai Suede	E70		●	●
Burmese	E67		●	●
Burmese Suede	E68		●	●
Cabernet	CT	❖		❖
Cabernet Suede	C80	●		●
Cannon Grey	D81	❖		
Cannon Grey Suede	D83	●		
Canvas	CV		●	●
Canvas Suede	D37		●	●
Chai	C29		●	●
Chai Suede	D39		●	●
Chestnut	CN			❖
Chestnut Suede	C23			●
Chocolate	CC	❖		❖
Chocolate Suede	D87	●		●
Cinnamon	CA	❖		❖
Cinnamon Suede	C74	●		●
Cognac	CO	❖		❖
Cognac Suede	D85	●		●
Dove White	DW		●	●
Dove White Suede	D40		●	●
Ginger	C88	❖		❖
Ginger Suede	C19	●		●
Greyloft	B65		●	●
Greyloft Suede	D41		●	●
Hazel	C16	❖		
Hazel Suede	C17	●		
Honey Spice	HS	❖		❖
Honey Spice Suede	D88	●		●
Husk	B82	❖		
Husk Suede	C13	●		
Kaffé	KA	❖		❖
Kaffé Suede	C27	●		●
Lagoon	E63		●	●
Lagoon Suede	E64		●	●
Linen	D90		●	●
Linen Suede	D93		●	●
Midnight	B69		●	●
Midnight Suede	D42		●	●
Molasses	E58	❖		❖
Molasses Suede	E59	●		●
Moonshine	D98		●	●
Moonshine Suede	E02		●	●
Mushroom	A11		●	●
Mushroom Suede	D43		●	●
Natural	NA	❖		❖
Natural Suede	D89	●		●
Onyx	A21		●	●
Onyx Suede	D44		●	●
Pebble Grey	B83		●	●
Pebble Grey Suede	D45		●	●
Peppercorn	PC	❖		❖
Peppercorn Suede	D53	●		●
Praline	PR	❖		❖

		AW1	MLD1	ML1
		Avery Cherry	Avery EverCore™	Avery Maple
Praline Suede	C78	●		●
Saddle	B81	❖		❖
Saddle Suede	C12	●		●
Slate	B64	❖		❖
Slate Suede	C72	●		●
Sunset	SU	❖		
Sunset Suede	D49	●		
Surfside	E65		●	●
Surfside Suede	E66		●	●
Unfinished	UF	❖		❖

Barnet

Full Overlay

AH9C1	Crafted Cherry	Price Column M
AH9M1	Crafted Maple	Price Column K
AH9O1	Crafted Oak	Price Column J

Scan to view all Barnet doors

Full Overlay

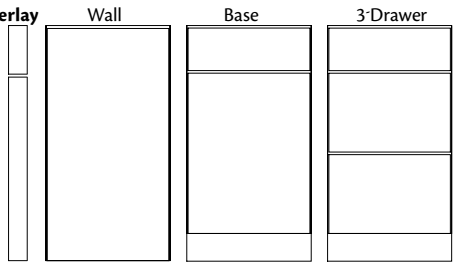

- Quartersawn veneer slab on wall and base doors
- Quartersawn veneer slab drawer fronts
- Wood grain orientation on door and drawer fronts is vertical; ***not*** book matched between pieces
- Concealed hinge
- Decorative hardware is required
- ***Note***: Frame and End Panels of cabinets are supplied in plain-sawn corresponding material. For a more uniform look, consider using a decorative door to conceal exposed cabinet ends.
- ***Note***: Crafted doors are made from an engineered hardwood veneer to emulate the look of real Quartersawn Cherry, Maple or Oak. This material offers a more consistent color and grain pattern

Decorative Doors & Inserts Available

Aluminum Frame Glass
- Fresco Brushed Aluminum
- Vetro Brushed Aluminum

Camed Glass
- Chateau
- Classic Camed Insert
- Palisades
- Penrose
- Victorian
- Yorkshire

Classic Glass
- Bistro
- Prepared for Glass
- Prism
- Shadow

Etched Glass
- Crossroads
- Lisbon
- Modern Frosted Insert
- Prairie
- Satina

Layered Glass
- Antiquity
- Mirage
- Silk
- Wintersday

Specialty Inserts
- Chalkboard Insert
- Leather Insert

Textured Glass
- Cascade
- Dolace
- Modern Textured Insert
- Moire
- Ravenna
- Styx
- Vauxhall

Barnet Finishes

❖ *Available as Standard*
● *Premium Upcharge*

		AH9C1 Barnet Crafted Cherry	AH9M1 Barnet Crafted Maple	AH9O1 Barnet Crafted Oak
Autumn Blush	AB	❖		❖
Autumn Blush Suede	C21	●		●
Baltic	D78	❖		❖
Baltic Suede	D80	●		●
Cabernet	CT	❖	❖	
Cabernet Suede	C80	●	●	
Cannon Grey	D81	❖		❖
Cannon Grey Suede	D83	●		●
Chestnut	CN		❖	
Chestnut Suede	C23		●	
Chocolate	CC	❖	❖	
Chocolate Suede	D87	●	●	
Cinnamon	CA	❖	❖	
Cinnamon Suede	C74	●	●	
Cognac	CO	❖	❖	❖
Cognac Suede	D85	●	●	●
Fawn	FN			❖
Fawn Suede	D51			●
Ginger	C88	❖	❖	❖
Ginger Suede	C19	●	●	●
Hazel	C16	❖		❖
Hazel Suede	C17	●		●
Honey Spice	HS	❖	❖	❖
Honey Spice Suede	D88	●	●	●
Husk	B82	❖		❖
Husk Suede	C13	●		●
Kaffé	KA	❖	❖	❖
Kaffé Suede	C27	●	●	●
Molasses	E58	❖	❖	❖
Molasses Suede	E59	●	●	●
Natural	NA	❖	❖	❖
Natural Suede	D89	●	●	●
Peppercorn	PC	❖	❖	❖
Peppercorn Suede	D53	●	●	●
Praline	PR	❖	❖	❖
Praline Suede	C78	●	●	●
Saddle	B81	❖	❖	❖
Saddle Suede	C12	●	●	●
Slate	B64	❖	❖	❖
Slate Suede	C72	●	●	●
Sunset	SU	❖		
Sunset Suede	D49	●		
Unfinished	UF	❖	❖	❖

Belmont

Scan to view all Belmont doors

1/2" Overlay

2WX1	Hickory Roman	Price Column C
2WT1	Hickory Square	Price Column C
2AY1	Maple Roman	Price Column D
2GV1	Maple Square	Price Column D
2ABN1	Oak Roman	Price Column C
2BN1	Oak Square	Price Column C

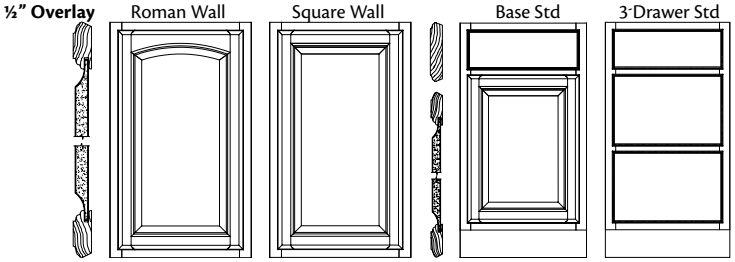

- Solid wood door frame with 2 3/16" stiles and rails
- Square design has veneer raised panel on wall and base doors
- Roman design has arched veneer raised panels on wall doors only; base doors will be square
- Reverse bevel lip
- Slab drawer front
- Concealed or optional knife hinge
- Decorative hardware is optional

Decorative Doors & Inserts Available

Camed Glass
- Chateau
- Palisades
- Penrose
- Victorian
- Yorkshire

Classic Glass
- Bistro
- Prepared for Glass
- Prism ★
- Shadow

Etched Glass
- Crossroads
- Lisbon
- Prairie
- Satina

Layered Glass
- Antiquity
- Mirage
- Silk
- Wintersday

Mullion Doors
- Showcase Mullion
- Traditional Mullion

Specialty Inserts
- Chalkboard Insert
- Leather Insert

Textured Glass
- Cascade
- Dolace
- Moire
- Ravenna
- Styx
- Vauxhall

★ ***Not*** available in Roman door styles

Belmont Finishes

❖ *Available as Standard*
● *Premium Upcharge*

		2WX1 Belmont Hickory Roman	2WT1 Belmont Hickory Square	2AY1 Belmont Maple Roman	2GV1 Belmont Maple Square	2ABN1 Belmont Oak Roman	2BN1 Belmont Oak Square
Autumn Blush	AB					❖	❖
Autumn Blush Suede	C21					●	●
Autumn Blush W/Onyx Glaze Suede	E10					●	●
Autumn Blush W/Onyx Glaze	A56					●	●
Baltic	D78					❖	❖
Baltic Suede	D80					●	●
Biscotti	BO			●	●		
Biscotti Suede	D36			●	●		
Biscotti W/Cinder Glaze Suede	E24			●	●		
Biscotti W/Cocoa Glaze Suede	E25			●	●		
Biscotti W/Cinder Glaze	B91			●	●		
Biscotti W/Cocoa Glaze	IG			●	●		
Bonsai	E69			●	●		
Bonsai Suede	E70			●	●		
Burmese	E67			●	●		
Burmese Suede	E68			●	●		
Cabernet	CT			❖	❖		
Cabernet Suede	C80			●	●		
Cannon Grey	D81					❖	❖
Cannon Grey Suede	D83					●	●
Canvas	CV			●	●		
Canvas Suede	D37			●	●		
Canvas W/Cinder Glaze Suede	E26			●	●		
Canvas W/Cocoa Glaze Suede	E27			●	●		
Canvas W/Cinder Glaze	B90			●	●		
Canvas W/Cocoa Glaze	VG			●	●		
Chai	C29			●	●		
Chai Suede	D39			●	●		
Chai W/Cinder Glaze Suede	E28			●	●		
Chai W/Cocoa Glaze Suede	E29			●	●		
Chai W/Cinder Glaze	C32			●	●		
Chai W/Cocoa Glaze	C30			●	●		
Chestnut	CN			❖	❖		
Chestnut Suede	C23			●	●		
Chestnut W/Onyx Glaze Suede	E12			●	●		
Chestnut W/Onyx Glaze	A54			●	●		
Chocolate	CC			❖	❖		
Chocolate Suede	D87			●	●		
Cinnamon	CA			❖	❖		
Cinnamon Suede	C74			●	●		
Cinnamon W/Onyx Glaze Suede	E14			●	●		
Cinnamon W/Onyx Glaze	A48			●	●		
Cognac	CO	❖	❖	❖	❖	❖	❖
Cognac Suede	D85	●	●	●	●	●	●
Dove White	DW			●	●		
Dove White Suede	D40			●	●		
Dove White W/Cinder Glaze Suede	E30			●	●		
Dove White W/Cocoa Glaze Suede	E31			●	●		
Dove White W/Cinder Glaze	B89			●	●		
Dove White W/Cocoa Glaze	A15			●	●		
Fawn	FN					❖	❖
Fawn Suede	D51					●	●
Ginger	C88	❖	❖	❖	❖	❖	❖
Ginger Suede	C19	●	●	●	●	●	●
Ginger W/Sable Glaze Suede	E15	●	●	●	●	●	●
Ginger W/Sable Glaze	C11	●	●	●	●	●	●
Greyloft	B65			●	●		
Greyloft Suede	D41			●	●		
Greyloft W/Sable Glaze Suede	E32			●	●		

		2WX1 Belmont Hickory Roman	2WT1 Belmont Hickory Square	2AY1 Belmont Maple Roman	2GV1 Belmont Maple Square	2ABN1 Belmont Oak Roman	2BN1 Belmont Oak Square
Greyloft W/Sable Glaze	B66			●	●		
Hazel	C16	❖	❖			❖	❖
Hazel Suede	C17	●	●			●	●
Honey Spice	HS	❖	❖	❖	❖	❖	❖
Honey Spice Suede	D88	●	●	●	●	●	●
Husk	B82	❖	❖			❖	❖
Husk Suede	C13	●	●			●	●
Kaffé	KA	❖	❖	❖	❖	❖	❖
Kaffé Suede	C27	●	●	●	●	●	●
Lagoon	E63			●	●		
Lagoon Suede	E64			●	●		
Linen	D90			●	●		
Linen Suede	D93			●	●		
Linen W/Cinder Glaze Suede	E33			●	●		
Linen W/Cocoa Glaze Suede	E34			●	●		
Linen W/Cinder Glaze	D96			●	●		
Linen W/Cocoa Glaze	D94			●	●		
Midnight	B69			●	●		
Midnight Suede	D42			●	●		
Midnight W/Onyx Glaze Suede	E35			●	●		
Midnight W/Onyx Glaze	B70			●	●		
Molasses	E58	❖	❖	❖	❖	❖	❖
Molasses Suede	E59	●	●	●	●	●	●
Moonshine	D98			●	●		
Moonshine Suede	E02			●	●		
Moonshine W/Cinder Glaze Suede	E36			●	●		
Moonshine W/Cocoa Glaze Suede	E37			●	●		
Moonshine W/Cinder Glaze	E04			●	●		
Moonshine W/Cocoa Glaze	E03			●	●		
Mushroom	A11			●	●		
Mushroom Suede	D43			●	●		
Mushroom W/Cinder Glaze Suede	E38			●	●		
Mushroom W/Cocoa Glaze Suede	E39			●	●		
Mushroom W/Cinder Glaze	B92			●	●		
Mushroom W/Cocoa Glaze	A12			●	●		
Natural	NA	❖	❖	❖	❖	❖	❖
Natural Suede	D89	●	●	●	●	●	●
Onyx	A21			●	●	●	●
Onyx Suede	D44			●	●	●	●
Pebble Grey	B83			●	●		
Pebble Grey Suede	D45			●	●		
Pebble Grey W/Cocoa Glaze Suede	E40			●	●		
Pebble Grey W/Cocoa Glaze	B84			●	●		
Peppercorn	PC			❖	❖	❖	❖
Peppercorn Suede	D53			●	●	●	●
Praline	PR	❖	❖	❖	❖	❖	❖
Praline Suede	C78	●	●	●	●	●	●
Praline W/Onyx Glaze Suede	E16	●	●	●	●		
Praline W/Onyx Glaze	A45	●	●	●	●		
Saddle	B81	❖	❖	❖	❖	❖	❖
Saddle Suede	C12	●	●	●	●	●	●
Slate	B64	❖	❖	❖	❖	❖	❖
Slate Suede	C72	●	●	●	●	●	●
Sunset	SU	❖	❖				
Sunset Suede	D49	●	●				
Surfside	E65			●	●		
Surfside Suede	E66			●	●		
Unfinished	UF	❖	❖	❖	❖	❖	❖

Brookfield

Scan to view all Brookfield doors

Full Overlay

BWB1	Birch	Price Column G
BWC1	Cherry	Price Column M
BWDD1	EverCore™	Price Column I
BWH1	Hickory	Price Column G
BWM1	Maple	Price Column K
SMG1	Oak	Price Column G

Grey color coding indicates new product, size or code.

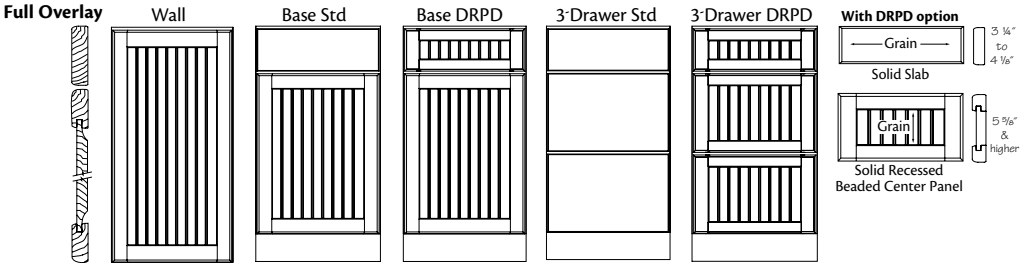

- Solid wood door frame with 2 1/4″ stiles and rails, except EverCore™, which will be mechanically compressed wood fiber
- Square solid beaded recessed panel on wall and base doors, except EverCore™, which will be mechanically compressed wood fiber
- Grooves are 1 1/2″ on center
- Slab drawer front
- Deluxe Recessed Panel Drawer (DRPD) front available
- Concealed hinge
- Decorative hardware is required

Decorative Doors & Inserts Available

Aluminum Frame Glass
- Fresco Brushed Aluminum
- Vetro Brushed Aluminum

Camed Glass
- Chateau
- Classic Camed Insert
- Palisades
- Penrose
- Victorian
- Yorkshire

Classic Glass
- Bistro
- Prepared for Glass
- Prism
- Shadow

Etched Glass
- Crossroads
- Lisbon
- Modern Frosted Insert
- Prairie
- Satina

Layered Glass
- Antiquity
- Mirage
- Silk
- Wintersday

Mullion Doors
- Ambry★
- Castlegate★
- Evansville★
- Hewitt ★
- Palladia ▲★
- Raleigh ▲★
- Showcase Mullion★
- Traditional Mullion★

Specialty Inserts
- Chalkboard Insert
- Leather Insert

Textured Glass
- Cascade
- Dolace
- Modern Textured Insert
- Moire
- Ravenna
- Styx
- Vauxhall

▲ Only available in Cherry & Maple door styles
★ ***Not*** available in Evercore™ door styles

Brookfield Finishes

❖ *Available as Standard*
● *Premium Upcharge*

		BWB1 Brookfield Birch	BWC1 Brookfield Cherry	BWDD1 Brookfield EverCore	BWH1 Brookfield Hickory	BWM1 Brookfield Maple	SMG1 Brookfield Oak
Aged Concrete	E06					●	
Aged Papyrus	E05					●	
Aged River Rock	E07					●	
Autumn Blush	AB		❖				❖
Autumn Blush Suede	C21		●				●
Autumn Blush W/Onyx Glaze Suede	E10		●				●
Autumn Blush W/Onyx Glaze	A56		●				●
Baltic	D78		❖				❖
Baltic Suede	D80		●				●
Biscotti	BO			●		●	
Biscotti Suede	D36			●		●	
Biscotti W/Cinder Glaze Suede	E24					●	
Biscotti W/Cocoa Glaze Suede	E25					●	
Biscotti W/Cinder Glaze	B91					●	
Biscotti W/Cocoa Glaze	IG					●	
Bonsai	E69			●		●	
Bonsai Suede	E70			●		●	
Burmese	E67			●		●	
Burmese Suede	E68			●		●	
Burnished Autumn Blush	BA		●				
Burnished Autumn Blush Suede	E17		●				
Burnished Cabernet	BT		●				
Burnished Cabernet Suede	E18		●				
Burnished Chestnut	BH					●	
Burnished Chestnut Suede	E19					●	
Burnished Chocolate	BL		●				
Burnished Chocolate Suede	E20		●				
Burnished Cinnamon	A51	●	●			●	
Burnished Cinnamon Suede	E21	●	●			●	
Burnished Ginger	BE	●	●			●	
Burnished Ginger Suede	E22	●	●			●	
Burnished Praline	BP	●			●	●	
Burnished Praline Suede	E23	●			●	●	
Cabernet	CT	❖	❖			❖	
Cabernet Suede	C80	●	●			●	
Cabernet W/Onyx Glaze Suede	E11		●				
Cabernet W/Onyx Glaze	A58		●				
Cannon Grey	D81		❖				❖
Cannon Grey Suede	D83		●				●
Canvas	CV			●		●	
Canvas Suede	D37			●		●	
Canvas W/Cinder Glaze Suede	E26					●	
Canvas W/Cocoa Glaze Suede	E27					●	
Canvas W/Cinder Glaze	B90					●	
Canvas W/Cocoa Glaze	VG					●	
Chai	C29			●		●	
Chai Suede	D39			●		●	
Chai W/Cinder Glaze Suede	E28					●	
Chai W/Cocoa Glaze Suede	E29					●	
Chai W/Cinder Glaze	C32					●	
Chai W/Cocoa Glaze	C30					●	
Chestnut	CN	❖				❖	
Chestnut Suede	C23	●				●	
Chestnut W/Onyx Glaze Suede	E12					●	
Chestnut W/Onyx Glaze	A54					●	
Chocolate	CC	❖	❖			❖	
Chocolate Suede	D87	●	●			●	
Chocolate W/Ebony Glaze	EG		●				
Chocolate W/Ebony Glaze Suede	E13		●				
Cinnamon	CA	❖	❖			❖	
Cinnamon Suede	C74	●	●			●	
Cinnamon W/Onyx Glaze Suede	E14		●			●	
Cinnamon W/Onyx Glaze	A48		●			●	
Cognac	CO	❖	❖		❖	❖	❖
Cognac Suede	D85	●	●		●	●	●

		BWB1 Brookfield Birch	BWC1 Brookfield Cherry	BWDD1 Brookfield EverCore	BWH1 Brookfield Hickory	BWM1 Brookfield Maple	SMG1 Brookfield Oak
Distressed Autumn Blush	C22		●				●
Distressed Baltic	D79		●				●
Distressed Cabernet	C87	●	●			●	
Distressed Cannon Grey	D82		●				●
Distressed Chestnut	C24	●				●	
Distressed Chocolate	D86	●	●			●	
Distressed Cinnamon	C75	●	●			●	
Distressed Cognac	D84	●	●		●	●	●
Distressed Fawn	D52						●
Distressed Ginger	C20	●	●		●	●	●
Distressed Hazel	C18	●	●		●	●	●
Distressed Husk	C15	●	●		●	●	●
Distressed Kaffé	C28	●	●		●	●	●
Distressed Molasses	E60	●	●		●	●	●
Distressed Peppercorn	C86		●			●	●
Distressed Praline	C79	●	●		●	●	●
Distressed Saddle	C14	●	●		●	●	●
Distressed Slate	C73	●	●		●	●	●
Distressed Sunset	D50		●		●		
Dove White	DW			●		●	
Dove White Suede	D40			●		●	
Dove White W/Cinder Glaze Suede	E30					●	
Dove White W/Cocoa Glaze Suede	E31					●	
Dove White W/Cinder Glaze	B89					●	
Dove White W/Cocoa Glaze	A15					●	
Fawn	FN						❖
Fawn Suede	D51						●
Ginger	C88	❖	❖		❖	❖	❖
Ginger Suede	C19	●	●		●	●	●
Ginger W/Sable Glaze Suede	E15	●	●		●	●	●
Ginger W/Sable Glaze	C11	●	●		●	●	●
Greyloft	B65			●		●	
Greyloft Suede	D41			●		●	
Greyloft W/Sable Glaze Suede	E32					●	
Greyloft W/Sable Glaze	B66					●	
Hazel	C16	❖	❖		❖		❖
Hazel Suede	C17	●	●		●		●
Honey Spice	HS	❖	❖		❖	❖	❖
Honey Spice Suede	D88	●	●		●	●	●
Husk	B82	❖	❖		❖		❖
Husk Suede	C13	●	●		●		●
Kaffé	KA	❖	❖		❖	❖	❖
Kaffé Suede	C27	●	●		●	●	●
Lagoon	E63			●		●	
Lagoon Suede	E64			●		●	
Linen	D90			●		●	
Linen Suede	D93			●		●	
Linen W/Cinder Glaze Suede	E33					●	
Linen W/Cocoa Glaze Suede	E34					●	
Linen W/Cinder Glaze	D96					●	
Linen W/Cocoa Glaze	D94					●	
Midnight	B69			●		●	
Midnight Suede	D42			●		●	
Midnight W/Onyx Glaze Suede	E35					●	
Midnight W/Onyx Glaze	B70					●	
Molasses	E58	❖	❖		❖	❖	❖
Molasses Suede	E59	●	●		●	●	●
Moonshine	D98			●		●	
Moonshine Suede	E02			●		●	
Moonshine W/Cinder Glaze Suede	E36					●	
Moonshine W/Cocoa Glaze Suede	E37					●	
Moonshine W/Cinder Glaze	E04					●	
Moonshine W/Cocoa Glaze	E03					●	
Mushroom	A11			●		●	
Mushroom Suede	D43			●		●	

Continued on next page

Brookfield Finishes Continued

❖ *Available as Standard*
● *Premium Upcharge*

		BWB1	BWC1	BWDD1	BWH1	BWM1	SMG1
		Brookfield Birch	Brookfield Cherry	Brookfield EverCore	Brookfield Hickory	Brookfield Maple	Brookfield Oak
Mushroom W/Cinder Glaze Suede	E38					●	
Mushroom W/Cocoa Glaze Suede	E39					●	
Mushroom W/Cinder Glaze	B92					●	
Mushroom W/Cocoa Glaze	A12					●	
Natural	NA	❖	❖		❖	❖	❖
Natural Suede	D89	●	●		●	●	●
Onyx	A21			●		●	●
Onyx Suede	D44			●		●	●
Pebble Grey	B83			●		●	
Pebble Grey Suede	D45			●		●	
Pebble Grey W/Cocoa Glaze Suede	E40					●	
Pebble Grey W/Cocoa Glaze	B84					●	
Peppercorn	PC		❖			❖	❖
Peppercorn Suede	D53		●			●	●
Praline	PR	❖	❖		❖	❖	❖
Praline Suede	C78	●	●		●	●	●
Praline W/Onyx Glaze Suede	E16				●	●	
Praline W/Onyx Glaze	A45				●	●	
Saddle	B81	❖	❖		❖	❖	❖
Saddle Suede	C12	●	●		●	●	●
Slate	B64	❖	❖		❖	❖	❖
Slate Suede	C72	●	●		●	●	●
Sunset	SU		❖		❖		
Sunset Suede	D49		●		●		
Surfside	E65			●		●	
Surfside Suede	E66			●		●	
Unfinished	UF	❖	❖		❖	❖	❖
Vintage Biscotti	VS		●				
Vintage Biscotti Suede	E41		●				
Vintage Canvas	VC		●				
Vintage Canvas Suede	E42		●				
Vintage Chai	C35		●				
Vintage Chai Suede	E43		●				
Vintage Dove White	VD		●				
Vintage Dove White Suede	E44		●				
Vintage Greyloft	B67		●				
Vintage Greyloft Suede	E45		●				
Vintage Linen	D91		●				
Vintage Linen Suede	E46		●				
Vintage Midnight	B71		●				
Vintage Midnight Suede	E47		●				
Vintage Moonshine	D99		●				
Vintage Moonshine Suede	E48		●				
Vintage Mushroom	A13		●				
Vintage Mushroom Suede	E49		●				
Vintage Onyx	VO		●				
Vintage Onyx Suede	E50		●				
Vintage Pebble Grey	B86		●				
Vintage Pebble Grey Suede	E51		●				

Camby

Full Overlay

AH3L1 Cannon Grey Wood-Grain Foil — Price Column E

AH3W1 Dove White Wood-Grain Foil — Price Column E

Scan to view all Camby doors

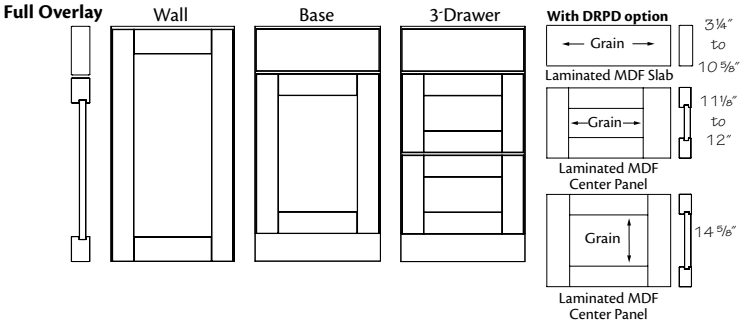

- Thermofoil door with 3 1/8" stiles and rails
- Recessed center panel door with vertical grain orientation
- Five-piece mortise and tenon door design with foil wrapped lineal pieces and banded edges
- Doors on 6" wide cabinets will be a slab design with vertical grain orientation
- Drawer fronts 3 1/4" to 10 5/8" will be slab
- Drawer fronts 11 1/8" to 14 5/8" will be five-piece
- Concealed hinge
- Decorative hardware is required
- ***Note***: Cabinet box and most accessories will have a coordinating smooth white finish for Dove White Wood-Grain Foil or an oak texture finish for Cannon Grey Wood-Grain Foil door styles; select accessories will be offered in matching foil material (refer to individual items for specific details)

Decorative Doors & Inserts Available

Aluminum Frame Glass
- Fresco Brushed Aluminum
- Vetro Brushed Aluminum

Camed Glass
- Chateau
- Classic Camed Insert
- Palisades
- Penrose
- Victorian
- Yorkshire

Classic Glass
- Bistro
- Prepared for Glass
- Prism
- Shadow

Etched Glass
- Crossroads
- Lisbon
- Modern Frosted Insert
- Prairie
- Satina

Layered Glass
- Antiquity
- Mirage
- Silk
- Wintersday

Specialty Inserts
- Chalkboard Insert
- Leather Insert

Textured Glass
- Cascade
- Dolace
- Modern Textured Insert
- Moire
- Ravenna
- Styx
- Vauxhall

Camby Finishes

❖ *Available as Standard*
● *Premium Upcharge*

		Camby Cannon Grey AH3L1	Camby Dove White AH3W1
Cannon Grey Wood Grain	D81O	❖	
Dove White Wood Grain	WH		❖

New Chanlott

Full Overlay

AJ3C1	Cherry	Price Column O
AJ3M1	Maple	Price Column M

Scan to view all Chanlott doors

Grey color coding indicates new product, size or code.

Full Overlay

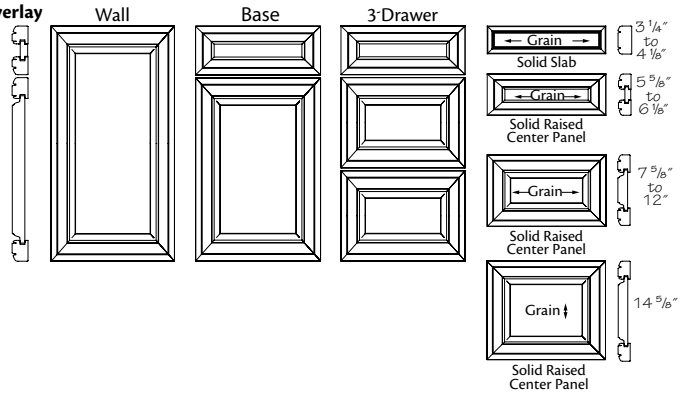

- Solid wood mitered door frame with 2 5/8" stiles and rails
- Square solid raised panel on wall and base doors
- Five-piece drawer front
- 5 5/8" and 6 1/8" high drawer fronts have 2 1/4" stiles and rails
- Concealed hinge
- Decorative hardware is required

Decorative Doors & Inserts Available

Aluminum Frame Glass
- Fresco Brushed Aluminum
- Vetro Brushed Aluminum

Camed Glass
- Chateau
- Classic Camed Insert
- Palisades
- Penrose
- Victorian
- Yorkshire

Classic Glass
- Bistro
- Prepared for Glass
- Prism
- Shadow

Etched Glass
- Crossroads
- Lisbon
- Modern Frosted Insert
- Prairie
- Satina

Layered Glass
- Antiquity
- Mirage
- Silk
- Wintersday

Mullion Doors
- Ambry
- Castlegate
- Evansville
- Hewitt
- Showcase Mullion
- Traditional Mullion

Specialty Inserts
- Chalkboard Insert
- Leather Insert

Textured Glass
- Cascade
- Dolace
- Modern Textured Insert
- Moire
- Ravenna
- Styx
- Vauxhall

Chanlott Finishes

❖ *Available as Standard*
● *Premium Upcharge*

		Chanlott Cherry AJ3C1	Chanlott Maple AJ3M1
Aged Concrete	E06		●
Aged Papyrus	E05		●
Aged River Rock	E07		●
Autumn Blush	AB	❖	
Autumn Blush Suede	C21	●	
Autumn Blush W/Onyx Glaze Suede	E10	●	
Autumn Blush W/Onyx Glaze	A56	●	
Baltic	D78	❖	
Baltic Suede	D80	●	
Biscotti	BO		●
Biscotti Suede	D36		●
Biscotti W/Cinder Glaze Suede	E24		●
Biscotti W/Cocoa Glaze Suede	E25		●
Biscotti W/Cinder Glaze	B91		●
Biscotti W/Cocoa Glaze	IG		●
Bonsai	E69		●
Bonsai Suede	E70		●
Burmese	E67		●
Burmese Suede	E68		●
Burnished Autumn Blush	BA	●	
Burnished Autumn Blush Suede	E17	●	
Burnished Cabernet	BT	●	
Burnished Cabernet Suede	E18	●	
Burnished Chestnut	BH		●
Burnished Chestnut Suede	E19		●
Burnished Chocolate	BL	●	
Burnished Chocolate Suede	E20	●	
Burnished Cinnamon	A51	●	●
Burnished Cinnamon Suede	E21	●	●
Burnished Ginger	BE	●	●
Burnished Ginger Suede	E22	●	●
Burnished Praline	BP		●
Burnished Praline Suede	E23		●
Cabernet	CT	❖	❖
Cabernet Suede	C80	●	●
Cabernet W/Onyx Glaze Suede	E11	●	
Cabernet W/Onyx Glaze	A58	●	
Cannon Grey	D81	❖	
Cannon Grey Suede	D83	●	
Canvas	CV		●
Canvas Suede	D37		●
Canvas W/Cinder Glaze Suede	E26		●
Canvas W/Cocoa Glaze Suede	E27		●
Canvas W/Cinder Glaze	B90		●
Canvas W/Cocoa Glaze	VG		●
Chai	C29		●
Chai Suede	D39		●
Chai W/Cinder Glaze Suede	E28		●
Chai W/Cocoa Glaze Suede	E29		●
Chai W/Cinder Glaze	C32		●
Chai W/Cocoa Glaze	C30		●
Chestnut	CN		❖
Chestnut Suede	C23		●
Chestnut W/Onyx Glaze Suede	E12		●
Chestnut W/Onyx Glaze	A54		●
Chocolate	CC	❖	❖
Chocolate Suede	D87	●	●
Chocolate W/Ebony Glaze	EG	●	
Chocolate W/Ebony Glaze Suede	E13	●	
Cinnamon	CA	❖	❖
Cinnamon Suede	C74	●	●
Cinnamon W/Onyx Glaze Suede	E14	●	●
Cinnamon W/Onyx Glaze	A48	●	●
Cognac	CO	❖	❖
Cognac Suede	D85	●	●
Distressed Autumn Blush	C22	●	
Distressed Baltic	D79	●	
Distressed Cabernet	C87	●	●
Distressed Cannon Grey	D82	●	
Distressed Chestnut	C24		●
Distressed Chocolate	D86	●	●
Distressed Cinnamon	C75	●	●
Distressed Cognac	D84	●	●
Distressed Ginger	C20	●	●
Distressed Hazel	C18	●	●
Distressed Husk	C15	●	●
Distressed Kaffé	C28	●	●
Distressed Molasses	E60	●	●
Distressed Peppercorn	C86	●	●
Distressed Praline	C79	●	●
Distressed Saddle	C14	●	●
Distressed Slate	C73	●	●
Distressed Sunset	D50	●	
Dove White	DW		●
Dove White Suede	D40		●
Dove White W/Cinder Glaze Suede	E30		●
Dove White W/Cocoa Glaze Suede	E31		●
Dove White W/Cinder Glaze	B89		●
Dove White W/Cocoa Glaze	A15		●
Ginger	C88	❖	❖
Ginger Suede	C19	●	●
Ginger W/Sable Glaze Suede	E15	●	●
Ginger W/Sable Glaze	C11	●	●
Greyloft	B65		●
Greyloft Suede	D41		●
Greyloft W/Sable Glaze Suede	E32		●
Greyloft W/Sable Glaze	B66		●
Hazel	C16	❖	
Hazel Suede	C17	●	
Honey Spice	HS	❖	❖
Honey Spice Suede	D88	●	●
Husk	B82	❖	
Husk Suede	C13	●	
Kaffé	KA	❖	❖
Kaffé Suede	C27	●	●
Lagoon	E63		●
Lagoon Suede	E64		●
Linen	D90		●
Linen Suede	D93		●
Linen W/Cinder Glaze Suede	E33		●
Linen W/Cocoa Glaze Suede	E34		●
Linen W/Cinder Glaze	D96		●
Linen W/Cocoa Glaze	D94		●
Midnight	B69		●
Midnight Suede	D42		●
Midnight W/Onyx Glaze Suede	E35		●
Midnight W/Onyx Glaze	B70		●
Molasses	E58	❖	❖
Molasses Suede	E59	●	●
Moonshine	D98		●
Moonshine Suede	E02		●
Moonshine W/Cinder Glaze Suede	E36		●

Continued on next page

Chanlott Finishes Continued

❖ *Available as Standard*
● *Premium Upcharge*

		AJ3C1 Chanlott Cherry	AJ3M1 Chanlott Maple
Moonshine W/Cocoa Glaze Suede	E37		●
Moonshine W/Cinder Glaze	E04		●
Moonshine W/Cocoa Glaze	E03		●
Mushroom	A11		●
Mushroom Suede	D43		●
Mushroom W/Cinder Glaze Suede	E38		●
Mushroom W/Cocoa Glaze Suede	E39		●
Mushroom W/Cinder Glaze	B92		●
Mushroom W/Cocoa Glaze	A12		●
Natural	NA	❖	❖
Natural Suede	D89	●	●
Onyx	A21		●
Onyx Suede	D44		●
Pebble Grey	B83		●
Pebble Grey Suede	D45		●
Pebble Grey W/Cocoa Glaze Suede	E40		●
Pebble Grey W/Cocoa Glaze	B84		●
Peppercorn	PC	❖	❖
Peppercorn Suede	D53	●	●
Praline	PR	❖	❖
Praline Suede	C78	●	●
Praline W/Onyx Glaze Suede	E16		●
Praline W/Onyx Glaze	A45		●
Saddle	B81	❖	❖
Saddle Suede	C12	●	●
Slate	B64	❖	❖
Slate Suede	C72	●	●
Sunset	SU	❖	
Sunset Suede	D49	●	
Surfside	E65		●
Surfside Suede	E66		●
Unfinished	UF	❖	❖
Vintage Biscotti	VS	●	
Vintage Biscotti Suede	E41	●	
Vintage Canvas	VC	●	
Vintage Canvas Suede	E42	●	
Vintage Chai	C35	●	
Vintage Chai Suede	E43	●	
Vintage Dove White	VD	●	
Vintage Dove White Suede	E44	●	
Vintage Greyloft	B67	●	
Vintage Greyloft Suede	E45	●	
Vintage Linen	D91	●	
Vintage Linen Suede	E46	●	
Vintage Midnight	B71	●	
Vintage Midnight Suede	E47	●	
Vintage Moonshine	D99	●	
Vintage Moonshine Suede	E48	●	
Vintage Mushroom	A13	●	
Vintage Mushroom Suede	E49	●	
Vintage Onyx	VO	●	
Vintage Onyx Suede	E50	●	
Vintage Pebble Grey	B86	●	
Vintage Pebble Grey Suede	E51	●	

Cornell

Full Overlay

AC1C1 Cherry Price Column K
AC1M1 Maple Price Column J

Scan to view all Cornell doors

Full Overlay

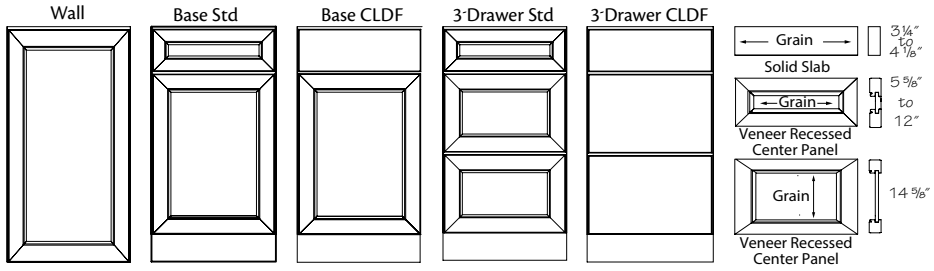

- Solid wood mitered door frame with 2 5/8" stiles and rails
- Square veneer recessed panel on wall and base doors
- Five-piece drawer front
- Classic Drawer Front (CLDF) option available
- Concealed hinge
- Decorative hardware is required
- ***Note***: When CLDF option is applied, all drawer fronts will be slab

Decorative Doors & Inserts Available

Aluminum Frame Glass
- Fresco Brushed Aluminum
- Vetro Brushed Aluminum

Camed Glass
- Chateau
- Classic Camed Insert
- Palisades
- Penrose
- Victorian
- Yorkshire

Classic Glass
- Bistro
- Prepared for Glass
- Prism
- Shadow

Etched Glass
- Crossroads
- Lisbon
- Modern Frosted Insert
- Prairie
- Satina

Layered Glass
- Antiquity
- Mirage
- Silk
- Wintersday

Mullion Doors
- Ambry
- Castlegate
- Evansville
- Hewitt
- Showcase Mullion
- Traditional Mullion

Specialty Inserts
- Chalkboard Insert
- Leather Insert

Textured Glass
- Cascade
- Dolace
- Modern Textured Insert
- Moire
- Ravenna
- Styx
- Vauxhall

Cornell Finishes

❖ *Available as Standard*
● *Premium Upcharge*

		AC1C1 Cornell Cherry	AC1M1 Cornell Maple
Autumn Blush	AB	❖	
Autumn Blush Suede	C21	●	
Autumn Blush W/Onyx Glaze Suede	E10	●	
Autumn Blush W/Onyx Glaze	A56	●	
Baltic	D78	❖	
Baltic Suede	D80	●	
Biscotti	BO		●
Biscotti Suede	D36		●
Biscotti W/Cinder Glaze Suede	E24		●
Biscotti W/Cocoa Glaze Suede	E25		●
Biscotti W/Cinder Glaze	B91		●
Biscotti W/Cocoa Glaze	IG		●
Bonsai	E69		●
Bonsai Suede	E70		●
Burmese	E67		●
Burmese Suede	E68		●
Cabernet	CT	❖	❖
Cabernet Suede	C80	●	●
Cabernet W/Onyx Glaze Suede	E11	●	
Cabernet W/Onyx Glaze	A58	●	
Cannon Grey	D81	❖	
Cannon Grey Suede	D83	●	
Canvas	CV		●
Canvas Suede	D37		●
Canvas W/Cinder Glaze Suede	E26		●
Canvas W/Cocoa Glaze Suede	E27		●
Canvas W/Cinder Glaze	B90		●
Canvas W/Cocoa Glaze	VG		●
Chai	C29		●
Chai Suede	D39		●
Chai W/Cinder Glaze Suede	E28		●
Chai W/Cocoa Glaze Suede	E29		●
Chai W/Cinder Glaze	C32		●
Chai W/Cocoa Glaze	C30		●
Chestnut	CN		❖
Chestnut Suede	C23		●
Chestnut W/Onyx Glaze Suede	E12		●
Chestnut W/Onyx Glaze	A54		●
Chocolate	CC	❖	❖
Chocolate Suede	D87	●	●
Chocolate W/Ebony Glaze	EG	●	
Chocolate W/Ebony Glaze Suede	E13	●	
Cinnamon	CA	❖	❖
Cinnamon Suede	C74	●	●
Cinnamon W/Onyx Glaze Suede	E14	●	●
Cinnamon W/Onyx Glaze	A48	●	●
Cognac	CO	❖	❖
Cognac Suede	D85	●	●
Dove White	DW		●
Dove White Suede	D40		●
Dove White W/Cinder Glaze Suede	E30		●
Dove White W/Cocoa Glaze Suede	E31		●
Dove White W/Cinder Glaze	B89		●
Dove White W/Cocoa Glaze	A15		●
Ginger	C88	❖	❖
Ginger Suede	C19	●	●
Ginger W/Sable Glaze Suede	E15	●	●
Ginger W/Sable Glaze	C11	●	●
Greyloft	B65		●
Greyloft Suede	D41		●
Greyloft W/Sable Glaze Suede	E32		●
Greyloft W/Sable Glaze	B66		●
Hazel	C16	❖	
Hazel Suede	C17	●	
Honey Spice	HS	❖	❖
Honey Spice Suede	D88	●	●
Husk	B82	❖	
Husk Suede	C13	●	
Kaffé	KA	❖	❖
Kaffé Suede	C27	●	●
Lagoon	E63		●
Lagoon Suede	E64		●
Linen	D90		●
Linen Suede	D93		●
Linen W/Cinder Glaze Suede	E33		●
Linen W/Cocoa Glaze Suede	E34		●
Linen W/Cinder Glaze	D96		●
Linen W/Cocoa Glaze	D94		●
Midnight	B69		●
Midnight Suede	D42		●
Midnight W/Onyx Glaze Suede	E35		●
Midnight W/Onyx Glaze	B70		●
Molasses	E58	❖	❖
Molasses Suede	E59	●	●
Moonshine	D98		●
Moonshine Suede	E02		●
Moonshine W/Cinder Glaze Suede	E36		●
Moonshine W/Cocoa Glaze Suede	E37		●
Moonshine W/Cinder Glaze	E04		●
Moonshine W/Cocoa Glaze	E03		●
Mushroom	A11		●
Mushroom Suede	D43		●
Mushroom W/Cinder Glaze Suede	E38		●
Mushroom W/Cocoa Glaze Suede	E39		●
Mushroom W/Cinder Glaze	B92		●
Mushroom W/Cocoa Glaze	A12		●
Natural	NA	❖	❖
Natural Suede	D89	●	●
Onyx	A21		●
Onyx Suede	D44		●
Pebble Grey	B83		●
Pebble Grey Suede	D45		●
Pebble Grey W/Cocoa Glaze Suede	E40		●
Pebble Grey W/Cocoa Glaze	B84		●
Peppercorn	PC	❖	❖
Peppercorn Suede	D53	●	●
Praline	PR	❖	❖
Praline Suede	C78	●	●
Praline W/Onyx Glaze Suede	E16		●
Praline W/Onyx Glaze	A45		●
Saddle	B81	❖	❖
Saddle Suede	C12	●	●
Slate	B64	❖	❖
Slate Suede	C72	●	●
Sunset	SU	❖	
Sunset Suede	D49	●	
Surfside	E65		●
Surfside Suede	E66		●
Unfinished	UF	❖	❖

Courtney

Full Overlay

CRC1	Cherry	Price Column R
CRM1	Maple	Price Column Q

Scan to view all Courtney doors

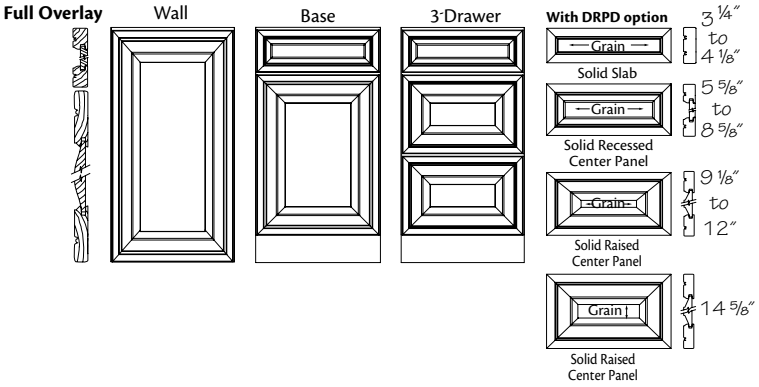

- Solid wood mitered door frame with 3″ stiles and rails
- Drawer front varies depending on height
- Square solid raised panel on wall and base doors
- Concealed hinge
- Decorative hardware is required

Decorative Doors & Inserts Available

Aluminum Frame Glass
- Fresco Brushed Aluminum
- Vetro Brushed Aluminum

Camed Glass
- Chateau
- Classic Camed Insert
- Palisades
- Penrose
- Victorian
- Yorkshire

Classic Glass
- Bistro
- Prepared for Glass
- Prism
- Shadow

Etched Glass
- Crossroads
- Lisbon
- Modern Frosted Insert
- Prairie
- Satina

Layered Glass
- Antiquity
- Mirage
- Silk
- Wintersday

Mullion Doors
- Castlegate
- Evansville
- Hewitt
- Showcase Mullion
- Traditional Mullion

Specialty Inserts
- Chalkboard Insert
- Leather Insert

Textured Glass
- Cascade
- Dolace
- Modern Textured Insert
- Moire
- Ravenna
- Styx
- Vauxhall

Courtney Finishes

❖ *Available as Standard*
● *Premium Upcharge*

		CRC1 Courtney Cherry	CRM1 Courtney Maple
Aged Concrete	E06		●
Aged Papyrus	E05		●
Aged River Rock	E07		●
Autumn Blush	AB	❖	
Autumn Blush Suede	C21	●	
Autumn Blush W/Onyx Glaze Suede	E10	●	
Autumn Blush W/Onyx Glaze	A56	●	
Baltic	D78	❖	
Baltic Suede	D80	●	
Biscotti	BO		●
Biscotti Suede	D36		●
Biscotti W/Cinder Glaze Suede	E24		●
Biscotti W/Cocoa Glaze Suede	E25		●
Biscotti W/Cinder Glaze	B91		●
Biscotti W/Cocoa Glaze	IG		●
Bonsai	E69		●
Bonsai Suede	E70		●
Burmese	E67		●
Burmese Suede	E68		●
Burnished Autumn Blush	BA	●	
Burnished Autumn Blush Suede	E17	●	
Burnished Cabernet	BT	●	
Burnished Cabernet Suede	E18	●	
Burnished Chestnut	BH		●
Burnished Chestnut Suede	E19		●
Burnished Chocolate	BL	●	
Burnished Chocolate Suede	E20	●	
Burnished Cinnamon	A51	●	●
Burnished Cinnamon Suede	E21	●	●
Burnished Ginger	BE	●	●
Burnished Ginger Suede	E22	●	●
Burnished Praline	BP		●
Burnished Praline Suede	E23		●
Cabernet	CT	❖	❖
Cabernet Suede	C80	●	●
Cabernet W/Onyx Glaze Suede	E11	●	
Cabernet W/Onyx Glaze	A58	●	
Cannon Grey	D81	❖	
Cannon Grey Suede	D83	●	
Canvas	CV		●
Canvas Suede	D37		●
Canvas W/Cinder Glaze Suede	E26		●
Canvas W/Cocoa Glaze Suede	E27		●
Canvas W/Cinder Glaze	B90		●
Canvas W/Cocoa Glaze	VG		●
Chai	C29		●
Chai Suede	D39		●
Chai W/Cinder Glaze Suede	E28		●
Chai W/Cocoa Glaze Suede	E29		●
Chai W/Cinder Glaze	C32		●
Chai W/Cocoa Glaze	C30		●
Chestnut	CN		❖
Chestnut Suede	C23		●
Chestnut W/Onyx Glaze Suede	E12		●
Chestnut W/Onyx Glaze	A54		●
Chocolate	CC	❖	❖
Chocolate Suede	D87	●	●
Chocolate W/Ebony Glaze	EG	●	
Chocolate W/Ebony Glaze Suede	E13	●	
Cinnamon	CA	❖	❖
Cinnamon Suede	C74	●	●
Cinnamon W/Onyx Glaze Suede	E14	●	●
Cinnamon W/Onyx Glaze	A48	●	●
Cognac	CO	❖	❖
Cognac Suede	D85	●	●
Distressed Autumn Blush	C22	●	
Distressed Baltic	D79	●	
Distressed Cabernet	C87	●	●
Distressed Cannon Grey	D82	●	
Distressed Chestnut	C24		●
Distressed Chocolate	D86	●	●
Distressed Cinnamon	C75	●	●
Distressed Cognac	D84	●	●
Distressed Ginger	C20	●	●
Distressed Hazel	C18	●	●
Distressed Husk	C15	●	●
Distressed Kaffé	C28	●	●
Distressed Molasses	E60	●	●
Distressed Peppercorn	C86	●	●
Distressed Praline	C79	●	●
Distressed Saddle	C14	●	●
Distressed Slate	C73	●	●
Distressed Sunset	D50	●	
Dove White	DW		●
Dove White High-Gloss	D58		
Dove White Suede	D40		●
Dove White W/Cinder Glaze Suede	E30		●
Dove White W/Cocoa Glaze Suede	E31		●
Dove White W/Cinder Glaze	B89		●
Dove White W/Cocoa Glaze	A15		●
Ginger	C88	❖	❖
Ginger Suede	C19	●	●
Ginger W/Sable Glaze Suede	E15	●	●
Ginger W/Sable Glaze	C11	●	●
Greyloft	B65		●
Greyloft Suede	D41		●
Greyloft W/Sable Glaze Suede	E32		●
Greyloft W/Sable Glaze	B66		●
Hazel	C16	❖	
Hazel Suede	C17	●	
Honey Spice	HS	❖	❖
Honey Spice Suede	D88	●	●
Husk	B82	❖	
Husk Suede	C13	●	
Kaffé	KA	❖	❖
Kaffé Suede	C27	●	●
Lagoon	E63		●
Lagoon Suede	E64		●
Linen	D90		●
Linen Suede	D93		●
Linen W/Cinder Glaze Suede	E33		●
Linen W/Cocoa Glaze Suede	E34		●
Linen W/Cinder Glaze	D96		●
Linen W/Cocoa Glaze	D94		●
Midnight	B69		●
Midnight Suede	D42		●
Midnight W/Onyx Glaze Suede	E35		●
Midnight W/Onyx Glaze	B70		●
Molasses	E58	❖	❖
Molasses Suede	E59	●	●
Moonshine	D98		●
Moonshine Suede	E02		●
Moonshine W/Cinder Glaze Suede	E36		●
Moonshine W/Cocoa Glaze Suede	E37		●
Moonshine W/Cinder Glaze	E04		●
Moonshine W/Cocoa Glaze	E03		●
Mushroom	A11		●
Mushroom Suede	D43		●
Mushroom W/Cinder Glaze Suede	E38		●
Mushroom W/Cocoa Glaze Suede	E39		●
Mushroom W/Cinder Glaze	B92		●
Mushroom W/Cocoa Glaze	A12		●
Natural	NA	❖	❖
Natural Suede	D89	●	●
Onyx	A21		●
Onyx Suede	D44		●
Pebble Grey	B83		●
Pebble Grey Suede	D45		●
Pebble Grey W/Cocoa Glaze Suede	E40		●
Pebble Grey W/Cocoa Glaze	B84		●
Peppercorn	PC	❖	❖
Peppercorn Suede	D53	●	●
Praline	PR	❖	❖
Praline Suede	C78	●	●
Praline W/Onyx Glaze Suede	E16		●
Praline W/Onyx Glaze	A45		●
Saddle	B81	❖	❖
Saddle Suede	C12	●	●
Slate	B64	❖	❖
Slate Suede	C72	●	●
Sunset	SU	❖	
Sunset Suede	D49	●	
Surfside	E65		●
Surfside Suede	E66		●
Unfinished	UF	❖	❖
Vintage Biscotti	VS	●	
Vintage Biscotti Suede	E41	●	
Vintage Canvas	VC	●	
Vintage Canvas Suede	E42	●	
Vintage Chai	C35	●	
Vintage Chai Suede	E43	●	
Vintage Dove White	VD	●	
Vintage Dove White Suede	E44	●	
Vintage Greyloft	B67	●	
Vintage Greyloft Suede	E45	●	
Vintage Linen	D91	●	
Vintage Linen Suede	E46	●	
Vintage Midnight	B71	●	
Vintage Midnight Suede	E47	●	
Vintage Moonshine	D99	●	
Vintage Moonshine Suede	E48	●	
Vintage Mushroom	A13	●	
Vintage Mushroom Suede	E49	●	
Vintage Onyx	VO	●	
Vintage Onyx Suede	E50	●	
Vintage Pebble Grey	B86	●	
Vintage Pebble Grey Suede	E51	●	

Durango

Scan to view all Durango doors

Full Overlay

WLCC1	Cherry	Price Column M
WLM1	Maple	Price Column L
WLO1	Oak	Price Column J
WLA1	Rustic Alder	Price Column J
DAB1	Rustic Birch	Price Column J
AC6C1	Rustic Cherry	Price Column O
DAH1	Rustic Hickory	Price Column K
AC6M1	Rustic Maple	Price Column M

Grey color coding indicates new product, size or code.

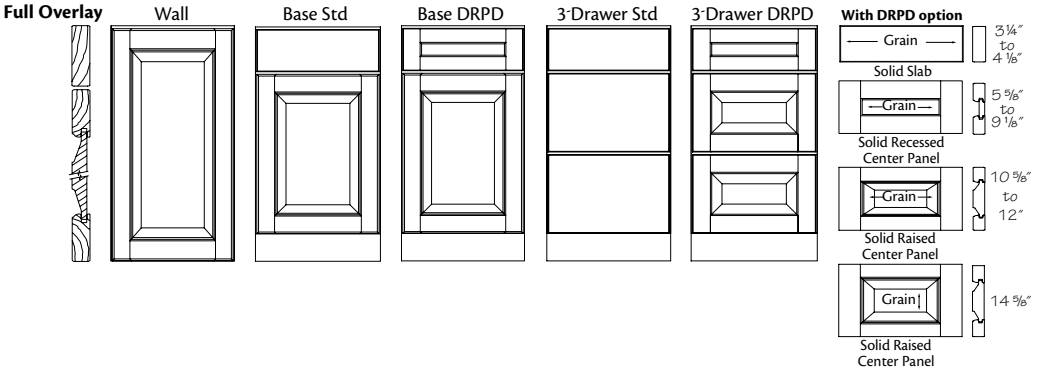

- Solid wood door frame with 2 3/4" stiles and rails
- Square solid raised panel on wall and base doors
- Slab drawer front
- Deluxe Raised Panel Drawer (DRPD) front available
- Concealed hinge
- Decorative hardware is required
- ***Note***: Rustic door styles feature knotty or character wood. It contains character marks such as heartwood, worm holes and mineral streaks of varying size. Components of these doors are chosen at random, with the appearance of each individual door varying widely from very rustic to relatively clear and unmarked

Decorative Doors & Inserts Available

Aluminum Frame Glass
- Fresco Brushed Aluminum
- Vetro Brushed Aluminum

Camed Glass
- Chateau
- Classic Camed Insert
- Palisades
- Penrose
- Victorian
- Yorkshire

Classic Glass
- Bistro
- Prepared for Glass
- Prism
- Shadow

Etched Glass
- Crossroads
- Lisbon
- Modern Frosted Insert
- Prairie
- Satina

Layered Glass
- Antiquity
- Mirage
- Silk
- Wintersday

Mullion Doors
- Ambry ▲
- Castlegate ▲
- Evansville ▲
- Hewitt ▲
- Showcase Mullion ▲
- Traditional Mullion ▲

Specialty Inserts
- Chalkboard Insert
- Leather Insert

Textured Glass
- Cascade
- Dolace
- Modern Textured Insert
- Moire
- Ravenna
- Styx
- Vauxhall

▲ Only available in Cherry, Maple & Oak door styles; **not** available in Rustic door styles

Durango Finishes

❖ *Available as Standard*
● *Premium Upcharge*

		WLCC1 Durango Cherry	WLM1 Durango Maple	WLO1 Durango Oak	WLA1 Durango Rustic Alder	DAB1 Durango Rustic Birch	AC6C1 Durango Rustic Cherry	DAH1 Durango Rustic Hickory	AC6M1 Durango Rustic Maple
Aged Concrete	E06		●						
Aged Papyrus	E05		●						
Aged River Rock	E07		●						
Autumn Blush	AB	❖		❖	❖		❖		
Autumn Blush Suede	C21	●		●	●		●		
Autumn Blush W/Onyx Glaze Suede	E10	●		●	●		●		
Autumn Blush W/Onyx Glaze	A56	●		●	●		●		
Baltic	D78	❖		❖	❖	❖	❖		
Baltic Suede	D80	●		●	●	●	●		
Biscotti	BO		●						
Biscotti Suede	D36		●						
Biscotti W/Cinder Glaze Suede	E24		●						
Biscotti W/Cocoa Glaze Suede	E25		●						
Biscotti W/Cinder Glaze	B91		●						
Biscotti W/Cocoa Glaze	IG		●						
Bonsai	E69		●						
Bonsai Suede	E70		●						
Burmese	E67		●						
Burmese Suede	E68		●						
Burnished Autumn Blush	BA	●			●		●		
Burnished Autumn Blush Suede	E17	●			●		●		
Burnished Cabernet	BT	●			●		●		
Burnished Cabernet Suede	E18	●			●		●		
Burnished Chestnut	BH		●						●
Burnished Chestnut Suede	E19		●						●
Burnished Chocolate	BL	●			●		●		
Burnished Chocolate Suede	E20	●			●		●		
Burnished Cinnamon	A51	●	●		●	●	●		●
Burnished Cinnamon Suede	E21	●	●		●	●	●		●
Burnished Ginger	BE	●	●		●	●	●		●
Burnished Ginger Suede	E22	●	●		●	●	●		●
Burnished Praline	BP		●		●	●		●	●
Burnished Praline Suede	E23		●		●	●		●	●
Cabernet	CT	❖	❖		❖	❖	❖		❖
Cabernet Suede	C80	●	●		●	●	●		●
Cabernet W/Onyx Glaze Suede	E11	●			●	●	●		
Cabernet W/Onyx Glaze	A58	●			●	●	●		
Cannon Grey	D81	❖		❖	❖	❖	❖		❖
Cannon Grey Suede	D83	●		●	●	●	●		●
Canvas	CV		●						
Canvas Suede	D37		●						
Canvas W/Cinder Glaze Suede	E26		●						
Canvas W/Cocoa Glaze Suede	E27		●						
Canvas W/Cinder Glaze	B90		●						
Canvas W/Cocoa Glaze	VG		●						
Chai	C29		●						
Chai Suede	D39		●						
Chai W/Cinder Glaze Suede	E28		●						
Chai W/Cocoa Glaze Suede	E29		●						
Chai W/Cinder Glaze	C32		●						
Chai W/Cocoa Glaze	C30		●						
Chestnut	CN		❖			❖			❖
Chestnut Suede	C23		●			●			●
Chestnut W/Onyx Glaze Suede	E12		●			●			●
Chestnut W/Onyx Glaze	A54		●			●			●
Chocolate	CC	❖	❖		❖	❖	❖		❖
Chocolate Suede	D87	●	●		●	●	●		●
Chocolate W/Ebony Glaze	EG	●			●		●		
Chocolate W/Ebony Glaze Suede	E13	●			●		●		
Cinnamon	CA	❖	❖		❖	❖	❖		❖
Cinnamon Suede	C74	●	●		●	●	●		●
Cinnamon W/Onyx Glaze Suede	E14	●	●		●	●	●		●

		WLCC1 Durango Cherry	WLM1 Durango Maple	WLO1 Durango Oak	WLA1 Durango Rustic Alder	DAB1 Durango Rustic Birch	AC6C1 Durango Rustic Cherry	DAH1 Durango Rustic Hickory	AC6M1 Durango Rustic Maple
Cinnamon W/Onyx Glaze	A48	●	●		●	●	●		●
Cognac	CO	❖	❖	❖	❖	❖	❖	❖	❖
Cognac Suede	D85	●	●	●	●	●	●	●	●
Distressed Autumn Blush	C22	●		●	●		●		
Distressed Baltic	D79	●		●	●	●	●		
Distressed Cabernet	C87	●	●		●	●	●		●
Distressed Cannon Grey	D82	●		●	●	●	●		●
Distressed Chestnut	C24		●			●			●
Distressed Chocolate	D86	●	●		●	●	●		●
Distressed Cinnamon	C75	●	●		●	●	●		●
Distressed Cognac	D84	●	●	●	●	●	●	●	●
Distressed Fawn	D52			●					
Distressed Ginger	C20	●	●	●	●	●	●	●	●
Distressed Hazel	C18	●	●	●	●	●	●	●	●
Distressed Husk	C15	●	●	●	●	●	●	●	●
Distressed Kaffé	C28	●	●	●	●	●	●	●	●
Distressed Molasses	E60	●	●	●	●	●	●	●	●
Distressed Peppercorn	C86	●	●	●	●		●		●
Distressed Praline	C79	●	●	●	●	●	●	●	●
Distressed Saddle	C14	●	●	●	●	●	●	●	●
Distressed Slate	C73	●	●	●		●	●	●	●
Distressed Sunset	D50	●			●		●	●	
Dove White	DW		●						
Dove White Suede	D40		●						
Dove White W/Cinder Glaze Suede	E30		●						
Dove White W/Cocoa Glaze Suede	E31		●						
Dove White W/Cinder Glaze	B89		●						
Dove White W/Cocoa Glaze	A15		●						
Fawn	FN			❖					
Fawn Suede	D51			●					
Ginger	C88	❖	❖	❖	❖	❖	❖	❖	❖
Ginger Suede	C19	●	●	●	●	●	●	●	●
Ginger W/Sable Glaze Suede	E15	●	●	●	●	●	●	●	●
Ginger W/Sable Glaze	C11	●	●	●	●	●	●	●	●
Greyloft	B65		●						
Greyloft Suede	D41		●						
Greyloft W/Sable Glaze Suede	E32		●						
Greyloft W/Sable Glaze	B66		●						
Hazel	C16	❖		❖	❖	❖	❖	❖	❖
Hazel Suede	C17	●		●	●	●	●	●	●
Honey Spice	HS	❖	❖	❖	❖	❖	❖	❖	❖
Honey Spice Suede	D88	●	●	●	●	●	●	●	●
Husk	B82	❖		❖	❖	❖	❖	❖	❖
Husk Suede	C13	●		●	●	●	●	●	●
Kaffé	KA	❖	❖	❖	❖	❖	❖	❖	❖
Kaffé Suede	C27	●	●	●	●	●	●	●	●
Lagoon	E63		●						
Lagoon Suede	E64		●						
Linen	D90		●						
Linen Suede	D93		●						
Linen W/Cinder Glaze Suede	E33		●						
Linen W/Cocoa Glaze Suede	E34		●						
Linen W/Cinder Glaze	D96		●						
Linen W/Cocoa Glaze	D94		●						
Midnight	B69		●						
Midnight Suede	D42		●						
Midnight W/Onyx Glaze Suede	E35		●						
Midnight W/Onyx Glaze	B70		●						
Molasses	E58	❖	❖	❖	❖	❖	❖	❖	❖
Molasses Suede	E59	●	●	●	●	●	●	●	●
Moonshine	D98		●						
Moonshine Suede	E02		●						

Continued on next page

Durango Finishes Continued

❖ *Available as Standard*
● *Premium Upcharge*

		WLCC1	WLM1	WLO1	WLA1	DAB1	AC6C1	DAH1	AC6M1
		Durango Cherry	Durango Maple	Durango Oak	Durango Rustic Alder	Durango Rustic Birch	Durango Rustic Cherry	Durango Rustic Hickory	Durango Rustic Maple
Moonshine W/Cinder Glaze Suede	E36		●						
Moonshine W/Cocoa Glaze Suede	E37		●						
Moonshine W/Cinder Glaze	E04		●						
Moonshine W/Cocoa Glaze	E03		●						
Mushroom	A11		●						
Mushroom Suede	D43		●						
Mushroom W/Cinder Glaze Suede	E38		●						
Mushroom W/Cocoa Glaze Suede	E39		●						
Mushroom W/Cinder Glaze	B92		●						
Mushroom W/Cocoa Glaze	A12		●						
Natural	NA	❖	❖	❖	❖	❖	❖	❖	❖
Natural Suede	D89	●	●	●	●	●	●	●	●
Onyx	A21		●	●					
Onyx Suede	D44		●	●					
Pebble Grey	B83		●						
Pebble Grey Suede	D45		●						
Pebble Grey W/Cocoa Glaze Suede	E40		●						
Pebble Grey W/Cocoa Glaze	B84		●						
Peppercorn	PC	❖	❖	❖	❖		❖		❖
Peppercorn Suede	D53	●	●	●	●		●		●
Praline	PR	❖	❖	❖	❖	❖	❖	❖	❖
Praline Suede	C78	●	●	●	●	●	●	●	●
Praline W/Onyx Glaze Suede	E16		●			●		●	●
Praline W/Onyx Glaze	A45		●			●		●	●
Saddle	B81	❖	❖	❖	❖	❖	❖	❖	❖
Saddle Suede	C12	●	●	●	●	●	●	●	●
Slate	B64	❖	❖	❖		❖	❖	❖	❖
Slate Suede	C72	●	●	●		●	●	●	●
Sunset	SU	❖			❖		❖	❖	
Sunset Suede	D49	●			●		●	●	
Surfside	E65		●						
Surfside Suede	E66		●						
Unfinished	UF	❖	❖	❖	❖	❖	❖	❖	❖
Vintage Biscotti	VS	●					●		
Vintage Biscotti Suede	E41	●					●		
Vintage Canvas	VC	●					●		
Vintage Canvas Suede	E42	●					●		
Vintage Chai	C35	●					●		
Vintage Chai Suede	E43	●					●		
Vintage Dove White	VD	●					●		
Vintage Dove White Suede	E44	●					●		
Vintage Greyloft	B67	●					●		
Vintage Greyloft Suede	E45	●					●		
Vintage Linen	D91	●					●		
Vintage Linen Suede	E46	●					●		
Vintage Midnight	B71	●					●		
Vintage Midnight Suede	E47	●					●		
Vintage Moonshine	D99	●					●		
Vintage Moonshine Suede	E48	●					●		
Vintage Mushroom	A13	●					●		
Vintage Mushroom Suede	E49	●					●		
Vintage Onyx	VO	●					●		
Vintage Onyx Suede	E50	●					●		
Vintage Pebble Grey	B86	●					●		
Vintage Pebble Grey Suede	E51	●					●		

Evana

Scan to view all Evana doors

Full Overlay

ECR1	Cathedral Cream Thermofoil	Price Column C
EWR1	Cathedral White Thermofoil	Price Column C
ECS1	Cream Thermofoil	Price Column C
EWS1	White Thermofoil	Price Column C

Full Overlay

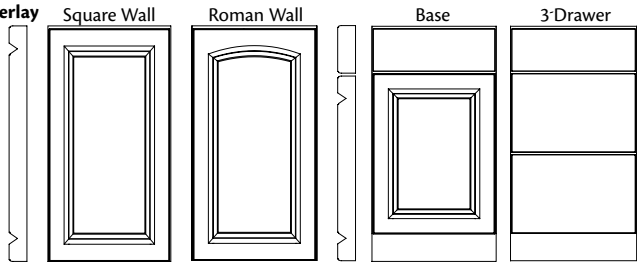

- Thermofoil on 3/4" thick MDF substrate
- Square design has raised center panel on wall and base doors
- Cathedral design has roman arch raised panels on wall doors only; base doors will be square
- Slab drawer front
- Concealed hinge
- Decorative hardware is required

Remember, all Foil and Thermofoil door styles will have a natural birch interior and a white or cream Viraguard exterior. Also, the underside of the cabinets are natural birch. To cover the underside, order an Under Cabinet Panel.

Decorative Doors & Inserts Available

Aluminum Frame Glass
- Fresco Brushed Aluminum
- Vetro Brushed Aluminum

Camed Glass
- Chateau
- Classic Camed Insert
- Palisades
- Penrose
- Victorian
- Yorkshire

Classic Glass
- Bistro
- Prepared for Glass
- Prism ★
- Shadow

Etched Glass
- Crossroads
- Lisbon
- Modern Frosted Insert ★
- Prairie
- Satina

Layered Glass
- Antiquity
- Mirage
- Silk
- Wintersday

Mullion Doors
- Traditional Mullion

Specialty Inserts
- Chalkboard Insert
- Leather Insert

Textured Glass
- Cascade
- Dolace
- Modern Textured Insert
- Moire
- Ravenna
- Styx
- Vauxhall

★ ***Not*** available in Arch door styles

Evana Finishes

❖ *Available as Standard*
● *Premium Upcharge*

		Evana Cathedral Cream ECR1	Evana Cathedral White EWR1	Evana Cream ECS1	Evana White EWS1
Cream	CS	❖		❖	
White	WH		❖		❖

Ferguson

Full Overlay

AH7C1	Cherry	Price Column H
AH7M1	Maple	Price Column G
AH7O1	Oak	Price Column F

Scan to view all Ferguson doors

Full Overlay

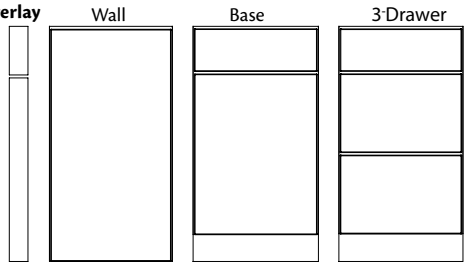

- Slab design has veneer slab on wall and base doors
- Slab drawer front
- Wood grain orientation is vertical on door and horizontal on drawer front; ***not*** book matched between pieces
- Concealed hinge
- Decorative hardware is required
- ***Note***: Doors and drawer fronts are created using veneer components from various logs of the same specie and are arranged in a deliberate mismatched manner to achieve a natural solid wood effect

Decorative Doors & Inserts Available

Aluminum Frame Glass
- Fresco Brushed Aluminum
- Vetro Brushed Aluminum

Camed Glass
- Chateau
- Classic Camed Insert
- Palisades
- Penrose
- Victorian
- Yorkshire

Classic Glass
- Bistro
- Prepared for Glass
- Prism
- Shadow

Etched Glass
- Crossroads
- Lisbon
- Modern Frosted Insert
- Prairie
- Satina

Layered Glass
- Antiquity
- Mirage
- Silk
- Wintersday

Specialty Inserts
- Chalkboard Insert
- Leather Insert

Textured Glass
- Cascade
- Dolace
- Modern Textured Insert
- Moire
- Ravenna
- Styx
- Vauxhall

Ferguson Finishes

❖ *Available as Standard*
● *Premium Upcharge*

		AH7C1	AH7M1	AH7O1
		Ferguson Cherry	Ferguson Maple	Ferguson Oak
Autumn Blush	AB	❖		❖
Autumn Blush Suede	C21	●		●
Baltic	D78	❖		❖
Baltic Suede	D80	●		●
Biscotti	BO		●	
Biscotti Suede	D36		●	
Bonsai	E69		●	
Bonsai Suede	E70		●	
Burmese	E67		●	
Burmese Suede	E68		●	
Cabernet	CT	❖	❖	
Cabernet Suede	C80	●	●	
Cannon Grey	D81	❖		❖
Cannon Grey Suede	D83	●		●
Canvas	CV		●	
Canvas Suede	D37		●	
Chai	C29		●	
Chai Suede	D39		●	
Chestnut	CN		❖	
Chestnut Suede	C23		●	
Chocolate	CC	❖	❖	
Chocolate Suede	D87	●	●	
Cinnamon	CA	❖	❖	
Cinnamon Suede	C74	●	●	
Cognac	CO	❖	❖	❖
Cognac Suede	D85	●	●	●
Dove White	DW		●	
Dove White Suede	D40		●	
Fawn	FN			❖
Fawn Suede	D51			●
Ginger	C88	❖	❖	❖
Ginger Suede	C19	●	●	●
Greyloft	B65		●	
Greyloft Suede	D41		●	
Hazel	C16	❖		❖
Hazel Suede	C17	●		●
Honey Spice	HS	❖	❖	❖
Honey Spice Suede	D88	●	●	●
Husk	B82	❖		❖
Husk Suede	C13	●		●
Kaffé	KA	❖	❖	❖
Kaffé Suede	C27	●	●	●
Lagoon	E63		●	
Lagoon Suede	E64		●	
Linen	D90		●	
Linen Suede	D93		●	
Midnight	B69		●	
Midnight Suede	D42		●	
Molasses	E58	❖	❖	❖
Molasses Suede	E59	●	●	●
Moonshine	D98		●	
Moonshine Suede	E02		●	
Mushroom	A11		●	
Mushroom Suede	D43		●	
Natural	NA	❖	❖	❖
Natural Suede	D89	●	●	●
Onyx	A21		●	●
Onyx Suede	D44		●	●
Pebble Grey	B83		●	
Pebble Grey Suede	D45		●	
Peppercorn	PC	❖	❖	❖
Peppercorn Suede	D53	●	●	●

		AH7C1	AH7M1	AH7O1
		Ferguson Cherry	Ferguson Maple	Ferguson Oak
Praline	PR	❖	❖	❖
Praline Suede	C78	●	●	●
Saddle	B81	❖	❖	❖
Saddle Suede	C12	●	●	●
Slate	B64	❖	❖	❖
Slate Suede	C72	●	●	●
Sunset	SU	❖		
Sunset Suede	D49	●		
Surfside	E65		●	
Surfside Suede	E66		●	
Unfinished	UF	❖	❖	❖

Fox Chase

Scan to view all Fox Chase doors

1/2" Overlay

AB8C1	Cherry Roman	Price Column E
AB7C1	Cherry Square	Price Column E
AB8H1	Hickory Roman	Price Column C
AB7H1	Hickory Square	Price Column C
AB8M1	Maple Roman	Price Column D
AB7M1	Maple Square	Price Column D
AB8O1	Oak Roman	Price Column C
AB7O1	Oak Square	Price Column C

Full Overlay

AC0C1	Cherry Roman	Price Column I
AB9C1	Cherry Square	Price Column I
AC0H1	Hickory Roman	Price Column E
AB9H1	Hickory Square	Price Column E
AC0M1	Maple Roman	Price Column G
AB9M1	Maple Square	Price Column G
AC0O1	Oak Roman	Price Column E
AB9O1	Oak Square	Price Column E

Grey color coding indicates new product, size or code.

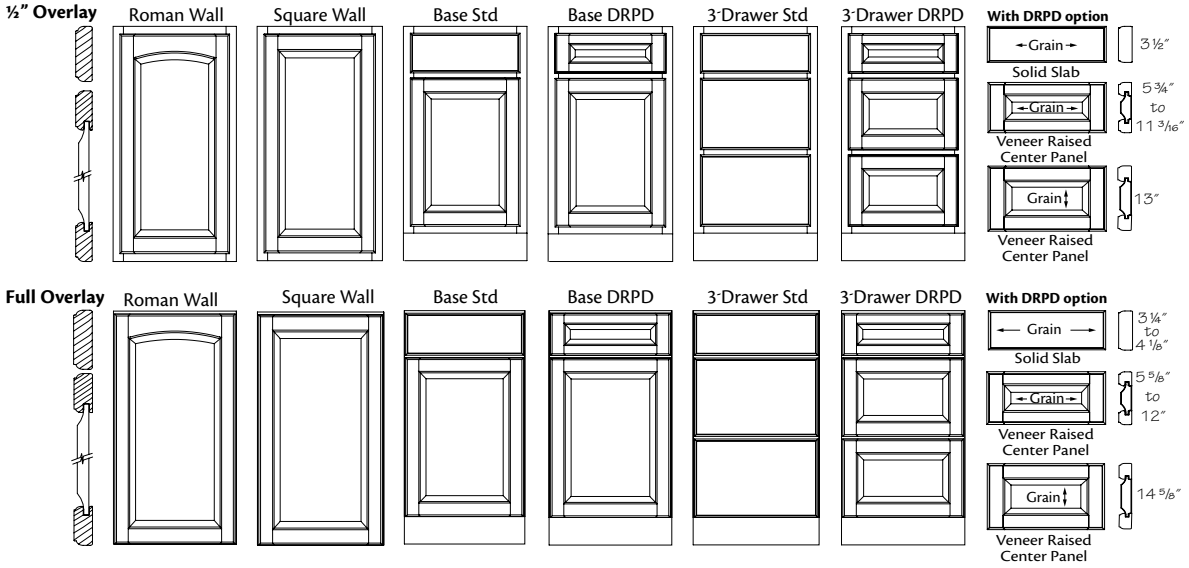

- Solid wood door frame with 2 3/16" stiles and rails
- Square design has veneer raised panel on wall and base doors
- Roman design has arched veneer raised panels on wall doors only; base doors will be square
- Slab drawer front
- Deluxe Raised Panel Drawer (DRPD) front available
- Concealed hinge
- Decorative Hardware is required for full overlay
- Finger Pull Routing (FPR) is available on 1/2" overlay

Decorative Doors & Inserts Available

Aluminum Frame Glass
- Fresco Brushed Aluminum ■
- Vetro Brushed Aluminum ■

Camed Glass
- Chateau
- Classic Camed Insert ■
- Palisades
- Penrose
- Victorian
- Yorkshire

Classic Glass
- Bistro
- Prepared for Glass
- Prism ★
- Shadow

Etched Glass
- Crossroads
- Lisbon
- Modern Frosted Insert ■ ★
- Prairie
- Satina

Layered Glass
- Antiquity
- Mirage
- Silk
- Wintersday

Mullion Doors
- Castlegate ■
- Evansville ■
- Hewitt ■
- Palladia ■ ▲
- Raleigh ■ ▲
- Showcase Mullion
- Traditional Mullion

Specialty Inserts
- Chalkboard Insert
- Leather Insert

Textured Glass
- Cascade
- Dolace
- Modern Textured Insert ■
- Moire
- Ravenna
- Styx
- Vauxhall

■ Only available in full overlay door styles
★ ***Not*** available in Arch door styles
▲ Only available in Cherry & Maple door styles

Fox Chase Finishes

❖ *Available as Standard*
● *Premium Upcharge*

		AC0C1	AB8C1	AB9C1	AB7C1	AC0H1	AB8H1	AB9H1	AB7H1	AC0M1	AB8M1	AB9M1	AB7M1	AC0O1	AB8O1	AB9O1	AB7O1
		Fox Chase Cherry Roman - Full	Fox Chase Cherry Roman - Half	Fox Chase Cherry Square - Full	Fox Chase Cherry Square - Half	Fox Chase Hickory Roman - Full	Fox Chase Hickory Roman - Half	Fox Chase Hickory Square - Full	Fox Chase Hickory Square - Half	Fox Chase Maple Roman - Full	Fox Chase Maple Roman - Half	Fox Chase Maple Square - Full	Fox Chase Maple Square - Half	Fox Chase Oak Roman - Full	Fox Chase Oak Roman - Half	Fox Chase Oak Square - Full	Fox Chase Oak Square - Half
Autumn Blush	AB	❖	❖	❖	❖									❖	❖	❖	❖
Autumn Blush Suede	C21	●	●	●	●									●	●	●	●
Autumn Blush W/Onyx Glaze Suede	E10	●	●	●	●									●	●	●	●
Autumn Blush W/Onyx Glaze	A56	●	●	●	●									●	●	●	●
Baltic	D78	❖	❖	❖	❖									❖	❖	❖	❖
Baltic Suede	D80	●	●	●	●									●	●	●	●
Biscotti	BO									●	●	●	●				
Biscotti Suede	D36									●	●	●	●				
Biscotti W/Cinder Glaze Suede	E24									●	●	●	●				
Biscotti W/Cocoa Glaze Suede	E25									●	●	●	●				
Biscotti W/Cinder Glaze	B91									●	●	●	●				
Biscotti W/Cocoa Glaze	IG									●	●	●	●				
Bonsai	E69									●	●	●	●				
Bonsai Suede	E70									●	●	●	●				
Burmese	E67									●	●	●	●				
Burmese Suede	E68									●	●	●	●				
Cabernet	CT	❖	❖	❖	❖					❖	❖	❖	❖				
Cabernet Suede	C80	●	●	●	●					●	●	●	●				
Cabernet W/Onyx Glaze Suede	E11	●	●	●	●												
Cabernet W/Onyx Glaze	A58	●	●	●	●												
Cannon Grey	D81	❖	❖	❖	❖									❖	❖	❖	❖
Cannon Grey Suede	D83	●	●	●	●									●	●	●	●
Canvas	CV									●	●	●	●				
Canvas Suede	D37									●	●	●	●				
Canvas W/Cinder Glaze Suede	E26									●	●	●	●				
Canvas W/Cocoa Glaze Suede	E27									●	●	●	●				
Canvas W/Cinder Glaze	B90									●	●	●	●				
Canvas W/Cocoa Glaze	VG									●	●	●	●				
Chai	C29									●	●	●	●				
Chai Suede	D39									●	●	●	●				
Chai W/Cinder Glaze Suede	E28									●	●	●	●				
Chai W/Cocoa Glaze Suede	E29									●	●	●	●				
Chai W/Cinder Glaze	C32									●	●	●	●				
Chai W/Cocoa Glaze	C30									●	●	●	●				
Chestnut	CN									❖	❖	❖	❖				
Chestnut Suede	C23									●	●	●	●				
Chestnut W/Onyx Glaze Suede	E12									●	●	●	●				
Chestnut W/Onyx Glaze	A54									●	●	●	●				
Chocolate	CC	❖	❖	❖	❖					❖	❖	❖	❖				
Chocolate Suede	D87	●	●	●	●					●	●	●	●				
Chocolate W/Ebony Glaze	EG	●	●	●	●												
Chocolate W/Ebony Glaze Suede	E13	●	●	●	●												
Cinnamon	CA	❖	❖	❖	❖					❖	❖	❖	❖				
Cinnamon Suede	C74	●	●	●	●					●	●	●	●				
Cinnamon W/Onyx Glaze Suede	E14	●	●	●	●					●	●	●	●				
Cinnamon W/Onyx Glaze	A48	●	●	●	●					●	●	●	●				
Cognac	CO	❖	❖	❖	❖	❖	❖	❖	❖	❖	❖	❖	❖	❖	❖	❖	❖
Cognac Suede	D85	●	●	●	●	●	●	●	●	●	●	●	●	●	●	●	●
Dove White	DW									●	●	●	●				
Dove White Suede	D40									●	●	●	●				
Dove White W/Cinder Glaze Suede	E30									●	●	●	●				
Dove White W/Cocoa Glaze Suede	E31									●	●	●	●				
Dove White W/Cinder Glaze	B89									●	●	●	●				
Dove White W/Cocoa Glaze	A15									●	●	●	●				
Fawn	FN													❖	❖	❖	❖
Fawn Suede	D51													●	●	●	●
Ginger	C88	❖	❖	❖	❖	❖	❖	❖	❖	❖	❖	❖	❖	❖	❖	❖	❖
Ginger Suede	C19	●	●	●	●	●	●	●	●	●	●	●	●	●	●	●	●
Ginger W/Sable Glaze Suede	E15	●	●	●	●	●	●	●	●	●	●	●	●	●	●	●	●
Ginger W/Sable Glaze	C11	●	●	●	●	●	●	●	●	●	●	●	●	●	●	●	●
Greyloft	B65									●	●	●	●				
Greyloft Suede	D41									●	●	●	●				
Greyloft W/Sable Glaze Suede	E32									●	●	●	●				

Continued on next page

Fox Chase Finishes Continued

❖ *Available as Standard*
● *Premium Upcharge*

		Fox Chase Cherry Roman - Full AC0C1	Fox Chase Cherry Roman - Half AB8C1	Fox Chase Cherry Square - Full AB9C1	Fox Chase Cherry Square - Half AB7C1	Fox Chase Hickory Roman - Full AC0H1	Fox Chase Hickory Roman - Half AB8H1	Fox Chase Hickory Square - Full AB9H1	Fox Chase Hickory Square - Half AB7H1	Fox Chase Maple Roman - Full AC0M1	Fox Chase Maple Roman - Half AB8M1	Fox Chase Maple Square - Full AB9M1	Fox Chase Maple Square - Half AB7M1	Fox Chase Oak Roman - Full AC0O1	Fox Chase Oak Roman - Half AB8O1	Fox Chase Oak Square - Full AB9O1	Fox Chase Oak Square - Half AB7O1
Greyloft W/Sable Glaze	B66									●	●	●	●				
Hazel	C16	❖	❖	❖	❖	❖	❖	❖	❖					❖	❖	❖	❖
Hazel Suede	C17	●	●	●	●	●	●	●	●					●	●	●	●
Honey Spice	HS	❖	❖	❖	❖	❖	❖	❖	❖	❖	❖	❖	❖	❖	❖	❖	❖
Honey Spice Suede	D88	●	●	●	●	●	●	●	●	●	●	●	●	●	●	●	●
Husk	B82	❖	❖	❖	❖	❖	❖	❖	❖					❖	❖	❖	❖
Husk Suede	C13	●	●	●	●	●	●	●	●					●	●	●	●
Kaffé	KA	❖	❖	❖	❖	❖	❖	❖	❖	❖	❖	❖	❖	❖	❖	❖	❖
Kaffé Suede	C27	●	●	●	●	●	●	●	●	●	●	●	●	●	●	●	●
Lagoon	E63									●	●	●	●				
Lagoon Suede	E64									●	●	●	●				
Linen	D90									●	●	●	●				
Linen Suede	D93									●	●	●	●				
Linen W/Cinder Glaze Suede	E33									●	●	●	●				
Linen W/Cocoa Glaze Suede	E34									●	●	●	●				
Linen W/Cinder Glaze	D96									●	●	●	●				
Linen W/Cocoa Glaze	D94									●	●	●	●				
Midnight	B69									●	●	●	●				
Midnight Suede	D42									●	●	●	●				
Midnight W/Onyx Glaze Suede	E35									●	●	●	●				
Midnight W/Onyx Glaze	B70									●	●	●	●				
Molasses	E58	❖	❖	❖	❖	❖	❖	❖	❖	❖	❖	❖	❖	❖	❖	❖	❖
Molasses Suede	E59	●	●	●	●	●	●	●	●	●	●	●	●	●	●	●	●
Moonshine	D98									●	●	●	●				
Moonshine Suede	E02									●	●	●	●				
Moonshine W/Cinder Glaze Suede	E36									●	●	●	●				
Moonshine W/Cocoa Glaze Suede	E37									●	●	●	●				
Moonshine W/Cinder Glaze	E04									●	●	●	●				
Moonshine W/Cocoa Glaze	E03									●	●	●	●				
Mushroom	A11									●	●	●	●				
Mushroom Suede	D43									●	●	●	●				
Mushroom W/Cinder Glaze Suede	E38									●	●	●	●				
Mushroom W/Cocoa Glaze Suede	E39									●	●	●	●				
Mushroom W/Cinder Glaze	B92									●	●	●	●				
Mushroom W/Cocoa Glaze	A12									●	●	●	●				
Natural	NA	❖	❖	❖	❖	❖	❖	❖	❖	❖	❖	❖	❖	❖	❖	❖	❖
Natural Suede	D89	●	●	●	●	●	●	●	●	●	●	●	●	●	●	●	●
Onyx	A21									●	●	●	●	●	●	●	●
Onyx Suede	D44									●	●	●	●	●	●	●	●
Pebble Grey	B83									●	●	●	●				
Pebble Grey Suede	D45									●	●	●	●				
Pebble Grey W/Cocoa Glaze Suede	E40									●	●	●	●				
Pebble Grey W/Cocoa Glaze	B84									●	●	●	●				
Peppercorn	PC	❖	❖	❖	❖					❖	❖	❖	❖	❖	❖	❖	❖
Peppercorn Suede	D53	●	●	●	●					●	●	●	●	●	●	●	●
Praline	PR	❖	❖	❖	❖	❖	❖	❖	❖	❖	❖	❖	❖	❖	❖	❖	❖
Praline Suede	C78	●	●	●	●	●	●	●	●	●	●	●	●	●	●	●	●
Praline W/Onyx Glaze Suede	E16					●	●	●	●	●	●	●	●				
Praline W/Onyx Glaze	A45					●	●	●	●	●	●	●	●				
Saddle	B81	❖	❖	❖	❖	❖	❖	❖	❖	❖	❖	❖	❖	❖	❖	❖	❖
Saddle Suede	C12	●	●	●	●	●	●	●	●	●	●	●	●	●	●	●	●
Slate	B64	❖	❖	❖	❖	❖	❖	❖	❖	❖	❖	❖	❖	❖	❖	❖	❖
Slate Suede	C72	●	●	●	●	●	●	●	●	●	●	●	●	●	●	●	●
Sunset	SU	❖	❖	❖	❖	❖	❖	❖	❖								
Sunset Suede	D49	●	●	●	●	●	●	●	●								
Surfside	E65									●	●	●	●				
Surfside Suede	E66									●	●	●	●				
Unfinished	UF	❖	❖	❖	❖	❖	❖	❖	❖	❖	❖	❖	❖	❖	❖	❖	❖

Garrison

Full Overlay

AB1C1 Cherry Price Column P

AB1M1 Maple Price Column O

Scan to view all Garrison doors

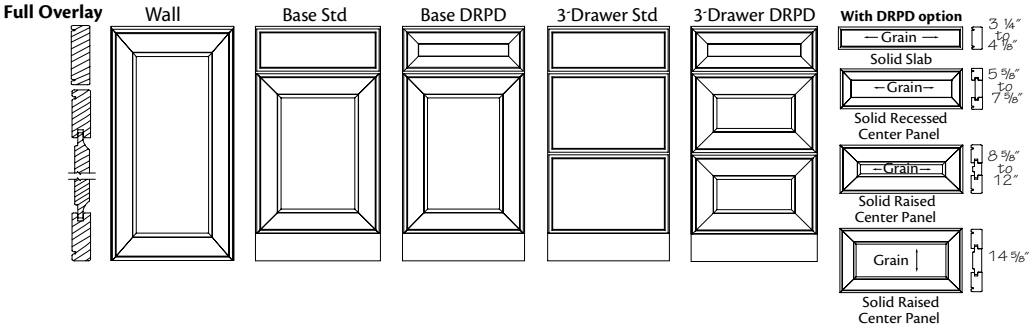

- Solid wood mitered door frame with 3" stiles and rails
- Square solid raised panel on wall and base doors
- Slab drawer front
- Deluxe Raised Panel Drawer (DRPD) front available
- Concealed hinge
- Decorative hardware is required

Decorative Doors & Inserts Available

Aluminum Frame Glass
- Fresco Brushed Aluminum
- Vetro Brushed Aluminum

Camed Glass
- Chateau
- Classic Camed Insert
- Palisades
- Penrose
- Victorian
- Yorkshire

Classic Glass
- Bistro
- Prepared for Glass
- Prism
- Shadow

Etched Glass
- Crossroads
- Lisbon
- Modern Frosted Insert
- Prairie
- Satina

Layered Glass
- Antiquity
- Mirage
- Silk
- Wintersday

Mullion Doors
- Ambry
- Castlegate
- Evansville
- Hewitt
- Showcase Mullion
- Traditional Mullion

Specialty Inserts
- Chalkboard Insert
- Leather Insert

Textured Glass
- Cascade
- Dolace
- Modern Textured Insert
- Moire
- Ravenna
- Styx
- Vauxhall

Garrison Finishes

❖ *Available as Standard*
● *Premium Upcharge*

		AB1C1 Garrison Cherry Square	AB1M1 Garrison Maple Square
Aged Concrete	E06		●
Aged Papyrus	E05		●
Aged River Rock	E07		●
Autumn Blush	AB	❖	
Autumn Blush Suede	C21	●	
Autumn Blush W/Onyx Glaze Suede	E10	●	
Autumn Blush W/Onyx Glaze	A56	●	
Baltic	D78	❖	
Baltic Suede	D80	●	
Biscotti	BO		●
Biscotti Suede	D36		●
Biscotti W/Cinder Glaze Suede	E24		●
Biscotti W/Cocoa Glaze Suede	E25		●
Biscotti W/Cinder Glaze	B91		●
Biscotti W/Cocoa Glaze	IG		●
Bonsai	E69		●
Bonsai Suede	E70		●
Burmese	E67		●
Burmese Suede	E68		●
Burnished Autumn Blush	BA	●	
Burnished Autumn Blush Suede	E17	●	
Burnished Cabernet	BT	●	
Burnished Cabernet Suede	E18	●	
Burnished Chestnut	BH		●
Burnished Chestnut Suede	E19		●
Burnished Chocolate	BL	●	
Burnished Chocolate Suede	E20	●	
Burnished Cinnamon	A51	●	●
Burnished Cinnamon Suede	E21	●	●
Burnished Ginger	BE	●	●
Burnished Ginger Suede	E22	●	●
Burnished Praline	BP		●
Burnished Praline Suede	E23		●
Cabernet	CT	❖	❖
Cabernet Suede	C80	●	●
Cabernet W/Onyx Glaze Suede	E11	●	
Cabernet W/Onyx Glaze	A58	●	
Cannon Grey	D81	❖	
Cannon Grey Suede	D83	●	
Canvas	CV		●
Canvas Suede	D37		●
Canvas W/Cinder Glaze Suede	E26		●
Canvas W/Cocoa Glaze Suede	E27		●
Canvas W/Cinder Glaze	B90		●
Canvas W/Cocoa Glaze	VG		●
Chai	C29		●
Chai Suede	D39		●
Chai W/Cinder Glaze Suede	E28		●
Chai W/Cocoa Glaze Suede	E29		●
Chai W/Cinder Glaze	C32		●
Chai W/Cocoa Glaze	C30		●
Chestnut	CN		❖
Chestnut Suede	C23		●
Chestnut W/Onyx Glaze Suede	E12		●
Chestnut W/Onyx Glaze	A54		●
Chocolate	CC	❖	❖
Chocolate Suede	D87	●	●
Chocolate W/Ebony Glaze	EG	●	
Chocolate W/Ebony Glaze Suede	E13	●	
Cinnamon	CA	❖	❖
Cinnamon Suede	C74	●	●
Cinnamon W/Onyx Glaze Suede	E14	●	●
Cinnamon W/Onyx Glaze	A48	●	●
Cognac	CO	❖	❖
Cognac Suede	D85	●	●
Distressed Autumn Blush	C22	●	
Distressed Baltic	D79	●	
Distressed Cabernet	C87	●	●
Distressed Cannon Grey	D82	●	
Distressed Chestnut	C24		●
Distressed Chocolate	D86	●	●
Distressed Cinnamon	C75	●	●
Distressed Cognac	D84	●	●
Distressed Ginger	C20	●	●
Distressed Hazel	C18	●	●
Distressed Husk	C15	●	●
Distressed Kaffé	C28	●	●
Distressed Molasses	E60	●	●
Distressed Peppercorn	C86	●	●
Distressed Praline	C79	●	●
Distressed Saddle	C14	●	●
Distressed Slate	C73	●	●
Distressed Sunset	D50	●	
Dove White	DW		●
Dove White Suede	D40		●
Dove White W/Cinder Glaze Suede	E30		●
Dove White W/Cocoa Glaze Suede	E31		●
Dove White W/Cinder Glaze	B89		●
Dove White W/Cocoa Glaze	A15		●
Ginger	C88	❖	❖
Ginger Suede	C19	●	●
Ginger W/Sable Glaze Suede	E15	●	●
Ginger W/Sable Glaze	C11	●	●
Greyloft	B65		●
Greyloft Suede	D41		●
Greyloft W/Sable Glaze Suede	E32		●
Greyloft W/Sable Glaze	B66		●
Hazel	C16	❖	
Hazel Suede	C17	●	
Honey Spice	HS	❖	❖
Honey Spice Suede	D88	●	●
Husk	B82	❖	
Husk Suede	C13	●	
Kaffé	KA	❖	❖
Kaffé Suede	C27	●	●
Lagoon	E63		●
Lagoon Suede	E64		●
Linen	D90		●
Linen Suede	D93		●
Linen W/Cinder Glaze Suede	E33		●
Linen W/Cocoa Glaze Suede	E34		●
Linen W/Cinder Glaze	D96		●
Linen W/Cocoa Glaze	D94		●
Midnight	B69		●
Midnight Suede	D42		●
Midnight W/Onyx Glaze Suede	E35		●
Midnight W/Onyx Glaze	B70		●
Molasses	E58	❖	❖
Molasses Suede	E59	●	●
Moonshine	D98		●
Moonshine Suede	E02		●
Moonshine W/Cinder Glaze Suede	E36		●
Moonshine W/Cocoa Glaze Suede	E37		●
Moonshine W/Cinder Glaze	E04		●
Moonshine W/Cocoa Glaze	E03		●
Mushroom	A11		●
Mushroom Suede	D43		●
Mushroom W/Cinder Glaze Suede	E38		●
Mushroom W/Cocoa Glaze Suede	E39		●
Mushroom W/Cinder Glaze	B92		●
Mushroom W/Cocoa Glaze	A12		●
Natural	NA	❖	❖
Natural Suede	D89	●	●
Onyx	A21		●
Onyx Suede	D44		●
Pebble Grey	B83		●
Pebble Grey Suede	D45		●
Pebble Grey W/Cocoa Glaze Suede	E40		●
Pebble Grey W/Cocoa Glaze	B84		●
Peppercorn	PC	❖	❖
Peppercorn Suede	D53	●	●
Praline	PR	❖	❖
Praline Suede	C78	●	●
Praline W/Onyx Glaze Suede	E16		●
Praline W/Onyx Glaze	A45		●
Saddle	B81	❖	❖
Saddle Suede	C12	●	●
Slate	B64	❖	❖
Slate Suede	C72	●	●
Sunset	SU	❖	
Sunset Suede	D49	●	
Surfside	E65		●
Surfside Suede	E66		●
Unfinished	UF	❖	❖
Vintage Biscotti	VS	●	
Vintage Biscotti Suede	E41	●	
Vintage Canvas	VC	●	
Vintage Canvas Suede	E42	●	
Vintage Chai	C35	●	
Vintage Chai Suede	E43	●	
Vintage Dove White	VD	●	
Vintage Dove White Suede	E44	●	
Vintage Greyloft	B67	●	
Vintage Greyloft Suede	E45	●	
Vintage Linen	D91	●	
Vintage Linen Suede	E46	●	
Vintage Midnight	B71	●	
Vintage Midnight Suede	E47	●	
Vintage Moonshine	D99	●	
Vintage Moonshine Suede	E48	●	
Vintage Mushroom	A13	●	
Vintage Mushroom Suede	E49	●	
Vintage Onyx	VO	●	
Vintage Onyx Suede	E50	●	
Vintage Pebble Grey	B86	●	
Vintage Pebble Grey Suede	E51	●	

Glennberry

Full Overlay

GRC1	Cherry	Price Column P
GRM1	Maple	Price Column O

Scan to view all Glennberry doors

Full Overlay

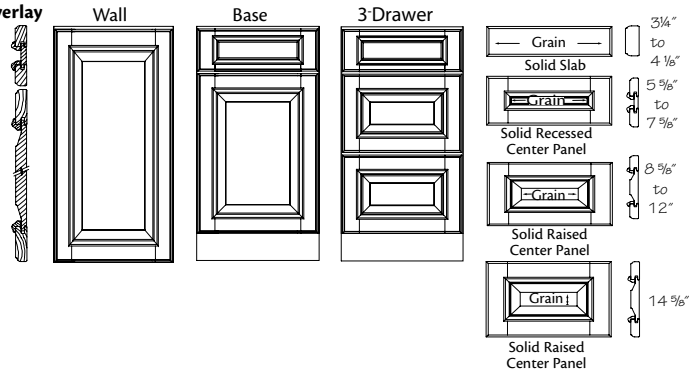

- Solid wood door frame with 2 1/2" stiles and rails
- Square solid raised panel on wall and base doors
- Applied decorative molding
- Drawer front varies depending on height
- Concealed hinge
- Decorative hardware is required

Decorative Doors & Inserts Available

Aluminum Frame Glass
- Fresco Brushed Aluminum
- Vetro Brushed Aluminum

Camed Glass
- Chateau
- Classic Camed Insert
- Palisades
- Penrose
- Victorian
- Yorkshire

Classic Glass
- Bistro
- Prepared for Glass
- Shadow

Etched Glass
- Crossroads
- Lisbon
- Prairie
- Satina

Layered Glass
- Antiquity
- Mirage
- Silk
- Wintersday

Mullion Doors
- Castlegate
- Evansville
- Hewitt
- Showcase Mullion
- Traditional Mullion

Specialty Inserts
- Chalkboard Insert
- Leather Insert

Textured Glass
- Cascade
- Dolace
- Modern Textured Insert
- Moire
- Ravenna
- Styx
- Vauxhall

Glennberry Finishes

❖ *Available as Standard*
● *Premium Upcharge*

		GRC1 Glennberry Cherry	GRM1 Glennberry Maple
Aged Concrete	E06		●
Aged Papyrus	E05		●
Aged River Rock	E07		●
Autumn Blush	AB	❖	
Autumn Blush Suede	C21	●	
Autumn Blush W/Onyx Glaze Suede	E10	●	
Autumn Blush W/Onyx Glaze	A56	●	
Baltic	D78	❖	
Baltic Suede	D80	●	
Biscotti	BO		●
Biscotti Suede	D36		●
Biscotti W/Cinder Glaze Suede	E24		●
Biscotti W/Cocoa Glaze Suede	E25		●
Biscotti W/Cinder Glaze	B91		●
Biscotti W/Cocoa Glaze	IG		●
Bonsai	E69		●
Bonsai Suede	E70		●
Burmese	E67		●
Burmese Suede	E68		●
Burnished Autumn Blush	BA	●	
Burnished Autumn Blush Suede	E17	●	
Burnished Cabernet	BT	●	
Burnished Cabernet Suede	E18	●	
Burnished Chestnut	BH		●
Burnished Chestnut Suede	E19		●
Burnished Chocolate	BL	●	
Burnished Chocolate Suede	E20	●	
Burnished Cinnamon	A51	●	●
Burnished Cinnamon Suede	E21	●	●
Burnished Ginger	BE	●	●
Burnished Ginger Suede	E22	●	●
Burnished Praline	BP		●
Burnished Praline Suede	E23		●
Cabernet	CT	❖	❖
Cabernet Suede	C80	●	●
Cabernet W/Onyx Glaze Suede	E11	●	
Cabernet W/Onyx Glaze	A58	●	
Cannon Grey	D81	❖	
Cannon Grey Suede	D83	●	
Canvas	CV		●
Canvas Suede	D37		●
Canvas W/Cinder Glaze Suede	E26		●
Canvas W/Cocoa Glaze Suede	E27		●
Canvas W/Cinder Glaze	B90		●
Canvas W/Cocoa Glaze	VG		●
Chai	C29		●
Chai Suede	D39		●
Chai W/Cinder Glaze Suede	E28		●
Chai W/Cocoa Glaze Suede	E29		●
Chai W/Cinder Glaze	C32		●
Chai W/Cocoa Glaze	C30		●
Chestnut	CN		❖
Chestnut Suede	C23		●
Chestnut W/Onyx Glaze Suede	E12		●
Chestnut W/Onyx Glaze	A54		●
Chocolate	CC	❖	❖
Chocolate Suede	D87	●	●
Chocolate W/Ebony Glaze	EG	●	
Chocolate W/Ebony Glaze Suede	E13	●	
Cinnamon	CA	❖	❖
Cinnamon Suede	C74	●	●
Cinnamon W/Onyx Glaze Suede	E14	●	●
Cinnamon W/Onyx Glaze	A48	●	●
Cognac	CO	❖	❖
Cognac Suede	D85	●	●
Distressed Autumn Blush	C22	●	
Distressed Baltic	D79	●	
Distressed Cabernet	C87	●	●
Distressed Cannon Grey	D82	●	
Distressed Chestnut	C24		●
Distressed Chocolate	D86	●	●
Distressed Cinnamon	C75	●	●
Distressed Cognac	D84	●	●
Distressed Ginger	C20	●	●
Distressed Hazel	C18	●	●
Distressed Husk	C15	●	●
Distressed Kaffé	C28	●	●
Distressed Molasses	E60	●	●
Distressed Peppercorn	C86	●	●
Distressed Praline	C79	●	●
Distressed Saddle	C14	●	●
Distressed Slate	C73	●	●
Distressed Sunset	D50	●	
Dove White	DW		●
Dove White Suede	D40		●
Dove White W/Cinder Glaze Suede	E30		●
Dove White W/Cocoa Glaze Suede	E31		●
Dove White W/Cinder Glaze	B89		●
Dove White W/Cocoa Glaze	A15		●
Ginger	C88	❖	❖
Ginger Suede	C19	●	●
Ginger W/Sable Glaze Suede	E15	●	●
Ginger W/Sable Glaze	C11	●	●
Greyloft	B65		●
Greyloft Suede	D41		●
Greyloft W/Sable Glaze Suede	E32		●
Greyloft W/Sable Glaze	B66		●
Hazel	C16	❖	
Hazel Suede	C17	●	
Honey Spice	HS	❖	❖
Honey Spice Suede	D88	●	●
Husk	B82	❖	
Husk Suede	C13	●	
Kaffé	KA	❖	❖
Kaffé Suede	C27	●	●
Lagoon	E63		●
Lagoon Suede	E64		●
Linen	D90		●
Linen Suede	D93		●
Linen W/Cinder Glaze Suede	E33		●
Linen W/Cocoa Glaze Suede	E34		●
Linen W/Cinder Glaze	D96		●
Linen W/Cocoa Glaze	D94		●
Midnight	B69		●
Midnight Suede	D42		●
Midnight W/Onyx Glaze Suede	E35		●
Midnight W/Onyx Glaze	B70		●
Molasses	E58	❖	❖
Molasses Suede	E59	●	●
Moonshine	D98		●
Moonshine Suede	E02		●
Moonshine W/Cinder Glaze Suede	E36		●
Moonshine W/Cocoa Glaze Suede	E37		●
Moonshine W/Cinder Glaze	E04		●
Moonshine W/Cocoa Glaze	E03		●
Mushroom	A11		●
Mushroom Suede	D43		●
Mushroom W/Cinder Glaze Suede	E38		●
Mushroom W/Cocoa Glaze Suede	E39		●
Mushroom W/Cinder Glaze	B92		●
Mushroom W/Cocoa Glaze	A12		●
Natural	NA	❖	❖
Natural Suede	D89	●	●
Onyx	A21		●
Onyx Suede	D44		●
Pebble Grey	B83		●
Pebble Grey Suede	D45		●
Pebble Grey W/Cocoa Glaze Suede	E40		●
Pebble Grey W/Cocoa Glaze	B84		●
Peppercorn	PC	❖	❖
Peppercorn Suede	D53	●	●
Praline	PR	❖	❖
Praline Suede	C78	●	●
Praline W/Onyx Glaze Suede	E16		●
Praline W/Onyx Glaze	A45		●
Saddle	B81	❖	❖
Saddle Suede	C12	●	●
Slate	B64	❖	❖
Slate Suede	C72	●	●
Sunset	SU	❖	
Sunset Suede	D49	●	
Surfside	E65		●
Surfside Suede	E66		●
Unfinished	UF	❖	❖
Vintage Biscotti	VS	●	
Vintage Biscotti Suede	E41	●	
Vintage Canvas	VC	●	
Vintage Canvas Suede	E42	●	
Vintage Chai	C35	●	
Vintage Chai Suede	E43	●	
Vintage Dove White	VD	●	
Vintage Dove White Suede	E44	●	
Vintage Greyloft	B67	●	
Vintage Greyloft Suede	E45	●	
Vintage Linen	D91	●	
Vintage Linen Suede	E46	●	
Vintage Midnight	B71	●	
Vintage Midnight Suede	E47	●	
Vintage Moonshine	D99	●	
Vintage Moonshine Suede	E48	●	
Vintage Mushroom	A13	●	
Vintage Mushroom Suede	E49	●	
Vintage Onyx	VO	●	
Vintage Onyx Suede	E50	●	
Vintage Pebble Grey	B86	●	
Vintage Pebble Grey Suede	E51	●	

Grandview

Scan to view all Grandview doors

1/2" Overlay

2GCR1	Cherry Roman	Price Column D
2GCS1	Cherry Square	Price Column D
AC3D1	EverCore™ Roman	Price Column A
AC2D1	EverCore™ Square	Price Column A
AC3H1	Hickory Roman	Price Column A
AC2H1	Hickory Square	Price Column A
AC3M1	Maple Roman	Price Column B
AC2M1	Maple Square	Price Column B
AC3O1	Oak Roman	Price Column A
AC2O1	Oak Square	Price Column A
AC2A1	Rustic Alder Square	Price Column B

Full Overlay

AD0C1	Cherry Roman	Price Column G
AC9C1	Cherry Square	Price Column G
AD0D1	EverCore™ Roman	Price Column D
AC9D1	EverCore™ Square	Price Column D
AD0H1	Hickory Roman	Price Column E
AC9H1	Hickory Square	Price Column E
AD0M1	Maple Roman	Price Column F
AC9M1	Maple Square	Price Column F
AD0O1	Oak Roman	Price Column E
AC9O1	Oak Square	Price Column E
AC9A1	Rustic Alder Square	Price Column F

Grey color coding indicates new product, size or code.

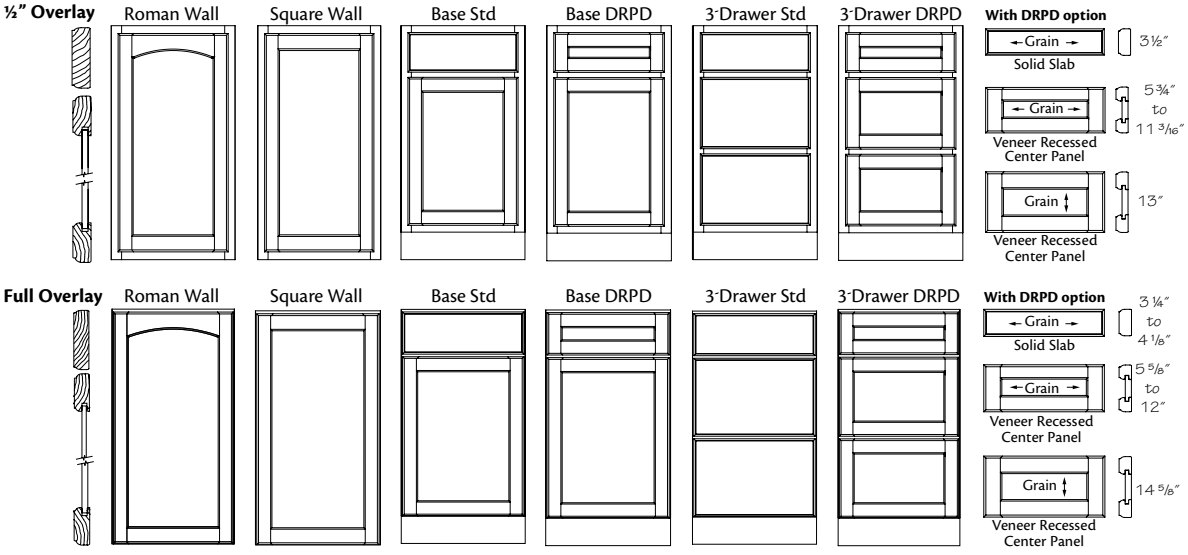

- Solid wood door frame with 2 3/16" stiles and rails, except EverCore™, which will be mechanically compressed wood fiber
- Square design has veneer recessed panel on wall and base doors, except EverCore™, which will be mechanically compressed wood fiber
- Roman design has arched veneer recessed panels on wall doors only, except EverCore™, which will be mechanically compressed wood fiber; base doors will be square
- Slab drawer front
- Deluxe Recessed Panel Drawer (DRPD) front available
- Concealed hinge
- Decorative Hardware is required for full overlay
- Finger Pull Routing (FPR) is available on 1/2" overlay
- Rustic Alder is available in square only
- Knife Hinge (KH) is available on Cherry Roman or Square in 1/2" overlay
- ***Note***: Rustic door styles feature knotty or character wood. It contains character marks such as heartwood, worm holes and mineral streaks of varying size. Components of these doors are chosen at random, with the appearance of each individual door varying widely from very rustic to relatively clear and unmarked

Decorative Doors & Inserts Available

Aluminum Frame Glass
- Fresco Brushed Aluminum ■
- Vetro Brushed Aluminum ■

Camed Glass
- Chateau
- Classic Camed Insert ■
- Palisades
- Penrose
- Victorian
- Yorkshire

Classic Glass
- Bistro
- Prepared for Glass
- Prism ●
- Shadow

Etched Glass
- Crossroads
- Lisbon
- Modern Frosted Insert ■ ●
- Prairie
- Satina

Layered Glass
- Antiquity
- Mirage
- Silk
- Wintersday

Mullion Doors
- Castlegate ★ ■☆
- Evansville ★ ■☆
- Hewitt ★ ■☆
- Palladia ▲ ■☆
- Raleigh ▲ ■
- Showcase Mullion ★☆
- Traditional Mullion ★☆

Specialty Inserts
- Chalkboard Insert
- Leather Insert

Textured Glass
- Cascade
- Dolace
- Modern Textured Insert ■
- Moire
- Ravenna
- Styx
- Vauxhall

▲ Only available in Cherry & Maple door styles
★ ***Not*** available in Rustic door styles
■ Only available in full overlay door styles
● ***Not*** available in Arch door styles
☆ ***Not*** available in Evercore™ door styles

Grandview Finishes

❖ *Available as Standard*
● *Premium Upcharge*

		AD0C1	2GCR1	AC9C1	2GCS1	AD0D1	AC3D1	AC9D1	AC2D1	AD0H1	AC3H1	AC9H1	AC2H1	AD0M1	AC3M1	AC9M1	AC2M1	AD0O1	AC3O1	AC9O1	AC2O1	AC9A1	AC2A1
		Grandview Cherry Roman - Full	Grandview Cherry Roman - Half	Grandview Cherry Square - Full	Grandview Cherry Square - Half	Grandview EverCore Roman - Full	Grandview EverCore Roman - Half	Grandview EverCore Square - Full	Grandview EverCore Square - Half	Grandview Hickory Roman - Full	Grandview Hickory Roman - Half	Grandview Hickory Square - Full	Grandview Hickory Square - Half	Grandview Maple Roman - Full	Grandview Maple Roman - Half	Grandview Maple Square - Full	Grandview Maple Square - Half	Grandview Oak Roman - Full	Grandview Oak Roman - Half	Grandview Oak Square - Full	Grandview Oak Square - Half	Grandview Rustic Alder Square - Full	Grandview Rustic Alder Square - Half
Autumn Blush	AB	❖	❖	❖	❖													❖	❖	❖	❖	❖	❖
Autumn Blush Suede	C21	●	●	●	●													●	●	●	●	●	●
Autumn Blush W/Onyx Glaze Suede	E10	●	●	●	●													●	●	●	●	●	●
Autumn Blush W/Onyx Glaze	A56	●	●	●	●													●	●	●	●	●	●
Baltic	D78	❖	❖	❖	❖													❖	❖	❖	❖	❖	❖
Baltic Suede	D80	●	●	●	●													●	●	●	●	●	●
Biscotti	BO					●	●	●	●					●	●	●	●						
Biscotti Suede	D36					●	●	●	●					●	●	●	●						
Biscotti W/Cinder Glaze Suede	E24													●	●	●	●						
Biscotti W/Cocoa Glaze Suede	E25													●	●	●	●						
Biscotti W/Cinder Glaze	B91													●	●	●	●						
Biscotti W/Cocoa Glaze	IG													●	●	●	●						
Bonsai	E69					●	●	●	●					●	●	●	●						
Bonsai Suede	E70					●	●	●	●					●	●	●	●						
Burmese	E67					●	●	●	●					●	●	●	●						
Burmese Suede	E68					●	●	●	●					●	●	●	●						
Cabernet	CT	❖	❖	❖	❖									❖	❖	❖	❖					❖	❖
Cabernet Suede	C80	●	●	●	●									●	●	●	●					●	●
Cabernet W/Onyx Glaze Suede	E11	●	●	●	●																	●	●
Cabernet W/Onyx Glaze	A58	●	●	●	●																	●	●
Cannon Grey	D81	❖	❖	❖	❖													❖	❖	❖	❖	❖	❖
Cannon Grey Suede	D83	●	●	●	●													●	●	●	●	●	●
Canvas	CV					●	●	●	●					●	●	●	●						
Canvas Suede	D37					●	●	●	●					●	●	●	●						
Canvas W/Cinder Glaze Suede	E26													●	●	●	●						
Canvas W/Cocoa Glaze Suede	E27													●	●	●	●						
Canvas W/Cinder Glaze	B90													●	●	●	●						
Canvas W/Cocoa Glaze	VG													●	●	●	●						
Chai	C29					●	●	●	●					●	●	●	●						
Chai Suede	D39					●	●	●	●					●	●	●	●						
Chai W/Cinder Glaze Suede	E28													●	●	●	●						
Chai W/Cocoa Glaze Suede	E29													●	●	●	●						
Chai W/Cinder Glaze	C32													●	●	●	●						
Chai W/Cocoa Glaze	C30													●	●	●	●						
Chestnut	CN													❖	❖	❖	❖						
Chestnut Suede	C23													●	●	●	●						
Chestnut W/Onyx Glaze Suede	E12													●	●	●	●						
Chestnut W/Onyx Glaze	A54													●	●	●	●						
Chocolate	CC	❖	❖	❖	❖									❖	❖	❖	❖					❖	❖
Chocolate Suede	D87	●	●	●	●									●	●	●	●					●	●
Chocolate W/Ebony Glaze	EG	●	●	●	●																	●	●
Chocolate W/Ebony Glaze Suede	E13	●	●	●	●																	●	●
Cinnamon	CA	❖	❖	❖	❖									❖	❖	❖	❖					❖	❖
Cinnamon Suede	C74	●	●	●	●									●	●	●	●					●	●
Cinnamon W/Onyx Glaze Suede	E14	●	●	●	●									●	●	●	●					●	●
Cinnamon W/Onyx Glaze	A48	●	●	●	●									●	●	●	●					●	●
Cognac	CO	❖	❖	❖	❖					❖	❖	❖	❖	❖	❖	❖	❖	❖	❖	❖	❖	❖	❖
Cognac Suede	D85	●	●	●	●					●	●	●	●	●	●	●	●	●	●	●	●	●	●
Dove White	DW					●	●	●	●					●	●	●	●						
Dove White Suede	D40					●	●	●	●					●	●	●	●						
Dove White W/Cinder Glaze Suede	E30													●	●	●	●						
Dove White W/Cocoa Glaze Suede	E31													●	●	●	●						
Dove White W/Cinder Glaze	B89													●	●	●	●						
Dove White W/Cocoa Glaze	A15													●	●	●	●						
Fawn	FN																	❖	❖	❖	❖		
Fawn Suede	D51																	●	●	●	●		
Ginger	C88	❖	❖	❖	❖					❖	❖	❖	❖	❖	❖	❖	❖	❖	❖	❖	❖	❖	❖
Ginger Suede	C19	●	●	●	●					●	●	●	●	●	●	●	●	●	●	●	●	●	●
Ginger W/Sable Glaze Suede	E15	●	●	●	●					●	●	●	●	●	●	●	●	●	●	●	●	●	●
Ginger W/Sable Glaze	C11	●	●	●	●					●	●	●	●	●	●	●	●	●	●	●	●	●	●
Greyloft	B65					●	●	●	●					●	●	●	●						

Continued on next page

Grandview Finishes continued

❖ *Available as Standard*
● *Premium Upcharge*

		AD0C1	2GCR1	AC9C1	2GCS1	AD0D1	AC3D1	AC9D1	AC2D1	AD0H1	AC3H1	AC9H1	AC2H1	AD0M1	AC3M1	AC9M1	AC2M1	AD0O1	AC3O1	AC9O1	AC2O1	AC9A1	AC2A1
		Grandview Cherry Roman - Full	Grandview Cherry Roman - Half	Grandview Cherry Square - Full	Grandview Cherry Square - Half	Grandview EverCore Roman - Full	Grandview EverCore Roman - Half	Grandview EverCore Square - Full	Grandview EverCore Square - Half	Grandview Hickory Roman - Full	Grandview Hickory Roman - Half	Grandview Hickory Square - Full	Grandview Hickory Square - Half	Grandview Maple Roman - Full	Grandview Maple Roman - Half	Grandview Maple Square - Full	Grandview Maple Square - Half	Grandview Oak Roman - Full	Grandview Oak Roman - Half	Grandview Oak Square - Full	Grandview Oak Square - Half	Grandview Rustic Alder Square - Full	Grandview Rustic Alder Square - Half
Greyloft Suede	D41					●	●	●	●					●	●	●	●						
Greyloft W/Sable Glaze Suede	E32													●	●	●	●						
Greyloft W/Sable Glaze	B66													●	●	●	●						
Hazel	C16	❖	❖	❖	❖					❖	❖	❖	❖					❖	❖	❖	❖	❖	❖
Hazel Suede	C17	●	●	●	●					●	●	●	●					●	●	●	●	●	●
Honey Spice	HS	❖	❖	❖	❖					❖	❖	❖	❖	❖	❖	❖	❖	❖	❖	❖	❖	❖	❖
Honey Spice Suede	D88	●	●	●	●					●	●	●	●	●	●	●	●	●	●	●	●	●	●
Husk	B82	❖	❖	❖	❖					❖	❖	❖	❖					❖	❖	❖	❖	❖	❖
Husk Suede	C13	●	●	●	●					●	●	●	●					●	●	●	●	●	●
Kaffé	KA	❖	❖	❖	❖					❖	❖	❖	❖	❖	❖	❖	❖	❖	❖	❖	❖	❖	❖
Kaffé Suede	C27	●	●	●	●					●	●	●	●	●	●	●	●	●	●	●	●	●	●
Lagoon	E63					●	●	●	●					●	●	●	●						
Lagoon Suede	E64					●	●	●	●					●	●	●	●						
Linen	D90					●	●	●	●					●	●	●	●						
Linen Suede	D93					●	●	●	●					●	●	●	●						
Linen W/Cinder Glaze Suede	E33													●	●	●	●						
Linen W/Cocoa Glaze Suede	E34													●	●	●	●						
Linen W/Cinder Glaze	D96													●	●	●	●						
Linen W/Cocoa Glaze	D94													●	●	●	●						
Midnight	B69					●	●	●	●					●	●	●	●						
Midnight Suede	D42					●	●	●	●					●	●	●	●						
Midnight W/Onyx Glaze Suede	E35													●	●	●	●						
Midnight W/Onyx Glaze	B70													●	●	●	●						
Molasses	E58	❖	❖	❖	❖					❖	❖	❖	❖	❖	❖	❖	❖	❖	❖	❖	❖	❖	❖
Molasses Suede	E59	●	●	●	●					●	●	●	●	●	●	●	●	●	●	●	●	●	●
Moonshine	D98					●	●	●	●					●	●	●	●						
Moonshine Suede	E02					●	●	●	●					●	●	●	●						
Moonshine W/Cinder Glaze Suede	E36													●	●	●	●						
Moonshine W/Cocoa Glaze Suede	E37													●	●	●	●						
Moonshine W/Cinder Glaze	E04													●	●	●	●						
Moonshine W/Cocoa Glaze	E03													●	●	●	●						
Mushroom	A11					●	●	●	●					●	●	●	●						
Mushroom Suede	D43					●	●	●	●					●	●	●	●						
Mushroom W/Cinder Glaze Suede	E38													●	●	●	●						
Mushroom W/Cocoa Glaze Suede	E39													●	●	●	●						
Mushroom W/Cinder Glaze	B92													●	●	●	●						
Mushroom W/Cocoa Glaze	A12													●	●	●	●						
Natural	NA	❖	❖	❖	❖					❖	❖	❖	❖	❖	❖	❖	❖	❖	❖	❖	❖	❖	❖
Natural Suede	D89	●	●	●	●					●	●	●	●	●	●	●	●	●	●	●	●	●	●
Onyx	A21					●	●	●	●					●	●	●	●	●	●	●	●		
Onyx Suede	D44					●	●	●	●					●	●	●	●	●	●	●	●		
Pebble Grey	B83					●	●	●	●					●	●	●	●						
Pebble Grey Suede	D45					●	●	●	●					●	●	●	●						
Pebble Grey W/Cocoa Glaze Suede	E40													●	●	●	●						
Pebble Grey W/Cocoa Glaze	B84													●	●	●	●						
Peppercorn	PC	❖	❖	❖	❖									❖	❖	❖	❖	❖	❖	❖	❖	❖	❖
Peppercorn Suede	D53	●	●	●	●									●	●	●	●	●	●	●	●	●	●
Praline	PR	❖	❖	❖	❖					❖	❖	❖	❖	❖	❖	❖	❖	❖	❖	❖	❖	❖	❖
Praline Suede	C78	●	●	●	●					●	●	●	●	●	●	●	●	●	●	●	●	●	●
Praline W/Onyx Glaze Suede	E16									●	●	●	●	●	●	●	●						
Praline W/Onyx Glaze	A45									●	●	●	●	●	●	●	●						
Saddle	B81	❖	❖	❖	❖					❖	❖	❖	❖	❖	❖	❖	❖	❖	❖	❖	❖	❖	❖
Saddle Suede	C12	●	●	●	●					●	●	●	●	●	●	●	●	●	●	●	●	●	●
Slate	B64	❖	❖	❖	❖					❖	❖	❖	❖	❖	❖	❖	❖	❖	❖	❖	❖		
Slate Suede	C72	●	●	●	●					●	●	●	●	●	●	●	●	●	●	●	●		
Sunset	SU	❖	❖	❖	❖					❖	❖	❖	❖									❖	❖
Sunset Suede	D49	●	●	●	●					●	●	●	●									●	●
Surfside	E65					●	●	●	●					●	●	●	●						
Surfside Suede	E66					●	●	●	●					●	●	●	●						
Unfinished	UF	❖	❖	❖	❖					❖	❖	❖	❖	❖	❖	❖	❖	❖	❖	❖	❖	❖	❖

Notes

Halden

Scan to view all Halden doors

Full Overlay

AH4L1 Cannon Grey Wood-Grain Foil — Price Column G

AH4W1 Dove White Wood-Grain Foil — Price Column G

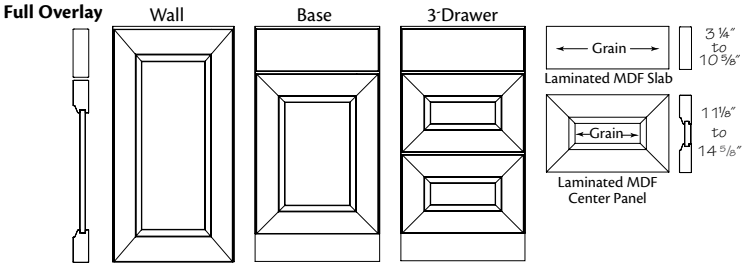

- Thermofoil on 3/4" thick MDF substrate
- Mitered door with 4 1/8" stiles and rails
- Recessed center panel door with horizontal grain orientation
- Five-piece mitered construction with foil wrapped lineal pieces
- Doors on 6" wide cabinets will be a slab design with vertical grain orientation
- Both doors on EZR33 and Asymmetrical EZR cabinets will be a slab design with vertical grain orientation
- Drawer fronts 3 1/4" to 10 5/8" will be slab
- Drawer fronts 11 1/8" to 14 5/8" will be five-piece
- Concealed hinge
- Decorative hardware is required
- ***Note***: Cabinet box and most accessories will have a coordinating smooth white finish for Dove White Wood-Grain Foil or an oak texture finish for Cannon Grey Wood-Grain Foil door styles; select accessories will be offered in matching foil material (refer to individual items for specific details)

Decorative Doors & Inserts Available

Aluminum Frame Glass
- Fresco Brushed Aluminum
- Vetro Brushed Aluminum

Camed Glass
- Chateau
- Classic Camed Insert
- Palisades
- Penrose
- Victorian
- Yorkshire

Classic Glass
- Bistro
- Prepared for Glass
- Prism
- Shadow

Etched Glass
- Crossroads
- Lisbon
- Modern Frosted Insert
- Prairie
- Satina

Layered Glass
- Antiquity
- Mirage
- Silk
- Wintersday

Specialty Inserts
- Chalkboard Insert
- Leather Insert

Textured Glass
- Cascade
- Dolace
- Modern Textured Insert
- Moire
- Ravenna
- Styx
- Vauxhall

Halden Finishes

❖ *Available as Standard*
● *Premium Upcharge*

		Halden Cannon Grey AH4L1	Halden Dove White AH4W1
Cannon Grey Wood Grain	D81O	❖	
Dove White Wood Grain	WH		❖

Hanley

Scan to view all Hanley doors

1/2" Overlay

2NGC1	Maple Roman	Price Column B
2NG1	Maple Square	Price Column B
2SWC1	Oak Roman	Price Column A
2SW1	Oak Square	Price Column A

½" Overlay Roman Wall Square Wall Base 3-Drawer

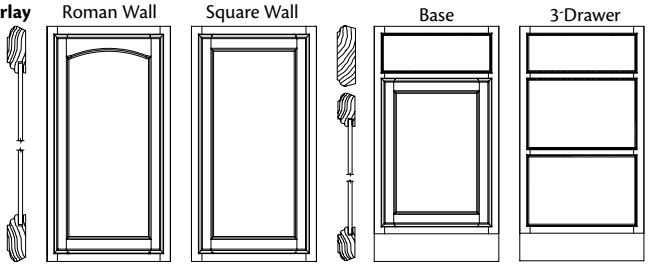

- Solid wood door frame with 2 3/16" stiles and rails
- Square design has veneer recessed panel on wall and base doors
- Roman design has arched veneer recessed panels on wall doors only; base doors will be square
- Reverse bevel lip
- Slab drawer front
- Concealed or optional knife hinge
- Decorative hardware is optional

Decorative Doors & Inserts Available

Camed Glass
- Chateau
- Palisades
- Penrose
- Victorian
- Yorkshire

Classic Glass
- Bistro
- Prepared for Glass
- Prism ★
- Shadow

Etched Glass
- Crossroads
- Lisbon
- Prairie
- Satina

Layered Glass
- Antiquity
- Mirage
- Silk
- Wintersday

Mullion Doors
- Showcase Mullion
- Traditional Mullion

Specialty Inserts
- Chalkboard Insert
- Leather Insert

Textured Glass
- Cascade
- Dolace
- Moire
- Ravenna
- Styx
- Vauxhall

★ ***Not*** available in Arch door styles

Hanley Finishes

❖ *Available as Standard*
● *Premium Upcharge*

		2NGC1 Hanley Maple Roman	2NG1 Hanley Maple Square	2SWC1 Hanley Oak Roman	2SW1 Hanley Oak Square
Autumn Blush	AB			❖	❖
Autumn Blush Suede	C21			●	●
Autumn Blush W/Onyx Glaze Suede	E10			●	●
Autumn Blush W/Onyx Glaze	A56			●	●
Baltic	D78			❖	❖
Baltic Suede	D80			●	●
Biscotti	BO	●	●		
Biscotti Suede	D36	●	●		
Biscotti W/Cinder Glaze Suede	E24	●	●		
Biscotti W/Cocoa Glaze Suede	E25	●	●		
Biscotti W/Cinder Glaze	B91	●	●		
Biscotti W/Cocoa Glaze	IG	●	●		
Bonsai	E69	●	●		
Bonsai Suede	E70	●	●		
Burmese	E67	●	●		
Burmese Suede	E68	●	●		
Cabernet	CT	❖	❖		
Cabernet Suede	C80	●	●		
Cannon Grey	D81			❖	❖
Cannon Grey Suede	D83			●	●
Canvas	CV	●	●		
Canvas Suede	D37	●	●		
Canvas W/Cinder Glaze Suede	E26	●	●		
Canvas W/Cocoa Glaze Suede	E27	●	●		
Canvas W/Cinder Glaze	B90	●	●		
Canvas W/Cocoa Glaze	VG	●	●		
Chai	C29	●	●		
Chai Suede	D39	●	●		
Chai W/Cinder Glaze Suede	E28	●	●		
Chai W/Cocoa Glaze Suede	E29	●	●		
Chai W/Cinder Glaze	C32	●	●		
Chai W/Cocoa Glaze	C30	●	●		
Chestnut	CN	❖	❖		
Chestnut Suede	C23	●	●		
Chestnut W/Onyx Glaze Suede	E12	●	●		
Chestnut W/Onyx Glaze	A54	●	●		
Chocolate	CC	❖	❖		
Chocolate Suede	D87	●	●		
Cinnamon	CA	❖	❖		
Cinnamon Suede	C74	●	●		
Cinnamon W/Onyx Glaze Suede	E14	●	●		
Cinnamon W/Onyx Glaze	A48	●	●		
Cognac	CO	❖	❖	❖	❖
Cognac Suede	D85	●	●	●	●
Dove White	DW	●	●		
Dove White Suede	D40	●	●		
Dove White W/Cinder Glaze Suede	E30	●	●		
Dove White W/Cocoa Glaze Suede	E31	●	●		
Dove White W/Cinder Glaze	B89	●	●		
Dove White W/Cocoa Glaze	A15	●	●		
Fawn	FN			❖	❖
Fawn Suede	D51			●	●
Ginger	C88	❖	❖	❖	❖
Ginger Suede	C19	●	●	●	●
Ginger W/Sable Glaze Suede	E15	●	●	●	●
Ginger W/Sable Glaze	C11	●	●	●	●
Greyloft	B65	●	●		
Greyloft Suede	D41	●	●		
Greyloft W/Sable Glaze Suede	E32	●	●		
Greyloft W/Sable Glaze	B66	●	●		
Hazel	C16			❖	❖
Hazel Suede	C17			●	●
Honey Spice	HS	❖	❖	❖	❖
Honey Spice Suede	D88	●	●	●	●

		2NGC1 Hanley Maple Roman	2NG1 Hanley Maple Square	2SWC1 Hanley Oak Roman	2SW1 Hanley Oak Square
Husk	B82			❖	❖
Husk Suede	C13			●	●
Kaffé	KA	❖	❖	❖	❖
Kaffé Suede	C27	●	●	●	●
Lagoon	E63	●	●		
Lagoon Suede	E64	●	●		
Linen	D90	●	●		
Linen Suede	D93	●	●		
Linen W/Cinder Glaze Suede	E33	●	●		
Linen W/Cocoa Glaze Suede	E34	●	●		
Linen W/Cinder Glaze	D96	●	●		
Linen W/Cocoa Glaze	D94	●	●		
Midnight	B69	●	●		
Midnight Suede	D42	●	●		
Midnight W/Onyx Glaze Suede	E35	●	●		
Midnight W/Onyx Glaze	B70	●	●		
Molasses	E58	❖	❖	❖	❖
Molasses Suede	E59	●	●	●	●
Moonshine	D98	●	●		
Moonshine Suede	E02	●	●		
Moonshine W/Cinder Glaze Suede	E36	●	●		
Moonshine W/Cocoa Glaze Suede	E37	●	●		
Moonshine W/Cinder Glaze	E04	●	●		
Moonshine W/Cocoa Glaze	E03	●	●		
Mushroom	A11	●	●		
Mushroom Suede	D43	●	●		
Mushroom W/Cinder Glaze Suede	E38	●	●		
Mushroom W/Cocoa Glaze Suede	E39	●	●		
Mushroom W/Cinder Glaze	B92	●	●		
Mushroom W/Cocoa Glaze	A12	●	●		
Natural	NA	❖	❖	❖	❖
Natural Suede	D89	●	●	●	●
Onyx	A21	●	●	●	●
Onyx Suede	D44	●	●	●	●
Pebble Grey	B83	●	●		
Pebble Grey Suede	D45	●	●		
Pebble Grey W/Cocoa Glaze Suede	E40	●	●		
Pebble Grey W/Cocoa Glaze	B84	●	●		
Peppercorn	PC	❖	❖	❖	❖
Peppercorn Suede	D53	●	●	●	●
Praline	PR	❖	❖	❖	❖
Praline Suede	C78	●	●	●	●
Praline W/Onyx Glaze Suede	E16	●	●		
Praline W/Onyx Glaze	A45	●	●		
Saddle	B81	❖	❖	❖	❖
Saddle Suede	C12	●	●	●	●
Slate	B64	❖	❖	❖	❖
Slate Suede	C72	●	●	●	●
Surfside	E65	●	●		
Surfside Suede	E66	●	●		
Unfinished	UF	❖	❖	❖	❖

Harper

1/2" Overlay

AC4C1	Cherry	Price Column D
AC4M1	Maple	Price Column B
AC4O1	Oak	Price Column A

Scan to view all Harper doors

½" Overlay Wall Base 3 Drawer

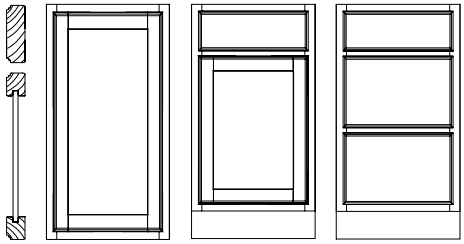

- Solid wood door frame with 2 3/16" stiles and rails
- Square veneer recessed panel on wall and base doors
- Slab drawer front
- Concealed hinge
- Finger Pull Rout (FPR) is available
- Decorative hardware is optional

Decorative Doors & Inserts Available

Camed Glass
- Chateau
- Palisades
- Penrose
- Victorian
- Yorkshire

Classic Glass
- Bistro
- Prepared for Glass
- Prism
- Shadow

Etched Glass
- Crossroads
- Lisbon
- Prairie
- Satina

Layered Glass
- Antiquity
- Mirage
- Silk
- Wintersday

Mullion Doors
- Showcase Mullion
- Traditional Mullion

Specialty Inserts
- Chalkboard Insert
- Leather Insert

Textured Glass
- Cascade
- Dolace
- Moire
- Ravenna
- Styx
- Vauxhall

Harper Finishes

❖ *Available as Standard*
● *Premium Upcharge*

		AC4C1 Harper Cherry	AC4M1 Harper Maple	AC4O1 Harper Oak
Autumn Blush	AB	❖		❖
Autumn Blush Suede	C21	●		●
Autumn Blush W/Onyx Glaze Suede	E10	●		●
Autumn Blush W/Onyx Glaze	A56	●		●
Baltic	D78	❖		❖
Baltic Suede	D80	●		●
Biscotti	BO		●	
Biscotti Suede	D36		●	
Biscotti W/Cinder Glaze Suede	E24		●	
Biscotti W/Cocoa Glaze Suede	E25		●	
Biscotti W/Cinder Glaze	B91		●	
Biscotti W/Cocoa Glaze	IG		●	
Bonsai	E69		●	
Bonsai Suede	E70		●	
Burmese	E67		●	
Burmese Suede	E68		●	
Cabernet	CT	❖	❖	
Cabernet Suede	C80	●	●	
Cabernet W/Onyx Glaze Suede	E11	●		
Cabernet W/Onyx Glaze	A58	●		
Cannon Grey	D81	❖		❖
Cannon Grey Suede	D83	●		●
Canvas	CV		●	
Canvas Suede	D37		●	
Canvas W/Cinder Glaze Suede	E26		●	
Canvas W/Cocoa Glaze Suede	E27		●	
Canvas W/Cinder Glaze	B90		●	
Canvas W/Cocoa Glaze	VG		●	
Chai	C29		●	
Chai Suede	D39		●	
Chai W/Cinder Glaze Suede	E28		●	
Chai W/Cocoa Glaze Suede	E29		●	
Chai W/Cinder Glaze	C32		●	
Chai W/Cocoa Glaze	C30		●	
Chestnut	CN		❖	
Chestnut Suede	C23		●	
Chestnut W/Onyx Glaze Suede	E12		●	
Chestnut W/Onyx Glaze	A54		●	
Chocolate	CC	❖	❖	
Chocolate Suede	D87	●	●	
Chocolate W/Ebony Glaze	EG	●		
Chocolate W/Ebony Glaze Suede	E13	●		
Cinnamon	CA	❖	❖	
Cinnamon Suede	C74	●	●	
Cinnamon W/Onyx Glaze Suede	E14	●	●	
Cinnamon W/Onyx Glaze	A48	●	●	
Cognac	CO	❖	❖	❖
Cognac Suede	D85	●	●	●
Dove White	DW		●	
Dove White Suede	D40		●	
Dove White W/Cinder Glaze Suede	E30		●	
Dove White W/Cocoa Glaze Suede	E31		●	
Dove White W/Cinder Glaze	B89		●	
Dove White W/Cocoa Glaze	A15		●	
Fawn	FN			❖
Fawn Suede	D51			●
Ginger	C88	❖	❖	❖
Ginger Suede	C19	●	●	●
Ginger W/Sable Glaze Suede	E15	●	●	●
Ginger W/Sable Glaze	C11	●	●	●
Greyloft	B65		●	
Greyloft Suede	D41		●	
Greyloft W/Sable Glaze Suede	E32		●	
Greyloft W/Sable Glaze	B66		●	
Hazel	C16	❖		❖
Hazel Suede	C17	●		●

		AC4C1 Harper Cherry	AC4M1 Harper Maple	AC4O1 Harper Oak
Honey Spice	HS	❖	❖	❖
Honey Spice Suede	D88	●	●	●
Husk	B82	❖		❖
Husk Suede	C13	●		●
Kaffé	KA	❖	❖	❖
Kaffé Suede	C27	●	●	●
Lagoon	E63		●	
Lagoon Suede	E64		●	
Linen	D90		●	
Linen Suede	D93		●	
Linen W/Cinder Glaze Suede	E33		●	
Linen W/Cocoa Glaze Suede	E34		●	
Linen W/Cinder Glaze	D96		●	
Linen W/Cocoa Glaze	D94		●	
Midnight	B69		●	
Midnight Suede	D42		●	
Midnight W/Onyx Glaze Suede	E35		●	
Midnight W/Onyx Glaze	B70		●	
Molasses	E58	❖	❖	❖
Molasses Suede	E59	●	●	●
Moonshine	D98		●	
Moonshine Suede	E02		●	
Moonshine W/Cinder Glaze Suede	E36		●	
Moonshine W/Cocoa Glaze Suede	E37		●	
Moonshine W/Cinder Glaze	E04		●	
Moonshine W/Cocoa Glaze	E03		●	
Mushroom	A11		●	
Mushroom Suede	D43		●	
Mushroom W/Cinder Glaze Suede	E38		●	
Mushroom W/Cocoa Glaze Suede	E39		●	
Mushroom W/Cinder Glaze	B92		●	
Mushroom W/Cocoa Glaze	A12		●	
Natural	NA	❖	❖	❖
Natural Suede	D89	●	●	●
Onyx	A21		●	●
Onyx Suede	D44		●	●
Pebble Grey	B83		●	
Pebble Grey Suede	D45		●	
Pebble Grey W/Cocoa Glaze Suede	E40		●	
Pebble Grey W/Cocoa Glaze	B84		●	
Peppercorn	PC	❖	❖	❖
Peppercorn Suede	D53	●	●	●
Praline	PR	❖	❖	❖
Praline Suede	C78	●	●	●
Praline W/Onyx Glaze Suede	E16		●	
Praline W/Onyx Glaze	A45		●	
Saddle	B81	❖	❖	❖
Saddle Suede	C12	●	●	●
Slate	B64	❖	❖	❖
Slate Suede	C72	●	●	●
Sunset	SU	❖		
Sunset Suede	D49	●		
Surfside	E65		●	
Surfside Suede	E66		●	
Unfinished	UF	❖	❖	❖

Harrington

Full Overlay

AA6C1 Cherry Price Column L

AA6M1 Maple Price Column J

Scan to view all Harrington doors

Full Overlay

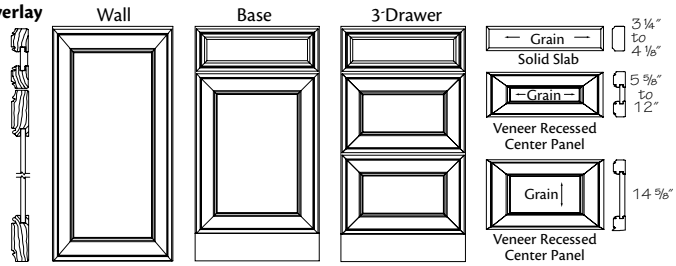

- Solid wood mitered door frame with 3" stiles and rails
- Square veneer recessed panel on wall and base doors
- Drawer front varies depending on height
- Concealed hinge
- Decorative hardware is required

Decorative Doors & Inserts Available

Aluminum Frame Glass
- Fresco Brushed Aluminum
- Vetro Brushed Aluminum

Camed Glass
- Chateau
- Classic Camed Insert
- Palisades
- Penrose
- Victorian
- Yorkshire

Classic Glass
- Bistro
- Prepared for Glass
- Prism
- Shadow

Etched Glass
- Crossroads
- Lisbon
- Modern Frosted Insert
- Prairie
- Satina

Layered Glass
- Antiquity
- Mirage
- Silk
- Wintersday

Mullion Doors
- Castlegate
- Evansville
- Hewitt
- Showcase Mullion
- Traditional Mullion

Specialty Inserts
- Chalkboard Insert
- Leather Insert

Textured Glass
- Cascade
- Dolace
- Modern Textured Insert
- Moire
- Ravenna
- Styx
- Vauxhall

Harrington Finishes

❖ *Available as Standard*
● *Premium Upcharge*

		AA6C1 Harrington Cherry Square	AA6M1 Harrington Maple Square
Autumn Blush	AB	❖	
Autumn Blush Suede	C21	●	
Autumn Blush W/Onyx Glaze Suede	E10	●	
Autumn Blush W/Onyx Glaze	A56	●	
Baltic	D78	❖	
Baltic Suede	D80	●	
Biscotti	BO		●
Biscotti Suede	D36		●
Biscotti W/Cinder Glaze Suede	E24		●
Biscotti W/Cocoa Glaze Suede	E25		●
Biscotti W/Cinder Glaze	B91		●
Biscotti W/Cocoa Glaze	IG		●
Bonsai	E69		●
Bonsai Suede	E70		●
Burmese	E67		●
Burmese Suede	E68		●
Cabernet	CT	❖	❖
Cabernet Suede	C80	●	●
Cabernet W/Onyx Glaze Suede	E11	●	
Cabernet W/Onyx Glaze	A58	●	
Cannon Grey	D81	❖	
Cannon Grey Suede	D83	●	
Canvas	CV		●
Canvas Suede	D37		●
Canvas W/Cinder Glaze Suede	E26		●
Canvas W/Cocoa Glaze Suede	E27		●
Canvas W/Cinder Glaze	B90		●
Canvas W/Cocoa Glaze	VG		●
Chai	C29		●
Chai Suede	D39		●
Chai W/Cinder Glaze Suede	E28		●
Chai W/Cocoa Glaze Suede	E29		●
Chai W/Cinder Glaze	C32		●
Chai W/Cocoa Glaze	C30		●
Chestnut	CN		❖
Chestnut Suede	C23		●
Chestnut W/Onyx Glaze Suede	E12		●
Chestnut W/Onyx Glaze	A54		●
Chocolate	CC	❖	❖
Chocolate Suede	D87	●	●
Chocolate W/Ebony Glaze	EG	●	
Chocolate W/Ebony Glaze Suede	E13	●	
Cinnamon	CA	❖	❖
Cinnamon Suede	C74	●	●
Cinnamon W/Onyx Glaze Suede	E14	●	●
Cinnamon W/Onyx Glaze	A48	●	●
Cognac	CO	❖	❖
Cognac Suede	D85	●	●
Dove White	DW		●
Dove White Suede	D40		●
Dove White W/Cinder Glaze Suede	E30		●
Dove White W/Cocoa Glaze Suede	E31		●
Dove White W/Cinder Glaze	B89		●
Dove White W/Cocoa Glaze	A15		●
Ginger	C88	❖	❖
Ginger Suede	C19	●	●
Ginger W/Sable Glaze Suede	E15	●	●
Ginger W/Sable Glaze	C11	●	●
Greyloft	B65		●
Greyloft Suede	D41		●
Greyloft W/Sable Glaze Suede	E32		●
Greyloft W/Sable Glaze	B66		●
Hazel	C16	❖	
Hazel Suede	C17	●	
Honey Spice	HS	❖	❖
Honey Spice Suede	D88	●	●
Husk	B82	❖	
Husk Suede	C13	●	
Kaffé	KA	❖	❖
Kaffé Suede	C27	●	●
Lagoon	E63		●
Lagoon Suede	E64		●
Linen	D90		●
Linen Suede	D93		●
Linen W/Cinder Glaze Suede	E33		●
Linen W/Cocoa Glaze Suede	E34		●
Linen W/Cinder Glaze	D96		●
Linen W/Cocoa Glaze	D94		●
Midnight	B69		●
Midnight Suede	D42		●
Midnight W/Onyx Glaze Suede	E35		●
Midnight W/Onyx Glaze	B70		●
Molasses	E58	❖	❖
Molasses Suede	E59	●	●
Moonshine	D98		●
Moonshine Suede	E02		●
Moonshine W/Cinder Glaze Suede	E36		●
Moonshine W/Cocoa Glaze Suede	E37		●
Moonshine W/Cinder Glaze	E04		●
Moonshine W/Cocoa Glaze	E03		●
Mushroom	A11		●
Mushroom Suede	D43		●
Mushroom W/Cinder Glaze Suede	E38		●
Mushroom W/Cocoa Glaze Suede	E39		●
Mushroom W/Cinder Glaze	B92		●
Mushroom W/Cocoa Glaze	A12		●
Natural	NA	❖	❖
Natural Suede	D89	●	●
Onyx	A21		●
Onyx Suede	D44		●
Pebble Grey	B83		●
Pebble Grey Suede	D45		●
Pebble Grey W/Cocoa Glaze Suede	E40		●
Pebble Grey W/Cocoa Glaze	B84		●
Peppercorn	PC	❖	❖
Peppercorn Suede	D53	●	●
Praline	PR	❖	❖
Praline Suede	C78	●	●
Praline W/Onyx Glaze Suede	E16		●
Praline W/Onyx Glaze	A45		●
Saddle	B81	❖	❖
Saddle Suede	C12	●	●
Slate	B64	❖	❖
Slate Suede	C72	●	●
Sunset	SU	❖	
Sunset Suede	D49	●	
Surfside	E65		●
Surfside Suede	E66		●
Unfinished	UF	❖	❖

Jamison

Full Overlay

AA5C1 Cherry Price Column P

AA5M1 Maple Price Column O

Scan to view all Jamison doors

Full Overlay

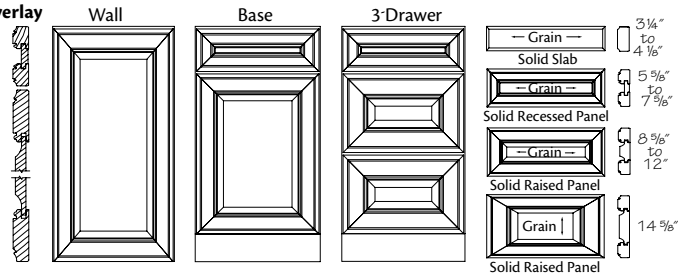

- Solid wood mitered door frame with 3″ stiles and rails
- Square solid raised panel on wall and base doors
- Drawer front varies depending on height
- Concealed hinge
- Decorative hardware is required

Decorative Doors & Inserts Available

Aluminum Frame Glass
- Fresco Brushed Aluminum
- Vetro Brushed Aluminum

Camed Glass
- Chateau
- Classic Camed Insert
- Palisades
- Penrose
- Victorian
- Yorkshire

Classic Glass
- Bistro
- Prepared for Glass
- Prism
- Shadow

Etched Glass
- Crossroads
- Lisbon
- Modern Frosted Insert
- Prairie
- Satina

Layered Glass
- Antiquity
- Mirage
- Silk
- Wintersday

Mullion Doors
- Castlegate
- Evansville
- Hewitt
- Showcase Mullion
- Traditional Mullion

Specialty Inserts
- Chalkboard Insert
- Leather Insert

Textured Glass
- Cascade
- Dolace
- Modern Textured Insert
- Moire
- Ravenna
- Styx
- Vauxhall

Jamison Finishes

❖ *Available as Standard*
● *Premium Upcharge*

		AA5C1 Jamison Cherry Square	AA5M1 Jamison Maple Square
Aged Concrete	E06		●
Aged Papyrus	E05		●
Aged River Rock	E07		●
Autumn Blush	AB	❖	
Autumn Blush Suede	C21	●	
Autumn Blush W/Onyx Glaze Suede	E10	●	
Autumn Blush W/Onyx Glaze	A56	●	
Baltic	D78	❖	
Baltic Suede	D80	●	
Biscotti	BO		●
Biscotti Suede	D36		●
Biscotti W/Cinder Glaze Suede	E24		●
Biscotti W/Cocoa Glaze Suede	E25		●
Biscotti W/Cinder Glaze	B91		●
Biscotti W/Cocoa Glaze	IG		●
Bonsai	E69		●
Bonsai Suede	E70		●
Burmese	E67		●
Burmese Suede	E68		●
Burnished Autumn Blush	BA	●	
Burnished Autumn Blush Suede	E17	●	
Burnished Cabernet	BT	●	
Burnished Cabernet Suede	E18	●	
Burnished Chestnut	BH		●
Burnished Chestnut Suede	E19		●
Burnished Chocolate	BL	●	
Burnished Chocolate Suede	E20	●	
Burnished Cinnamon	A51	●	●
Burnished Cinnamon Suede	E21	●	●
Burnished Ginger	BE	●	●
Burnished Ginger Suede	E22	●	●
Burnished Praline	BP		●
Burnished Praline Suede	E23		●
Cabernet	CT	❖	❖
Cabernet Suede	C80	●	●
Cabernet W/Onyx Glaze Suede	E11	●	
Cabernet W/Onyx Glaze	A58	●	
Cannon Grey	D81	❖	
Cannon Grey Suede	D83	●	
Canvas	CV		●
Canvas Suede	D37		●
Canvas W/Cinder Glaze Suede	E26		●
Canvas W/Cocoa Glaze Suede	E27		●
Canvas W/Cinder Glaze	B90		●
Canvas W/Cocoa Glaze	VG		●
Chai	C29		●
Chai Suede	D39		●
Chai W/Cinder Glaze Suede	E28		●
Chai W/Cocoa Glaze Suede	E29		●
Chai W/Cinder Glaze	C32		●
Chai W/Cocoa Glaze	C30		●
Chestnut	CN		❖
Chestnut Suede	C23		●
Chestnut W/Onyx Glaze Suede	E12		●
Chestnut W/Onyx Glaze	A54		●
Chocolate	CC	❖	❖
Chocolate Suede	D87	●	●
Chocolate W/Ebony Glaze	EG	●	
Chocolate W/Ebony Glaze Suede	E13	●	
Cinnamon	CA	❖	❖
Cinnamon Suede	C74	●	●
Cinnamon W/Onyx Glaze Suede	E14	●	●
Cinnamon W/Onyx Glaze	A48	●	●
Cognac	CO	❖	❖
Cognac Suede	D85	●	●
Distressed Autumn Blush	C22	●	
Distressed Baltic	D79	●	
Distressed Cabernet	C87	●	●
Distressed Cannon Grey	D82	●	
Distressed Chestnut	C24		●
Distressed Chocolate	D86	●	●
Distressed Cinnamon	C75	●	●
Distressed Cognac	D84	●	●
Distressed Ginger	C20	●	●
Distressed Hazel	C18	●	●
Distressed Husk	C15	●	●
Distressed Kaffé	C28	●	●
Distressed Molasses	E60	●	●
Distressed Peppercorn	C86	●	●
Distressed Praline	C79	●	●
Distressed Saddle	C14	●	●
Distressed Slate	C73	●	●
Distressed Sunset	D50	●	
Dove White	DW		●
Dove White Suede	D40		●
Dove White W/Cinder Glaze Suede	E30		●
Dove White W/Cocoa Glaze Suede	E31		●
Dove White W/Cinder Glaze	B89		●
Dove White W/Cocoa Glaze	A15		●
Ginger	C88	❖	❖
Ginger Suede	C19	●	●
Ginger W/Sable Glaze Suede	E15	●	●
Ginger W/Sable Glaze	C11	●	●
Greyloft	B65		●
Greyloft Suede	D41		●
Greyloft W/Sable Glaze Suede	E32		●
Greyloft W/Sable Glaze	B66		●
Hazel	C16	❖	
Hazel Suede	C17	●	
Honey Spice	HS	❖	❖
Honey Spice Suede	D88	●	●
Husk	B82	❖	
Husk Suede	C13	●	
Kaffé	KA	❖	❖
Kaffé Suede	C27	●	●
Lagoon	E63		●
Lagoon Suede	E64		●
Linen	D90		●
Linen Suede	D93		●
Linen W/Cinder Glaze Suede	E33		●
Linen W/Cocoa Glaze Suede	E34		●
Linen W/Cinder Glaze	D96		●
Linen W/Cocoa Glaze	D94		●
Midnight	B69		●
Midnight Suede	D42		●
Midnight W/Onyx Glaze Suede	E35		●
Midnight W/Onyx Glaze	B70		●
Molasses	E58	❖	❖
Molasses Suede	E59	●	●
Moonshine	D98		●
Moonshine Suede	E02		●
Moonshine W/Cinder Glaze Suede	E36		●
Moonshine W/Cocoa Glaze Suede	E37		●
Moonshine W/Cinder Glaze	E04		●
Moonshine W/Cocoa Glaze	E03		●
Mushroom	A11		●
Mushroom Suede	D43		●
Mushroom W/Cinder Glaze Suede	E38		●
Mushroom W/Cocoa Glaze Suede	E39		●
Mushroom W/Cinder Glaze	B92		●
Mushroom W/Cocoa Glaze	A12		●
Natural	NA	❖	❖
Natural Suede	D89	●	●
Onyx	A21		●
Onyx Suede	D44		●
Pebble Grey	B83		●
Pebble Grey Suede	D45		●
Pebble Grey W/Cocoa Glaze Suede	E40		●
Pebble Grey W/Cocoa Glaze	B84		●
Peppercorn	PC	❖	❖
Peppercorn Suede	D53	●	●
Praline	PR	❖	❖
Praline Suede	C78	●	●
Praline W/Onyx Glaze Suede	E16		●
Praline W/Onyx Glaze	A45		●
Saddle	B81	❖	❖
Saddle Suede	C12	●	●
Slate	B64	❖	❖
Slate Suede	C72	●	●
Sunset	SU	❖	
Sunset Suede	D49	●	
Surfside	E65		●
Surfside Suede	E66		●
Unfinished	UF	❖	❖
Vintage Biscotti	VS	●	
Vintage Biscotti Suede	E41	●	
Vintage Canvas	VC	●	
Vintage Canvas Suede	E42	●	
Vintage Chai	C35	●	
Vintage Chai Suede	E43	●	
Vintage Dove White	VD	●	
Vintage Dove White Suede	E44	●	
Vintage Greyloft	B67	●	
Vintage Greyloft Suede	E45	●	
Vintage Linen	D91	●	
Vintage Linen Suede	E46	●	
Vintage Midnight	B71	●	
Vintage Midnight Suede	E47	●	
Vintage Moonshine	D99	●	
Vintage Moonshine Suede	E48	●	
Vintage Mushroom	A13	●	
Vintage Mushroom Suede	E49	●	
Vintage Onyx	VO	●	
Vintage Onyx Suede	E50	●	
Vintage Pebble Grey	B86	●	
Vintage Pebble Grey Suede	E51	●	

New Jovana

Full Overlay

AJ2C1	Cherry	Price Column O
AJ2M1	Maple	Price Column M

Grey color coding indicates new product, size or code.

Scan to view all Jovana doors

Full Overlay

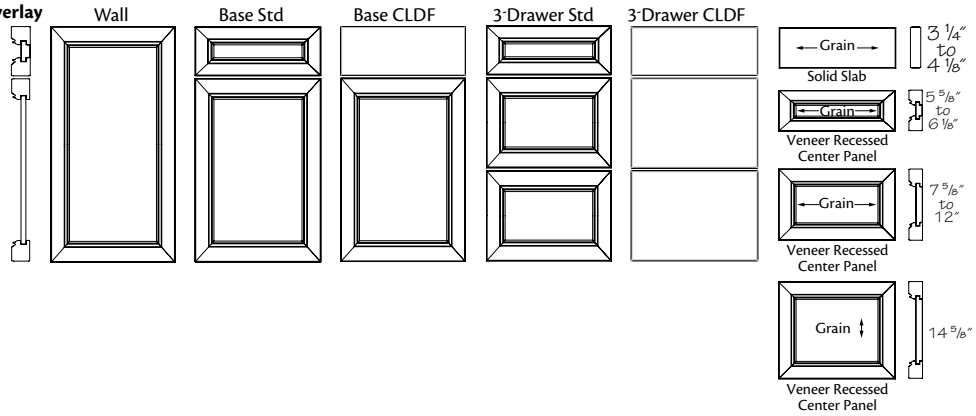

- Solid wood mitered door frame with 2 5/8" stiles and rails
- Square veneer recessed panel on wall and base doors
- Five-piece drawer front
- Classic Drawer Front (CLDF) option available
- 5 5/8" and 6 1/8" high drawer fronts have 2 1/4" stiles and rails
- Concealed hinge
- Decorative hardware is required

Decorative Doors & Inserts Available

Aluminum Frame Glass
- Fresco Brushed Aluminum
- Vetro Brushed Aluminum

Camed Glass
- Chateau
- Classic Camed Insert
- Palisades
- Penrose
- Victorian
- Yorkshire

Classic Glass
- Bistro
- Prepared for Glass
- Prism
- Shadow

Etched Glass
- Crossroads
- Lisbon
- Modern Frosted Insert
- Prairie
- Satina

Layered Glass
- Antiquity
- Mirage
- Silk
- Wintersday

Mullion Doors
- Ambry
- Castlegate
- Evansville
- Hewitt
- Showcase Mullion
- Traditional Mullion

Specialty Inserts
- Chalkboard Insert
- Leather Insert

Textured Glass
- Cascade
- Dolace
- Modern Textured Insert
- Moire
- Ravenna
- Styx
- Vauxhall

Jovana Finishes

❖ *Available as Standard*
● *Premium Upcharge*

		AJ2C1 Jovana Cherry	AJ2M1 Jovana Maple
Autumn Blush	AB	❖	
Autumn Blush Suede	C21	●	
Autumn Blush W/Onyx Glaze Suede	E10	●	
Autumn Blush W/Onyx Glaze	A56	●	
Baltic	D78	❖	
Baltic Suede	D80	●	
Biscotti	BO		●
Biscotti Suede	D36		●
Biscotti W/Cinder Glaze Suede	E24		●
Biscotti W/Cocoa Glaze Suede	E25		●
Biscotti W/Cinder Glaze	B91		●
Biscotti W/Cocoa Glaze	IG		●
Bonsai	E69		●
Bonsai Suede	E70		●
Burmese	E67		●
Burmese Suede	E68		●
Cabernet	CT	❖	❖
Cabernet Suede	C80	●	●
Cabernet W/Onyx Glaze Suede	E11	●	
Cabernet W/Onyx Glaze	A58	●	
Cannon Grey	D81	❖	
Cannon Grey Suede	D83	●	
Canvas	CV		●
Canvas Suede	D37		●
Canvas W/Cinder Glaze Suede	E26		●
Canvas W/Cocoa Glaze Suede	E27		●
Canvas W/Cinder Glaze	B90		●
Canvas W/Cocoa Glaze	VG		●
Chai	C29		●
Chai Suede	D39		●
Chai W/Cinder Glaze Suede	E28		●
Chai W/Cocoa Glaze Suede	E29		●
Chai W/Cinder Glaze	C32		●
Chai W/Cocoa Glaze	C30		●
Chestnut	CN		❖
Chestnut Suede	C23		●
Chestnut W/Onyx Glaze Suede	E12		●
Chestnut W/Onyx Glaze	A54		●
Chocolate	CC	❖	❖
Chocolate Suede	D87	●	●
Chocolate W/Ebony Glaze	EG	●	
Chocolate W/Ebony Glaze Suede	E13	●	
Cinnamon	CA	❖	❖
Cinnamon Suede	C74	●	●
Cinnamon W/Onyx Glaze Suede	E14	●	●
Cinnamon W/Onyx Glaze	A48	●	●
Cognac	CO	❖	❖
Cognac Suede	D85	●	●
Dove White	DW		●
Dove White Suede	D40		●
Dove White W/Cinder Glaze Suede	E30		●
Dove White W/Cocoa Glaze Suede	E31		●
Dove White W/Cinder Glaze	B89		●
Dove White W/Cocoa Glaze	A15		●
Ginger	C88	❖	❖
Ginger Suede	C19	●	●
Ginger W/Sable Glaze Suede	E15	●	●
Ginger W/Sable Glaze	C11	●	●
Greyloft	B65		●
Greyloft Suede	D41		●
Greyloft W/Sable Glaze Suede	E32		●
Greyloft W/Sable Glaze	B66		●
Hazel	C16	❖	
Hazel Suede	C17	●	
Honey Spice	HS	❖	❖
Honey Spice Suede	D88	●	●
Husk	B82	❖	
Husk Suede	C13	●	
Kaffé	KA	❖	❖
Kaffé Suede	C27	●	●
Lagoon	E63		●
Lagoon Suede	E64		●
Linen	D90		●
Linen Suede	D93		●
Linen W/Cinder Glaze Suede	E33		●
Linen W/Cocoa Glaze Suede	E34		●
Linen W/Cinder Glaze	D96		●
Linen W/Cocoa Glaze	D94		●
Midnight	B69		●
Midnight Suede	D42		●
Midnight W/Onyx Glaze Suede	E35		●
Midnight W/Onyx Glaze	B70		●
Molasses	E58	❖	❖
Molasses Suede	E59	●	●
Moonshine	D98		●
Moonshine Suede	E02		●
Moonshine W/Cinder Glaze Suede	E36		●
Moonshine W/Cocoa Glaze Suede	E37		●
Moonshine W/Cinder Glaze	E04		●
Moonshine W/Cocoa Glaze	E03		●
Mushroom	A11		●
Mushroom Suede	D43		●
Mushroom W/Cinder Glaze Suede	E38		●
Mushroom W/Cocoa Glaze Suede	E39		●
Mushroom W/Cinder Glaze	B92		●
Mushroom W/Cocoa Glaze	A12		●
Natural	NA	❖	❖
Natural Suede	D89	●	●
Onyx	A21		●
Onyx Suede	D44		●
Pebble Grey	B83		●
Pebble Grey Suede	D45		●
Pebble Grey W/Cocoa Glaze Suede	E40		●
Pebble Grey W/Cocoa Glaze	B84		●
Peppercorn	PC	❖	❖
Peppercorn Suede	D53	●	●
Praline	PR	❖	❖
Praline Suede	C78	●	●
Praline W/Onyx Glaze Suede	E16		●
Praline W/Onyx Glaze	A45		●
Saddle	B81	❖	❖
Saddle Suede	C12	●	●
Slate	B64	❖	❖
Slate Suede	C72	●	●
Sunset	SU	❖	
Sunset Suede	D49	●	
Surfside	E65		●
Surfside Suede	E66		●
Unfinished	UF	❖	❖

Judson

Full Overlay

AB5C1 Cherry Price Column L

AB5M1 Maple Price Column J

Scan to view all Judson doors

Full Overlay

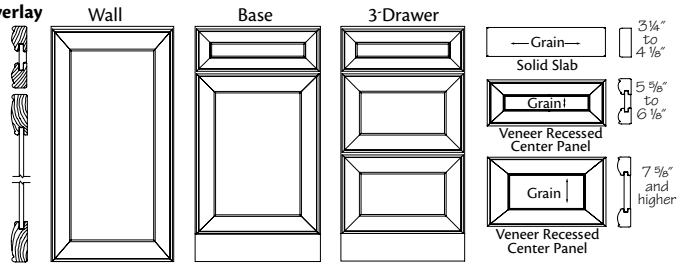

- Solid wood mitered door frame with 2 3/4" stiles and rails
- Square veneer recessed panel on wall and base doors
- Drawer front varies depending on height
- Wood grain orientation on drawer fronts is vertical, unless noted
- Concealed hinge
- Decorative hardware is required

Decorative Doors & Inserts Available

Aluminum Frame Glass
- Fresco Brushed Aluminum
- Vetro Brushed Aluminum

Camed Glass
- Chateau
- Classic Camed Insert
- Palisades
- Penrose
- Victorian
- Yorkshire

Classic Glass
- Bistro
- Prepared for Glass
- Prism
- Shadow

Etched Glass
- Crossroads
- Lisbon
- Modern Frosted Insert
- Prairie
- Satina

Layered Glass
- Antiquity
- Mirage
- Silk
- Wintersday

Mullion Doors
- Castlegate
- Evansville
- Hewitt
- Showcase Mullion
- Traditional Mullion

Specialty Inserts
- Chalkboard Insert
- Leather Insert

Textured Glass
- Cascade
- Dolace
- Modern Textured Insert
- Moire
- Ravenna
- Styx
- Vauxhall

Judson Finishes

❖ *Available as Standard*
● *Premium Upcharge*

		AB5C1 Judson Cherry Square	AB5M1 Judson Maple Square
Autumn Blush	AB	❖	
Autumn Blush Suede	C21	●	
Autumn Blush W/Onyx Glaze Suede	E10	●	
Autumn Blush W/Onyx Glaze	A56	●	
Baltic	D78	❖	
Baltic Suede	D80	●	
Biscotti	BO		●
Biscotti Suede	D36		●
Biscotti W/Cinder Glaze Suede	E24		●
Biscotti W/Cocoa Glaze Suede	E25		●
Biscotti W/Cinder Glaze	B91		●
Biscotti W/Cocoa Glaze	IG		●
Bonsai	E69		●
Bonsai Suede	E70		●
Burmese	E67		●
Burmese Suede	E68		●
Cabernet	CT	❖	❖
Cabernet Suede	C80	●	●
Cabernet W/Onyx Glaze Suede	E11	●	
Cabernet W/Onyx Glaze	A58	●	
Cannon Grey	D81	❖	
Cannon Grey Suede	D83	●	
Canvas	CV		●
Canvas Suede	D37		●
Canvas W/Cinder Glaze Suede	E26		●
Canvas W/Cocoa Glaze Suede	E27		●
Canvas W/Cinder Glaze	B90		●
Canvas W/Cocoa Glaze	VG		●
Chai	C29		●
Chai Suede	D39		●
Chai W/Cinder Glaze Suede	E28		●
Chai W/Cocoa Glaze Suede	E29		●
Chai W/Cinder Glaze	C32		●
Chai W/Cocoa Glaze	C30		●
Chestnut	CN		❖
Chestnut Suede	C23		●
Chestnut W/Onyx Glaze Suede	E12		●
Chestnut W/Onyx Glaze	A54		●
Chocolate	CC	❖	❖
Chocolate Suede	D87	●	●
Chocolate W/Ebony Glaze	EG	●	
Chocolate W/Ebony Glaze Suede	E13	●	
Cinnamon	CA	❖	❖
Cinnamon Suede	C74	●	●
Cinnamon W/Onyx Glaze Suede	E14	●	●
Cinnamon W/Onyx Glaze	A48	●	●
Cognac	CO	❖	❖
Cognac Suede	D85	●	●
Dove White	DW		●
Dove White Suede	D40		●
Dove White W/Cinder Glaze Suede	E30		●
Dove White W/Cocoa Glaze Suede	E31		●
Dove White W/Cinder Glaze	B89		●
Dove White W/Cocoa Glaze	A15		●
Ginger	C88	❖	❖
Ginger Suede	C19	●	●
Ginger W/Sable Glaze Suede	E15	●	●
Ginger W/Sable Glaze	C11	●	●
Greyloft	B65		●
Greyloft Suede	D41		●
Greyloft W/Sable Glaze Suede	E32		●
Greyloft W/Sable Glaze	B66		●
Hazel	C16	❖	
Hazel Suede	C17	●	
Honey Spice	HS	❖	❖
Honey Spice Suede	D88	●	●

		AB5C1 Judson Cherry Square	AB5M1 Judson Maple Square
Husk	B82	❖	
Husk Suede	C13	●	
Kaffé	KA	❖	❖
Kaffé Suede	C27	●	●
Lagoon	E63		●
Lagoon Suede	E64		●
Linen	D90		●
Linen Suede	D93		●
Linen W/Cinder Glaze Suede	E33		●
Linen W/Cocoa Glaze Suede	E34		●
Linen W/Cinder Glaze	D96		●
Linen W/Cocoa Glaze	D94		●
Midnight	B69		●
Midnight Suede	D42		●
Midnight W/Onyx Glaze Suede	E35		●
Midnight W/Onyx Glaze	B70		●
Molasses	E58	❖	❖
Molasses Suede	E59	●	●
Moonshine	D98		●
Moonshine Suede	E02		●
Moonshine W/Cinder Glaze Suede	E36		●
Moonshine W/Cocoa Glaze Suede	E37		●
Moonshine W/Cinder Glaze	E04		●
Moonshine W/Cocoa Glaze	E03		●
Mushroom	A11		●
Mushroom Suede	D43		●
Mushroom W/Cinder Glaze Suede	E38		●
Mushroom W/Cocoa Glaze Suede	E39		●
Mushroom W/Cinder Glaze	B92		●
Mushroom W/Cocoa Glaze	A12		●
Natural	NA	❖	❖
Natural Suede	D89	●	●
Onyx	A21		●
Onyx Suede	D44		●
Pebble Grey	B83		●
Pebble Grey Suede	D45		●
Pebble Grey W/Cocoa Glaze Suede	E40		●
Pebble Grey W/Cocoa Glaze	B84		●
Peppercorn	PC	❖	❖
Peppercorn Suede	D53	●	●
Praline	PR	❖	❖
Praline Suede	C78	●	●
Praline W/Onyx Glaze Suede	E16		●
Praline W/Onyx Glaze	A45		●
Saddle	B81	❖	❖
Saddle Suede	C12	●	●
Slate	B64	❖	❖
Slate Suede	C72	●	●
Sunset	SU	❖	
Sunset Suede	D49	●	
Surfside	E65		●
Surfside Suede	E66		●
Unfinished	UF	❖	❖

Kendrick

Full Overlay

AB6C1 Cherry Price Column R

AB6M1 Maple Price Column Q

Scan to view all Kendrick doors

Full Overlay

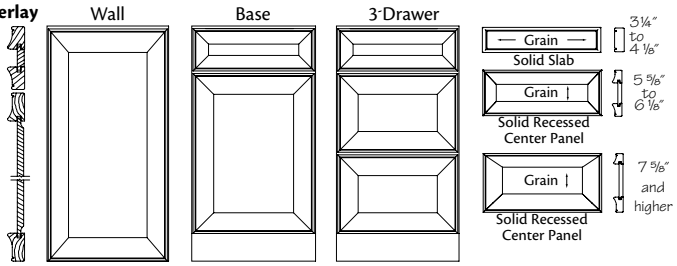

- Solid wood mitered door frame with 3" stiles and rails
- Square solid recessed panel on wall and base doors
- Drawer front varies depending on height
- Wood grain orientation on drawer fronts is vertical, unless noted
- Concealed hinge
- Decorative hardware is required

Decorative Doors & Inserts Available

Aluminum Frame Glass
- Fresco Brushed Aluminum
- Vetro Brushed Aluminum

Camed Glass
- Chateau
- Classic Camed Insert
- Palisades
- Penrose
- Victorian
- Yorkshire

Classic Glass
- Bistro
- Prepared for Glass
- Prism
- Shadow

Etched Glass
- Crossroads
- Lisbon
- Modern Frosted Insert
- Prairie
- Satina

Layered Glass
- Antiquity
- Mirage
- Silk
- Wintersday

Specialty Inserts
- Chalkboard Insert
- Leather Insert

Textured Glass
- Cascade
- Dolace
- Modern Textured Insert
- Moire
- Ravenna
- Styx
- Vauxhall

Kendrick Finishes

❖ *Available as Standard*
● *Premium Upcharge*

		AB6C1 Kendrick Cherry Square	AB6M1 Kendrick Maple Square
Aged Concrete	E06		●
Aged Papyrus	E05		●
Aged River Rock	E07		●
Autumn Blush	AB	❖	
Autumn Blush Suede	C21	●	
Autumn Blush W/Onyx Glaze Suede	E10	●	
Autumn Blush W/Onyx Glaze	A56	●	
Baltic	D78	❖	
Baltic Suede	D80	●	
Biscotti	BO		●
Biscotti Suede	D36		●
Biscotti W/Cinder Glaze Suede	E24		●
Biscotti W/Cocoa Glaze Suede	E25		●
Biscotti W/Cinder Glaze	B91		●
Biscotti W/Cocoa Glaze	IG		●
Bonsai	E69		●
Bonsai Suede	E70		●
Burmese	E67		●
Burmese Suede	E68		●
Burnished Autumn Blush	BA	●	
Burnished Autumn Blush Suede	E17	●	
Burnished Cabernet	BT	●	
Burnished Cabernet Suede	E18	●	
Burnished Chestnut	BH		●
Burnished Chestnut Suede	E19		●
Burnished Chocolate	BL	●	
Burnished Chocolate Suede	E20	●	
Burnished Cinnamon	A51	●	●
Burnished Cinnamon Suede	E21	●	●
Burnished Ginger	BE	●	●
Burnished Ginger Suede	E22	●	●
Burnished Praline	BP		●
Burnished Praline Suede	E23		●
Cabernet	CT	❖	❖
Cabernet Suede	C80	●	●
Cabernet W/Onyx Glaze Suede	E11	●	
Cabernet W/Onyx Glaze	A58	●	
Cannon Grey	D81	❖	
Cannon Grey Suede	D83	●	
Canvas	CV		●
Canvas Suede	D37		●
Canvas W/Cinder Glaze Suede	E26		●
Canvas W/Cocoa Glaze Suede	E27		●
Canvas W/Cinder Glaze	B90		●
Canvas W/Cocoa Glaze	VG		●
Chai	C29		●
Chai Suede	D39		●
Chai W/Cinder Glaze Suede	E28		●
Chai W/Cocoa Glaze Suede	E29		●
Chai W/Cinder Glaze	C32		●
Chai W/Cocoa Glaze	C30		●
Chestnut	CN		❖
Chestnut Suede	C23		●
Chestnut W/Onyx Glaze Suede	E12		●
Chestnut W/Onyx Glaze	A54		●
Chocolate	CC	❖	❖
Chocolate Suede	D87	●	●
Chocolate W/Ebony Glaze	EG	●	
Chocolate W/Ebony Glaze Suede	E13	●	
Cinnamon	CA	❖	❖
Cinnamon Suede	C74	●	●
Cinnamon W/Onyx Glaze Suede	E14	●	●
Cinnamon W/Onyx Glaze	A48	●	●
Cognac	CO	❖	❖
Cognac Suede	D85	●	●
Distressed Autumn Blush	C22	●	
Distressed Baltic	D79	●	
Distressed Cabernet	C87	●	●
Distressed Cannon Grey	D82	●	
Distressed Chestnut	C24		●
Distressed Chocolate	D86	●	●
Distressed Cinnamon	C75	●	●
Distressed Cognac	D84	●	●
Distressed Ginger	C20	●	●
Distressed Hazel	C18	●	●
Distressed Husk	C15	●	●
Distressed Kaffé	C28	●	●
Distressed Molasses	E60	●	●
Distressed Peppercorn	C86	●	●
Distressed Praline	C79	●	●
Distressed Saddle	C14	●	●
Distressed Slate	C73	●	●
Distressed Sunset	D50	●	
Dove White	DW		●
Dove White Suede	D40		●
Dove White W/Cinder Glaze Suede	E30		●
Dove White W/Cocoa Glaze Suede	E31		●
Dove White W/Cinder Glaze	B89		●
Dove White W/Cocoa Glaze	A15		●
Ginger	C88	❖	❖
Ginger Suede	C19	●	●
Ginger W/Sable Glaze Suede	E15	●	●
Ginger W/Sable Glaze	C11	●	●
Greyloft High-Gloss	D59		
Greyloft Suede	D41		●
Greyloft W/Sable Glaze Suede	E32		●
Greyloft W/Sable Glaze	B66		●
Hazel	C16	❖	
Hazel Suede	C17	●	
Honey Spice	HS	❖	❖
Honey Spice Suede	D88	●	●
Husk	B82	❖	
Husk Suede	C13	●	
Kaffé	KA	❖	❖
Kaffé Suede	C27	●	●
Lagoon	E63		●
Lagoon Suede	E64		●
Linen	D90		●
Linen Suede	D93		●
Linen W/Cinder Glaze Suede	E33		●
Linen W/Cocoa Glaze Suede	E34		●
Linen W/Cinder Glaze	D96		●
Linen W/Cocoa Glaze	D94		●
Midnight	B69		●
Midnight Suede	D42		●
Midnight W/Onyx Glaze Suede	E35		●
Midnight W/Onyx Glaze	B70		●
Molasses	E58	❖	❖
Molasses Suede	E59	●	●
Moonshine	D98		●
Moonshine Suede	E02		●
Moonshine W/Cinder Glaze Suede	E36		●
Moonshine W/Cocoa Glaze Suede	E37		●
Moonshine W/Cinder Glaze	E04		●
Moonshine W/Cocoa Glaze	E03		●
Mushroom	A11		●
Mushroom Suede	D43		●
Mushroom W/Cinder Glaze Suede	E38		●
Mushroom W/Cocoa Glaze Suede	E39		●
Mushroom W/Cinder Glaze	B92		●
Mushroom W/Cocoa Glaze	A12		●
Natural	NA	❖	❖
Natural Suede	D89	●	●
Onyx	A21		●
Onyx Suede	D44		●
Pebble Grey	B83		●
Pebble Grey Suede	D45		●
Pebble Grey W/Cocoa Glaze Suede	E40		●
Pebble Grey W/Cocoa Glaze	B84		●
Peppercorn	PC	❖	❖
Peppercorn Suede	D53	●	●
Praline	PR	❖	❖
Praline Suede	C78	●	●
Praline W/Onyx Glaze Suede	E16		●
Praline W/Onyx Glaze	A45		●
Saddle	B81	❖	❖
Saddle Suede	C12	●	●
Slate	B64	❖	❖
Slate Suede	C72	●	●
Sunset	SU	❖	
Sunset Suede	D49	●	
Surfside	E65		●
Surfside Suede	E66		●
Unfinished	UF	❖	❖
Vintage Biscotti	VS	●	
Vintage Biscotti Suede	E41	●	
Vintage Canvas	VC	●	
Vintage Canvas Suede	E42	●	
Vintage Chai	C35	●	
Vintage Chai Suede	E43	●	
Vintage Dove White	VD	●	
Vintage Dove White Suede	E44	●	
Vintage Greyloft	B67	●	
Vintage Greyloft Suede	E45	●	
Vintage Linen	D91	●	
Vintage Linen Suede	E46	●	
Vintage Midnight	B71	●	
Vintage Midnight Suede	E47	●	
Vintage Moonshine	D99	●	
Vintage Moonshine Suede	E48	●	
Vintage Mushroom	A13	●	
Vintage Mushroom Suede	E49	●	
Vintage Onyx	VO	●	
Vintage Onyx Suede	E50	●	
Vintage Pebble Grey	B86	●	
Vintage Pebble Grey Suede	E51	●	

Knollwood

Full Overlay

PKC1	Cherry	Price Column N
PKD1	EverCore™	Price Column J
PKM1	Maple	Price Column L

Scan to view all Knollwood doors

Grey color coding indicates new product, size or code.

Full Overlay

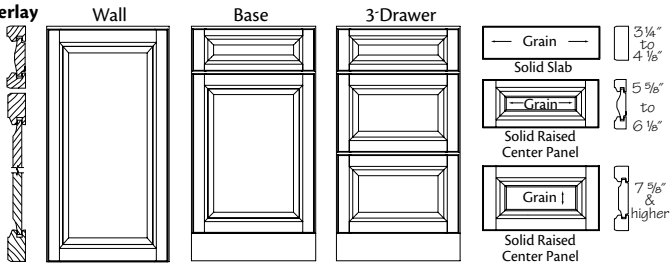

- Solid wood door frame with 2 3/16" stiles and rails, except EverCore™, which will be mechanically compressed wood fiber
- Solid square raised panel on wall and base doors, except EverCore™, which will be mechanically compressed wood fiber
- Drawer front varies depending on height
- Concealed hinge
- Decorative hardware is required

Decorative Doors & Inserts Available

Aluminum Frame Glass
- Fresco Brushed Aluminum
- Vetro Brushed Aluminum

Camed Glass
- Chateau
- Classic Camed Insert
- Palisades
- Penrose
- Victorian
- Yorkshire

Classic Glass
- Bistro
- Prepared for Glass
- Prism
- Shadow

Etched Glass
- Crossroads
- Lisbon
- Modern Frosted Insert
- Prairie
- Satina

Layered Glass
- Antiquity
- Mirage
- Silk
- Wintersday

Mullion Doors
- Castlegate■
- Evansville■
- Hewitt■
- Palladia■
- Raleigh■
- Showcase Mullion ■
- Traditional Mullion ■

Specialty Inserts
- Chalkboard Insert
- Leather Insert

Textured Glass
- Cascade
- Dolace
- Modern Textured Insert
- Moire
- Ravenna
- Styx
- Vauxhall

■ ***Not*** available in EverCore™ door styles

Knollwood Finishes

❖ *Available as Standard*
● *Premium Upcharge*

		PKC1 Knollwood Cherry Square	PKD1 Knollwood EverCore	PKM1 Knollwood Maple Square
Aged Concrete	E06			●
Aged Papyrus	E05			●
Aged River Rock	E07			●
Autumn Blush	AB	❖		
Autumn Blush Suede	C21	●		
Autumn Blush W/Onyx Glaze Suede	E10	●		
Autumn Blush W/Onyx Glaze	A56	●		
Baltic	D78	❖		
Baltic Suede	D80	●		
Biscotti	BO		●	●
Biscotti Suede	D36		●	●
Biscotti W/Cinder Glaze Suede	E24			●
Biscotti W/Cocoa Glaze Suede	E25			●
Biscotti W/Cinder Glaze	B91			●
Biscotti W/Cocoa Glaze	IG			●
Bonsai	E69		●	●
Bonsai Suede	E70		●	●
Burmese	E67		●	●
Burmese Suede	E68		●	●
Burnished Autumn Blush	BA	●		
Burnished Autumn Blush Suede	E17	●		
Burnished Cabernet	BT	●		
Burnished Cabernet Suede	E18	●		
Burnished Chestnut	BH			●
Burnished Chestnut Suede	E19			●
Burnished Chocolate	BL	●		
Burnished Chocolate Suede	E20	●		
Burnished Cinnamon	A51	●		●
Burnished Cinnamon Suede	E21	●		●
Burnished Ginger	BE	●		●
Burnished Ginger Suede	E22	●		●
Burnished Praline	BP			●
Burnished Praline Suede	E23			●
Cabernet	CT	❖		❖
Cabernet Suede	C80	●		●
Cabernet W/Onyx Glaze Suede	E11	●		
Cabernet W/Onyx Glaze	A58	●		
Cannon Grey	D81	❖		
Cannon Grey Suede	D83	●		
Canvas	CV		●	●
Canvas Suede	D37		●	●
Canvas W/Cinder Glaze Suede	E26			●
Canvas W/Cocoa Glaze Suede	E27			●
Canvas W/Cinder Glaze	B90			●
Canvas W/Cocoa Glaze	VG			●
Chai	C29		●	●
Chai Suede	D39		●	●
Chai W/Cinder Glaze Suede	E28			●
Chai W/Cocoa Glaze Suede	E29			●
Chai W/Cinder Glaze	C32			●
Chai W/Cocoa Glaze	C30			●
Chestnut	CN			❖
Chestnut Suede	C23			●
Chestnut W/Onyx Glaze Suede	E12			●
Chestnut W/Onyx Glaze	A54			●
Chocolate	CC	❖		❖
Chocolate Suede	D87	●		●
Chocolate W/Ebony Glaze	EG	●		
Chocolate W/Ebony Glaze Suede	E13	●		
Cinnamon	CA	❖		❖
Cinnamon Suede	C74	●		●
Cinnamon W/Onyx Glaze Suede	E14	●		●
Cinnamon W/Onyx Glaze	A48	●		●
Cognac	CO	❖		❖
Cognac Suede	D85	●		●
Distressed Autumn Blush	C22	●		
Distressed Baltic	D79	●		
Distressed Cabernet	C87	●		●
Distressed Cannon Grey	D82	●		
Distressed Chestnut	C24			●
Distressed Chocolate	D86	●		●
Distressed Cinnamon	C75	●		●
Distressed Cognac	D84	●		●
Distressed Ginger	C20	●		●
Distressed Hazel	C18	●		●
Distressed Husk	C15	●		●
Distressed Kaffé	C28	●		●
Distressed Molasses	E60	●		●
Distressed Peppercorn	C86	●		●
Distressed Praline	C79	●		●
Distressed Saddle	C14	●		●
Distressed Slate	C73	●		●
Distressed Sunset	D50	●		
Dove White	DW		●	●
Dove White Suede	D40		●	●
Dove White W/Cinder Glaze Suede	E30			●
Dove White W/Cocoa Glaze Suede	E31			●
Dove White W/Cinder Glaze	B89			●
Dove White W/Cocoa Glaze	A15			●
Ginger	C88	❖		❖
Ginger Suede	C19	●		●
Ginger W/Sable Glaze Suede	E15	●		●
Ginger W/Sable Glaze	C11	●		●
Greyloft	B65		●	●
Greyloft Suede	D41		●	●
Greyloft W/Sable Glaze Suede	E32			●
Greyloft W/Sable Glaze	B66			●
Hazel	C16	❖		
Hazel Suede	C17	●		
Honey Spice	HS	❖		❖
Honey Spice Suede	D88	●		●
Husk	B82	❖		
Husk Suede	C13	●		
Kaffé	KA	❖		❖
Kaffé Suede	C27	●		●
Lagoon	E63		●	●
Lagoon Suede	E64		●	●
Linen	D90		●	●
Linen Suede	D93		●	●
Linen W/Cinder Glaze Suede	E33			●
Linen W/Cocoa Glaze Suede	E34			●
Linen W/Cinder Glaze	D96			●
Linen W/Cocoa Glaze	D94			●
Midnight	B69		●	●
Midnight Suede	D42		●	●
Midnight W/Onyx Glaze Suede	E35			●
Midnight W/Onyx Glaze	B70			●
Molasses	E58	❖		❖
Molasses Suede	E59	●		●
Moonshine	D98		●	●
Moonshine Suede	E02		●	●
Moonshine W/Cinder Glaze Suede	E36			●
Moonshine W/Cocoa Glaze Suede	E37			●
Moonshine W/Cinder Glaze	E04			●
Moonshine W/Cocoa Glaze	E03			●
Mushroom	A11		●	●
Mushroom Suede	D43		●	●
Mushroom W/Cinder Glaze Suede	E38			●
Mushroom W/Cocoa Glaze Suede	E39			●
Mushroom W/Cinder Glaze	B92			●
Mushroom W/Cocoa Glaze	A12			●
Natural	NA	❖		❖
Natural Suede	D89	●		●
Onyx	A21		●	●
Onyx Suede	D44		●	●
Pebble Grey	B83		●	●
Pebble Grey Suede	D45		●	●
Pebble Grey W/Cocoa Glaze Suede	E40			●
Pebble Grey W/Cocoa Glaze	B84			●
Peppercorn	PC	❖		❖
Peppercorn Suede	D53	●		●
Praline	PR	❖		❖
Praline Suede	C78	●		●
Praline W/Onyx Glaze Suede	E16			●
Praline W/Onyx Glaze	A45			●
Saddle	B81	❖		❖
Saddle Suede	C12	●		●
Slate	B64	❖		❖
Slate Suede	C72	●		●
Sunset	SU	❖		
Sunset Suede	D49	●		
Surfside	E65		●	●
Surfside Suede	E66		●	●
Unfinished	UF	❖		❖
Vintage Biscotti	VS	●		
Vintage Biscotti Suede	E41	●		
Vintage Canvas	VC	●		
Vintage Canvas Suede	E42	●		
Vintage Chai	C35	●		
Vintage Chai Suede	E43	●		
Vintage Dove White	VD	●		
Vintage Dove White Suede	E44	●		
Vintage Greyloft	B67	●		
Vintage Greyloft Suede	E45	●		
Vintage Linen	D91	●		
Vintage Linen Suede	E46	●		
Vintage Midnight	B71	●		
Vintage Midnight Suede	E47	●		
Vintage Moonshine	D99	●		
Vintage Moonshine Suede	E48	●		
Vintage Mushroom	A13	●		
Vintage Mushroom Suede	E49	●		
Vintage Onyx	VO	●		
Vintage Onyx Suede	E50	●		
Vintage Pebble Grey	B86	●		
Vintage Pebble Grey Suede	E51	●		

Larken

Full Overlay

AJ4C1	Cherry	Price Column F
AJ4M1	Maple	Price Column E

Grey color coding indicates new product, size or code.

Scan to view all Larken doors

Full Overlay Wall Base 3" Drawer

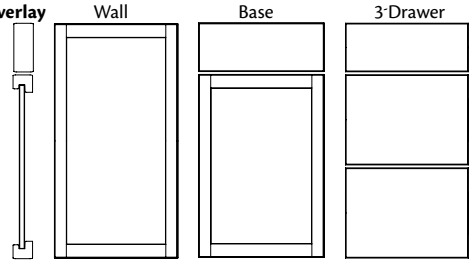

- Solid wood door frame with 1 3/4" stiles and rails on face (2 3/16" stiles and rails on back)
- Square veneer recessed panel on wall and base doors
- Slab drawer front
- Concealed hinge
- Decorative hardware is required
- ***Note:*** Glass doors and doors prepared for insert will default to Lyndale

Decorative Doors & Inserts Available

Aluminum Frame Glass
- Fresco Brushed Aluminum
- Vetro Brushed Aluminum

Camed Glass
- Chateau
- Classic Camed Insert
- Palisades
- Penrose
- Victorian
- Yorkshire

Classic Glass
- Bistro
- Prepared for Glass
- Prism
- Shadow

Etched Glass
- Crossroads
- Lisbon
- Modern Frosted Insert
- Prairie
- Satina

Layered Glass
- Antiquity
- Mirage
- Silk
- Wintersday

Mullion Doors
- Ambry
- Castlegate
- Evansville
- Hewitt
- Palladia
- Raleigh
- Showcase Mullion
- Traditional Mullion

Specialty Inserts
- Chalkboard Insert
- Leather Insert

Textured Glass
- Cascade
- Dolace
- Modern Textured Insert
- Moire
- Ravenna
- Styx
- Vauxhall

Larken Finishes

❖ *Available as Standard*
● *Premium Upcharge*

		AJ4C1 Larken Cherry	AJ4M1 Larken Maple
Autumn Blush	AB	❖	
Autumn Blush Suede	C21	●	
Autumn Blush W/Onyx Glaze Suede	E10	●	
Autumn Blush W/Onyx Glaze	A56	●	
Baltic	D78	❖	
Baltic Suede	D80	●	
Biscotti	BO		●
Biscotti Suede	D36		●
Biscotti W/Cinder Glaze Suede	E24		●
Biscotti W/Cocoa Glaze Suede	E25		●
Biscotti W/Cinder Glaze	B91		●
Biscotti W/Cocoa Glaze	IG		●
Bonsai	E69		●
Bonsai Suede	E70		●
Burmese	E67		●
Burmese Suede	E68		●
Cabernet	CT	❖	❖
Cabernet Suede	C80	●	●
Cabernet W/Onyx Glaze Suede	E11	●	
Cabernet W/Onyx Glaze	A58	●	
Cannon Grey	D81	❖	
Cannon Grey Suede	D83	●	
Canvas	CV		●
Canvas Suede	D37		●
Canvas W/Cinder Glaze Suede	E26		●
Canvas W/Cocoa Glaze Suede	E27		●
Canvas W/Cinder Glaze	B90		●
Canvas W/Cocoa Glaze	VG		●
Chai	C29		●
Chai Suede	D39		●
Chai W/Cinder Glaze Suede	E28		●
Chai W/Cocoa Glaze Suede	E29		●
Chai W/Cinder Glaze	C32		●
Chai W/Cocoa Glaze	C30		●
Chestnut	CN		❖
Chestnut Suede	C23		●
Chestnut W/Onyx Glaze Suede	E12		●
Chestnut W/Onyx Glaze	A54		●
Chocolate	CC	❖	❖
Chocolate Suede	D87	●	●
Chocolate W/Ebony Glaze	EG	●	
Chocolate W/Ebony Glaze Suede	E13	●	
Cinnamon	CA	❖	❖
Cinnamon Suede	C74	●	●
Cinnamon W/Onyx Glaze Suede	E14	●	●
Cinnamon W/Onyx Glaze	A48	●	●
Cognac	CO	❖	❖
Cognac Suede	D85	●	●
Dove White	DW		●
Dove White Suede	D40		●
Dove White W/Cinder Glaze Suede	E30		●
Dove White W/Cocoa Glaze Suede	E31		●
Dove White W/Cinder Glaze	B89		●
Dove White W/Cocoa Glaze	A15		●
Ginger	C88	❖	❖
Ginger Suede	C19	●	●
Ginger W/Sable Glaze Suede	E15	●	●
Ginger W/Sable Glaze	C11	●	●
Greyloft	B65		●
Greyloft Suede	D41		●
Greyloft W/Sable Glaze Suede	E32		●
Greyloft W/Sable Glaze	B66		●
Hazel	C16	❖	
Hazel Suede	C17	●	
Honey Spice	HS	❖	❖
Honey Spice Suede	D88	●	●
Husk	B82	❖	
Husk Suede	C13	●	
Kaffé	KA	❖	❖
Kaffé Suede	C27	●	●
Lagoon	E63		●
Lagoon Suede	E64		●
Linen	D90		●
Linen Suede	D93		●
Linen W/Cinder Glaze Suede	E33		●
Linen W/Cocoa Glaze Suede	E34		●
Linen W/Cinder Glaze	D96		●
Linen W/Cocoa Glaze	D94		●
Midnight	B69		●
Midnight Suede	D42		●
Midnight W/Onyx Glaze Suede	E35		●
Midnight W/Onyx Glaze	B70		●
Molasses	E58	❖	❖
Molasses Suede	E59	●	●
Moonshine	D98		●
Moonshine Suede	E02		●
Moonshine W/Cinder Glaze Suede	E36		●
Moonshine W/Cocoa Glaze Suede	E37		●
Moonshine W/Cinder Glaze	E04		●
Moonshine W/Cocoa Glaze	E03		●
Mushroom	A11		●
Mushroom Suede	D43		●
Mushroom W/Cinder Glaze Suede	E38		●
Mushroom W/Cocoa Glaze Suede	E39		●
Mushroom W/Cinder Glaze	B92		●
Mushroom W/Cocoa Glaze	A12		●
Natural	NA	❖	❖
Natural Suede	D89	●	●
Onyx	A21		●
Onyx Suede	D44		●
Pebble Grey	B83		●
Pebble Grey Suede	D45		●
Pebble Grey W/Cocoa Glaze Suede	E40		●
Pebble Grey W/Cocoa Glaze	B84		●
Peppercorn	PC	❖	❖
Peppercorn Suede	D53	●	●
Praline	PR	❖	❖
Praline Suede	C78	●	●
Praline W/Onyx Glaze Suede	E16		●
Praline W/Onyx Glaze	A45		●
Saddle	B81	❖	❖
Saddle Suede	C12	●	●
Slate	B64	❖	❖
Slate Suede	C72	●	●
Sunset	SU	❖	
Sunset Suede	D49	●	
Surfside	E65		●
Surfside Suede	E66		●
Unfinished	UF	❖	❖

Lasalle

Full Overlay

LBD1 Cherry Price Column M

Scan to view all Lasalle doors

Full Overlay

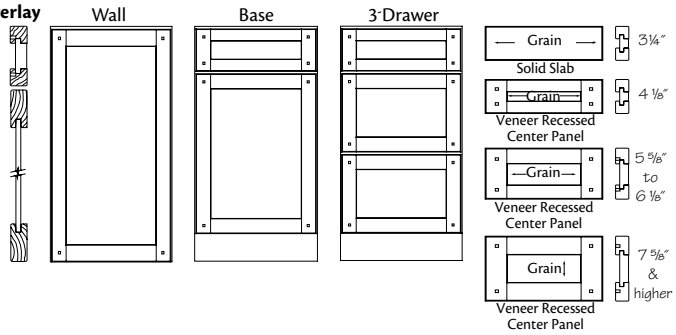

- Solid wood door frame with walnut pegs in 2 3/16" stiles and rails
- Square veneer recessed panel on wall and base doors
- Five-piece recessed drawer front with walnut pegs
- When drawer fronts are supplied as a solid slab, they will ***not*** have corner pegs
- Concealed hinge
- Decorative hardware is required

Decorative Doors & Inserts Available

Aluminum Frame Glass
- Fresco Brushed Aluminum
- Vetro Brushed Aluminum

Camed Glass
- Chateau
- Classic Camed Insert
- Palisades
- Penrose
- Victorian
- Yorkshire

Classic Glass
- Bistro
- Prepared for Glass
- Prism
- Shadow

Etched Glass
- Crossroads
- Lisbon
- Modern Frosted Insert
- Prairie
- Satina

Layered Glass
- Antiquity
- Mirage
- Silk
- Wintersday

Mullion Doors
- Ambry
- Castlegate
- Evansville
- Hewitt
- Palladia
- Raleigh
- Showcase Mullion
- Traditional Mullion

Specialty Inserts
- Chalkboard Insert
- Leather Insert

Textured Glass
- Cascade
- Dolace
- Modern Textured Insert
- Moire
- Ravenna
- Styx
- Vauxhall

Lasalle Finishes

❖ *Available as Standard*
● *Premium Upcharge*

		Lasalle	LBD1
Autumn Blush	AB	❖	
Autumn Blush Suede	C21	●	
Autumn Blush W/Onyx Glaze Suede	E10	●	
Autumn Blush W/Onyx Glaze	A56	●	
Baltic	D78	❖	
Baltic Suede	D80	●	
Cabernet	CT	❖	
Cabernet Suede	C80	●	
Cabernet W/Onyx Glaze Suede	E11	●	
Cabernet W/Onyx Glaze	A58	●	
Cannon Grey	D81	❖	
Cannon Grey Suede	D83	●	
Chocolate	CC	❖	
Chocolate Suede	D87	●	
Chocolate W/Ebony Glaze	EG	●	
Chocolate W/Ebony Glaze Suede	E13	●	
Cinnamon	CA	❖	
Cinnamon Suede	C74	●	
Cinnamon W/Onyx Glaze Suede	E14	●	
Cinnamon W/Onyx Glaze	A48	●	
Cognac	CO	❖	
Cognac Suede	D85	●	
Ginger	C88	❖	
Ginger Suede	C19	●	
Ginger W/Sable Glaze Suede	E15	●	
Ginger W/Sable Glaze	C11	●	
Hazel	C16	❖	
Hazel Suede	C17	●	
Honey Spice	HS	❖	
Honey Spice Suede	D88	●	
Husk	B82	❖	
Husk Suede	C13	●	
Kaffé	KA	❖	
Kaffé Suede	C27	●	
Molasses	E58	❖	
Molasses Suede	E59	●	
Natural	NA	❖	
Natural Suede	D89	●	
Peppercorn	PC	❖	
Peppercorn Suede	D53	●	
Praline	PR	❖	
Praline Suede	C78	●	
Saddle	B81	❖	
Saddle Suede	C12	●	
Slate	B64	❖	
Slate Suede	C72	●	
Sunset	SU	❖	
Sunset Suede	D49	●	
Unfinished	UF	❖	

Layden

Full Overlay

AH2L1	Cannon Grey Wood-Grain Foil	Price Column D
AH2W1	Dove White Wood-Grain Foil	Price Column D

Scan to view all Layden doors

Full Overlay

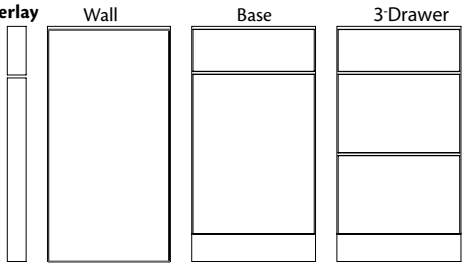

- Thermofoil on 3/4" thick MDF substrate
- Slab with square banded edges on wall & base doors
- Slab drawer front
- Wood grain orientation on door and drawer fronts is vertical; ***not*** book matched between pieces
- Concealed hinge
- Decorative hardware is required
- ***Note***: Cabinet box and most accessories will have a coordinating smooth white finish for Dove White Wood-Grain Foil or an oak texture finish for Cannon Grey Wood-Grain Foil door styles; select accessories will be offered in matching foil material (refer to individual items for specific details)

Decorative Doors & Inserts Available

Aluminum Frame Glass

- Fresco Brushed Aluminum
- Vetro Brushed Aluminum

Layden Finishes

❖ *Available as Standard*
● *Premium Upcharge*

		Layden Cannon Grey AH2L1	Layden Dove White AH2W1
Cannon Grey Wood Grain	D81O	❖	
Dove White Wood Grain	WH		❖

Lincoln

Full Overlay

AB3C1 Cherry Price Column R

AB3M1 Maple Price Column Q

Scan to view all Lincoln doors

Full Overlay

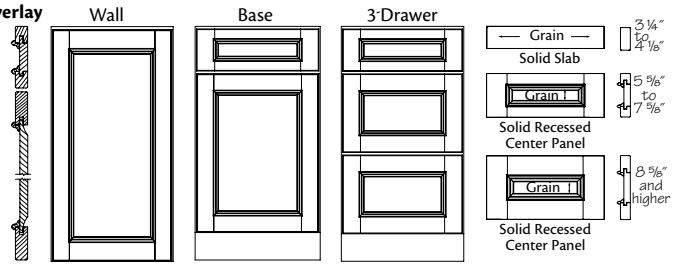

- Solid wood door frame with 2 5/8" stiles and rails
- Square solid recessed panel on wall and base doors
- Applied decorative molding
- Drawer front varies depending on height
- Wood grain orientation on drawer fronts is vertical, unless noted
- Concealed hinge
- Decorative hardware is required

Decorative Doors & Inserts Available

Aluminum Frame Glass
- Fresco Brushed Aluminum
- Vetro Brushed Aluminum

Camed Glass
- Chateau
- Classic Camed Insert
- Palisades
- Penrose
- Victorian
- Yorkshire

Classic Glass
- Bistro
- Prepared for Glass
- Shadow

Etched Glass
- Crossroads
- Lisbon
- Prairie
- Satina

Layered Glass
- Antiquity
- Mirage
- Silk
- Wintersday

Mullion Doors
- Ambry
- Castlegate
- Evansville
- Hewitt
- Showcase Mullion
- Traditional Mullion

Specialty Inserts
- Chalkboard Insert
- Leather Insert

Textured Glass
- Cascade
- Dolace
- Modern Textured Insert
- Moire
- Ravenna
- Styx
- Vauxhall

Lincoln Finishes

❖ *Available as Standard*
● *Premium Upcharge*

		AB3C1 Lincoln Cherry Square	AB3M1 Lincoln Maple Square
Aged Concrete	E06		●
Aged Papyrus	E05		●
Aged River Rock	E07		●
Autumn Blush	AB	❖	
Autumn Blush Suede	C21	●	
Autumn Blush W/Onyx Glaze Suede	E10	●	
Autumn Blush W/Onyx Glaze	A56	●	
Baltic	D78	❖	
Baltic Suede	D80	●	
Biscotti	BO		●
Biscotti Suede	D36		●
Biscotti W/Cinder Glaze Suede	E24		●
Biscotti W/Cocoa Glaze Suede	E25		●
Biscotti W/Cinder Glaze	B91		●
Biscotti W/Cocoa Glaze	IG		●
Bonsai	E69		●
Bonsai Suede	E70		●
Burmese	E67		●
Burmese Suede	E68		●
Burnished Autumn Blush	BA	●	
Burnished Autumn Blush Suede	E17	●	
Burnished Cabernet	BT	●	
Burnished Cabernet Suede	E18	●	
Burnished Chestnut	BH		●
Burnished Chestnut Suede	E19		●
Burnished Chocolate	BL	●	
Burnished Chocolate Suede	E20	●	
Burnished Cinnamon	A51	●	●
Burnished Cinnamon Suede	E21	●	●
Burnished Ginger	BE	●	●
Burnished Ginger Suede	E22	●	●
Burnished Praline	BP		●
Burnished Praline Suede	E23		●
Cabernet	CT	❖	❖
Cabernet Suede	C80	●	●
Cabernet W/Onyx Glaze Suede	E11	●	
Cabernet W/Onyx Glaze	A58	●	
Cannon Grey	D81	❖	
Cannon Grey Suede	D83	●	
Canvas	CV		●
Canvas Suede	D37		●
Canvas W/Cinder Glaze Suede	E26		●
Canvas W/Cocoa Glaze Suede	E27		●
Canvas W/Cinder Glaze	B90		●
Canvas W/Cocoa Glaze	VG		●
Chai	C29		●
Chai Suede	D39		●
Chai W/Cinder Glaze Suede	E28		●
Chai W/Cocoa Glaze Suede	E29		●
Chai W/Cinder Glaze	C32		●
Chai W/Cocoa Glaze	C30		●
Chestnut	CN		❖
Chestnut Suede	C23		●
Chestnut W/Onyx Glaze Suede	E12		●
Chestnut W/Onyx Glaze	A54		●
Chocolate	CC	❖	❖
Chocolate Suede	D87	●	●
Chocolate W/Ebony Glaze	EG	●	
Chocolate W/Ebony Glaze Suede	E13	●	
Cinnamon	CA	❖	❖
Cinnamon Suede	C74	●	●
Cinnamon W/Onyx Glaze Suede	E14	●	●
Cinnamon W/Onyx Glaze	A48	●	●
Cognac	CO	❖	❖
Cognac Suede	D85	●	●
Distressed Autumn Blush	C22	●	
Distressed Baltic	D79	●	
Distressed Cabernet	C87	●	●
Distressed Cannon Grey	D82	●	
Distressed Chestnut	C24		●
Distressed Chocolate	D86	●	●
Distressed Cinnamon	C75	●	●
Distressed Cognac	D84	●	●
Distressed Ginger	C20	●	●
Distressed Hazel	C18	●	●
Distressed Husk	C15	●	●
Distressed Kaffé	C28	●	●
Distressed Molasses	E60	●	●
Distressed Peppercorn	C86	●	●
Distressed Praline	C79	●	●
Distressed Saddle	C14	●	●
Distressed Slate	C73	●	●
Distressed Sunset	D50	●	
Dove White	DW		●
Dove White Suede	D40		●
Dove White W/Cinder Glaze Suede	E30		●
Dove White W/Cocoa Glaze Suede	E31		●
Dove White W/Cinder Glaze	B89		●
Dove White W/Cocoa Glaze	A15		●
Ginger	C88	❖	❖
Ginger Suede	C19	●	●
Ginger W/Sable Glaze Suede	E15	●	●
Ginger W/Sable Glaze	C11	●	●
Greyloft	B65		●
Greyloft Suede	D41		●
Greyloft W/Sable Glaze Suede	E32		●
Greyloft W/Sable Glaze	B66		●
Hazel	C16	❖	
Hazel Suede	C17	●	
Honey Spice	HS	❖	❖
Honey Spice Suede	D88	●	●
Husk	B82	❖	
Husk Suede	C13	●	
Kaffé	KA	❖	❖
Kaffé Suede	C27	●	●
Lagoon	E63		●
Lagoon Suede	E64		●
Linen	D90		●
Linen Suede	D93		●
Linen W/Cinder Glaze Suede	E33		●
Linen W/Cocoa Glaze Suede	E34		●
Linen W/Cinder Glaze	D96		●
Linen W/Cocoa Glaze	D94		●
Midnight	B69		●
Midnight Suede	D42		●
Midnight W/Onyx Glaze Suede	E35		●
Midnight W/Onyx Glaze	B70		●
Molasses	E58	❖	❖
Molasses Suede	E59	●	●
Moonshine	D98		●
Moonshine Suede	E02		●
Moonshine W/Cinder Glaze Suede	E36		●
Moonshine W/Cocoa Glaze Suede	E37		●
Moonshine W/Cinder Glaze	E04		●
Moonshine W/Cocoa Glaze	E03		●
Mushroom	A11		●
Mushroom Suede	D43		●
Mushroom W/Cinder Glaze Suede	E38		●
Mushroom W/Cocoa Glaze Suede	E39		●
Mushroom W/Cinder Glaze	B92		●
Mushroom W/Cocoa Glaze	A12		●
Natural	NA	❖	❖
Natural Suede	D89	●	●
Onyx	A21		●
Onyx Suede	D44		●
Pebble Grey	B83		●
Pebble Grey Suede	D45		●
Pebble Grey W/Cocoa Glaze Suede	E40		●
Pebble Grey W/Cocoa Glaze	B84		●
Peppercorn	PC	❖	❖
Peppercorn Suede	D53	●	●
Praline	PR	❖	❖
Praline Suede	C78	●	●
Praline W/Onyx Glaze Suede	E16		●
Praline W/Onyx Glaze	A45		●
Saddle	B81	❖	❖
Saddle Suede	C12	●	●
Slate	B64	❖	❖
Slate Suede	C72	●	●
Sunset	SU	❖	
Sunset Suede	D49	●	
Surfside	E65		●
Surfside Suede	E66		●
Unfinished	UF	❖	❖
Vintage Biscotti	VS	●	
Vintage Biscotti Suede	E41	●	
Vintage Canvas	VC	●	
Vintage Canvas Suede	E42	●	
Vintage Chai	C35	●	
Vintage Chai Suede	E43	●	
Vintage Dove White	VD	●	
Vintage Dove White Suede	E44	●	
Vintage Greyloft	B67	●	
Vintage Greyloft Suede	E45	●	
Vintage Linen	D91	●	
Vintage Linen Suede	E46	●	
Vintage Midnight	B71	●	
Vintage Midnight Suede	E47	●	
Vintage Moonshine	D99	●	
Vintage Moonshine Suede	E48	●	
Vintage Mushroom	A13	●	
Vintage Mushroom Suede	E49	●	
Vintage Onyx	VO	●	
Vintage Onyx Suede	E50	●	
Vintage Pebble Grey	B86	●	
Vintage Pebble Grey Suede	E51	●	

Lockeford

Full Overlay

LCC1	Cherry	Price Column P
LCM1	Maple	Price Column O

Scan to view all Lockeford doors

Full Overlay

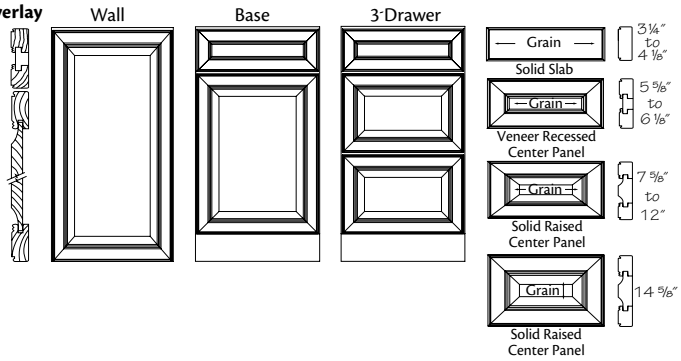

- Solid wood mitered beaded door frame with 2 3/16″ stiles and rails
- Square solid raised panel on wall and base doors
- Five-piece beaded drawer front
- Drawer front varies depending on height
- Concealed hinge
- Decorative hardware is required

Decorative Doors & Inserts Available

Aluminum Frame Glass
- Fresco Brushed Aluminum
- Vetro Brushed Aluminum

Camed Glass
- Chateau
- Classic Camed Insert
- Palisades
- Penrose
- Victorian
- Yorkshire

Classic Glass
- Bistro
- Prepared for Glass
- Prism
- Shadow

Etched Glass
- Crossroads
- Lisbon
- Modern Frosted Insert
- Prairie
- Satina

Layered Glass
- Antiquity
- Mirage
- Silk
- Wintersday

Mullion Doors
- Castlegate
- Evansville
- Hewitt
- Palladia
- Raleigh
- Showcase Mullion
- Traditional Mullion

Specialty Inserts
- Chalkboard Insert
- Leather Insert

Textured Glass
- Cascade
- Dolace
- Modern Textured Insert
- Moire
- Ravenna
- Styx
- Vauxhall

Lockeford Finishes

❖ *Available as Standard*
● *Premium Upcharge*

		LCC1 Lockeford Cherry	LCM1 Lockeford Maple
Aged Concrete	E06		●
Aged Papyrus	E05		●
Aged River Rock	E07		●
Autumn Blush	AB	❖	
Autumn Blush Suede	C21	●	
Autumn Blush W/Onyx Glaze Suede	E10	●	
Autumn Blush W/Onyx Glaze	A56	●	
Baltic	D78	❖	
Baltic Suede	D80	●	
Biscotti	BO		●
Biscotti Suede	D36		●
Biscotti W/Cinder Glaze Suede	E24		●
Biscotti W/Cocoa Glaze Suede	E25		●
Biscotti W/Cinder Glaze	B91		●
Biscotti W/Cocoa Glaze	IG		●
Bonsai	E69		●
Bonsai Suede	E70		●
Burmese	E67		●
Burmese Suede	E68		●
Burnished Autumn Blush	BA	●	
Burnished Autumn Blush Suede	E17	●	
Burnished Cabernet	BT	●	
Burnished Cabernet Suede	E18	●	
Burnished Chestnut	BH		●
Burnished Chestnut Suede	E19		●
Burnished Chocolate	BL	●	
Burnished Chocolate Suede	E20	●	
Burnished Cinnamon	A51	●	●
Burnished Cinnamon Suede	E21	●	●
Burnished Ginger	BE	●	●
Burnished Ginger Suede	E22	●	●
Burnished Praline	BP		●
Burnished Praline Suede	E23		●
Cabernet	CT	❖	❖
Cabernet Suede	C80	●	●
Cabernet W/Onyx Glaze Suede	E11	●	
Cabernet W/Onyx Glaze	A58	●	
Cannon Grey	D81	❖	
Cannon Grey Suede	D83	●	
Canvas	CV		●
Canvas Suede	D37		●
Canvas W/Cinder Glaze Suede	E26		●
Canvas W/Cocoa Glaze Suede	E27		●
Canvas W/Cinder Glaze	B90		●
Canvas W/Cocoa Glaze	VG		●
Chai	C29		●
Chai Suede	D39		●
Chai W/Cinder Glaze Suede	E28		●
Chai W/Cocoa Glaze Suede	E29		●
Chai W/Cinder Glaze	C32		●
Chai W/Cocoa Glaze	C30		●
Chestnut	CN		❖
Chestnut Suede	C23		●
Chestnut W/Onyx Glaze Suede	E12		●
Chestnut W/Onyx Glaze	A54		●
Chocolate	CC	❖	❖
Chocolate Suede	D87	●	●
Chocolate W/Ebony Glaze	EG	●	
Chocolate W/Ebony Glaze Suede	E13	●	
Cinnamon	CA	❖	❖
Cinnamon Suede	C74	●	●
Cinnamon W/Onyx Glaze Suede	E14	●	●
Cinnamon W/Onyx Glaze	A48	●	●
Cognac	CO	❖	❖
Cognac Suede	D85	●	●
Distressed Autumn Blush	C22	●	
Distressed Baltic	D79	●	
Distressed Cabernet	C87	●	●
Distressed Cannon Grey	D82	●	
Distressed Chestnut	C24		●
Distressed Chocolate	D86	●	●
Distressed Cinnamon	C75	●	●
Distressed Cognac	D84	●	●
Distressed Ginger	C20	●	●
Distressed Hazel	C18	●	●
Distressed Husk	C15	●	●
Distressed Kaffé	C28	●	●
Distressed Molasses	E60	●	●
Distressed Peppercorn	C86	●	●
Distressed Praline	C79	●	●
Distressed Saddle	C14	●	●
Distressed Slate	C73	●	●
Distressed Sunset	D50	●	
Dove White	DW		●
Dove White Suede	D40		●
Dove White W/Cinder Glaze Suede	E30		●
Dove White W/Cocoa Glaze Suede	E31		●
Dove White W/Cinder Glaze	B89		●
Dove White W/Cocoa Glaze	A15		●
Ginger	C88	❖	❖
Ginger Suede	C19	●	●
Ginger W/Sable Glaze Suede	E15	●	●
Ginger W/Sable Glaze	C11	●	●
Greyloft	B65		●
Greyloft Suede	D41		●
Greyloft W/Sable Glaze Suede	E32		●
Greyloft W/Sable Glaze	B66		●
Hazel	C16	❖	
Hazel Suede	C17	●	
Honey Spice	HS	❖	❖
Honey Spice Suede	D88	●	●
Husk	B82	❖	
Husk Suede	C13	●	
Kaffé	KA	❖	❖
Kaffé Suede	C27	●	●
Lagoon	E63		●
Lagoon Suede	E64		●
Linen	D90		●
Linen Suede	D93		●
Linen W/Cinder Glaze Suede	E33		●
Linen W/Cocoa Glaze Suede	E34		●
Linen W/Cinder Glaze	D96		●
Linen W/Cocoa Glaze	D94		●
Midnight	B69		●
Midnight Suede	D42		●
Midnight W/Onyx Glaze Suede	E35		●
Midnight W/Onyx Glaze	B70		●
Molasses	E58	❖	❖
Molasses Suede	E59	●	●
Moonshine	D98		●
Moonshine Suede	E02		●
Moonshine W/Cinder Glaze Suede	E36		●
Moonshine W/Cocoa Glaze Suede	E37		●
Moonshine W/Cinder Glaze	E04		●
Moonshine W/Cocoa Glaze	E03		●
Mushroom	A11		●
Mushroom Suede	D43		●
Mushroom W/Cinder Glaze Suede	E38		●
Mushroom W/Cocoa Glaze Suede	E39		●
Mushroom W/Cinder Glaze	B92		●
Mushroom W/Cocoa Glaze	A12		●
Natural	NA	❖	❖
Natural Suede	D89	●	●
Onyx	A21		●
Onyx Suede	D44		●
Pebble Grey	B83		●
Pebble Grey Suede	D45		●
Pebble Grey W/Cocoa Glaze Suede	E40		●
Pebble Grey W/Cocoa Glaze	B84		●
Peppercorn	PC	❖	❖
Peppercorn Suede	D53	●	●
Praline	PR	❖	❖
Praline Suede	C78	●	●
Praline W/Onyx Glaze Suede	E16		●
Praline W/Onyx Glaze	A45		●
Saddle	B81	❖	❖
Saddle Suede	C12	●	●
Slate	B64	❖	❖
Slate Suede	C72	●	●
Sunset	SU	❖	
Sunset Suede	D49	●	
Surfside	E65		●
Surfside Suede	E66		●
Unfinished	UF	❖	❖
Vintage Biscotti	VS	●	
Vintage Biscotti Suede	E41	●	
Vintage Canvas	VC	●	
Vintage Canvas Suede	E42	●	
Vintage Chai	C35	●	
Vintage Chai Suede	E43	●	
Vintage Dove White	VD	●	
Vintage Dove White Suede	E44	●	
Vintage Greyloft	B67	●	
Vintage Greyloft Suede	E45	●	
Vintage Linen	D91	●	
Vintage Linen Suede	E46	●	
Vintage Midnight	B71	●	
Vintage Midnight Suede	E47	●	
Vintage Moonshine	D99	●	
Vintage Moonshine Suede	E48	●	
Vintage Mushroom	A13	●	
Vintage Mushroom Suede	E49	●	
Vintage Onyx	VO	●	
Vintage Onyx Suede	E50	●	
Vintage Pebble Grey	B86	●	
Vintage Pebble Grey Suede	E51	●	

Lyndale

Scan to view all Lyndale doors

1/2" Overlay

AE8C1	Cherry	Price Column E
AE8D1	EverCore™	Price Column B
AE8H1	Hickory	Price Column B
AE8M1	Maple	Price Column D
AE8O1	Oak	Price Column B
AE8A1	Rustic Alder	Price Column D

Full Overlay

LY1	Cherry	Price Column I
MPD1	EverCore™	Price Column E
AE9H1	Hickory	Price Column E
MP1	Maple	Price Column G
AE9O1	Oak	Price Column E
MPA1	Rustic Alder	Price Column G
AC7C1	Rustic Cherry	Price Column I
AC7M1	Rustic Maple	Price Column G

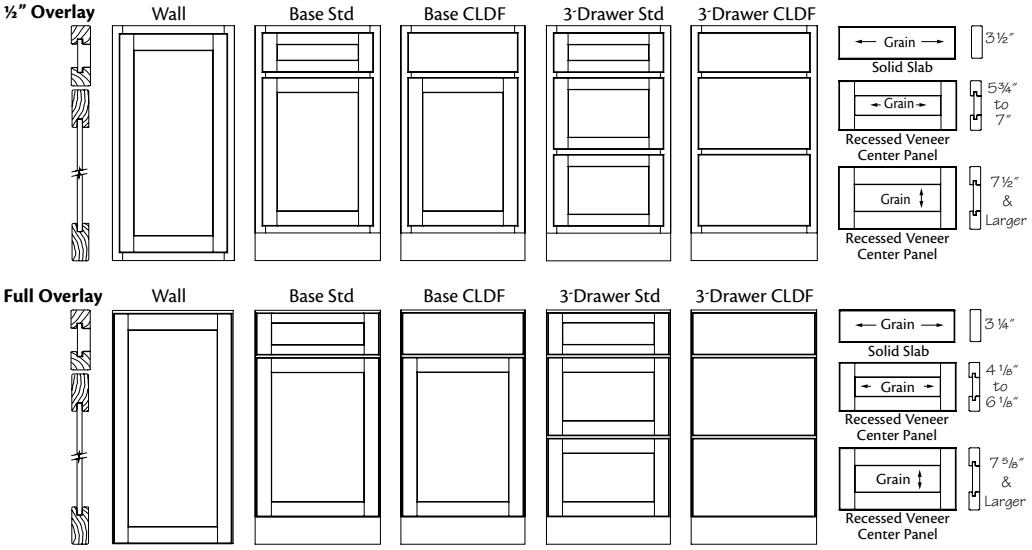

- Solid wood door frame with 2 3/16" stiles and rails, except EverCore™, which will be mechanically compressed wood fiber
- Square veneer recessed panels on wall and base doors, except EverCore™, which will be mechanically compressed wood fiber
- Grain direction does ***not*** apply to EverCore™ doors
- Five-piece drawer front
- Classic Drawer Front (CLDF) option available
- Concealed hinge
- Decorative Hardware is required for full overlay
- Finger Pull Routing (FPR) is available on 1/2" overlay
- Rustic Cherry and Rustic Maple available in full overlay only
- ***Note***: When CLDF option is applied, all drawer fronts will be slab
- ***Note***: Rustic door styles feature knotty or character wood. It contains character marks such as heartwood, worm holes and mineral streaks of varying size. Components of these doors are chosen at random, with the appearance of each individual door varying widely from very rustic to relatively clear and unmarked

Decorative Doors & Inserts Available

Aluminum Frame Glass
- Fresco Brushed Aluminum ■
- Vetro Brushed Aluminum ■

Camed Glass
- Chateau
- Classic Camed Insert ■
- Palisades
- Penrose
- Victorian
- Yorkshire

Classic Glass
- Bistro
- Prepared for Glass
- Prism
- Shadow

Etched Glass
- Crossroads
- Lisbon
- Modern Frosted Insert ■
- Prairie
- Satina

Layered Glass
- Antiquity
- Mirage
- Silk
- Wintersday

Mullion Doors
- Ambry ■ ▲ ★
- Castlegate ■ ▲ ★
- Evansville ■ ▲ ★
- Hewitt ■ ▲ ★
- Palladia ■ ● ★
- Raleigh ■ ● ★
- Showcase Mullion ▲ ★
- Traditional Mullion ▲ ★

Specialty Inserts
- Chalkboard Insert
- Leather Insert

Textured Glass
- Cascade
- Dolace
- Modern Textured Insert ■
- Moire
- Ravenna
- Styx
- Vauxhall

■ Only available in full overlay door styles
▲ Only available in Cherry, Hickory, Maple & Oak door styles
★ ***Not*** available in Rustic door styles
● Only available in Cherry & Maple door styles

Lyndale Finishes

❖ *Available as Standard*
● *Premium Upcharge*

		LY1	AE8C1	MPD1	AE8D1	AE9H1	AE8H1	MP1	AE8M1	AE9O1	AE8O1	AE8A1	MPA1	AC7C1	AC7M1
		Lyndale Cherry - Full	Lyndale Cherry - Half	Lyndale EverCore™ - Full	Lyndale EverCore™ - Half	Lyndale Hickory - Full	Lyndale Hickory - Half	Lyndale Maple - Full	Lyndale Maple - Half	Lyndale Oak - Full	Lyndale Oak - Half	Lyndale Rustic Alder - Half	Lyndale Rustic Alder-Full	Lyndale Rustic Cherry	Lyndale Rustic Maple
Autumn Blush	AB	❖	❖							❖	❖	❖	❖	❖	
Autumn Blush Suede	C21	●	●							●	●	●	●	●	
Autumn Blush W/Onyx Glaze Suede	E10	●	●							●	●	●	●	●	
Autumn Blush W/Onyx Glaze	A56	●	●							●	●	●	●	●	
Baltic	D78	❖	❖							❖	❖	❖	❖	❖	
Baltic Suede	D80	●	●							●	●	●	●	●	
Biscotti	BO			●	●			●	●						
Biscotti Suede	D36			●	●			●	●						
Biscotti W/Cinder Glaze Suede	E24							●	●						
Biscotti W/Cocoa Glaze Suede	E25							●	●						
Biscotti W/Cinder Glaze	B91							●	●						
Biscotti W/Cocoa Glaze	IG							●	●						
Bonsai	E69			●	●			●	●						
Bonsai Suede	E70			●	●			●	●						
Burmese	E67			●	●			●	●						
Burmese Suede	E68			●	●			●	●						
Cabernet	CT	❖	❖					❖	❖			❖	❖	❖	❖
Cabernet Suede	C80	●	●					●	●			●	●	●	●
Cabernet W/Onyx Glaze Suede	E11	●	●									●	●	●	
Cabernet W/Onyx Glaze	A58	●	●									●	●	●	
Cannon Grey	D81	❖	❖							❖	❖	❖	❖	❖	❖
Cannon Grey Suede	D83	●	●							●	●	●	●	●	●
Canvas	CV			●	●			●	●						
Canvas Suede	D37			●	●			●	●						
Canvas W/Cinder Glaze Suede	E26							●	●						
Canvas W/Cocoa Glaze Suede	E27							●	●						
Canvas W/Cinder Glaze	B90							●	●						
Canvas W/Cocoa Glaze	VG							●	●						
Chai	C29			●	●			●	●						
Chai Suede	D39			●	●			●	●						
Chai W/Cinder Glaze Suede	E28							●	●						
Chai W/Cocoa Glaze Suede	E29							●	●						
Chai W/Cinder Glaze	C32							●	●						
Chai W/Cocoa Glaze	C30							●	●						
Chestnut	CN							❖	❖						❖
Chestnut Suede	C23							●	●						●
Chestnut W/Onyx Glaze Suede	E12							●	●						●
Chestnut W/Onyx Glaze	A54							●	●						●
Chocolate	CC	❖	❖					❖	❖			❖	❖	❖	❖
Chocolate Suede	D87	●	●					●	●			●	●	●	●
Chocolate W/Ebony Glaze	EG	●	●									●	●	●	
Chocolate W/Ebony Glaze Suede	E13	●	●									●	●	●	
Cinnamon	CA	❖	❖					❖	❖			❖	❖	❖	❖
Cinnamon Suede	C74	●	●					●	●			●	●	●	●
Cinnamon W/Onyx Glaze Suede	E14	●	●					●	●			●	●	●	●
Cinnamon W/Onyx Glaze	A48	●	●					●	●			●	●	●	●
Cognac	CO	❖	❖			❖	❖	❖	❖	❖	❖	❖	❖	❖	❖
Cognac Suede	D85	●	●			●	●	●	●	●	●	●	●	●	●
Dove White	DW			●	●			●	●						
Dove White Suede	D40			●	●			●	●						
Dove White W/Cinder Glaze Suede	E30							●	●						
Dove White W/Cocoa Glaze Suede	E31							●	●						
Dove White W/Cinder Glaze	B89							●	●						
Dove White W/Cocoa Glaze	A15							●	●						
Fawn	FN									❖	❖				
Fawn Suede	D51									●	●				
Ginger	C88	❖	❖			❖	❖	❖	❖	❖	❖	❖	❖	❖	❖
Ginger Suede	C19	●	●			●	●	●	●	●	●	●	●	●	●
Ginger W/Sable Glaze Suede	E15	●	●			●	●	●	●	●	●	●	●	●	●
Ginger W/Sable Glaze	C11	●	●			●	●	●	●	●	●	●	●	●	●
Greyloft	B65			●	●			●	●						
Greyloft Suede	D41			●	●			●	●						
Greyloft W/Sable Glaze Suede	E32							●	●						
Greyloft W/Sable Glaze	B66							●	●						
Hazel	C16	❖	❖			❖	❖			❖	❖	❖	❖	❖	❖

Continued on next page

Lyndale Finishes continued

		LY1	AE8C1	MPD1	AE8D1	AE9H1	AE8H1	MP1	AE8M1	AE9O1	AE8O1	AE8A1	MPA1	AC7C1	AC7M1
		Lyndale Cherry - Full	Lyndale Cherry - Half	Lyndale EverCore™ - Full	Lyndale EverCore™ - Half	Lyndale Hickory - Full	Lyndale Hickory - Half	Lyndale Maple - Full	Lyndale Maple - Half	Lyndale Oak - Full	Lyndale Oak - Half	Lyndale Rustic Alder - Half	Lyndale Rustic Alder-Full	Lyndale Rustic Cherry	Lyndale Rustic Maple
Hazel Suede	C17	●	●			●	●			●	●	●	●	●	●
Honey Spice	HS	❖	❖			❖	❖	❖	❖	❖	❖	❖	❖	❖	❖
Honey Spice Suede	D88	●	●			●	●	●	●	●	●	●	●	●	●
Husk	B82	❖	❖			❖	❖			❖	❖	❖	❖	❖	❖
Husk Suede	C13	●	●			●	●			●	●	●	●	●	●
Kaffé	KA	❖	❖			❖	❖	❖	❖	❖	❖	❖	❖	❖	❖
Kaffé Suede	C27	●	●			●	●	●	●	●	●	●	●	●	●
Lagoon	E63			●	●			●	●						
Lagoon Suede	E64			●	●			●	●						
Linen	D90			●	●			●	●						
Linen Suede	D93			●	●			●	●						
Linen W/Cinder Glaze Suede	E33							●	●						
Linen W/Cocoa Glaze Suede	E34							●	●						
Linen W/Cinder Glaze	D96							●	●						
Linen W/Cocoa Glaze	D94							●	●						
Midnight	B69			●	●			●	●						
Midnight Suede	D42			●	●			●	●						
Midnight W/Onyx Glaze Suede	E35							●	●						
Midnight W/Onyx Glaze	B70							●	●						
Molasses	E58	❖	❖			❖	❖	❖	❖	❖	❖	❖	❖	❖	❖
Molasses Suede	E59	●	●			●	●	●	●	●	●	●	●	●	●
Moonshine	D98			●	●			●	●						
Moonshine Suede	E02			●	●			●	●						
Moonshine W/Cinder Glaze Suede	E36							●	●						
Moonshine W/Cocoa Glaze Suede	E37							●	●						
Moonshine W/Cinder Glaze	E04							●	●						
Moonshine W/Cocoa Glaze	E03							●	●						
Mushroom	A11			●	●			●	●						
Mushroom Suede	D43			●	●			●	●						
Mushroom W/Cinder Glaze Suede	E38							●	●						
Mushroom W/Cocoa Glaze Suede	E39							●	●						
Mushroom W/Cinder Glaze	B92							●	●						
Mushroom W/Cocoa Glaze	A12							●	●						
Natural	NA	❖	❖			❖	❖	❖	❖	❖	❖	❖	❖	❖	❖
Natural Suede	D89	●	●			●	●	●	●	●	●	●	●	●	●
Onyx	A21			●	●			●	●	●	●				
Onyx Suede	D44			●	●			●	●	●	●				
Pebble Grey	B83			●	●			●	●						
Pebble Grey Suede	D45			●	●			●	●						
Pebble Grey W/Cocoa Glaze Suede	E40							●	●						
Pebble Grey W/Cocoa Glaze	B84							●	●						
Peppercorn	PC	❖	❖					❖	❖	❖	❖	❖	❖	❖	❖
Peppercorn Suede	D53	●	●					●	●	●	●	●	●	●	●
Praline	PR	❖	❖			❖	❖	❖	❖	❖	❖	❖	❖	❖	❖
Praline Suede	C78	●	●			●	●	●	●	●	●	●	●	●	●
Praline W/Onyx Glaze Suede	E16					●	●	●	●						●
Praline W/Onyx Glaze	A45					●	●	●	●						●
Saddle	B81	❖	❖			❖	❖	❖	❖	❖	❖	❖	❖	❖	❖
Saddle Suede	C12	●	●			●	●	●	●	●	●	●	●	●	●
Slate	B64	❖	❖			❖	❖	❖	❖	❖	❖			❖	❖
Slate Suede	C72	●	●			●	●	●	●	●	●			●	●
Sunset	SU	❖	❖			❖	❖					❖	❖	❖	
Sunset Suede	D49	●	●			●	●					●	●	●	
Surfside	E65			●	●			●	●						
Surfside Suede	E66			●	●			●	●						
Unfinished	UF	❖	❖			❖	❖	❖	❖	❖	❖	❖	❖	❖	❖

Notes

Mandolay

Full Overlay

PVB1	Birch	Price Column J
PVC1	Cherry	Price Column M
PVM1	Maple	Price Column K

Scan to view all Mandolay doors

Full Overlay

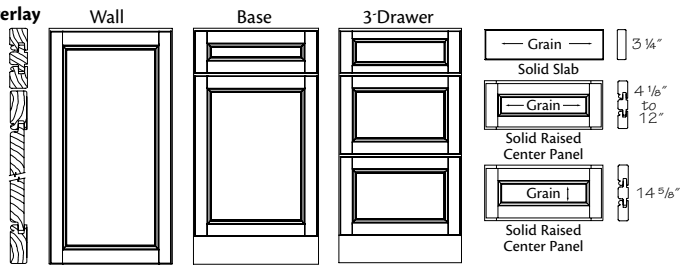

- Solid wood beaded door frame with 2 3/16" stiles and rails
- Square solid raised panel on wall and base doors
- Five-piece raised panel beaded drawer front
- Concealed hinge
- Decorative hardware is required

Decorative Doors & Inserts Available

Aluminum Frame Glass
- Fresco Brushed Aluminum
- Vetro Brushed Aluminum

Camed Glass
- Chateau
- Classic Camed Insert
- Palisades
- Penrose
- Victorian
- Yorkshire

Classic Glass
- Bistro
- Prepared for Glass
- Prism
- Shadow

Etched Glass
- Crossroads
- Lisbon
- Modern Frosted Insert
- Prairie
- Satina

Layered Glass
- Antiquity
- Mirage
- Silk
- Wintersday

Mullion Doors
- Ambry
- Castlegate
- Evansville
- Hewitt
- Palladia ★
- Raleigh ★
- Showcase Mullion
- Traditional Mullion

Specialty Inserts
- Chalkboard Insert
- Leather Insert

Textured Glass
- Cascade
- Dolace
- Modern Textured Insert
- Moire
- Ravenna
- Styx
- Vauxhall

★ ***Not*** available in Birch door styles

Mandolay Finishes

❖ *Available as Standard*
● *Premium Upcharge*

		PVB1 Mandolay Birch	PVC1 Mandolay Cherry	PVM1 Mandolay Maple
Autumn Blush	AB		❖	
Autumn Blush Suede	C21		●	
Autumn Blush W/Onyx Glaze Suede	E10		●	
Autumn Blush W/Onyx Glaze	A56		●	
Baltic	D78		❖	
Baltic Suede	D80		●	
Biscotti W/Cinder Glaze Suede	E24			●
Biscotti W/Cocoa Glaze Suede	E25			●
Biscotti W/Cinder Glaze	B91			●
Biscotti W/Cocoa Glaze	IG			●
Cabernet	CT	❖	❖	❖
Cabernet Suede	C80	●	●	●
Cabernet W/Onyx Glaze Suede	E11		●	
Cabernet W/Onyx Glaze	A58		●	
Cannon Grey	D81		❖	
Cannon Grey Suede	D83		●	
Canvas W/Cinder Glaze Suede	E26			●
Canvas W/Cocoa Glaze Suede	E27			●
Canvas W/Cinder Glaze	B90			●
Canvas W/Cocoa Glaze	VG			●
Chai W/Cinder Glaze Suede	E28			●
Chai W/Cocoa Glaze Suede	E29			●
Chai W/Cinder Glaze	C32			●
Chai W/Cocoa Glaze	C30			●
Chestnut	CN	❖		❖
Chestnut Suede	C23	●		●
Chestnut W/Onyx Glaze Suede	E12			●
Chestnut W/Onyx Glaze	A54			●
Chocolate	CC	❖	❖	❖
Chocolate Suede	D87	●	●	●
Chocolate W/Ebony Glaze	EG		●	
Chocolate W/Ebony Glaze Suede	E13		●	
Cinnamon	CA	❖	❖	❖
Cinnamon Suede	C74	●	●	●
Cinnamon W/Onyx Glaze Suede	E14		●	●
Cinnamon W/Onyx Glaze	A48		●	●
Cognac	CO	❖	❖	❖
Cognac Suede	D85	●	●	●
Dove White W/Cinder Glaze Suede	E30			●
Dove White W/Cocoa Glaze Suede	E31			●
Dove White W/Cinder Glaze	B89			●
Dove White W/Cocoa Glaze	A15			●
Ginger	C88	❖	❖	❖
Ginger Suede	C19	●	●	●
Ginger W/Sable Glaze Suede	E15	●	●	●
Ginger W/Sable Glaze	C11	●	●	●
Greyloft W/Sable Glaze Suede	E32			●
Greyloft W/Sable Glaze	B66			●
Hazel	C16	❖	❖	
Hazel Suede	C17	●	●	
Honey Spice	HS	❖	❖	❖
Honey Spice Suede	D88	●	●	●
Husk	B82	❖	❖	
Husk Suede	C13	●	●	
Kaffé	KA	❖	❖	❖
Kaffé Suede	C27	●	●	●
Linen W/Cinder Glaze Suede	E33			●
Linen W/Cocoa Glaze Suede	E34			●
Linen W/Cinder Glaze	D96			●
Linen W/Cocoa Glaze	D94			●
Midnight W/Onyx Glaze Suede	E35			●
Midnight W/Onyx Glaze	B70			●
Molasses	E58	❖	❖	❖
Molasses Suede	E59	●	●	●
Moonshine W/Cinder Glaze Suede	E36			●
Moonshine W/Cocoa Glaze Suede	E37			●
Moonshine W/Cinder Glaze	E04			●
Moonshine W/Cocoa Glaze	E03			●
Mushroom W/Cinder Glaze Suede	E38			●
Mushroom W/Cocoa Glaze Suede	E39			●
Mushroom W/Cinder Glaze	B92			●
Mushroom W/Cocoa Glaze	A12			●
Natural	NA	❖	❖	❖
Natural Suede	D89	●	●	●
Pebble Grey W/Cocoa Glaze Suede	E40			●
Pebble Grey W/Cocoa Glaze	B84			●
Peppercorn	PC		❖	❖
Peppercorn Suede	D53		●	●
Praline	PR	❖	❖	❖
Praline Suede	C78	●	●	●
Praline W/Onyx Glaze Suede	E16			●
Praline W/Onyx Glaze	A45			●
Saddle	B81	❖	❖	❖
Saddle Suede	C12	●	●	●
Slate	B64	❖	❖	❖
Slate Suede	C72	●	●	●
Sunset	SU		❖	
Sunset Suede	D49		●	
Unfinished	UF	❖	❖	❖

Marquette

Scan to view all Marquette doors

1/2" Overlay

TWAC1	Cherry Roman	Price Column I
TWSC1	Cherry Square	Price Column I
TWAD1	EverCore™ Roman	Price Column F
TWSD1	EverCore™ Square	Price Column F
TWAH1	Hickory Roman	Price Column F
TWSH1	Hickory Square	Price Column F
TWAM1	Maple Roman	Price Column G
TWSM1	Maple Square	Price Column G
TWAO1	Oak Roman	Price Column F
TWSO1	Oak Square	Price Column F
TWSA1	Rustic Alder Square	Price Column G

Full Overlay

PWC1	Cherry Roman	Price Column L
MTC1	Cherry Square	Price Column L
PWD1	EverCore™ Roman	Price Column H
MTD1	EverCore™ Square	Price Column H
PWH1	Hickory Roman	Price Column H
MTH1	Hickory Square	Price Column H
PWM1	Maple Roman	Price Column I
MTM1	Maple Square	Price Column I
PWO1	Oak Roman	Price Column H
MTO1	Oak Square	Price Column H
MTA1	Rustic Alder Square	Price Column I

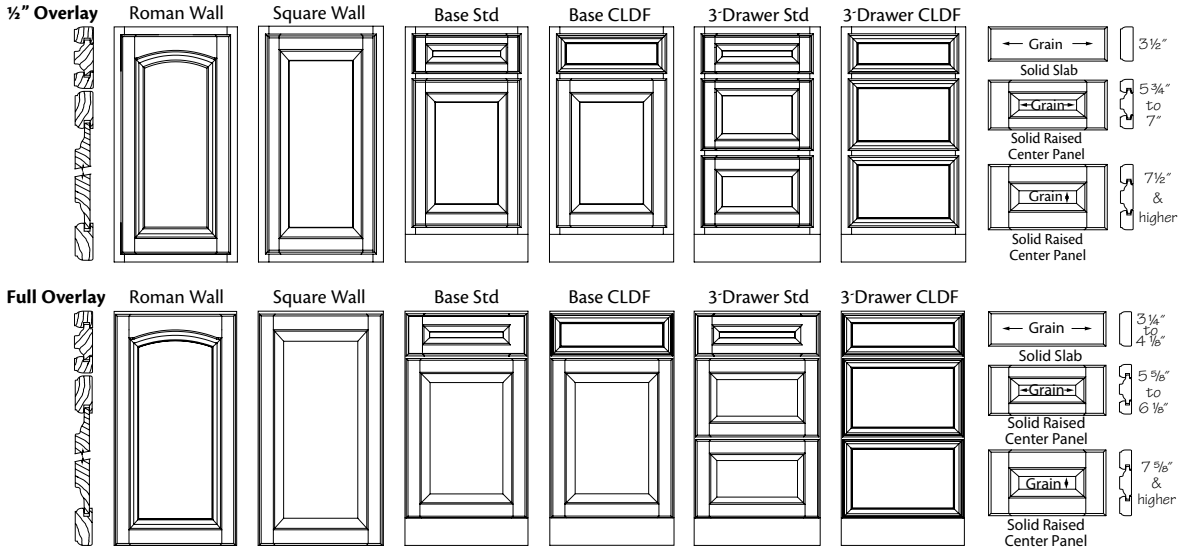

- Solid wood door frame with 2 3/16" stiles and rails, except EverCore™, which will be mechanically compressed wood fiber
- Square design has solid raised panels on wall and base doors, except EverCore™, which will be mechanically compressed wood fiber
- Roman design has arched solid raised panels on wall doors only, except EverCore™, which will be mechanically compressed wood fiber; base doors will be square,
- Grain direction does ***not*** apply to EverCore™ doors
- Drawer front varies depending on height
- Classic Drawer Front (CLDF) option available
- Concealed hinge
- Decorative Hardware is required for full overlay
- ***Note***: When CLDF option is applied, all drawer fronts will be slab
- ***Note***: Rustic door styles feature knotty or character wood. It contains character marks such as heartwood, worm holes and mineral streaks of varying size. Components of these doors are chosen at random, with the appearance of each individual door varying widely from very rustic to relatively clear and unmarked

Decorative Doors & Inserts Available

Aluminum Frame Glass
- Fresco Brushed Aluminum ■
- Vetro Brushed Aluminum ■

Camed Glass
- Chateau
- Classic Camed Insert ■
- Palisades
- Penrose
- Victorian
- Yorkshire

Classic Glass
- Bistro
- Prepared for Glass
- Prism ●
- Shadow

Etched Glass
- Crossroads
- Lisbon
- Modern Frosted Insert ■ ●
- Prairie
- Satina

Layered Glass
- Antiquity
- Mirage
- Silk
- Wintersday

Mullion Doors
- Castlegate ■ ★
- Evansville ■ ★
- Hewitt ■ ★
- Palladia ■ ▲
- Raleigh ■ ▲
- Showcase Mullion ★
- Traditional Mullion ★

Specialty Inserts
- Chalkboard Insert
- Leather Insert

Textured Glass
- Cascade
- Dolace
- Modern Textured Insert ■
- Moire
- Ravenna
- Styx
- Vauxhall

■ Only available in full overlay door styles
● ***Not*** available in Arch door styles
▲ Only available in Cherry & Maple door styles
★ ***Not*** available in EverCore™ or Rustic door styles

Marquette Finishes

❖ *Available as Standard*
● *Premium Upcharge*

		PWC1	TWAC1	MTC1	TWSC1	PWD1	TWAD1	MTD1	TWSD1	PWH1	TWAH1	MTH1	TWSH1	PWM1	TWAM1	MTM1	TWSM1	PWO1	TWAO1	MTO1	TWSO1	MTA1	TWSA1
		Marquette Cherry Roman-Full	Marquette Cherry Roman-Half	Marquette Cherry Square-Full	Marquette Cherry Square-Half	Marquette EverCore™ Roman - Full	Marquette EverCore™ Roman - Half	Marquette EverCore™ Square - Full	Marquette EverCore™ Square - Half	Marquette Hickory Roman-Full	Marquette Hickory Roman-Half	Marquette Hickory Square-Full	Marquette Hickory Square-Half	Marquette Maple Roman-Full	Marquette Maple Roman-Half	Marquette Maple Square-Full	Marquette Maple Square-Half	Marquette Oak Roman-Full	Marquette Oak Roman-Half	Marquette Oak Square-Full	Marquette Oak Square-Half	Marquette Rustic Alder Square-Full	Marquette Rustic Alder Square-Half
Aged Concrete	E06													●	●	●	●						
Aged Papyrus	E05													●	●	●	●						
Aged River Rock	E07													●	●	●	●						
Autumn Blush	AB	❖	❖	❖	❖													❖	❖	❖	❖	❖	❖
Autumn Blush Suede	C21	●	●	●	●													●	●	●	●	●	●
Autumn Blush W/Onyx Glaze Suede	E10	●	●	●	●													●	●	●	●	●	●
Autumn Blush W/Onyx Glaze	A56	●	●	●	●													●	●	●	●	●	●
Baltic	D78	❖	❖	❖	❖													❖	❖	❖	❖	❖	❖
Baltic Suede	D80	●	●	●	●													●	●	●	●	●	●
Biscotti	BO					●	●	●	●					●	●	●	●						
Biscotti Suede	D36					●	●	●	●					●	●	●	●						
Biscotti W/Cinder Glaze Suede	E24													●	●	●	●						
Biscotti W/Cocoa Glaze Suede	E25													●	●	●	●						
Biscotti W/Cinder Glaze	B91													●	●	●	●						
Biscotti W/Cocoa Glaze	IG													●	●	●	●						
Bonsai	E69					●	●	●	●					●	●	●	●						
Bonsai Suede	E70					●	●	●	●					●	●	●	●						
Burmese	E67					●	●	●	●					●	●	●	●						
Burmese Suede	E68					●	●	●	●					●	●	●	●						
Burnished Autumn Blush	BA	●		●																		●	
Burnished Autumn Blush Suede	E17	●		●																		●	
Burnished Cabernet	BT	●		●																		●	
Burnished Cabernet Suede	E18	●		●																		●	
Burnished Chestnut	BH													●		●							
Burnished Chestnut Suede	E19													●		●							
Burnished Chocolate	BL	●		●																		●	
Burnished Chocolate Suede	E20	●		●																		●	
Burnished Cinnamon	A51	●		●										●		●						●	
Burnished Cinnamon Suede	E21	●		●										●		●						●	
Burnished Ginger	BE	●		●										●		●						●	
Burnished Ginger Suede	E22	●		●										●		●						●	
Burnished Praline	BP									●		●		●		●						●	
Burnished Praline Suede	E23									●		●		●		●						●	
Cabernet	CT	❖	❖	❖	❖									❖	❖	❖	❖					❖	❖
Cabernet Suede	C80	●	●	●	●									●	●	●	●					●	●
Cabernet W/Onyx Glaze Suede	E11	●	●	●	●																	●	●
Cabernet W/Onyx Glaze	A58	●	●	●	●																	●	●
Cannon Grey	D81	❖	❖	❖	❖													❖	❖	❖	❖	❖	❖
Cannon Grey Suede	D83	●	●	●	●													●	●	●	●	●	●
Canvas	CV					●	●	●	●					●	●	●	●						
Canvas Suede	D37					●	●	●	●					●	●	●	●						
Canvas W/Cinder Glaze Suede	E26													●	●	●	●						
Canvas W/Cocoa Glaze Suede	E27													●	●	●	●						
Canvas W/Cinder Glaze	B90													●	●	●	●						
Canvas W/Cocoa Glaze	VG													●	●	●	●						
Chai	C29					●	●	●	●					●	●	●	●						
Chai Suede	D39					●	●	●	●					●	●	●	●						
Chai W/Cinder Glaze Suede	E28													●	●	●	●						
Chai W/Cocoa Glaze Suede	E29													●	●	●	●						
Chai W/Cinder Glaze	C32													●	●	●	●						
Chai W/Cocoa Glaze	C30													●	●	●	●						
Chestnut	CN													❖	❖	❖	❖						
Chestnut Suede	C23													●	●	●	●						
Chestnut W/Onyx Glaze Suede	E12													●	●	●	●						
Chestnut W/Onyx Glaze	A54													●	●	●	●						
Chocolate	CC	❖	❖	❖	❖									❖	❖	❖	❖					❖	❖
Chocolate Suede	D87	●	●	●	●									●	●	●	●					●	●

Continued on next page

Marquette Finishes continued

❖ *Available as Standard*
● *Premium Upcharge*

		PWC1	TWAC1	MTC1	TWSC1	PWD1	TWAD1	MTD1	TWSD1	PWH1	TWAH1	MTH1	TWSH1	PWM1	TWAM1	MTM1	TWSM1	PWO1	TWAO1	MTO1	TWSO1	MTA1	TWSA1
		Marquette Cherry Roman-Full	Marquette Cherry Roman-Half	Marquette Cherry Square-Full	Marquette Cherry Square-Half	Marquette EverCore™ Roman - Full	Marquette EverCore™ Roman - Half	Marquette EverCore™ Square - Full	Marquette EverCore™ Square - Half	Marquette Hickory Roman-Full	Marquette Hickory Roman-Half	Marquette Hickory Square-Full	Marquette Hickory Square-Half	Marquette Maple Roman-Full	Marquette Maple Roman-Half	Marquette Maple Square-Full	Marquette Maple Square-Half	Marquette Oak Roman-Full	Marquette Oak Roman-Half	Marquette Oak Square-Full	Marquette Oak Square-Half	Marquette Rustic Alder Square-Full	Marquette Rustic Alder Square-Half
Chocolate W/Ebony Glaze	EG	●	●	●	●																	●	●
Chocolate W/Ebony Glaze Suede	E13	●	●	●	●																	●	●
Cinnamon	CA	❖	❖	❖	❖									❖	❖	❖	❖					❖	❖
Cinnamon Suede	C74	●	●	●	●									●	●	●	●					●	●
Cinnamon W/Onyx Glaze Suede	E14	●	●	●	●									●	●	●	●					●	●
Cinnamon W/Onyx Glaze	A48	●	●	●	●									●	●	●	●					●	●
Cognac	CO	❖	❖	❖	❖					❖	❖	❖	❖	❖	❖	❖	❖	❖	❖	❖	❖	❖	❖
Cognac Suede	D85	●	●	●	●					●	●	●	●	●	●	●	●	●	●	●	●	●	●
Distressed Autumn Blush	C22	●		●														●		●		●	
Distressed Baltic	D79	●		●														●		●		●	
Distressed Cabernet	C87	●		●										●		●						●	
Distressed Cannon Grey	D82	●		●														●		●		●	
Distressed Chestnut	C24													●		●							
Distressed Chocolate	D86	●		●										●		●						●	
Distressed Cinnamon	C75	●		●										●		●						●	
Distressed Cognac	D84	●		●						●		●		●		●		●		●		●	
Distressed Fawn	D52																	●		●			
Distressed Ginger	C20	●		●						●		●		●		●		●		●		●	
Distressed Hazel	C18	●		●						●		●		●		●		●		●		●	
Distressed Husk	C15	●		●						●		●		●		●		●		●		●	
Distressed Kaffé	C28	●		●						●		●		●		●		●		●		●	
Distressed Molasses	E60	●		●						●		●		●		●		●		●		●	
Distressed Peppercorn	C86	●		●										●		●		●		●		●	
Distressed Praline	C79	●		●						●		●		●		●		●		●		●	
Distressed Saddle	C14	●		●						●		●		●		●		●		●		●	
Distressed Slate	C73	●		●						●		●		●		●		●		●			
Distressed Sunset	D50	●		●						●		●										●	
Dove White	DW					●	●	●	●					●	●	●	●						
Dove White Suede	D40					●	●	●	●					●	●	●	●						
Dove White W/Cinder Glaze Suede	E30													●	●	●	●						
Dove White W/Cocoa Glaze Suede	E31													●	●	●	●						
Dove White W/Cinder Glaze	B89													●	●	●	●						
Dove White W/Cocoa Glaze	A15													●	●	●	●						
Fawn	FN																	❖	❖	❖	❖		
Fawn Suede	D51																	●	●	●	●		
Ginger	C88	❖	❖	❖	❖					❖	❖	❖	❖	❖	❖	❖	❖	❖	❖	❖	❖	❖	❖
Ginger Suede	C19	●	●	●	●					●	●	●	●	●	●	●	●	●	●	●	●	●	●
Ginger W/Sable Glaze Suede	E15	●	●	●	●					●	●	●	●	●	●	●	●	●	●	●	●	●	●
Ginger W/Sable Glaze	C11	●	●	●	●					●	●	●	●	●	●	●	●	●	●	●	●	●	●
Greyloft	B65					●	●	●	●					●	●	●	●						
Greyloft Suede	D41					●	●	●	●					●	●	●	●						
Greyloft W/Sable Glaze Suede	E32													●	●	●	●						
Greyloft W/Sable Glaze	B66													●	●	●	●						
Hazel	C16	❖	❖	❖	❖					❖	❖	❖	❖					❖	❖	❖	❖	❖	❖
Hazel Suede	C17	●	●	●	●					●	●	●	●					●	●	●	●	●	●
Honey Spice	HS	❖	❖	❖	❖					❖	❖	❖	❖	❖	❖	❖	❖	❖	❖	❖	❖	❖	❖
Honey Spice Suede	D88	●	●	●	●					●	●	●	●	●	●	●	●	●	●	●	●	●	●
Husk	B82	❖	❖	❖	❖					❖	❖	❖	❖					❖	❖	❖	❖	❖	❖
Husk Suede	C13	●	●	●	●					●	●	●	●					●	●	●	●	●	●
Kaffé	KA	❖	❖	❖	❖					❖	❖	❖	❖	❖	❖	❖	❖	❖	❖	❖	❖	❖	❖
Kaffé Suede	C27	●	●	●	●					●	●	●	●	●	●	●	●	●	●	●	●	●	●
Lagoon	E63					●	●	●	●					●	●	●	●						
Lagoon Suede	E64					●	●	●	●					●	●	●	●						
Linen	D90					●	●	●	●					●	●	●	●						
Linen Suede	D93					●	●	●	●					●	●	●	●						
Linen W/Cinder Glaze Suede	E33													●	●	●	●						
Linen W/Cocoa Glaze Suede	E34													●	●	●	●						

Continued on next page

Marquette Finishes continued

❖ *Available as Standard*
● *Premium Upcharge*

		PWC1	TWAC1	MTC1	TWSC1	PWD1	TWAD1	MTD1	TWSD1	PWH1	TWAH1	MTH1	TWSH1	PWM1	TWAM1	MTM1	TWSM1	PWO1	TWAO1	MTO1	TWSO1	MTA1	TWSA1
		Marquette Cherry Roman-Full	Marquette Cherry Roman-Half	Marquette Cherry Square-Full	Marquette Cherry Square-Half	Marquette EverCore™ Roman - Full	Marquette EverCore™ Roman - Half	Marquette EverCore™ Square - Full	Marquette EverCore™ Square - Half	Marquette Hickory Roman-Full	Marquette Hickory Roman-Half	Marquette Hickory Square-Full	Marquette Hickory Square-Half	Marquette Maple Roman-Full	Marquette Maple Roman-Half	Marquette Maple Square-Full	Marquette Maple Square-Half	Marquette Oak Roman-Full	Marquette Oak Roman-Half	Marquette Oak Square-Full	Marquette Oak Square-Half	Marquette Rustic Alder Square-Full	Marquette Rustic Alder Square-Half
Linen W/Cinder Glaze	D96													●	●	●	●						
Linen W/Cocoa Glaze	D94													●	●	●	●						
Midnight	B69					●	●	●	●					●	●	●	●						
Midnight Suede	D42					●	●	●	●					●	●	●	●						
Midnight W/Onyx Glaze Suede	E35													●	●	●	●						
Midnight W/Onyx Glaze	B70													●	●	●	●						
Molasses	E58	❖	❖	❖	❖					❖	❖	❖	❖	❖	❖	❖	❖	❖	❖	❖	❖	❖	❖
Molasses Suede	E59	●	●	●	●					●	●	●	●	●	●	●	●	●	●	●	●	●	●
Moonshine	D98					●	●	●	●					●	●	●	●						
Moonshine Suede	E02					●	●	●	●					●	●	●	●						
Moonshine W/Cinder Glaze Suede	E36													●	●	●	●						
Moonshine W/Cocoa Glaze Suede	E37													●	●	●	●						
Moonshine W/Cinder Glaze	E04													●	●	●	●						
Moonshine W/Cocoa Glaze	E03													●	●	●	●						
Mushroom	A11					●	●	●	●					●	●	●	●						
Mushroom Suede	D43					●	●	●	●					●	●	●	●						
Mushroom W/Cinder Glaze Suede	E38													●	●	●	●						
Mushroom W/Cocoa Glaze Suede	E39													●	●	●	●						
Mushroom W/Cinder Glaze	B92													●	●	●	●						
Mushroom W/Cocoa Glaze	A12													●	●	●	●						
Natural	NA	❖	❖	❖	❖					❖	❖	❖	❖	❖	❖	❖	❖	❖	❖	❖	❖	❖	❖
Natural Suede	D89	●	●	●	●					●	●	●	●	●	●	●	●	●	●	●	●	●	●
Onyx	A21					●	●	●	●					●	●	●	●	●	●	●	●		
Onyx Suede	D44					●	●	●	●					●	●	●	●	●	●	●	●		
Pebble Grey	B83					●	●	●	●					●	●	●	●						
Pebble Grey Suede	D45					●	●	●	●					●	●	●	●						
Pebble Grey W/Cocoa Glaze Suede	E40													●	●	●	●						
Pebble Grey W/Cocoa Glaze	B84													●	●	●	●						
Peppercorn	PC	❖	❖	❖	❖									❖	❖	❖	❖	❖	❖	❖	❖	❖	❖
Peppercorn Suede	D53	●	●	●	●									●	●	●	●	●	●	●	●	●	●
Praline	PR	❖	❖	❖	❖					❖	❖	❖	❖	❖	❖	❖	❖	❖	❖	❖	❖	❖	❖
Praline Suede	C78	●	●	●	●					●	●	●	●	●	●	●	●	●	●	●	●	●	●
Praline W/Onyx Glaze Suede	E16									●	●	●	●	●	●	●	●						
Praline W/Onyx Glaze	A45									●	●	●	●	●	●	●	●						
Saddle	B81	❖	❖	❖	❖					❖	❖	❖	❖	❖	❖	❖	❖	❖	❖	❖	❖	❖	❖
Saddle Suede	C12	●	●	●	●					●	●	●	●	●	●	●	●	●	●	●	●	●	●
Slate	B64	❖	❖	❖	❖					❖	❖	❖	❖	❖	❖	❖	❖	❖	❖	❖	❖		
Slate Suede	C72	●	●	●	●					●	●	●	●	●	●	●	●	●	●	●	●		
Sunset	SU	❖	❖	❖	❖					❖	❖	❖	❖									❖	❖
Sunset Suede	D49	●	●	●	●					●	●	●	●									●	●
Surfside	E65					●	●	●	●					●	●	●	●						
Surfside Suede	E66					●	●	●	●					●	●	●	●						
Unfinished	UF	❖	❖	❖	❖					❖	❖	❖	❖	❖	❖	❖	❖	❖	❖	❖	❖	❖	❖
Vintage Biscotti	VS	●		●																			
Vintage Biscotti Suede	E41	●		●																			
Vintage Canvas	VC	●		●																			
Vintage Canvas Suede	E42	●		●																			
Vintage Chai	C35	●		●																			
Vintage Chai Suede	E43	●		●																			
Vintage Dove White	VD	●		●																			
Vintage Dove White Suede	E44	●		●																			
Vintage Greyloft	B67	●		●																			
Vintage Greyloft Suede	E45	●		●																			
Vintage Linen	D91	●		●																			
Vintage Linen Suede	E46	●		●																			
Vintage Midnight	B71	●		●																			
Vintage Midnight Suede	E47	●		●																			
Vintage Moonshine	D99	●		●																			

Continued on next page

Marquette Finishes continued

❖ *Available as Standard*
● *Premium Upcharge*

		Marquette Cherry Roman-Full PWC1	Marquette Cherry Roman-Half TWAC1	Marquette Cherry Square-Full MTC1	Marquette Cherry Square-Half TWSC1	Marquette EverCore™ Roman - Full PWD1	Marquette EverCore™ Roman - Half TWAD1	Marquette EverCore™ Square - Full MTD1	Marquette EverCore™ Square - Half TWSD1	Marquette Hickory Roman-Full PWH1	Marquette Hickory Roman-Half TWAH1	Marquette Hickory Square-Full MTH1	Marquette Hickory Square-Half TWSH1	Marquette Maple Roman-Full PWM1	Marquette Maple Roman-Half TWAM1	Marquette Maple Square-Full MTM1	Marquette Maple Square-Half TWSM1	Marquette Oak Roman-Full PWO1	Marquette Oak Roman-Half TWAO1	Marquette Oak Square-Full MTO1	Marquette Oak Square-Half TWSO1	Marquette Rustic Alder Square-Full MTA1	Marquette Rustic Alder Square-Half TWSA1
Vintage Moonshine Suede	E48	●		●																			
Vintage Mushroom	A13	●		●																			
Vintage Mushroom Suede	E49	●		●																			
Vintage Onyx	VO	●		●																			
Vintage Onyx Suede	E50	●		●																			
Vintage Pebble Grey	B86	●		●																			
Vintage Pebble Grey Suede	E51	●		●																			

Maxton

Full Overlay

AG7L1 High-Gloss Foil Price Column G

Scan to view all Maxton doors

Full Overlay

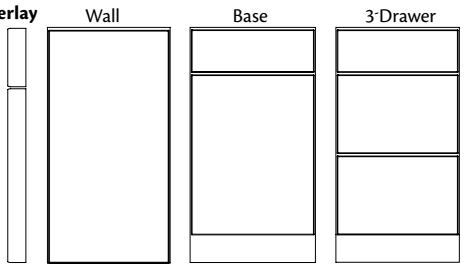

- Thermofoil on 3/4" thick MDF substrate
- Slab with square edges on wall & base doors
- Door edges are banded with matching high-gloss material
- Door backs have a corresponding color in a matte finish
- Slab drawer front
- Concealed hinge
- Decorative hardware is required
- ***Note***: The cabinet interior, exterior and face frame supplied in coordinating matte sheen finish as standard
- ***Note***: Accessories, except those available in high-gloss, will also have a coordinating matte sheen finish

We recommend ordering Specialty Panels (SPL), Filler Overlays (BFOL, DFOL, TFOL, VFOL, WFOL), Small Universal Molding (SUM8) and Large Universal Molding (LUM8) for a finished, high gloss look

Decorative Doors & Inserts Available

Aluminum Frame Glass

- Fresco Brushed Aluminum
- Vetro Brushed Aluminum

Maxton FInishes

❖ *Available as Standard*
● *Premium Upcharge*

		Maxton	AG7L1
Chai High-Gloss	D57	❖	
Dove White High-Gloss	D58	❖	
Greyloft High-Gloss	D59	❖	
Onyx High-Gloss	D60	❖	
Pebble Grey High-Gloss	D61	❖	

Melrose

Full Overlay

MRO1 Quartersawn Oak Price Column J

Scan to view all Melrose doors

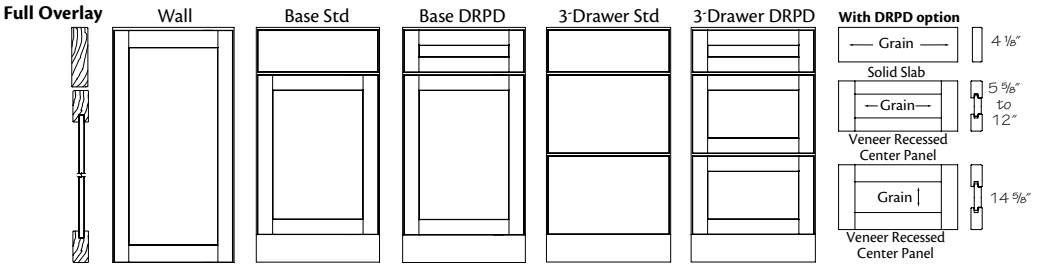

- Solid wood door frame with 2 1/4" stiles and rails
- Square quartersawn Oak veneer recessed center panel
- Solid quartersawn Oak slab drawer fronts
- Deluxe Recessed Panel Drawer (DRPD) front available
- Concealed hinge
- Decorative hardware is required

Decorative Doors & Inserts Available

Aluminum Frame Glass
- Fresco Brushed Aluminum
- Vetro Brushed Aluminum

Camed Glass
- Chateau
- Classic Camed Insert
- Palisades
- Penrose
- Victorian
- Yorkshire

Classic Glass
- Bistro
- Prepared for Glass
- Prism
- Shadow

Etched Glass
- Crossroads
- Lisbon
- Modern Frosted Insert
- Prairie
- Satina

Layered Glass
- Antiquity
- Mirage
- Silk
- Wintersday

Mullion Doors
- Ambry
- Castlegate
- Evansville
- Hewitt
- Showcase Mullion
- Traditional Mullion

Specialty Inserts
- Chalkboard Insert
- Leather Insert

Textured Glass
- Cascade
- Dolace
- Modern Textured Insert
- Moire
- Ravenna
- Styx
- Vauxhall

Melrose Finishes

❖ *Available as Standard*
● *Premium Upcharge*

		Melrose	MRO1
Autumn Blush	AB	❖	
Autumn Blush Suede	C21	●	
Autumn Blush W/Onyx Glaze Suede	E10	●	
Autumn Blush W/Onyx Glaze	A56	●	
Baltic	D78	❖	
Baltic Suede	D80	●	
Cannon Grey	D81	❖	
Cannon Grey Suede	D83	●	
Cognac	CO	❖	
Cognac Suede	D85	●	
Fawn	FN	❖	
Fawn Suede	D51	●	
Ginger	C88	❖	
Ginger Suede	C19	●	
Ginger W/Sable Glaze Suede	E15	●	
Ginger W/Sable Glaze	C11	●	
Hazel	C16	❖	
Hazel Suede	C17	●	
Honey Spice	HS	❖	
Honey Spice Suede	D88	●	
Husk	B82	❖	
Husk Suede	C13	●	
Kaffé	KA	❖	
Kaffé Suede	C27	●	
Molasses	E58	❖	
Molasses Suede	E59	●	
Natural	NA	❖	
Natural Suede	D89	●	
Onyx	A21	●	
Onyx Suede	D44	●	
Peppercorn	PC	❖	
Peppercorn Suede	D53	●	
Praline	PR	❖	
Praline Suede	C78	●	
Saddle	B81	❖	
Saddle Suede	C12	●	
Slate	B64	❖	
Slate Suede	C72	●	
Unfinished	UF	❖	

Morristown

Full Overlay

SU1 Quartersawn Oak Price Column L

Scan to view all Morristown doors

Full Overlay

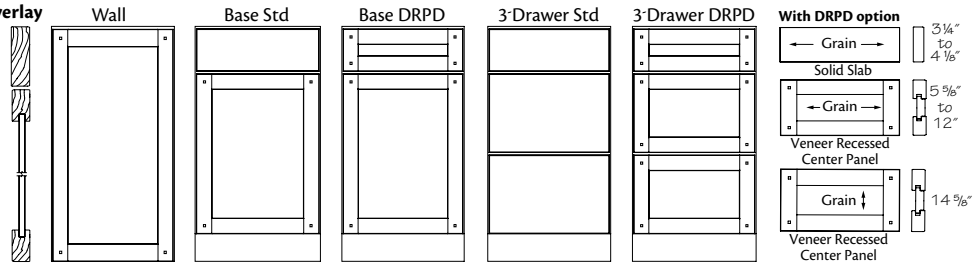

- Solid wood door frame with oak pegs in 2 1/4" stiles and rails
- Square quartersawn Oak veneer recessed center panel
- Solid quartersawn Oak slab drawer fronts
- Deluxe Recessed Panel Drawer (DRPD) front available
- Concealed hinge
- Decorative hardware is required
- When Deluxe Raised Panel Drawer (DRPD) option is applied, five-piece recessed drawer fronts have oak pegs
- When drawer fronts are supplied as solid slab, they will ***not*** have corner pegs

Decorative Doors & Inserts Available

Aluminum Frame Glass
- Fresco Brushed Aluminum
- Vetro Brushed Aluminum

Camed Glass
- Chateau
- Classic Camed Insert
- Palisades
- Penrose
- Victorian
- Yorkshire

Classic Glass
- Bistro
- Prepared for Glass
- Prism
- Shadow

Etched Glass
- Crossroads
- Lisbon
- Modern Frosted Insert
- Prairie
- Satina

Layered Glass
- Antiquity
- Mirage
- Silk
- Wintersday

Mullion Doors
- Ambry
- Castlegate
- Evansville
- Hewitt
- Showcase Mullion
- Traditional Mullion

Specialty Inserts
- Chalkboard Insert
- Leather Insert

Textured Glass
- Cascade
- Dolace
- Modern Textured Insert
- Moire
- Ravenna
- Styx
- Vauxhall

Morristown Finishes

❖ *Available as Standard*
● *Premium Upcharge*

		SU1
		Morristown
Autumn Blush	AB	❖
Autumn Blush Suede	C21	●
Autumn Blush W/Onyx Glaze Suede	E10	●
Autumn Blush W/Onyx Glaze	A56	●
Baltic	D78	❖
Baltic Suede	D80	●
Cannon Grey	D81	❖
Cannon Grey Suede	D83	●
Cognac	CO	❖
Cognac Suede	D85	●
Fawn	FN	❖
Fawn Suede	D51	●
Ginger	C88	❖
Ginger Suede	C19	●
Ginger W/Sable Glaze Suede	E15	●
Ginger W/Sable Glaze	C11	●
Hazel	C16	❖
Hazel Suede	C17	●
Honey Spice	HS	❖
Honey Spice Suede	D88	●
Husk	B82	❖
Husk Suede	C13	●
Kaffé	KA	❖
Kaffé Suede	C27	●
Molasses	E58	❖
Molasses Suede	E59	●
Natural	NA	❖
Natural Suede	D89	●
Onyx	A21	●
Onyx Suede	D44	●
Peppercorn	PC	❖
Peppercorn Suede	D53	●
Praline	PR	❖
Praline Suede	C78	●
Saddle	B81	❖
Saddle Suede	C12	●
Slate	B64	❖
Slate Suede	C72	●
Unfinished	UF	❖

Northbrook

Full Overlay

WP1 White Thermofoil Price Column E

Scan to view all Northbrook doors

Full Overlay

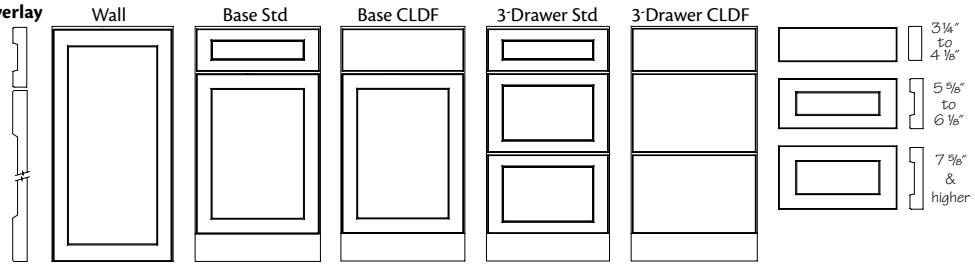

- Thermofoil on 3/4" thick MDF substrate
- Square recessed center panel on wall and base doors
- Drawer front varies depending on height
- Classic Drawer Front (CLDF) option available
- Concealed hinge
- Decorative hardware is required
- ***Note***: When CLDF option is applied, all drawer fronts will be slab

Remember, all Foil and Thermofoil door styles will have a natural birch interior and a white or cream Viraguard exterior. Also, the underside of the cabinets are natural birch. To cover the underside, order an Under Cabinet Panel.

Decorative Doors & Inserts Available

Aluminum Frame Glass
- Fresco Brushed Aluminum
- Vetro Brushed Aluminum

Camed Glass
- Chateau
- Classic Camed Insert
- Palisades
- Penrose
- Victorian
- Yorkshire

Classic Glass
- Bistro
- Prepared for Glass
- Prism
- Shadow

Etched Glass
- Crossroads
- Lisbon
- Modern Frosted Insert
- Prairie
- Satina

Layered Glass
- Antiquity
- Mirage
- Silk
- Wintersday

Mullion Doors
- Traditional Mullion

Specialty Inserts
- Chalkboard Insert
- Leather Insert

Textured Glass
- Cascade
- Dolace
- Modern Textured Insert
- Moire
- Ravenna
- Styx
- Vauxhall

Northbrook Finishes

❖ *Available as Standard*
● *Premium Upcharge*

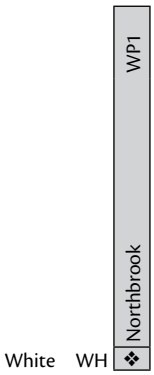

Parker House

Full Overlay

PDC1	Cherry	Price Column N
PDM1	Maple	Price Column L

Scan to view all Parker House doors

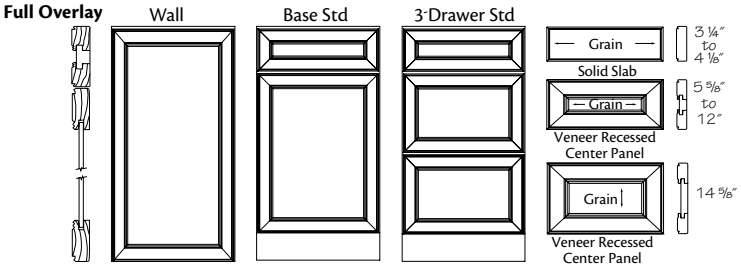

- Solid wood mitered beaded door frame with 2 3/16" stiles and rails
- Square veneer recessed panel on wall and base doors
- Five-piece beaded drawer front
- Drawer front varies depending on height
- Concealed hinge
- Decorative hardware is required

Decorative Doors & Inserts Available

Aluminum Frame Glass
- Fresco Brushed Aluminum
- Vetro Brushed Aluminum

Camed Glass
- Chateau
- Classic Camed Insert
- Palisades
- Penrose
- Victorian
- Yorkshire

Classic Glass
- Bistro
- Prepared for Glass
- Prism
- Shadow

Etched Glass
- Crossroads
- Lisbon
- Modern Frosted Insert
- Prairie
- Satina

Layered Glass
- Antiquity
- Mirage
- Silk
- Wintersday

Mullion Doors
- Castlegate
- Evansville
- Hewitt
- Palladia
- Raleigh
- Showcase Mullion
- Traditional Mullion

Specialty Inserts
- Chalkboard Insert
- Leather Insert

Textured Glass
- Cascade
- Dolace
- Modern Textured Insert
- Moire
- Ravenna
- Styx
- Vauxhall

Parker House Finishes

❖ *Available as Standard*
● *Premium Upcharge*

		PDC1 Parker House Cherry	PDM1 Parker House Maple
Autumn Blush	AB	❖	
Autumn Blush Suede	C21	●	
Autumn Blush W/Onyx Glaze Suede	E10	●	
Autumn Blush W/Onyx Glaze	A56	●	
Baltic	D78	❖	
Baltic Suede	D80	●	
Biscotti	BO		●
Biscotti Suede	D36		●
Biscotti W/Cinder Glaze Suede	E24		●
Biscotti W/Cocoa Glaze Suede	E25		●
Biscotti W/Cinder Glaze	B91		●
Biscotti W/Cocoa Glaze	IG		●
Bonsai	E69		●
Bonsai Suede	E70		●
Burmese	E67		●
Burmese Suede	E68		●
Cabernet	CT	❖	❖
Cabernet Suede	C80	●	●
Cabernet W/Onyx Glaze Suede	E11	●	
Cabernet W/Onyx Glaze	A58	●	
Cannon Grey	D81	❖	
Cannon Grey Suede	D83	●	
Canvas	CV		●
Canvas Suede	D37		●
Canvas W/Cinder Glaze Suede	E26		●
Canvas W/Cocoa Glaze Suede	E27		●
Canvas W/Cinder Glaze	B90		●
Canvas W/Cocoa Glaze	VG		●
Chai	C29		●
Chai Suede	D39		●
Chai W/Cinder Glaze Suede	E28		●
Chai W/Cocoa Glaze Suede	E29		●
Chai W/Cinder Glaze	C32		●
Chai W/Cocoa Glaze	C30		●
Chestnut	CN		❖
Chestnut Suede	C23		●
Chestnut W/Onyx Glaze Suede	E12		●
Chestnut W/Onyx Glaze	A54		●
Chocolate	CC	❖	❖
Chocolate Suede	D87	●	●
Chocolate W/Ebony Glaze	EG	●	
Chocolate W/Ebony Glaze Suede	E13	●	
Cinnamon	CA	❖	❖
Cinnamon Suede	C74	●	●
Cinnamon W/Onyx Glaze Suede	E14	●	●
Cinnamon W/Onyx Glaze	A48	●	●
Cognac	CO	❖	❖
Cognac Suede	D85	●	●
Dove White	DW		●
Dove White Suede	D40		●
Dove White W/Cinder Glaze Suede	E30		●
Dove White W/Cocoa Glaze Suede	E31		●
Dove White W/Cinder Glaze	B89		●
Dove White W/Cocoa Glaze	A15		●
Ginger	C88	❖	❖
Ginger Suede	C19	●	●
Ginger W/Sable Glaze Suede	E15	●	●
Ginger W/Sable Glaze	C11	●	●
Greyloft	B65		●
Greyloft Suede	D41		●
Greyloft W/Sable Glaze Suede	E32		●
Greyloft W/Sable Glaze	B66		●
Hazel	C16	❖	
Hazel Suede	C17	●	
Honey Spice	HS	❖	❖
Honey Spice Suede	D88	●	●

		PDC1 Parker House Cherry	PDM1 Parker House Maple
Husk	B82	❖	
Husk Suede	C13	●	
Kaffé	KA	❖	❖
Kaffé Suede	C27	●	●
Lagoon	E63		●
Lagoon Suede	E64		●
Linen	D90		●
Linen Suede	D93		●
Linen W/Cinder Glaze Suede	E33		●
Linen W/Cocoa Glaze Suede	E34		●
Linen W/Cinder Glaze	D96		●
Linen W/Cocoa Glaze	D94		●
Midnight	B69		●
Midnight Suede	D42		●
Midnight W/Onyx Glaze Suede	E35		●
Midnight W/Onyx Glaze	B70		●
Molasses	E58	❖	❖
Molasses Suede	E59	●	●
Moonshine	D98		●
Moonshine Suede	E02		●
Moonshine W/Cinder Glaze Suede	E36		●
Moonshine W/Cocoa Glaze Suede	E37		●
Moonshine W/Cinder Glaze	E04		●
Moonshine W/Cocoa Glaze	E03		●
Mushroom	A11		●
Mushroom Suede	D43		●
Mushroom W/Cinder Glaze Suede	E38		●
Mushroom W/Cocoa Glaze Suede	E39		●
Mushroom W/Cinder Glaze	B92		●
Mushroom W/Cocoa Glaze	A12		●
Natural	NA	❖	❖
Natural Suede	D89	●	●
Onyx	A21		●
Onyx Suede	D44		●
Pebble Grey	B83		●
Pebble Grey Suede	D45		●
Pebble Grey W/Cocoa Glaze Suede	E40		●
Pebble Grey W/Cocoa Glaze	B84		●
Peppercorn	PC	❖	❖
Peppercorn Suede	D53	●	●
Praline	PR	❖	❖
Praline Suede	C78	●	●
Praline W/Onyx Glaze Suede	E16		●
Praline W/Onyx Glaze	A45		●
Saddle	B81	❖	❖
Saddle Suede	C12	●	●
Slate	B64	❖	❖
Slate Suede	C72	●	●
Sunset	SU	❖	
Sunset Suede	D49	●	
Surfside	E65		●
Surfside Suede	E66		●
Unfinished	UF	❖	❖

Polarcrest

Full Overlay

ND1 White Thermofoil Price Column G

Scan to view all Polarcrest doors

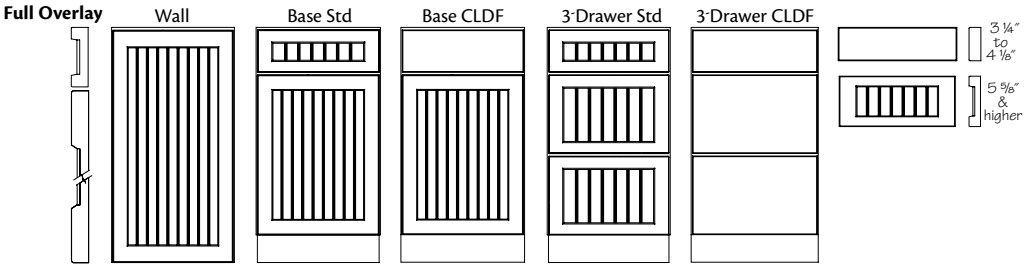

- Thermofoil on 3/4" thick MDF substrate
- Square recessed beaded panel on wall and base doors
- Recessed panel beaded drawer front
- Grooves are 1 1/2" on center
- Classic Drawer Front (CLDF) option available
- Concealed hinge
- Decorative hardware is required
- ***Note***: When CLDF option is applied, all drawer fronts will be slab

Remember, all Foil and Thermofoil door styles will have a natural birch interior and a white or cream Viraguard exterior. Also, the underside of the cabinets are natural birch. To cover the underside, order an Under Cabinet Panel.

Decorative Doors & Inserts Available

Aluminum Frame Glass
- Fresco Brushed Aluminum
- Vetro Brushed Aluminum

Camed Glass
- Chateau
- Classic Camed Insert
- Palisades
- Penrose
- Victorian
- Yorkshire

Classic Glass
- Bistro
- Prepared for Glass
- Prism
- Shadow

Etched Glass
- Crossroads
- Lisbon
- Modern Frosted Insert
- Prairie
- Satina

Layered Glass
- Antiquity
- Mirage
- Silk
- Wintersday

Mullion Doors
- Traditional Mullion

Specialty Inserts
- Chalkboard Insert
- Leather Insert

Textured Glass
- Cascade
- Dolace
- Modern Textured Insert
- Moire
- Ravenna
- Styx
- Vauxhall

Polarcrest Finishes

❖ *Available as Standard*
● *Premium Upcharge*

		Polarcrest
		ND1
White	WH	❖

Putnam

Scan to view all Putnam doors

Full Overlay

DRHC1	Cherry	Price Column N
DRHD1	EverCore™	Price Column I
DRHM1	Maple	Price Column K
AB2O1	Quartersawn Oak	Price Column J
DRHA1	Rustic Alder	Price Column K

Grey color coding indicates new product, size or code.

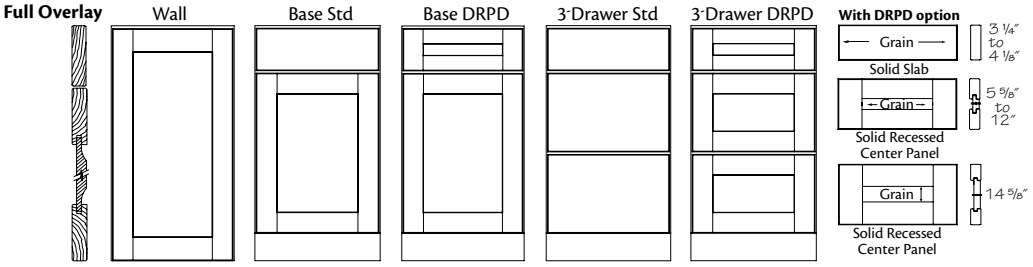

- Solid wood door frame with 3″ stiles and rails, except EverCore™, which will be mechanically compressed wood fiber
- Square solid recessed panel on wall and base doors, except EverCore™, which will be mechanically compressed wood fiber
- Slab drawer front
- Deluxe Recessed Panel Drawer (DRPD) front available
- Concealed hinge
- Decorative hardware is required
- ***Note***: Rustic door styles feature knotty or character wood. It contains character marks such as heartwood, worm holes and mineral streaks of varying size. Components of these doors are chosen at random, with the appearance of each individual door varying widely from very rustic to relatively clear and unmarked

Decorative Doors & Inserts Available

Aluminum Frame Glass
- Fresco Brushed Aluminum
- Vetro Brushed Aluminum

Camed Glass
- Chateau
- Classic Camed Insert
- Palisades
- Penrose
- Victorian
- Yorkshire

Classic Glass
- Bistro
- Prepared for Glass
- Prism
- Shadow

Etched Glass
- Crossroads
- Lisbon
- Modern Frosted Insert
- Prairie
- Satina

Layered Glass
- Antiquity
- Mirage
- Silk
- Wintersday

Mullion Doors
- Ambry ★
- Castlegate ★
- Evansville ★
- Hewitt ★
- Showcase Mullion ★
- Traditional Mullion★

Specialty Inserts
- Chalkboard Insert
- Leather Insert

Textured Glass
- Cascade
- Dolace
- Modern Textured Insert
- Moire
- Ravenna
- Styx
- Vauxhall

★ ***Not*** available in Rustic or Evercore™ door styles

Putnam Finishes

❖ *Available as Standard*
● *Premium Upcharge*

		DRHC1 Putnam Cherry	DRHD1 Putnam EverCore	DRHM1 Putnam Maple	AB2O1 Putnam Oak Square	DRHA1 Putnam Rustic Alder
Aged Concrete	E06			●		
Aged Papyrus	E05			●		
Aged River Rock	E07			●		
Autumn Blush	AB	❖			❖	❖
Autumn Blush Suede	C21	●			●	●
Autumn Blush W/Onyx Glaze Suede	E10	●			●	●
Autumn Blush W/Onyx Glaze	A56	●			●	●
Baltic	D78	❖			❖	❖
Baltic Suede	D80	●			●	●
Biscotti	BO		●	●		
Biscotti Suede	D36		●	●		
Biscotti W/Cinder Glaze Suede	E24			●		
Biscotti W/Cocoa Glaze Suede	E25			●		
Biscotti W/Cinder Glaze	B91			●		
Biscotti W/Cocoa Glaze	IG			●		
Bonsai	E69		●	●		
Bonsai Suede	E70		●	●		
Burmese	E67		●	●		
Burmese Suede	E68		●	●		
Burnished Autumn Blush	BA	●				●
Burnished Autumn Blush Suede	E17	●				●
Burnished Cabernet	BT	●				●
Burnished Cabernet Suede	E18	●				●
Burnished Chestnut	BH			●		
Burnished Chestnut Suede	E19			●		
Burnished Chocolate	BL	●				●
Burnished Chocolate Suede	E20	●				●
Burnished Cinnamon	A51	●		●		●
Burnished Cinnamon Suede	E21	●		●		●
Burnished Ginger	BE	●		●		●
Burnished Ginger Suede	E22	●		●		●
Burnished Praline	BP			●		●
Burnished Praline Suede	E23			●		●
Cabernet	CT	❖		❖		❖
Cabernet Suede	C80	●		●		●
Cabernet W/Onyx Glaze Suede	E11	●				●
Cabernet W/Onyx Glaze	A58	●				●
Cannon Grey	D81	❖			❖	❖
Cannon Grey Suede	D83	●			●	●
Canvas	CV		●	●		
Canvas Suede	D37		●	●		
Canvas W/Cinder Glaze Suede	E26			●		
Canvas W/Cocoa Glaze Suede	E27			●		
Canvas W/Cinder Glaze	B90			●		
Canvas W/Cocoa Glaze	VG			●		
Chai	C29		●	●		
Chai Suede	D39		●	●		
Chai W/Cinder Glaze Suede	E28			●		
Chai W/Cocoa Glaze Suede	E29			●		
Chai W/Cinder Glaze	C32			●		
Chai W/Cocoa Glaze	C30			●		
Chestnut	CN			❖		
Chestnut Suede	C23			●		
Chestnut W/Onyx Glaze Suede	E12			●		
Chestnut W/Onyx Glaze	A54			●		
Chocolate	CC	❖		❖		❖
Chocolate Suede	D87	●		●		●
Chocolate W/Ebony Glaze	EG	●				●
Chocolate W/Ebony Glaze Suede	E13	●				●
Cinnamon	CA	❖		❖		❖
Cinnamon Suede	C74	●		●		●
Cinnamon W/Onyx Glaze Suede	E14	●		●		●
Cinnamon W/Onyx Glaze	A48	●		●		●
Cognac	CO	❖		❖	❖	❖
Cognac Suede	D85	●		●	●	●
Distressed Autumn Blush	C22	●			●	●
Distressed Baltic	D79	●			●	●
Distressed Cabernet	C87	●		●		●
Distressed Cannon Grey	D82	●			●	●
Distressed Chestnut	C24			●		
Distressed Chocolate	D86	●		●		●
Distressed Cinnamon	C75	●		●		●
Distressed Cognac	D84	●		●	●	●
Distressed Fawn	D52				●	
Distressed Ginger	C20	●		●	●	●
Distressed Hazel	C18	●		●	●	●
Distressed Husk	C15	●		●	●	●
Distressed Kaffé	C28	●		●	●	●
Distressed Molasses	E60	●		●	●	●
Distressed Peppercorn	C86	●		●	●	●
Distressed Praline	C79	●		●	●	●
Distressed Saddle	C14	●		●	●	●
Distressed Slate	C73	●		●	●	
Distressed Sunset	D50	●				●
Dove White	DW		●	●		
Dove White Suede	D40		●	●		
Dove White W/Cinder Glaze Suede	E30			●		
Dove White W/Cocoa Glaze Suede	E31			●		
Dove White W/Cinder Glaze	B89			●		
Dove White W/Cocoa Glaze	A15			●		
Fawn	FN				❖	
Fawn Suede	D51				●	
Ginger	C88	❖		❖	❖	❖
Ginger Suede	C19	●		●	●	●
Ginger W/Sable Glaze Suede	E15	●		●	●	●
Ginger W/Sable Glaze	C11	●		●	●	●
Greyloft	B65		●	●		
Greyloft Suede	D41		●	●		
Greyloft W/Sable Glaze Suede	E32			●		
Greyloft W/Sable Glaze	B66			●		
Hazel	C16	❖			❖	❖
Hazel Suede	C17	●			●	●
Honey Spice	HS	❖		❖	❖	❖
Honey Spice Suede	D88	●		●	●	●
Husk	B82	❖			❖	❖
Husk Suede	C13	●			●	●
Kaffé	KA	❖		❖	❖	❖
Kaffé Suede	C27	●		●	●	●
Lagoon	E63		●	●		
Lagoon Suede	E64		●	●		
Linen	D90		●	●		
Linen Suede	D93		●	●		
Linen W/Cinder Glaze Suede	E33			●		
Linen W/Cocoa Glaze Suede	E34			●		
Linen W/Cinder Glaze	D96			●		
Linen W/Cocoa Glaze	D94			●		
Midnight	B69		●	●		
Midnight Suede	D42		●	●		
Midnight W/Onyx Glaze Suede	E35			●		
Midnight W/Onyx Glaze	B70			●		
Molasses	E58	❖		❖	❖	❖
Molasses Suede	E59	●		●	●	●
Moonshine	D98		●	●		
Moonshine Suede	E02		●	●		
Moonshine W/Cinder Glaze Suede	E36			●		
Moonshine W/Cocoa Glaze Suede	E37			●		
Moonshine W/Cinder Glaze	E04			●		
Moonshine W/Cocoa Glaze	E03			●		
Mushroom	A11		●	●		
Mushroom Suede	D43		●	●		
Mushroom W/Cinder Glaze Suede	E38			●		
Mushroom W/Cocoa Glaze Suede	E39			●		
Mushroom W/Cinder Glaze	B92			●		
Mushroom W/Cocoa Glaze	A12			●		
Natural	NA	❖		❖	❖	❖
Natural Suede	D89	●		●	●	●
Onyx	A21		●	●	●	

Continued on next page

Putnam Finishes Continued

❖ *Available as Standard*
● *Premium Upcharge*

		DRHC1	DRHD1	DRHM1	AB2O1	DRHA1
		Putnam Cherry	Putnam EverCore	Putnam Maple	Putnam Oak Square	Putnam Rustic Alder
Onyx Suede	D44		●	●	●	
Pebble Grey	B83		●	●		
Pebble Grey Suede	D45		●	●		
Pebble Grey W/Cocoa Glaze Suede	E40			●		
Pebble Grey W/Cocoa Glaze	B84			●		
Peppercorn	PC	❖		❖	❖	❖
Peppercorn Suede	D53	●		●	●	●
Praline	PR	❖		❖	❖	❖
Praline Suede	C78	●		●	●	●
Praline W/Onyx Glaze Suede	E16			●		
Praline W/Onyx Glaze	A45			●		
Saddle	B81	❖		❖	❖	❖
Saddle Suede	C12	●		●	●	●
Slate	B64	❖		❖	❖	
Slate Suede	C72	●		●	●	
Sunset	SU	❖				❖
Sunset Suede	D49	●				●
Surfside	E65		●	●		
Surfside Suede	E66		●	●		
Unfinished	UF	❖		❖	❖	❖
Vintage Biscotti	VS	●				
Vintage Biscotti Suede	E41	●				
Vintage Canvas	VC	●				
Vintage Canvas Suede	E42	●				
Vintage Chai	C35	●				
Vintage Chai Suede	E43	●				
Vintage Dove White	VD	●				
Vintage Dove White Suede	E44	●				
Vintage Greyloft	B67	●				
Vintage Greyloft Suede	E45	●				
Vintage Linen	D91	●				
Vintage Linen Suede	E46	●				
Vintage Midnight	B71	●				
Vintage Midnight Suede	E47	●				
Vintage Moonshine	D99	●				
Vintage Moonshine Suede	E48	●				
Vintage Mushroom	A13	●				
Vintage Mushroom Suede	E49	●				
Vintage Onyx	VO	●				
Vintage Onyx Suede	E50	●				
Vintage Pebble Grey	B86	●				
Vintage Pebble Grey Suede	E51	●				

Renway

Full Overlay

AH5C1 Cherry Price Column G

AH5M1 Maple Price Column F

Scan to view all Renway doors

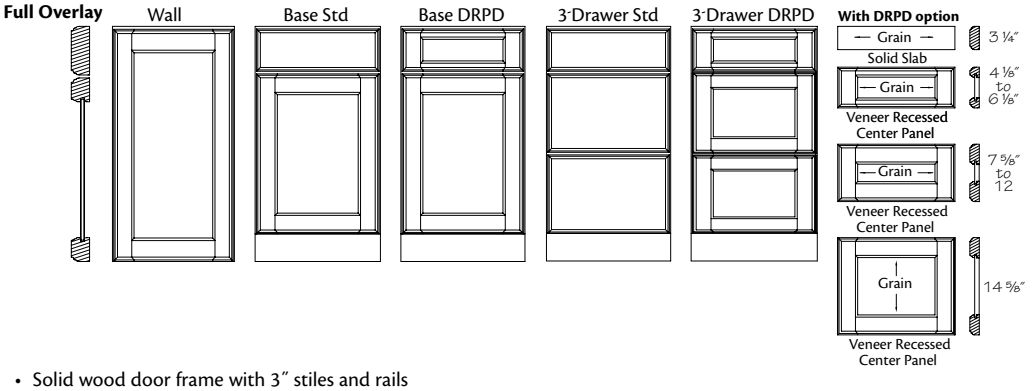

- Solid wood door frame with 3″ stiles and rails
- Square veneer recessed panel on wall and base doors
- Slab drawer front
- Deluxe Recessed Panel Drawer (DRPD) front available
- Concealed hinge
- Decorative hardware is required

Decorative Doors & Inserts Available

Aluminum Frame Glass
- Fresco Brushed Aluminum
- Vetro Brushed Aluminum

Camed Glass
- Chateau
- Classic Camed Insert
- Palisades
- Penrose
- Victorian
- Yorkshire

Classic Glass
- Bistro
- Prepared for Glass
- Prism
- Shadow

Etched Glass
- Crossroads
- Lisbon
- Modern Frosted Insert
- Prairie
- Satina

Layered Glass
- Antiquity
- Mirage
- Silk
- Wintersday

Mullion Doors
- Ambry
- Castlegate
- Evansville
- Hewitt
- Showcase Mullion
- Traditional Mullion

Specialty Inserts
- Chalkboard Insert
- Leather Insert

Textured Glass
- Cascade
- Dolace
- Modern Textured Insert
- Moire
- Ravenna
- Styx
- Vauxhall

Renway Finishes

❖ *Available as Standard*
● *Premium Upcharge*

		AH5C1 Renway Cherry	AH5M1 Renway Maple
Autumn Blush	AB	❖	
Autumn Blush Suede	C21	●	
Autumn Blush W/Onyx Glaze Suede	E10	●	
Autumn Blush W/Onyx Glaze	A56	●	
Baltic	D78	❖	
Baltic Suede	D80	●	
Biscotti	BO		●
Biscotti Suede	D36		●
Biscotti W/Cinder Glaze Suede	E24		●
Biscotti W/Cocoa Glaze Suede	E25		●
Biscotti W/Cinder Glaze	B91		●
Biscotti W/Cocoa Glaze	IG		●
Bonsai	E69		●
Bonsai Suede	E70		●
Burmese	E67		●
Burmese Suede	E68		●
Cabernet	CT	❖	❖
Cabernet Suede	C80	●	●
Cabernet W/Onyx Glaze Suede	E11	●	
Cabernet W/Onyx Glaze	A58	●	
Cannon Grey	D81	❖	
Cannon Grey Suede	D83	●	
Canvas	CV		●
Canvas Suede	D37		●
Canvas W/Cinder Glaze Suede	E26		●
Canvas W/Cocoa Glaze Suede	E27		●
Canvas W/Cinder Glaze	B90		●
Canvas W/Cocoa Glaze	VG		●
Chai	C29		●
Chai Suede	D39		●
Chai W/Cinder Glaze Suede	E28		●
Chai W/Cocoa Glaze Suede	E29		●
Chai W/Cinder Glaze	C32		●
Chai W/Cocoa Glaze	C30		●
Chestnut	CN		❖
Chestnut Suede	C23		●
Chestnut W/Onyx Glaze Suede	E12		●
Chestnut W/Onyx Glaze	A54		●
Chocolate	CC	❖	❖
Chocolate Suede	D87	●	●
Chocolate W/Ebony Glaze	EG	●	
Chocolate W/Ebony Glaze Suede	E13	●	
Cinnamon	CA	❖	❖
Cinnamon Suede	C74	●	●
Cinnamon W/Onyx Glaze Suede	E14	●	●
Cinnamon W/Onyx Glaze	A48	●	●
Cognac	CO	❖	❖
Cognac Suede	D85	●	●
Dove White	DW		●
Dove White Suede	D40		●
Dove White W/Cinder Glaze Suede	E30		●
Dove White W/Cocoa Glaze Suede	E31		●
Dove White W/Cinder Glaze	B89		●
Dove White W/Cocoa Glaze	A15		●
Ginger	C88	❖	❖
Ginger Suede	C19	●	●
Ginger W/Sable Glaze Suede	E15	●	●
Ginger W/Sable Glaze	C11	●	●
Greyloft	B65		●
Greyloft Suede	D41		●
Greyloft W/Sable Glaze Suede	E32		●
Greyloft W/Sable Glaze	B66		●
Hazel	C16	❖	
Hazel Suede	C17	●	
Honey Spice	HS	❖	❖
Honey Spice Suede	D88	●	●
Husk	B82	❖	
Husk Suede	C13	●	
Kaffé	KA	❖	❖
Kaffé Suede	C27	●	●
Lagoon	E63		●
Lagoon Suede	E64		●
Linen	D90		●
Linen Suede	D93		●
Linen W/Cinder Glaze Suede	E33		●
Linen W/Cocoa Glaze Suede	E34		●
Linen W/Cinder Glaze	D96		●
Linen W/Cocoa Glaze	D94		●
Midnight	B69		●
Midnight Suede	D42		●
Midnight W/Onyx Glaze Suede	E35		●
Midnight W/Onyx Glaze	B70		●
Molasses	E58	❖	❖
Molasses Suede	E59	●	●
Moonshine	D98		●
Moonshine Suede	E02		●
Moonshine W/Cinder Glaze Suede	E36		●
Moonshine W/Cocoa Glaze Suede	E37		●
Moonshine W/Cinder Glaze	E04		●
Moonshine W/Cocoa Glaze	E03		●
Mushroom	A11		●
Mushroom Suede	D43		●
Mushroom W/Cinder Glaze Suede	E38		●
Mushroom W/Cocoa Glaze Suede	E39		●
Mushroom W/Cinder Glaze	B92		●
Mushroom W/Cocoa Glaze	A12		●
Natural	NA	❖	❖
Natural Suede	D89	●	●
Onyx	A21		●
Onyx Suede	D44		●
Pebble Grey	B83		●
Pebble Grey Suede	D45		●
Pebble Grey W/Cocoa Glaze Suede	E40		●
Pebble Grey W/Cocoa Glaze	B84		●
Peppercorn	PC	❖	❖
Peppercorn Suede	D53	●	●
Praline	PR	❖	❖
Praline Suede	C78	●	●
Praline W/Onyx Glaze Suede	E16		●
Praline W/Onyx Glaze	A45		●
Saddle	B81	❖	❖
Saddle Suede	C12	●	●
Slate	B64	❖	❖
Slate Suede	C72	●	●
Sunset	SU	❖	
Sunset Suede	D49	●	
Surfside	E65		●
Surfside Suede	E66		●
Unfinished	UF	❖	❖

Rutherford

Full Overlay

RTC1	Cherry	Price Column O
RTM1	Maple	Price Column N

Scan to view all Rutherford doors

Full Overlay

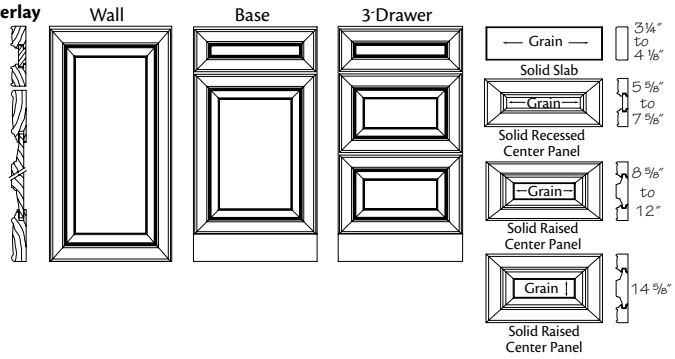

- Solid wood mitered door frame with 2 3/8" stiles and rails
- Square solid raised panel on wall and base doors
- Drawer front varies depending on height
- Concealed hinge
- Decorative hardware is required

Decorative Doors & Inserts Available

Aluminum Frame Glass
- Fresco Brushed Aluminum
- Vetro Brushed Aluminum

Camed Glass
- Chateau
- Classic Camed Insert
- Palisades
- Penrose
- Victorian
- Yorkshire

Classic Glass
- Bistro
- Prepared for Glass
- Prism
- Shadow

Etched Glass
- Crossroads
- Lisbon
- Modern Frosted Insert
- Prairie
- Satina

Layered Glass
- Antiquity
- Mirage
- Silk
- Wintersday

Mullion Doors
- Castlegate
- Evansville
- Hewitt
- Palladia
- Raleigh
- Showcase Mullion
- Traditional Mullion

Specialty Inserts
- Chalkboard Insert
- Leather Insert

Textured Glass
- Cascade
- Dolace
- Modern Textured Insert
- Moire
- Ravenna
- Styx
- Vauxhall

Rutherford Finishes

❖ *Available as Standard*
● *Premium Upcharge*

		RTC1 Rutherford Cherry	RTM1 Rutherford Maple
Aged Concrete	E06		●
Aged Papyrus	E05		●
Aged River Rock	E07		●
Autumn Blush	AB	❖	
Autumn Blush Suede	C21	●	
Autumn Blush W/Onyx Glaze Suede	E10	●	
Autumn Blush W/Onyx Glaze	A56	●	
Baltic	D78	❖	
Baltic Suede	D80	●	
Biscotti	BO		●
Biscotti Suede	D36		●
Biscotti W/Cinder Glaze Suede	E24		●
Biscotti W/Cocoa Glaze Suede	E25		●
Biscotti W/Cinder Glaze	B91		●
Biscotti W/Cocoa Glaze	IG		●
Bonsai	E69		●
Bonsai Suede	E70		●
Burmese	E67		●
Burmese Suede	E68		●
Burnished Autumn Blush	BA	●	
Burnished Autumn Blush Suede	E17	●	
Burnished Cabernet	BT	●	
Burnished Cabernet Suede	E18	●	
Burnished Chestnut	BH		●
Burnished Chestnut Suede	E19		●
Burnished Chocolate	BL	●	
Burnished Chocolate Suede	E20	●	
Burnished Cinnamon	A51	●	●
Burnished Cinnamon Suede	E21	●	●
Burnished Ginger	BE	●	●
Burnished Ginger Suede	E22	●	●
Burnished Praline	BP		●
Burnished Praline Suede	E23		●
Cabernet	CT	❖	❖
Cabernet Suede	C80	●	●
Cabernet W/Onyx Glaze Suede	E11	●	
Cabernet W/Onyx Glaze	A58	●	
Cannon Grey	D81	❖	
Cannon Grey Suede	D83	●	
Canvas	CV		●
Canvas Suede	D37		●
Canvas W/Cinder Glaze Suede	E26		●
Canvas W/Cocoa Glaze Suede	E27		●
Canvas W/Cinder Glaze	B90		●
Canvas W/Cocoa Glaze	VG		●
Chai	C29		●
Chai Suede	D39		●
Chai W/Cinder Glaze Suede	E28		●
Chai W/Cocoa Glaze Suede	E29		●
Chai W/Cinder Glaze	C32		●
Chai W/Cocoa Glaze	C30		●
Chestnut	CN		❖
Chestnut Suede	C23		●
Chestnut W/Onyx Glaze Suede	E12		●
Chestnut W/Onyx Glaze	A54		●
Chocolate	CC	❖	❖
Chocolate Suede	D87	●	●
Chocolate W/Ebony Glaze	EG	●	
Chocolate W/Ebony Glaze Suede	E13	●	
Cinnamon	CA	❖	❖
Cinnamon Suede	C74	●	●
Cinnamon W/Onyx Glaze Suede	E14	●	●
Cinnamon W/Onyx Glaze	A48	●	●
Cognac	CO	❖	❖
Cognac Suede	D85	●	●
Distressed Autumn Blush	C22	●	
Distressed Baltic	D79	●	
Distressed Cabernet	C87	●	●
Distressed Cannon Grey	D82	●	
Distressed Chestnut	C24		●
Distressed Chocolate	D86	●	●
Distressed Cinnamon	C75	●	●
Distressed Cognac	D84	●	●
Distressed Ginger	C20	●	●
Distressed Hazel	C18	●	●
Distressed Husk	C15	●	●
Distressed Kaffé	C28	●	●
Distressed Molasses	E60	●	●
Distressed Peppercorn	C86	●	●
Distressed Praline	C79	●	●
Distressed Saddle	C14	●	●
Distressed Slate	C73	●	●
Distressed Sunset	D50	●	
Dove White	DW		●
Dove White Suede	D40		●
Dove White W/Cinder Glaze Suede	E30		●
Dove White W/Cocoa Glaze Suede	E31		●
Dove White W/Cinder Glaze	B89		●
Dove White W/Cocoa Glaze	A15		●
Ginger	C88	❖	❖
Ginger Suede	C19	●	●
Ginger W/Sable Glaze Suede	E15	●	●
Ginger W/Sable Glaze	C11	●	●
Greyloft	B65		●
Greyloft Suede	D41		●
Greyloft W/Sable Glaze Suede	E32		●
Greyloft W/Sable Glaze	B66		●
Hazel	C16	❖	
Hazel Suede	C17	●	
Honey Spice	HS	❖	❖
Honey Spice Suede	D88	●	●
Husk	B82	❖	
Husk Suede	C13	●	
Kaffé	KA	❖	❖
Kaffé Suede	C27	●	●
Lagoon	E63		●
Lagoon Suede	E64		●
Linen	D90		●
Linen Suede	D93		●
Linen W/Cinder Glaze Suede	E33		●
Linen W/Cocoa Glaze Suede	E34		●
Linen W/Cinder Glaze	D96		●
Linen W/Cocoa Glaze	D94		●
Midnight	B69		●
Midnight Suede	D42		●
Midnight W/Onyx Glaze Suede	E35		●
Midnight W/Onyx Glaze	B70		●
Molasses	E58	❖	❖
Molasses Suede	E59	●	●
Moonshine	D98		●
Moonshine Suede	E02		●
Moonshine W/Cinder Glaze Suede	E36		●
Moonshine W/Cocoa Glaze Suede	E37		●
Moonshine W/Cinder Glaze	E04		●
Moonshine W/Cocoa Glaze	E03		●
Mushroom	A11		●
Mushroom Suede	D43		●
Mushroom W/Cinder Glaze Suede	E38		●
Mushroom W/Cocoa Glaze Suede	E39		●
Mushroom W/Cinder Glaze	B92		●
Mushroom W/Cocoa Glaze	A12		●
Natural	NA	❖	❖
Natural Suede	D89	●	●
Onyx	A21		●
Onyx Suede	D44		●
Pebble Grey	B83		●
Pebble Grey Suede	D45		●
Pebble Grey W/Cocoa Glaze Suede	E40		●
Pebble Grey W/Cocoa Glaze	B84		●
Peppercorn	PC	❖	❖
Peppercorn Suede	D53	●	●
Praline	PR	❖	❖
Praline Suede	C78	●	●
Praline W/Onyx Glaze Suede	E16		●
Praline W/Onyx Glaze	A45		●
Saddle	B81	❖	❖
Saddle Suede	C12	●	●
Slate	B64	❖	❖
Slate Suede	C72	●	●
Sunset	SU	❖	
Sunset Suede	D49	●	
Surfside	E65		●
Surfside Suede	E66		●
Unfinished	UF	❖	❖
Vintage Biscotti	VS	●	
Vintage Biscotti Suede	E41	●	
Vintage Canvas	VC	●	
Vintage Canvas Suede	E42	●	
Vintage Chai	C35	●	
Vintage Chai Suede	E43	●	
Vintage Dove White	VD	●	
Vintage Dove White Suede	E44	●	
Vintage Greyloft	B67	●	
Vintage Greyloft Suede	E45	●	
Vintage Linen	D91	●	
Vintage Linen Suede	E46	●	
Vintage Midnight	B71	●	
Vintage Midnight Suede	E47	●	
Vintage Moonshine	D99	●	
Vintage Moonshine Suede	E48	●	
Vintage Mushroom	A13	●	
Vintage Mushroom Suede	E49	●	
Vintage Onyx	VO	●	
Vintage Onyx Suede	E50	●	
Vintage Pebble Grey	B86	●	
Vintage Pebble Grey Suede	E51	●	

Sedona

Scan to view all Sedona doors

Full Overlay

AC8B1	Birch	Price Column E
SNC1	Cherry	Price Column I
AC8D1	EverCore™	Price Column E
AC8H1	Hickory	Price Column F
SNM1	Maple	Price Column G
AC8O1	Oak	Price Column E
SNA1	Rustic Alder	Price Column G

Grey color coding indicates new product, size or code.

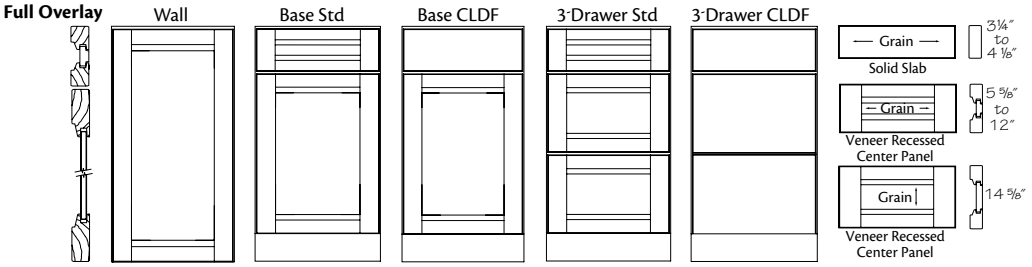

- Solid wood door frame with 2 3/4" stiles and rails, except EverCore™, which will be mechanically compressed wood fiber
- Square veneer recessed panel on wall and base doors, except EverCore™, which will be mechanically compressed wood fiber
- Drawer front varies depending on height
- Classic Drawer Front (CLDF) option available
- Concealed hinge
- Decorative hardware is required
- ***Note***: When CLDF option is applied, all drawer fronts will be slab
- ***Note***: Rustic door styles feature knotty or character wood. It contains character marks such as heartwood, worm holes and mineral streaks of varying size. Components of these doors are chosen at random, with the appearance of each individual door varying widely from very rustic to relatively clear and unmarked

Decorative Doors & Inserts Available

Aluminum Frame Glass
- Fresco Brushed Aluminum
- Vetro Brushed Aluminum

Camed Glass
- Chateau
- Classic Camed Insert
- Palisades
- Penrose
- Victorian
- Yorkshire

Classic Glass
- Bistro
- Prepared for Glass
- Prism
- Shadow

Etched Glass
- Crossroads
- Lisbon
- Modern Frosted Insert
- Prairie
- Satina

Layered Glass
- Antiquity
- Mirage
- Silk
- Wintersday

Mullion Doors
- Ambry ★
- Castlegate ★
- Evansville ★
- Hewitt ★
- Showcase Mullion ★
- Traditional Mullion ★
- Vista Mullion ★

Specialty Inserts
- Chalkboard Insert
- Leather Insert

Textured Glass
- Cascade
- Dolace
- Modern Textured Insert
- Moire
- Ravenna
- Styx
- Vauxhall

★ ***Not*** available in Rustic or Evercore™ door styles
▲ Only available in Cherry & Maple door styles

Sedona Finishes

❖ *Available as Standard*
● *Premium Upcharge*

		AC8B1	SNC1	AC8D1	AC8H1	SNM1	AC8O1	SNA1
		Sedona Birch	Sedona Cherry	Sedona EverCore	Sedona Hickory	Sedona Maple	Sedona Oak	Sedona Rustic Alder
Autumn Blush	AB		❖				❖	❖
Autumn Blush Suede	C21		●				●	●
Autumn Blush W/Onyx Glaze Suede	E10		●				●	●
Autumn Blush W/Onyx Glaze	A56		●				●	●
Baltic	D78		❖				❖	❖
Baltic Suede	D80		●				●	●
Biscotti	BO			●		●		
Biscotti Suede	D36			●		●		
Biscotti W/Cinder Glaze Suede	E24					●		
Biscotti W/Cocoa Glaze Suede	E25					●		
Biscotti W/Cinder Glaze	B91					●		
Biscotti W/Cocoa Glaze	IG					●		
Bonsai	E69			●		●		
Bonsai Suede	E70			●		●		
Burmese	E67			●		●		
Burmese Suede	E68			●		●		
Cabernet	CT	❖	❖			❖		❖
Cabernet Suede	C80	●	●			●		●
Cabernet W/Onyx Glaze Suede	E11		●					●
Cabernet W/Onyx Glaze	A58		●					●
Cannon Grey	D81		❖				❖	❖
Cannon Grey Suede	D83		●				●	●
Canvas	CV			●		●		
Canvas Suede	D37			●		●		
Canvas W/Cinder Glaze Suede	E26					●		
Canvas W/Cocoa Glaze Suede	E27					●		
Canvas W/Cinder Glaze	B90					●		
Canvas W/Cocoa Glaze	VG					●		
Chai	C29			●		●		
Chai Suede	D39			●		●		
Chai W/Cinder Glaze Suede	E28					●		
Chai W/Cocoa Glaze Suede	E29					●		
Chai W/Cinder Glaze	C32					●		
Chai W/Cocoa Glaze	C30					●		
Chestnut	CN	❖				❖		
Chestnut Suede	C23	●				●		
Chestnut W/Onyx Glaze Suede	E12					●		
Chestnut W/Onyx Glaze	A54					●		
Chocolate	CC	❖	❖			❖		❖
Chocolate Suede	D87	●	●			●		●
Chocolate W/Ebony Glaze	EG		●					●
Chocolate W/Ebony Glaze Suede	E13		●					●
Cinnamon	CA	❖	❖			❖		❖
Cinnamon Suede	C74	●	●			●		●
Cinnamon W/Onyx Glaze Suede	E14		●			●		●
Cinnamon W/Onyx Glaze	A48		●			●		●
Cognac	CO	❖	❖		❖	❖	❖	❖
Cognac Suede	D85	●	●		●	●	●	●
Dove White	DW			●		●		
Dove White Suede	D40			●		●		
Dove White W/Cinder Glaze Suede	E30					●		
Dove White W/Cocoa Glaze Suede	E31					●		
Dove White W/Cinder Glaze	B89					●		
Dove White W/Cocoa Glaze	A15					●		
Fawn	FN						❖	
Fawn Suede	D51						●	
Ginger	C88	❖	❖		❖	❖	❖	❖
Ginger Suede	C19	●	●		●	●	●	●
Ginger W/Sable Glaze Suede	E15	●	●		●	●	●	●
Ginger W/Sable Glaze	C11	●	●		●	●	●	●
Greyloft	B65			●		●		
Greyloft Suede	D41			●		●		
Greyloft W/Sable Glaze Suede	E32					●		
Greyloft W/Sable Glaze	B66					●		
Hazel	C16	❖	❖		❖		❖	❖
Hazel Suede	C17	●	●		●		●	●

		AC8B1	SNC1	AC8D1	AC8H1	SNM1	AC8O1	SNA1
		Sedona Birch	Sedona Cherry	Sedona EverCore	Sedona Hickory	Sedona Maple	Sedona Oak	Sedona Rustic Alder
Honey Spice	HS	❖	❖		❖	❖	❖	❖
Honey Spice Suede	D88	●	●		●	●	●	●
Husk	B82	❖	❖		❖		❖	❖
Husk Suede	C13	●	●		●		●	●
Kaffé	KA	❖	❖		❖	❖	❖	❖
Kaffé Suede	C27	●	●		●	●	●	●
Lagoon	E63			●		●		
Lagoon Suede	E64			●		●		
Linen	D90			●		●		
Linen Suede	D93			●		●		
Linen W/Cinder Glaze Suede	E33					●		
Linen W/Cocoa Glaze Suede	E34					●		
Linen W/Cinder Glaze	D96					●		
Linen W/Cocoa Glaze	D94					●		
Midnight	B69			●		●		
Midnight Suede	D42			●		●		
Midnight W/Onyx Glaze Suede	E35					●		
Midnight W/Onyx Glaze	B70					●		
Molasses	E58	❖	❖		❖	❖	❖	❖
Molasses Suede	E59	●	●		●	●	●	●
Moonshine	D98			●		●		
Moonshine Suede	E02			●		●		
Moonshine W/Cinder Glaze Suede	E36					●		
Moonshine W/Cocoa Glaze Suede	E37					●		
Moonshine W/Cinder Glaze	E04					●		
Moonshine W/Cocoa Glaze	E03					●		
Mushroom	A11			●		●		
Mushroom Suede	D43			●		●		
Mushroom W/Cinder Glaze Suede	E38					●		
Mushroom W/Cocoa Glaze Suede	E39					●		
Mushroom W/Cinder Glaze	B92					●		
Mushroom W/Cocoa Glaze	A12					●		
Natural	NA	❖	❖		❖	❖	❖	❖
Natural Suede	D89	●	●		●	●	●	●
Onyx	A21			●		●	●	
Onyx Suede	D44			●		●	●	
Pebble Grey	B83			●		●		
Pebble Grey Suede	D45			●		●		
Pebble Grey W/Cocoa Glaze Suede	E40					●		
Pebble Grey W/Cocoa Glaze	B84					●		
Peppercorn	PC		❖			❖	❖	❖
Peppercorn Suede	D53		●			●	●	●
Praline	PR	❖	❖		❖	❖	❖	❖
Praline Suede	C78	●	●		●	●	●	●
Praline W/Onyx Glaze Suede	E16				●	●		
Praline W/Onyx Glaze	A45				●	●		
Saddle	B81	❖	❖		❖	❖	❖	❖
Saddle Suede	C12	●	●		●	●	●	●
Slate	B64	❖	❖		❖	❖	❖	
Slate Suede	C72	●	●		●	●	●	
Sunset	SU		❖		❖			❖
Sunset Suede	D49		●		●			●
Surfside	E65			●		●		
Surfside Suede	E66			●		●		
Unfinished	UF	❖	❖		❖	❖	❖	❖

Seton

Full Overlay

AB0C1 Cherry Price Column O

AB0M1 Maple Price Column M

Scan to view all Seton doors

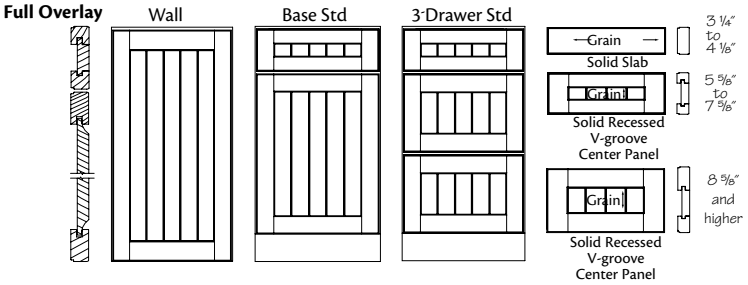

- Solid wood door frame with 2 5/8" stiles and rails
- Square solid V-Groove recessed panel on wall and base doors
- Grooves are 2 1/2" on center
- Wood grain orientation on drawer fronts is vertical, unless noted
- Drawer front varies depending on height
- Concealed hinge
- Decorative hardware is required

Decorative Doors & Inserts Available

Aluminum Frame Glass
- Fresco Brushed Aluminum
- Vetro Brushed Aluminum

Camed Glass
- Chateau
- Classic Camed Insert
- Palisades
- Penrose
- Victorian
- Yorkshire

Classic Glass
- Bistro
- Prepared for Glass
- Prism
- Shadow

Etched Glass
- Crossroads
- Lisbon
- Modern Frosted Insert
- Prairie
- Satina

Layered Glass
- Antiquity
- Mirage
- Silk
- Wintersday

Mullion Doors
- Ambry
- Castlegate
- Evansville
- Hewitt
- Showcase Mullion
- Traditional Mullion

Specialty Inserts
- Leather Insert

Textured Glass
- Cascade
- Dolace
- Modern Textured Insert
- Moire
- Ravenna
- Styx
- Vauxhall

Seton Finishes

❖ *Available as Standard*
● *Premium Upcharge*

		AB0C1 Seton Cherry Square	AB0M1 Seton Maple Square
Aged Concrete	E06		●
Aged Papyrus	E05		●
Aged River Rock	E07		●
Autumn Blush	AB	❖	
Autumn Blush Suede	C21	●	
Autumn Blush W/Onyx Glaze Suede	E10	●	
Autumn Blush W/Onyx Glaze	A56	●	
Baltic	D78	❖	
Baltic Suede	D80	●	
Biscotti	BO		●
Biscotti Suede	D36		●
Biscotti W/Cinder Glaze Suede	E24		●
Biscotti W/Cocoa Glaze Suede	E25		●
Biscotti W/Cinder Glaze	B91		●
Biscotti W/Cocoa Glaze	IG		●
Bonsai	E69		●
Bonsai Suede	E70		●
Burmese	E67		●
Burmese Suede	E68		●
Burnished Autumn Blush	BA	●	
Burnished Autumn Blush Suede	E17	●	
Burnished Cabernet	BT	●	
Burnished Cabernet Suede	E18	●	
Burnished Chestnut	BH		●
Burnished Chestnut Suede	E19		●
Burnished Chocolate	BL	●	
Burnished Chocolate Suede	E20	●	
Burnished Cinnamon	A51	●	●
Burnished Cinnamon Suede	E21	●	●
Burnished Ginger	BE	●	●
Burnished Ginger Suede	E22	●	●
Burnished Praline	BP		●
Burnished Praline Suede	E23		●
Cabernet	CT	❖	❖
Cabernet Suede	C80	●	●
Cabernet W/Onyx Glaze Suede	E11	●	
Cabernet W/Onyx Glaze	A58	●	
Cannon Grey	D81	❖	
Cannon Grey Suede	D83	●	
Canvas	CV		●
Canvas Suede	D37		●
Canvas W/Cinder Glaze Suede	E26		●
Canvas W/Cocoa Glaze Suede	E27		●
Canvas W/Cinder Glaze	B90		●
Canvas W/Cocoa Glaze	VG		●
Chai	C29		●
Chai Suede	D39		●
Chai W/Cinder Glaze Suede	E28		●
Chai W/Cocoa Glaze Suede	E29		●
Chai W/Cinder Glaze	C32		●
Chai W/Cocoa Glaze	C30		●
Chestnut	CN		❖
Chestnut Suede	C23		●
Chestnut W/Onyx Glaze Suede	E12		●
Chestnut W/Onyx Glaze	A54		●
Chocolate	CC	❖	❖
Chocolate Suede	D87	●	●
Chocolate W/Ebony Glaze	EG	●	
Chocolate W/Ebony Glaze Suede	E13	●	
Cinnamon	CA	❖	❖
Cinnamon Suede	C74	●	●
Cinnamon W/Onyx Glaze Suede	E14	●	●
Cinnamon W/Onyx Glaze	A48	●	●
Cognac	CO	❖	❖
Cognac Suede	D85	●	●
Distressed Autumn Blush	C22	●	
Distressed Baltic	D79	●	
Distressed Cabernet	C87	●	●
Distressed Cannon Grey	D82	●	
Distressed Chestnut	C24		●
Distressed Chocolate	D86	●	●
Distressed Cinnamon	C75	●	●
Distressed Cognac	D84	●	●
Distressed Ginger	C20	●	●
Distressed Hazel	C18	●	●
Distressed Husk	C15	●	●
Distressed Kaffé	C28	●	●
Distressed Molasses	E60	●	●
Distressed Peppercorn	C86	●	●
Distressed Praline	C79	●	●
Distressed Saddle	C14	●	●
Distressed Slate	C73	●	●
Distressed Sunset	D50	●	
Dove White	DW		●
Dove White Suede	D40		●
Dove White W/Cinder Glaze Suede	E30		●
Dove White W/Cocoa Glaze Suede	E31		●
Dove White W/Cinder Glaze	B89		●
Dove White W/Cocoa Glaze	A15		●
Ginger	C88	❖	❖
Ginger Suede	C19	●	●
Ginger W/Sable Glaze Suede	E15	●	●
Ginger W/Sable Glaze	C11	●	●
Greyloft	B65		●
Greyloft Suede	D41		●
Greyloft W/Sable Glaze Suede	E32		●
Greyloft W/Sable Glaze	B66		●
Hazel	C16	❖	
Hazel Suede	C17	●	
Honey Spice	HS	❖	❖
Honey Spice Suede	D88	●	●
Husk	B82	❖	
Husk Suede	C13	●	
Kaffé	KA	❖	❖
Kaffé Suede	C27	●	●
Lagoon	E63		●
Lagoon Suede	E64		●
Linen	D90		●
Linen Suede	D93		●
Linen W/Cinder Glaze Suede	E33		●
Linen W/Cocoa Glaze Suede	E34		●
Linen W/Cinder Glaze	D96		●
Linen W/Cocoa Glaze	D94		●
Midnight	B69		●
Midnight Suede	D42		●
Midnight W/Onyx Glaze Suede	E35		●
Midnight W/Onyx Glaze	B70		●
Molasses	E58	❖	❖
Molasses Suede	E59	●	●
Moonshine	D98		●
Moonshine Suede	E02		●
Moonshine W/Cinder Glaze Suede	E36		●
Moonshine W/Cocoa Glaze Suede	E37		●
Moonshine W/Cinder Glaze	E04		●
Moonshine W/Cocoa Glaze	E03		●
Mushroom	A11		●
Mushroom Suede	D43		●
Mushroom W/Cinder Glaze Suede	E38		●
Mushroom W/Cocoa Glaze Suede	E39		●
Mushroom W/Cinder Glaze	B92		●
Mushroom W/Cocoa Glaze	A12		●
Natural	NA	❖	❖
Natural Suede	D89	●	●
Onyx	A21		●
Onyx Suede	D44		●
Pebble Grey	B83		●
Pebble Grey Suede	D45		●
Pebble Grey W/Cocoa Glaze Suede	E40		●
Pebble Grey W/Cocoa Glaze	B84		●
Peppercorn	PC	❖	❖
Peppercorn Suede	D53	●	●
Praline	PR	❖	❖
Praline Suede	C78	●	●
Praline W/Onyx Glaze Suede	E16		●
Praline W/Onyx Glaze	A45		●
Saddle	B81	❖	❖
Saddle Suede	C12	●	●
Slate	B64	❖	❖
Slate Suede	C72	●	●
Sunset	SU	❖	
Sunset Suede	D49	●	
Surfside	E65		●
Surfside Suede	E66		●
Unfinished	UF	❖	❖
Vintage Biscotti	VS	●	
Vintage Biscotti Suede	E41	●	
Vintage Canvas	VC	●	
Vintage Canvas Suede	E42	●	
Vintage Chai	C35	●	
Vintage Chai Suede	E43	●	
Vintage Dove White	VD	●	
Vintage Dove White Suede	E44	●	
Vintage Greyloft	B67	●	
Vintage Greyloft Suede	E45	●	
Vintage Linen	D91	●	
Vintage Linen Suede	E46	●	
Vintage Midnight	B71	●	
Vintage Midnight Suede	E47	●	
Vintage Moonshine	D99	●	
Vintage Moonshine Suede	E48	●	
Vintage Mushroom	A13	●	
Vintage Mushroom Suede	E49	●	
Vintage Onyx	VO	●	
Vintage Onyx Suede	E50	●	
Vintage Pebble Grey	B86	●	
Vintage Pebble Grey Suede	E51	●	

Shepparton

Full Overlay

AH6C1 Cherry Price Column I

AH6M1 Maple Price Column G

Scan to view all Shepparton doors

Full Overlay

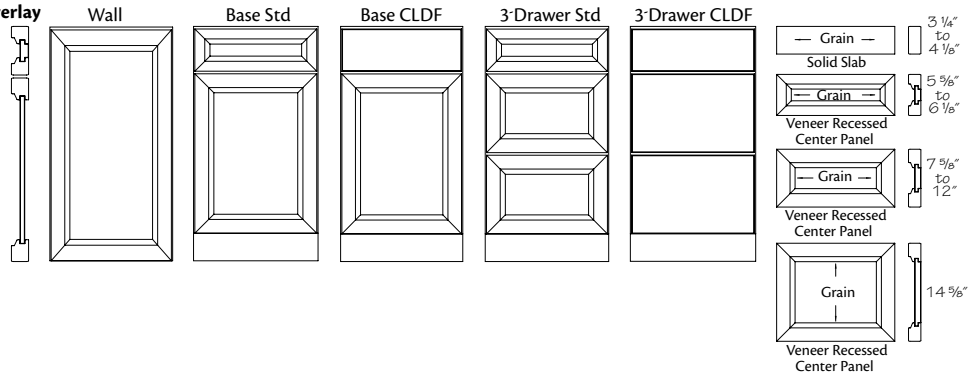

- Solid wood mitered door frame with 2 3/4" stiles and rails
- Square veneer recessed panel on wall and base doors
- Drawer front varies depending on height
- Classic Drawer Front (CLDF) option available
- Concealed hinge
- Decorative hardware is required
- ***Note***: When CLDF option is applied, all drawer fronts will be slab

Decorative Doors & Inserts Available

Aluminum Frame Glass
- Fresco Brushed Aluminum
- Vetro Brushed Aluminum

Camed Glass
- Chateau
- Classic Camed Insert
- Palisades
- Penrose
- Victorian
- Yorkshire

Classic Glass
- Bistro
- Prepared for Glass
- Prism
- Shadow

Etched Glass
- Crossroads
- Lisbon
- Modern Frosted Insert
- Prairie
- Satina

Layered Glass
- Antiquity
- Mirage
- Silk
- Wintersday

Mullion Doors
- Ambry
- Castlegate
- Evansville
- Hewitt
- Showcase Mullion
- Traditional Mullion

Specialty Inserts
- Chalkboard Insert
- Leather Insert

Textured Glass
- Cascade
- Dolace
- Modern Textured Insert
- Moire
- Ravenna
- Styx
- Vauxhall

Shepparton Finishes

❖ *Available as Standard*
● *Premium Upcharge*

		Shepparton Cherry AH6C1	Shepparton Maple AH6M1
Autumn Blush	AB	❖	
Autumn Blush Suede	C21	●	
Autumn Blush W/Onyx Glaze Suede	E10	●	
Autumn Blush W/Onyx Glaze	A56	●	
Baltic	D78	❖	
Baltic Suede	D80	●	
Biscotti	BO		●
Biscotti Suede	D36		●
Biscotti W/Cinder Glaze Suede	E24		●
Biscotti W/Cocoa Glaze Suede	E25		●
Biscotti W/Cinder Glaze	B91		●
Biscotti W/Cocoa Glaze	IG		●
Bonsai	E69		●
Bonsai Suede	E70		●
Burmese	E67		●
Burmese Suede	E68		●
Cabernet	CT	❖	❖
Cabernet Suede	C80	●	●
Cabernet W/Onyx Glaze Suede	E11	●	
Cabernet W/Onyx Glaze	A58	●	
Cannon Grey	D81	❖	
Cannon Grey Suede	D83	●	
Canvas	CV		●
Canvas Suede	D37		●
Canvas W/Cinder Glaze Suede	E26		●
Canvas W/Cocoa Glaze Suede	E27		●
Canvas W/Cinder Glaze	B90		●
Canvas W/Cocoa Glaze	VG		●
Chai	C29		●
Chai Suede	D39		●
Chai W/Cinder Glaze Suede	E28		●
Chai W/Cocoa Glaze Suede	E29		●
Chai W/Cinder Glaze	C32		●
Chai W/Cocoa Glaze	C30		●
Chestnut	CN		❖
Chestnut Suede	C23		●
Chestnut W/Onyx Glaze Suede	E12		●
Chestnut W/Onyx Glaze	A54		●
Chocolate	CC	❖	❖
Chocolate Suede	D87	●	●
Chocolate W/Ebony Glaze	EG	●	
Chocolate W/Ebony Glaze Suede	E13	●	
Cinnamon	CA	❖	❖
Cinnamon Suede	C74	●	●
Cinnamon W/Onyx Glaze Suede	E14	●	●
Cinnamon W/Onyx Glaze	A48	●	●
Cognac	CO	❖	❖
Cognac Suede	D85	●	●
Dove White	DW		●
Dove White Suede	D40		●
Dove White W/Cinder Glaze Suede	E30		●
Dove White W/Cocoa Glaze Suede	E31		●
Dove White W/Cinder Glaze	B89		●
Dove White W/Cocoa Glaze	A15		●
Ginger	C88	❖	❖
Ginger Suede	C19	●	●
Ginger W/Sable Glaze Suede	E15	●	●
Ginger W/Sable Glaze	C11	●	●
Greyloft	B65		●
Greyloft Suede	D41		●
Greyloft W/Sable Glaze Suede	E32		●
Greyloft W/Sable Glaze	B66		●
Hazel	C16	❖	
Hazel Suede	C17	●	
Honey Spice	HS	❖	❖
Honey Spice Suede	D88	●	●
Husk	B82	❖	
Husk Suede	C13	●	
Kaffé	KA	❖	❖
Kaffé Suede	C27	●	●
Lagoon	E63		●
Lagoon Suede	E64		●
Linen	D90		●
Linen Suede	D93		●
Linen W/Cinder Glaze Suede	E33		●
Linen W/Cocoa Glaze Suede	E34		●
Linen W/Cinder Glaze	D96		●
Linen W/Cocoa Glaze	D94		●
Midnight	B69		●
Midnight Suede	D42		●
Midnight W/Onyx Glaze Suede	E35		●
Midnight W/Onyx Glaze	B70		●
Molasses	E58	❖	❖
Molasses Suede	E59	●	●
Moonshine	D98		●
Moonshine Suede	E02		●
Moonshine W/Cinder Glaze Suede	E36		●
Moonshine W/Cocoa Glaze Suede	E37		●
Moonshine W/Cinder Glaze	E04		●
Moonshine W/Cocoa Glaze	E03		●
Mushroom	A11		●
Mushroom Suede	D43		●
Mushroom W/Cinder Glaze Suede	E38		●
Mushroom W/Cocoa Glaze Suede	E39		●
Mushroom W/Cinder Glaze	B92		●
Mushroom W/Cocoa Glaze	A12		●
Natural	NA	❖	❖
Natural Suede	D89	●	●
Onyx	A21		●
Onyx Suede	D44		●
Pebble Grey	B83		●
Pebble Grey Suede	D45		●
Pebble Grey W/Cocoa Glaze Suede	E40		●
Pebble Grey W/Cocoa Glaze	B84		●
Peppercorn	PC	❖	❖
Peppercorn Suede	D53	●	●
Praline	PR	❖	❖
Praline Suede	C78	●	●
Praline W/Onyx Glaze Suede	E16		●
Praline W/Onyx Glaze	A45		●
Saddle	B81	❖	❖
Saddle Suede	C12	●	●
Slate	B64	❖	❖
Slate Suede	C72	●	●
Sunset	SU	❖	
Sunset Suede	D49	●	
Surfside	E65		●
Surfside Suede	E66		●
Unfinished	UF	❖	❖

Sheridan

Full Overlay

SHD1 White Thermofoil Price Column D

Scan to view all Sheridan doors

Full Overlay

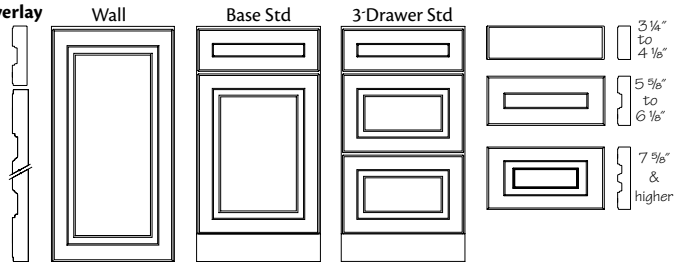

- Thermofoil on 3/4" thick MDF substrate
- Square design has raised center panel on wall and base doors
- Drawer front varies depending on height
- Concealed hinge
- Decorative hardware is required

Remember, all Foil and Thermofoil door styles will have a natural birch interior and a white or cream Viraguard exterior. Also, the underside of the cabinets are natural birch. To cover the underside, order an Under Cabinet Panel.

Decorative Doors & Inserts Available

Aluminum Frame Glass
- Fresco Brushed Aluminum
- Vetro Brushed Aluminum

Camed Glass
- Chateau
- Classic Camed Insert
- Palisades
- Penrose
- Victorian
- Yorkshire

Classic Glass
- Bistro
- Prepared for Glass
- Prism
- Shadow

Etched Glass
- Crossroads
- Lisbon
- Modern Frosted Insert
- Prairie
- Satina

Layered Glass
- Antiquity
- Mirage
- Silk
- Wintersday

Mullion Doors
- Traditional Mullion

Specialty Inserts
- Chalkboard Insert
- Leather Insert

Textured Glass
- Cascade
- Dolace
- Modern Textured Insert
- Moire
- Ravenna
- Styx
- Vauxhall

Sheridan Finishes

❖ *Available as Standard*
● *Premium Upcharge*

		Sheridan
		SHD1
White	WH	❖

Sydney

Full Overlay

SCS1	Cream Thermofoil	Price Column B
SWS1	White Thermofoil	Price Column B

Scan to view all Sydney doors

Full Overlay

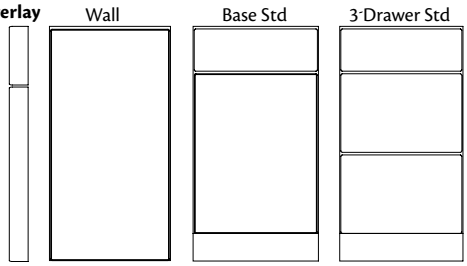

- Thermofoil on 3/4" thick MDF substrate
- Slab with square edges on wall & base doors
- Slab drawer front
- Concealed hinge
- Decorative hardware is required

Remember, all Foil and Thermofoil door styles will have a natural birch interior and a white or cream Viraguard exterior. Also, the underside of the cabinets are natural birch. To cover the underside, order an Under Cabinet Panel.

Decorative Doors & Inserts Available

Aluminum Frame Glass
- Fresco Brushed Aluminum
- Vetro Brushed Aluminum

Camed Glass
- Chateau
- Classic Camed Insert
- Palisades
- Penrose
- Victorian
- Yorkshire

Classic Glass
- Bistro
- Prepared for Glass
- Prism
- Shadow

Etched Glass
- Crossroads
- Lisbon
- Modern Frosted Insert
- Prairie
- Satina

Layered Glass
- Antiquity
- Mirage
- Silk
- Wintersday

Mullion Doors
- Traditional Mullion

Specialty Inserts
- Chalkboard Insert
- Leather Insert

Textured Glass
- Cascade
- Dolace
- Modern Textured Insert
- Moire
- Ravenna
- Styx
- Vauxhall

Sydney Finishes

❖ *Available as Standard*
● *Premium Upcharge*

		SCS1 Sydney Cream	SWS1 Sydney White
Cream	CS	❖	
White	WH		❖

Tennyson

Scan to view all Tennyson doors

Full Overlay

AA0C1 Cherry Price Column P

AA0M1 Maple Price Column O

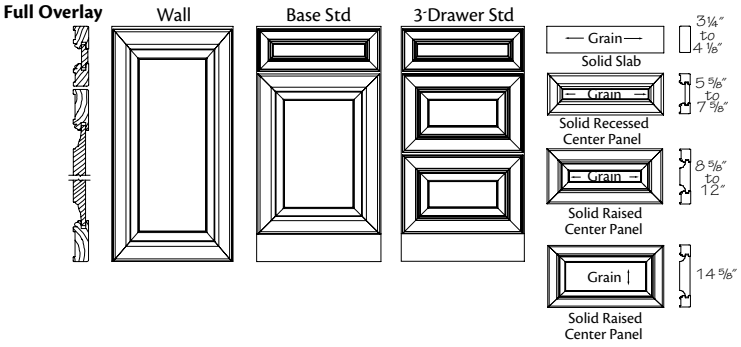

- Solid wood mitered door frame with 2 5/8" stiles and rails
- Square solid raised panel on wall and base doors
- Drawer front varies depending on height
- Concealed hinge
- Decorative hardware is required

Decorative Doors & Inserts Available

Aluminum Frame Glass
- Fresco Brushed Aluminum
- Vetro Brushed Aluminum

Camed Glass
- Chateau
- Classic Camed Insert
- Palisades
- Penrose
- Victorian
- Yorkshire

Classic Glass
- Bistro
- Prepared for Glass
- Prism
- Shadow

Etched Glass
- Crossroads
- Lisbon
- Modern Frosted Insert
- Prairie
- Satina

Layered Glass
- Antiquity
- Mirage
- Silk
- Wintersday

Mullion Doors
- Ambry
- Castlegate
- Evansville
- Hewitt
- Showcase Mullion
- Traditional Mullion

Specialty Inserts
- Chalkboard Insert
- Leather Insert

Textured Glass
- Cascade
- Dolace
- Modern Textured Insert
- Moire
- Ravenna
- Styx
- Vauxhall

Tennyson Finishes

❖ *Available as Standard*
● *Premium Upcharge*

		Tennyson Cherry Square AA0C1	Tennyson Maple Square AA0M1
Aged Concrete	E06		●
Aged Papyrus	E05		●
Aged River Rock	E07		●
Autumn Blush	AB	❖	
Autumn Blush Suede	C21	●	
Autumn Blush W/Onyx Glaze Suede	E10	●	
Autumn Blush W/Onyx Glaze	A56	●	
Baltic	D78	❖	
Baltic Suede	D80	●	
Biscotti	BO		●
Biscotti Suede	D36		●
Biscotti W/Cinder Glaze Suede	E24		●
Biscotti W/Cocoa Glaze Suede	E25		●
Biscotti W/Cinder Glaze	B91		●
Biscotti W/Cocoa Glaze	IG		●
Bonsai	E69		●
Bonsai Suede	E70		●
Burmese	E67		●
Burmese Suede	E68		●
Burnished Autumn Blush	BA	●	
Burnished Autumn Blush Suede	E17	●	
Burnished Cabernet	BT	●	
Burnished Cabernet Suede	E18	●	
Burnished Chestnut	BH		●
Burnished Chestnut Suede	E19		●
Burnished Chocolate	BL	●	
Burnished Chocolate Suede	E20	●	
Burnished Cinnamon	A51	●	●
Burnished Cinnamon Suede	E21	●	●
Burnished Ginger	BE	●	●
Burnished Ginger Suede	E22	●	●
Burnished Praline	BP		●
Burnished Praline Suede	E23		●
Cabernet	CT	❖	❖
Cabernet Suede	C80	●	●
Cabernet W/Onyx Glaze Suede	E11	●	
Cabernet W/Onyx Glaze	A58	●	
Cannon Grey	D81	❖	
Cannon Grey Suede	D83	●	
Canvas	CV		●
Canvas Suede	D37		●
Canvas W/Cinder Glaze Suede	E26		●
Canvas W/Cocoa Glaze Suede	E27		●
Canvas W/Cinder Glaze	B90		●
Canvas W/Cocoa Glaze	VG		●
Chai	C29		●
Chai Suede	D39		●
Chai W/Cinder Glaze Suede	E28		●
Chai W/Cocoa Glaze Suede	E29		●
Chai W/Cinder Glaze	C32		●
Chai W/Cocoa Glaze	C30		●
Chestnut	CN		❖
Chestnut Suede	C23		●
Chestnut W/Onyx Glaze Suede	E12		●
Chestnut W/Onyx Glaze	A54		●
Chocolate	CC	❖	❖
Chocolate Suede	D87	●	●
Chocolate W/Ebony Glaze	EG	●	
Chocolate W/Ebony Glaze Suede	E13	●	
Cinnamon	CA	❖	❖
Cinnamon Suede	C74	●	●
Cinnamon W/Onyx Glaze Suede	E14	●	●
Cinnamon W/Onyx Glaze	A48	●	●
Cognac	CO	❖	❖
Cognac Suede	D85	●	●
Distressed Autumn Blush	C22	●	
Distressed Baltic	D79	●	
Distressed Cabernet	C87	●	●
Distressed Cannon Grey	D82	●	
Distressed Chestnut	C24		●
Distressed Chocolate	D86	●	●
Distressed Cinnamon	C75	●	●
Distressed Cognac	D84	●	●
Distressed Ginger	C20	●	●
Distressed Hazel	C18	●	●
Distressed Husk	C15	●	●
Distressed Kaffé	C28	●	●
Distressed Molasses	E60	●	●
Distressed Peppercorn	C86	●	●
Distressed Praline	C79	●	●
Distressed Saddle	C14	●	●
Distressed Slate	C73	●	●
Distressed Sunset	D50	●	
Dove White	DW		●
Dove White Suede	D40		●
Dove White W/Cinder Glaze Suede	E30		●
Dove White W/Cocoa Glaze Suede	E31		●
Dove White W/Cinder Glaze	B89		●
Dove White W/Cocoa Glaze	A15		●
Ginger	C88	❖	❖
Ginger Suede	C19	●	●
Ginger W/Sable Glaze Suede	E15	●	●
Ginger W/Sable Glaze	C11	●	●
Greyloft	B65		●
Greyloft Suede	D41		●
Greyloft W/Sable Glaze Suede	E32		●
Greyloft W/Sable Glaze	B66		●
Hazel	C16	❖	
Hazel Suede	C17	●	
Honey Spice	HS	❖	❖
Honey Spice Suede	D88	●	●
Husk	B82	❖	
Husk Suede	C13	●	
Kaffé	KA	❖	❖
Kaffé Suede	C27	●	●
Lagoon	E63		●
Lagoon Suede	E64		●
Linen	D90		●
Linen Suede	D93		●
Linen W/Cinder Glaze Suede	E33		●
Linen W/Cocoa Glaze Suede	E34		●
Linen W/Cinder Glaze	D96		●
Linen W/Cocoa Glaze	D94		●
Midnight	B69		●
Midnight Suede	D42		●
Midnight W/Onyx Glaze Suede	E35		●
Midnight W/Onyx Glaze	B70		●
Molasses	E58	❖	❖
Molasses Suede	E59	●	●
Moonshine	D98		●
Moonshine Suede	E02		●
Moonshine W/Cinder Glaze Suede	E36		●
Moonshine W/Cocoa Glaze Suede	E37		●
Moonshine W/Cinder Glaze	E04		●
Moonshine W/Cocoa Glaze	E03		●
Mushroom	A11		●
Mushroom Suede	D43		●
Mushroom W/Cinder Glaze Suede	E38		●
Mushroom W/Cocoa Glaze Suede	E39		●
Mushroom W/Cinder Glaze	B92		●
Mushroom W/Cocoa Glaze	A12		●
Natural	NA	❖	❖
Natural Suede	D89	●	●
Onyx	A21		●
Onyx Suede	D44		●
Pebble Grey	B83		●
Pebble Grey Suede	D45		●
Pebble Grey W/Cocoa Glaze Suede	E40		●
Pebble Grey W/Cocoa Glaze	B84		●
Peppercorn	PC	❖	❖
Peppercorn Suede	D53	●	●
Praline	PR	❖	❖
Praline Suede	C78	●	●
Praline W/Onyx Glaze Suede	E16		●
Praline W/Onyx Glaze	A45		●
Saddle	B81	❖	❖
Saddle Suede	C12	●	●
Slate	B64	❖	❖
Slate Suede	C72	●	●
Sunset	SU	❖	
Sunset Suede	D49	●	
Surfside	E65		●
Surfside Suede	E66		●
Unfinished	UF	❖	❖
Vintage Biscotti	VS	●	
Vintage Biscotti Suede	E41	●	
Vintage Canvas	VC	●	
Vintage Canvas Suede	E42	●	
Vintage Chai	C35	●	
Vintage Chai Suede	E43	●	
Vintage Dove White	VD	●	
Vintage Dove White Suede	E44	●	
Vintage Greyloft	B67	●	
Vintage Greyloft Suede	E45	●	
Vintage Linen	D91	●	
Vintage Linen Suede	E46	●	
Vintage Midnight	B71	●	
Vintage Midnight Suede	E47	●	
Vintage Moonshine	D99	●	
Vintage Moonshine Suede	E48	●	
Vintage Mushroom	A13	●	
Vintage Mushroom Suede	E49	●	
Vintage Onyx	VO	●	
Vintage Onyx Suede	E50	●	
Vintage Pebble Grey	B86	●	
Vintage Pebble Grey Suede	E51	●	

New Trumbull

Scan to view all Trumbull doors

Full Overlay

AJ0C1	Cherry	Price Column K
AJ0M1	Maple	Price Column I
AJ0O1	Quartersawn Oak	Price Column G
AJ0A1	Rustic Alder	Price Column I

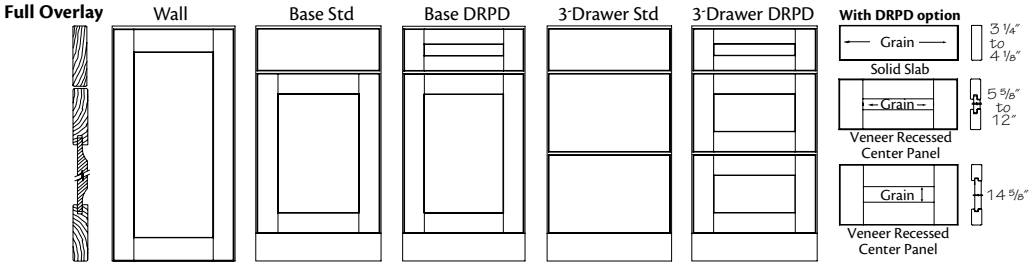

- Solid wood door frame with 3″ stiles and rails
- Square veneer recessed panel on wall and base doors
- Slab drawer front
- Deluxe Recessed Panel Drawer (DRPD) front available
- Concealed hinge
- Decorative hardware is required

Decorative Doors & Inserts Available

Aluminum Frame Glass
- Fresco Brushed Aluminum
- Vetro Brushed Aluminum

Camed Glass
- Chateau
- Classic Camed Insert
- Palisades
- Penrose
- Victorian
- Yorkshire

Classic Glass
- Bistro
- Prepared for Glass
- Prism
- Shadow

Etched Glass
- Crossroads
- Lisbon
- Modern Frosted Insert
- Prairie
- Satina

Layered Glass
- Antiquity
- Mirage
- Silk
- Wintersday

Mullion Doors
- Ambry ★
- Castlegate ★
- Evansville ★
- Hewitt ★
- Showcase Mullion ★
- Traditional Mullion★

Specialty Inserts
- Chalkboard Insert
- Leather Insert

Textured Glass
- Cascade
- Dolace
- Modern Textured Insert
- Moire
- Ravenna
- Styx
- Vauxhall

★ ***Not*** available in Rustic door styles

Trumbull Finishes

❖ *Available as Standard*
● *Premium Upcharge*

		AJ0C1	**AJ0M1**	AJ0O1	AJ0A1
		Trumbull Cherry	Trumbull Maple	Trumbull QS Oak	Trumbull Rustic Alder
Autumn Blush	AB	❖		❖	❖
Autumn Blush Suede	C21	●		●	●
Autumn Blush W/Onyx Glaze Suede	E10	●		●	●
Autumn Blush W/Onyx Glaze	A56	●		●	●
Baltic	D78	❖		❖	❖
Baltic Suede	D80	●		●	●
Biscotti	BO		●		
Biscotti Suede	D36		●		
Biscotti W/Cinder Glaze Suede	E24		●		
Biscotti W/Cocoa Glaze Suede	E25		●		
Biscotti W/Cinder Glaze	B91		●		
Biscotti W/Cocoa Glaze	IG		●		
Bonsai	E69		●		
Bonsai Suede	E70		●		
Burmese	E67		●		
Burmese Suede	E68		●		
Cabernet	CT	❖	❖		❖
Cabernet Suede	C80	●	●		●
Cabernet W/Onyx Glaze Suede	E11	●			●
Cabernet W/Onyx Glaze	A58	●			●
Cannon Grey	D81	❖		❖	❖
Cannon Grey Suede	D83	●		●	●
Canvas	CV		●		
Canvas Suede	D37		●		
Canvas W/Cinder Glaze Suede	E26		●		
Canvas W/Cocoa Glaze Suede	E27		●		
Canvas W/Cinder Glaze	B90		●		
Canvas W/Cocoa Glaze	VG		●		
Chai	C29		●		
Chai Suede	D39		●		
Chai W/Cinder Glaze Suede	E28		●		
Chai W/Cocoa Glaze Suede	E29		●		
Chai W/Cinder Glaze	C32		●		
Chai W/Cocoa Glaze	C30		●		
Chestnut	CN		❖		
Chestnut Suede	C23		●		
Chestnut W/Onyx Glaze Suede	E12		●		
Chestnut W/Onyx Glaze	A54		●		
Chocolate	CC	❖	❖		❖
Chocolate Suede	D87	●	●		●
Chocolate W/Ebony Glaze	EG	●			●
Chocolate W/Ebony Glaze Suede	E13	●			●
Cinnamon	CA	❖	❖		❖
Cinnamon Suede	C74	●	●		●
Cinnamon W/Onyx Glaze Suede	E14	●	●		●
Cinnamon W/Onyx Glaze	A48	●	●		●
Cognac	CO	❖	❖	❖	❖
Cognac Suede	D85	●	●	●	●
Dove White	DW		●		
Dove White Suede	D40		●		
Dove White W/Cinder Glaze Suede	E30		●		
Dove White W/Cocoa Glaze Suede	E31		●		
Dove White W/Cinder Glaze	B89		●		
Dove White W/Cocoa Glaze	A15		●		
Fawn	FN			❖	
Fawn Suede	D51			●	
Ginger	C88	❖	❖	❖	❖
Ginger Suede	C19	●	●	●	●
Ginger W/Sable Glaze Suede	E15	●	●	●	●
Ginger W/Sable Glaze	C11	●	●	●	●
Greyloft	B65		●		
Greyloft Suede	D41		●		
Greyloft W/Sable Glaze Suede	E32		●		
Greyloft W/Sable Glaze	B66		●		
Hazel	C16	❖		❖	❖
Hazel Suede	C17	●		●	●

		AJ0C1	**AJ0M1**	AJ0O1	AJ0A1
		Trumbull Cherry	Trumbull Maple	Trumbull QS Oak	Trumbull Rustic Alder
Honey Spice	HS	❖	❖	❖	❖
Honey Spice Suede	D88	●	●	●	●
Husk	B82	❖		❖	❖
Husk Suede	C13	●		●	●
Kaffé	KA	❖	❖	❖	❖
Kaffé Suede	C27	●	●	●	●
Lagoon	E63		●		
Lagoon Suede	E64		●		
Linen	D90		●		
Linen Suede	D93		●		
Linen W/Cinder Glaze Suede	E33		●		
Linen W/Cocoa Glaze Suede	E34		●		
Linen W/Cinder Glaze	D96		●		
Linen W/Cocoa Glaze	D94		●		
Midnight	B69		●		
Midnight Suede	D42		●		
Midnight W/Onyx Glaze Suede	E35		●		
Midnight W/Onyx Glaze	B70		●		
Molasses	E58	❖	❖	❖	❖
Molasses Suede	E59	●	●	●	●
Moonshine	D98		●		
Moonshine Suede	E02		●		
Moonshine W/Cinder Glaze Suede	E36		●		
Moonshine W/Cocoa Glaze Suede	E37		●		
Moonshine W/Cinder Glaze	E04		●		
Moonshine W/Cocoa Glaze	E03		●		
Mushroom	A11		●		
Mushroom Suede	D43		●		
Mushroom W/Cinder Glaze Suede	E38		●		
Mushroom W/Cocoa Glaze Suede	E39		●		
Mushroom W/Cinder Glaze	B92		●		
Mushroom W/Cocoa Glaze	A12		●		
Natural	NA	❖	❖	❖	❖
Natural Suede	D89	●	●	●	●
Onyx	A21		●	●	
Onyx Suede	D44		●	●	
Pebble Grey	B83		●		
Pebble Grey Suede	D45		●		
Pebble Grey W/Cocoa Glaze Suede	E40		●		
Pebble Grey W/Cocoa Glaze	B84		●		
Peppercorn	PC	❖	❖	❖	❖
Peppercorn Suede	D53	●	●	●	●
Praline	PR	❖	❖	❖	❖
Praline Suede	C78	●	●	●	●
Praline W/Onyx Glaze Suede	E16		●		
Praline W/Onyx Glaze	A45		●		
Saddle	B81	❖	❖	❖	❖
Saddle Suede	C12	●	●	●	●
Slate	B64	❖	❖	❖	
Slate Suede	C72	●	●	●	
Sunset	SU	❖			❖
Sunset Suede	D49	●			●
Surfside	E65		●		
Surfside Suede	E66		●		
Unfinished	UF	❖	❖	❖	❖

Vanderbilt

Scan to view all Vanderbilt doors

Full Overlay

AA1C1 Cherry — Price Column R

AA1M1 Maple — Price Column Q

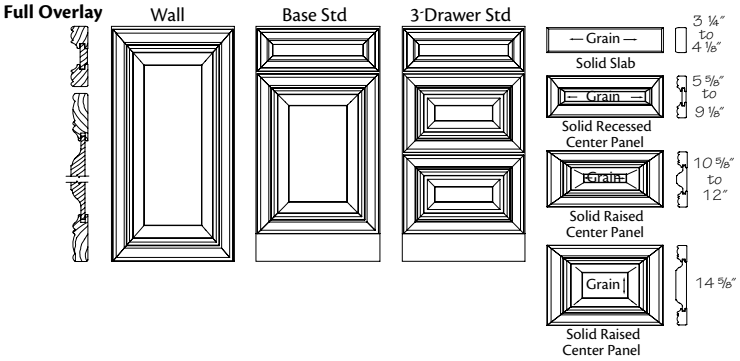

- Solid wood mitered door frame with 3″ stiles and rails
- Square solid raised panel on wall and base doors
- Drawer front varies depending on height
- Concealed hinge
- Decorative hardware is required

Decorative Doors & Inserts Available

Aluminum Frame Glass
- Fresco Brushed Aluminum
- Vetro Brushed Aluminum

Camed Glass
- Chateau
- Classic Camed Insert
- Palisades
- Penrose
- Victorian
- Yorkshire

Classic Glass
- Bistro
- Prepared for Glass
- Prism
- Shadow

Etched Glass
- Crossroads
- Lisbon
- Modern Frosted Insert
- Prairie
- Satina

Layered Glass
- Antiquity
- Mirage
- Silk
- Wintersday

Mullion Doors
- Castlegate
- Evansville
- Hewitt
- Showcase Mullion
- Traditional Mullion

Specialty Inserts
- Chalkboard Insert
- Leather Insert

Textured Glass
- Cascade
- Dolace
- Modern Textured Insert
- Moire
- Ravenna
- Styx
- Vauxhall

Vanderbilt Finishes

❖ *Available as Standard*
● *Premium Upcharge*

		AA1C1 Vanderbilt Cherry Square	AA1M1 Vanderbilt Maple Square
Aged Concrete	E06		●
Aged Papyrus	E05		●
Aged River Rock	E07		●
Autumn Blush	AB	❖	
Autumn Blush Suede	C21	●	
Autumn Blush W/Onyx Glaze Suede	E10	●	
Autumn Blush W/Onyx Glaze	A56	●	
Baltic	D78	❖	
Baltic Suede	D80	●	
Biscotti	BO		●
Biscotti Suede	D36		●
Biscotti W/Cinder Glaze Suede	E24		●
Biscotti W/Cocoa Glaze Suede	E25		●
Biscotti W/Cinder Glaze	B91		●
Biscotti W/Cocoa Glaze	IG		●
Bonsai	E69		●
Bonsai Suede	E70		●
Burmese	E67		●
Burmese Suede	E68		●
Burnished Autumn Blush	BA	●	
Burnished Autumn Blush Suede	E17	●	
Burnished Cabernet	BT	●	
Burnished Cabernet Suede	E18	●	
Burnished Chestnut	BH		●
Burnished Chestnut Suede	E19		●
Burnished Chocolate	BL	●	
Burnished Chocolate Suede	E20	●	
Burnished Cinnamon	A51	●	●
Burnished Cinnamon Suede	E21	●	●
Burnished Ginger	BE	●	●
Burnished Ginger Suede	E22	●	●
Burnished Praline	BP		●
Burnished Praline Suede	E23		●
Cabernet	CT	❖	❖
Cabernet Suede	C80	●	●
Cabernet W/Onyx Glaze Suede	E11	●	
Cabernet W/Onyx Glaze	A58	●	
Cannon Grey	D81	❖	
Cannon Grey Suede	D83	●	
Canvas	CV		●
Canvas Suede	D37		●
Canvas W/Cinder Glaze Suede	E26		●
Canvas W/Cocoa Glaze Suede	E27		●
Canvas W/Cinder Glaze	B90		●
Canvas W/Cocoa Glaze	VG		●
Chai	C29		●
Chai Suede	D39		●
Chai W/Cinder Glaze Suede	E28		●
Chai W/Cocoa Glaze Suede	E29		●
Chai W/Cinder Glaze	C32		●
Chai W/Cocoa Glaze	C30		●
Chestnut	CN		❖
Chestnut Suede	C23		●
Chestnut W/Onyx Glaze Suede	E12		●
Chestnut W/Onyx Glaze	A54		●
Chocolate	CC	❖	❖
Chocolate Suede	D87	●	●
Chocolate W/Ebony Glaze	EG	●	
Chocolate W/Ebony Glaze Suede	E13	●	
Cinnamon	CA	❖	❖
Cinnamon Suede	C74	●	●
Cinnamon W/Onyx Glaze Suede	E14	●	●
Cinnamon W/Onyx Glaze	A48	●	●
Cognac	CO	❖	❖
Cognac Suede	D85	●	●
Distressed Autumn Blush	C22	●	
Distressed Baltic	D79	●	
Distressed Cabernet	C87	●	●
Distressed Cannon Grey	D82	●	
Distressed Chestnut	C24		●
Distressed Chocolate	D86	●	●
Distressed Cinnamon	C75	●	●
Distressed Cognac	D84	●	●
Distressed Ginger	C20	●	●
Distressed Hazel	C18	●	●
Distressed Husk	C15	●	●
Distressed Kaffé	C28	●	●
Distressed Molasses	E60	●	●
Distressed Peppercorn	C86	●	●
Distressed Praline	C79	●	●
Distressed Saddle	C14	●	●
Distressed Slate	C73	●	●
Distressed Sunset	D50	●	
Dove White	DW		●
Dove White Suede	D40		●
Dove White W/Cinder Glaze Suede	E30		●
Dove White W/Cocoa Glaze Suede	E31		●
Dove White W/Cinder Glaze	B89		●
Dove White W/Cocoa Glaze	A15		●
Ginger	C88	❖	❖
Ginger Suede	C19	●	●
Ginger W/Sable Glaze Suede	E15	●	●
Ginger W/Sable Glaze	C11	●	●
Greyloft	B65		●
Greyloft Suede	D41		●
Greyloft W/Sable Glaze Suede	E32		●
Greyloft W/Sable Glaze	B66		●
Hazel	C16	❖	
Hazel Suede	C17	●	
Honey Spice	HS	❖	❖
Honey Spice Suede	D88	●	●
Husk	B82	❖	
Husk Suede	C13	●	
Kaffé	KA	❖	❖
Kaffé Suede	C27	●	●
Lagoon	E63		●
Lagoon Suede	E64		●
Linen	D90		●
Linen Suede	D93		●
Linen W/Cinder Glaze Suede	E33		●
Linen W/Cocoa Glaze Suede	E34		●
Linen W/Cinder Glaze	D96		●
Linen W/Cocoa Glaze	D94		●
Midnight	B69		●
Midnight Suede	D42		●
Midnight W/Onyx Glaze Suede	E35		●
Midnight W/Onyx Glaze	B70		●
Molasses	E58	❖	❖
Molasses Suede	E59	●	●
Moonshine	D98		●
Moonshine Suede	E02		●
Moonshine W/Cinder Glaze Suede	E36		●
Moonshine W/Cocoa Glaze Suede	E37		●
Moonshine W/Cinder Glaze	E04		●
Moonshine W/Cocoa Glaze	E03		●
Mushroom	A11		●
Mushroom Suede	D43		●
Mushroom W/Cinder Glaze Suede	E38		●
Mushroom W/Cocoa Glaze Suede	E39		●
Mushroom W/Cinder Glaze	B92		●
Mushroom W/Cocoa Glaze	A12		●
Natural	NA	❖	❖
Natural Suede	D89	●	●
Onyx	A21		●
Onyx Suede	D44		●
Pebble Grey	B83		●
Pebble Grey Suede	D45		●
Pebble Grey W/Cocoa Glaze Suede	E40		●
Pebble Grey W/Cocoa Glaze	B84		●
Peppercorn	PC	❖	❖
Peppercorn Suede	D53	●	●
Praline	PR	❖	❖
Praline Suede	C78	●	●
Praline W/Onyx Glaze Suede	E16		●
Praline W/Onyx Glaze	A45		●
Saddle	B81	❖	❖
Saddle Suede	C12	●	●
Slate	B64	❖	❖
Slate Suede	C72	●	●
Sunset	SU	❖	
Sunset Suede	D49	●	
Surfside	E65		●
Surfside Suede	E66		●
Unfinished	UF	❖	❖
Vintage Biscotti	VS	●	
Vintage Biscotti Suede	E41	●	
Vintage Canvas	VC	●	
Vintage Canvas Suede	E42	●	
Vintage Chai	C35	●	
Vintage Chai Suede	E43	●	
Vintage Dove White	VD	●	
Vintage Dove White Suede	E44	●	
Vintage Greyloft	B67	●	
Vintage Greyloft Suede	E45	●	
Vintage Linen	D91	●	
Vintage Linen Suede	E46	●	
Vintage Midnight	B71	●	
Vintage Midnight Suede	E47	●	
Vintage Moonshine	D99	●	
Vintage Moonshine Suede	E48	●	
Vintage Mushroom	A13	●	
Vintage Mushroom Suede	E49	●	
Vintage Onyx	VO	●	
Vintage Onyx Suede	E50	●	
Vintage Pebble Grey	B86	●	
Vintage Pebble Grey Suede	E51	●	

Finish Terminology

- **End Grain**
  End grain surfaces and softer areas of the wood may accept more stain and often appear darker than other surfaces. This is a natural reaction when finishing wood products and potential variances ***cannot*** be controlled
- **Joint Lines**
  Since wood is in a constant state of expansion and contraction, visible lines are normal at the joints on the cabinet face frames and doors. This does ***not*** weaken the finish or the strength of the joint
- **Telegraphing**
  Show through or "telegraphing" of wood characteristics may happen when paint is applied to any specie of natural wood. These characteristics, such as open grain, pin holes, knots and mineral streaks, may be visible through the paint. Telegraphing may happen on doors, face frames, moldings, decorative end panels or other decorative enhancements made of natural wood. Please consider this when selling any of our finishes that feature paint as the base technique, including paint with glaze and vintage techniques

Note: Individual veneer doors vary in absorption of finishes and glaze hang-up. Also, veneer door styles, which are usually simple door designs, may ***not*** contain as much glaze hang-up as ornate door designs. Therefore, KraftMaid® recommends that a sample veneer door be viewed in the desired finish before placing a full kitchen order

Note: Based on independent testing, discoloration will occur to doors, drawers and cabinet parts after prolonged exposure to tobacco smoke. This is especially noticeable on white and other lighter finishes. However, KraftMaid® Cabinetry does ***not*** warranty any of its finishes against discoloration due to exposure to smoke

Warping, Cracking & Proper Humidity

As a natural characteristic, all wood products contain moisture. Changes in temperature and humidity affect the moisture content in wood, which causes wood to expand or contract. Over time, this expansion or contraction can cause warping and joint cracks to occur, potentially causing permanent deformations, in wood cabinetry.

To help prevent excessive movement in your wood cabinetry, we recommend maintaining a controlled environment of 70 to 75 degrees Fahrenheit and 30% to 50% humidity in the areas where your cabinetry is stored or installed. Environmental conditions ***cannot*** be controlled by Masco Cabinetry and the effects of the movement in wood is ***not*** considered to be a manufacturing defect and will ***not*** be considered a reason for replacement.

See the doors section of this book for door specie information and descriptions

Note: Wood products, including cabinet doors and face frames, are typically affected by environmental conditions. Color variation over time, as well as normal movement due to wood's expansion and contraction is part of the natural beauty of wood. This normal movement may cause hairline cracks in the finish surface at the joints and is considered a normal characteristic of semi-opaque or painted finishes. This will ***not*** be considered a reason for product replacement

Examples of ways to finish ends:

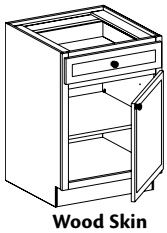
Wood Skin

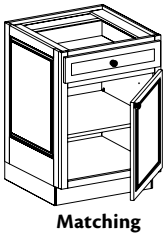
Matching End Panel

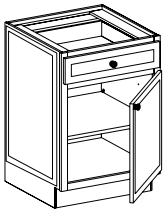
Wood Skin with Replacement Door

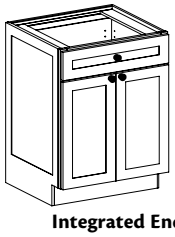
Integrated End

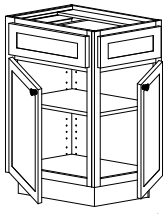
Operational End

Standard Thermofoil Finishes

- **Cream**
  Solid off-white color Thermofoil with a satin finish
- **CS** Cream

- **White**
  Solid white color Thermofoil with a satin finish
- **WH** White

Wood-Grain Foil Finishes

- **Cannon Grey**
  A medium grey Thermofoil with a wood-grain finish
- **D81O**

- **Dove White**
  A white Thermofoil with a wood-grain finish
- **WH**

High-Gloss Foil Finishes

- **Chai**
  A soft, neutral, light taupe color Thermofoil with a high-gloss finish
- **D57L**

- **Dove White**
  White color Thermofoil with a high-gloss finish
- **D58L**

- **Greyloft**
  Warm, midtone grey color Thermofoil with a high-gloss finish
- **D59L**

- **Onyx**
  Black color Thermofoil with a high-gloss finish
- **D60L**

- **Pebble Grey**
  Cool, light grey color Thermofoil with a high-gloss finish
- **D61L**

Standard Stains

- Stain Finish Process

Stained finishes truly showcase the natural beauty and characteristics inherent in each individual wood species. Based on the stain color chosen, a toner may be applied to the wood to equalize natural sap levels. The stain color is applied and hand-rubbed to ensure full and equal color coverage for doors and drawer fronts

As a final step, our oven-cured DuraKraft Plus™ topcoat is applied to provide a beautiful and durable furniture finish.

Finish availability may vary by door style. See Finish Availability Chart

- Autumn Blush

A warm, rich brown stained finish with reddish overtones

- **ABA** Alder
- **ABC** Cherry
- **ABO** Oak

- Baltic

A light grey stain with warm undertones that enhances the beauty of the wood grain

- **D78A** Alder
- **D78B** Birch
- **D78C** Cherry
- **D78O** Oak

- Cabernet

A deep, dark burgundy stained finish

- **CTA** Alder
- **CTB** Birch
- **CTC** Cherry
- **CTM** Maple

- Cannon Grey

A medium grey stain with cool undertones that enhances the beauty of the wood grain

- **D81A** Alder
- **D81B** Birch-Available on rustic door styles only
- **D81C** Cherry
- **D81M** Maple-Available on rustic door styles only
- **D81O** Oak

- Chestnut

Medium brown stained finish with reddish overtones

- **CNB** Birch
- **CNM** Maple

- Chocolate

Luscious, medium-brown stained finish

- **CCA** Alder
- **CCB** Birch
- **CCC** Cherry
- **CCM** Maple

- Cinnamon

Spicy, reddish-brown stained finish with golden overtones

- **CAA** Alder
- **CAB** Birch
- **CAC** Cherry
- **CAM** Maple

- Cognac

Medium brown stained finish with pale yellow and dark brown undertones

- **COA** Alder
- **COB** Birch
- **COC** Cherry
- **COH** Hickory
- **COM** Maple
- **COO** Oak

- Fawn

A soft nut brown stained finish

- **FNO** Oak

- Ginger

A light reddish-brown stained finish with warm undertones

- **C88A** Alder
- **C88B** Birch
- **C88C** Cherry
- **C88H** Hickory
- **C88M** Maple
- **C88O** Oak

- Hazel

A sheer, medium brown stained finish with green undertones

- **C16A** Alder
- **C16B** Birch
- **C16C** Cherry
- **C16H** Hickory
- **C16M** Maple - Available on Rustic door styles only
- **C16O** Oak

- Honey Spice

A warm golden stained finish

- **HSA** Alder
- **HSB** Birch
- **HSC** Cherry
- **HSH** Hickory
- **HSM** Maple
- **HSO** Oak

- Husk

A neutral camel stained finish with a dark patina that highlights the natural wood grain characteristics and details. Colors ranging from light tan to dark brown are qualities that can be expected in the finished product

- **B82A** Alder
- **B82B** Birch
- **B82C** Cherry
- **B82H** Hickory
- **B82M** Maple- Available on Rustic door styles only
- **B82O** Oak

- Kaffé

A warm, rich brown stained finish with deep brown undertones and black overtones

- **KAA** Alder
- **KAB** Birch
- **KAC** Cherry
- **KAH** Hickory
- **KAM** Maple
- **KAO** Oak

- Molasses

A cool, deep, grey-brown stained finish

- **E58A** Alder
- **E58B** Birch
- **E58C** Cherry
- **E58H** Hickory
- **E58M** Maple
- **E58O** Oak

Grey color coding indicates new product, size or code.

- **Natural**
  Two coats of clear, colorless DuraKraft Plus™ topcoat on unstained wood
- **NAA** Alder
- **NAB** Birch
- **NAC** Cherry
- **NAH** Hickory
- **NAM** Maple
- **NAO** Oak

- **Peppercorn**
  A dark brown stained finish with rich black overtones
- **PCA** Alder
- **PCC** Cherry
- **PCM** Maple
- **PCO** Oak

- **Praline**
  A golden stained finish with yellow overtones
- **PRA** Alder
- **PRB** Birch
- **PRC** Cherry
- **PRH** Hickory
- **PRM** Maple
- **PRO** Oak

- **Saddle**
  A cool, deep, smoky brown stained finish that is reminiscent of walnut
- **B81A** Alder
- **B81B** Birch
- **B81C** Cherry
- **B81H** Hickory
- **B81M** Maple
- **B81O** Oak

- **Slate**
  A sheer, rich grey stained finish that enhances the beauty of the wood grain
- **B64B** Birch
- **B64C** Cherry
- **B64H** Hickory
- **B64M** Maple
- **B64O** Oak

- **Sunset**
  A medium brown stained finish
- **SUA** Alder
- **SUC** Cherry
- **SUH** Hickory

- **Unfinished**
  Our cabinetry, moldings and accessories are available unfinished. If you select the unfinished option, you ***must*** order unfinished wood veneer skins, plywood construction (PE) or plywood ends (PEB) for all cabinets with exposed ends. Unfinished cabinetry will be supplied with standard Viraguard™ interior. To get unfinished wood veneer interiors, you ***must*** order each cabinet with a Matching Interior (MI) option other than Matching Interior Standard Construction–Viraguard (MIV). On cabinets that are standard MIV, you ***must*** order each cabinet with a Matching Interior option other than MIV. Order each cabinet with Furniture Plywood Ends (FPEB) or place the cabinets on an order with All Plywood Construction (APC)

  Note: Unfinished cabinets lack the protection of a finish coat and are more susceptible to damage from variations in temperature and humidity. For this reason, we do ***not*** recommend or warranty this option

  Note: If ordering unfinished cabinets and you intend to stain them, note that with certain models glass may be permanently attached with silicon. This will result in uneven color or inability to stain all surface areas. Order cabinets without glass in order to achieve even staining
- **UFA** Alder
- **UFB** Birch
- **UFC** Cherry
- **UFH** Hickory
- **UFM** Maple
- **UFO** Oak

Premium Stain w/Suede Topcoat Finishes

- Stain w/Suede Topcoat Finish Process

Stained finishes truly showcase the natural beauty and characteristics inherent in each individual wood species. Based on the stain color chosen, a toner may be applied to the wood to equalize natural sap levels. The stain color is applied and hand-rubbed to ensure full and equal color coverage for doors and drawer fronts

As a final step, a matte sheen, Suede DuraKraft Plus™ topcoat is applied that softens the overall color tone, giving a more subtle and sophisticated appearance to cabinetry.

Finish availability may vary by door style. See Finish Availability Chart

- Autumn Blush Suede

A warm, rich brown stained finish with reddish overtones with a matte topcoat that softens the color tone and wood characteristics

- **C21A** Alder
- **C21C** Cherry
- **C21O** Oak

- Baltic Suede

A light grey stain with warm undertones with a matte topcoat that softens the color tone and wood characteristics

- **D80A** Alder
- **D80B** Birch
- **D80C** Cherry
- **D80O** Oak

- Cabernet Suede

A deep, dark burgundy stained finish with a matte topcoat that softens the color tone and wood characteristics

- **C80A** Alder
- **C80B** Birch
- **C80C** Cherry
- **C80M** Maple

- Cannon Grey Suede

A medium grey stain with cool undertones with a matte topcoat that softens the color tone and wood characteristics

- **D83A** Alder
- **D83B** Birch-Available on rustic door styles only
- **D83C** Cherry
- **D83M** Maple-Available on rustic door styles only
- **D83O** Oak

- Chestnut Suede

Medium brown stained finish with a matte topcoat that softens the color tone and wood characteristics

- **C23B** Birch
- **C23M** Maple

- Chocolate Suede

Luscious, medium-brown stained finish with a matte topcoat that softens the color tone and wood characteristics

- **D87A** Alder
- **D87B** Birch
- **D87C** Cherry
- **D87M** Maple

- Cinnamon Suede

Spicy, reddish-brown stained finish with golden overtones with a matte topcoat that softens the color tone and wood characteristics

- **C74A** Alder
- **C74B** Birch
- **C74C** Cherry
- **C74M** Maple

- Cognac Suede

Medium brown stained finish with pale yellow and dark brown undertones with a matte topcoat that softens the color tone and wood characteristics

- **D85A** Alder
- **D85B** Birch
- **D85C** Cherry
- **D85H** Hickory
- **D85M** Maple
- **D85O** Oak

- Fawn Suede

A soft nut brown stained finish with a matte topcoat that softens the color tone and wood characteristics

- **D51O** Oak

- Ginger Suede

A light reddish-brown stained finish with a matte top coat that softens the color tone and wood characteristics

- **C19A** Alder
- **C19B** Birch
- **C19C** Cherry
- **C19H** Hickory
- **C19M** Maple
- **C19O** Oak

- Hazel Suede

A sheer, medium brown stained finish with green undertones with a matte topcoat that softens the color tone and wood characteristics

- **C17A** Alder
- **C17B** Birch
- **C17C** Cherry
- **C17H** Hickory
- **C17M** Maple- Available on Rustic door styles only
- **C17O** Oak

- Honey Spice Suede

A warm golden stained finish with a matte topcoat that softens the color tone and wood characteristics

- **D88A** Alder
- **D88B** Birch
- **D88C** Cherry
- **D88H** Hickory
- **D88M** Maple
- **D88O** Oak

- Husk Suede

A neutral camel stained finish with a matte topcoat that softens the color tone and wood characteristics

- **C13A** Alder
- **C13B** Birch
- **C13C** Cherry
- **C13H** Hickory
- **C13M** Maple- Available on Rustic door styles only
- **C13O** Oak

- Kaffé Suede

A warm, rich brown stained finish with deep brown undertones and black overtones with a matte topcoat that softens the color tone and wood characteristics

- **C27A** Alder
- **C27B** Birch
- **C27C** Cherry
- **C27H** Hickory
- **C27M** Maple
- **C27O** Oak

- **Molasses Suede**

  A cool, deep, grey-brown stained finish with a matte topcoat that softens the color tone and wood characteristics

- **E59A** Alder
- **E59B** Birch
- **E59C** Cherry
- **E59H** Hickory
- **E59M** Maple
- **E59O** Oak

- **Natural Suede**

  Two coats of clear, matte, colorless DuraKraft Plus™ topcoat that softens the wood characteristics

- **D89A** Alder
- **D89B** Birch
- **D89C** Cherry
- **D89H** Hickory
- **D89M** Maple
- **D89O** Oak

- **Peppercorn Suede**

  A dark brown stained finish with rich black overtones with a matte topcoat that softens the color tone and wood characteristics

- **D53A** Alder
- **D53C** Cherry
- **D53M** Maple
- **D53O** Oak

- **Praline Suede**

  A golden stained finish with yellow overtones with a matte topcoat that softens the color tone and wood characteristics

- **C78A** Alder
- **C78B** Birch
- **C78C** Cherry
- **C78H** Hickory
- **C78M** Maple
- **C78O** Oak

- **Saddle Suede**

  A cool, deep, smoky brown stained finish with a matte top coat that softens the color tone and wood characteristics

- **C12A** Alder
- **C12B** Birch
- **C12C** Cherry
- **C12H** Hickory
- **C12M** Maple
- **C12O** Oak

- **Slate Suede**

  A sheer, rich grey stained finish with a matte topcoat that softens the color tone and wood characteristics

- **C72B** Birch
- **C72C** Cherry
- **C72H** Hickory
- **C72M** Maple
- **C72O** Oak

- **Sunset Suede**

  A medium brown stained finish with a matte topcoat that softens the color tone and wood characteristics

- **D49A** Alder
- **D49C** Cherry
- **D49H** Hickory

Grey color coding indicates new product, size or code.

Premium Stain w/Glaze Finishes

- **Stain w/Glaze Finish Process**

Glazed finishes add richness and warmth to wood surfaces.

The base stain or paint finish is applied, followed by the application of a glaze finish to the entire door or drawer front to add richness and warmth to wood surfaces.

The glaze is then hand-wiped to create soft, light "hang-up" in profiles and recesses of the wood.

A glaze highlight is hand-applied to detail the recesses of applicable door and drawer designs.

Each door design, wood species and glaze finish has its own charming character and will create a unique, one-of-a-kind look.

Natural wood characteristics such as gum pockets, streaks and pin knots may be visible, particularly with some of our lighter paints. These characteristics tend to be more pronounced on the backs of our doors and drawers

As a final step, our oven-cured DuraKraft Plus™ topcoat is applied to provide a beautiful and durable furniture finish.

Finish availability may vary by door style. See Finish Availability Chart

- **Autumn Blush w/Onyx Glaze**

Warm, rich reddish-brown background stained finish with shadowy black glaze hang-up in corners and profile recesses

- **A56A** Alder
- **A56C** Cherry
- **A56O** Oak

- **Cabernet w/Onyx Glaze**

A deep, dark burgundy background stained finish with shadowy black glaze hang-up in corners and profile recesses

- **A58A** Alder
- **A58B** Birch
- **A58C** Cherry

- **Chestnut w/Onyx Glaze**

A medium brown background stained finish with reddish overtones with shadowy black glaze hang-up in corners and profile recesses

- **A54B** Birch
- **A54M** Maple

- **Chocolate w/Ebony Glaze**

Luscious, medium brown background stained finish with classic black glaze hang-up in corners and profile recesses

- **EGA** Alder
- **EGC** Cherry

- **Cinnamon w/Onyx Glaze**

A spicy, reddish-brown background stained finish with shadowy black glaze hang-up in corners and profile recesses

- **A48A** Alder
- **A48B** Birch
- **A48C** Cherry
- **A48M** Maple

- **Ginger w/Sable Glaze**

A light reddish-brown stained finish with rich brown glaze hang-up in corners and profile recesses

- **C11A** Alder
- **C11B** Birch
- **C11C** Cherry
- **C11H** Hickory
- **C11M** Maple
- **C11O** Oak

- **Praline w/Onyx Glaze**

A golden background stained finish with yellow overtones with shadowy black glaze hang-up in corners and profile recesses

- **A45B** Birch
- **A45H** Hickory
- **A45M** Maple

New Premium Stain w/Glaze Suede Topcoat Finishes

- **Stain w/Glaze Suede**

Glazed finishes add richness and warmth to wood surfaces.

The base stain or paint finish is applied, followed by the application of a glaze finish to the entire door or drawer front to add richness and warmth to wood surfaces.

The glaze is then hand-wiped to create soft, light "hang-up" in profiles and recesses of the wood.

A glaze highlight is hand-applied to detail the recesses of applicable door and drawer designs.

Each door design, wood species and glaze finish has its own charming character and will create a unique, one-of-a-kind look.

Natural wood characteristics such as gum pockets, streaks and pin knots may be visible, particularly with some of our lighter paints. These characteristics tend to be more pronounced on the backs of our doors and drawers

As a final step, a matte sheen, Suede DuraKraft Plus™ topcoat is applied that softens the overall color tone, giving a more subtle and sophisticated appearance to cabinetry.

Finish availability may vary by door style. See Finish Availability Chart

- **Autumn Blush w/Onyx Glaze Suede**

Warm, rich reddish brown background stained finish with shadowy black glaze hang-up in corners and profile recesses and a matte topcoat that softens the color tone and wood

- **E10A** Alder
- **E10C** Cherry
- **E10O** Oak

- **Cabernet w/Onyx Glaze Suede**

A deep, dark burgundy background stained finish with shadowy black glaze hang-up in corners and profile recesses and a matte topcoat that softens the color tone and wood characteristics

- **E11A** Alder
- **E11B** Birch
- **E11C** Cherry

- **Chestnut w/Onyx Glaze Suede**

A medium brown background stained finish with reddish overtones with shadowy black glaze hang-up in corners and profile recesses and a matte topcoat that softens the color tone and wood characteristics

- **E12B** Birch
- **E12M** Maple

- **Chocolate w/Ebony Glaze Suede**

Luscious, medium brown background stained finish with classic black glaze hang-up in corners and profile recesses and a matte topcoat that softens the color tone and wood characteristics

- **E13A** Alder
- **E13C** Cherry

- **Cinnamon w/Onyx Glaze Suede**

A spicy, reddish-brown background stained finish with shadowy black glaze hang-up in corners and profile recesses and a matte topcoat that softens the color tone and wood characteristics

- **E14A** Alder
- **E14B** Birch
- **E14C** Cherry
- **E14M** Maple

- **Ginger w/Sable Glaze Suede**

A light reddish-brown stained finish with rich brown glaze hang-up in corners and profile recesses and a matte topcoat that softens the color tone and wood characteristics

- **E15A** Alder
- **E15B** Birch
- **E15C** Cherry
- **E15H** Hickory
- **E15M** Maple
- **E15O** Oak

- **Praline w/Onyx Glaze Suede**

A golden background stained finish with yellow overtones with shadowy black glaze hang-up in corners and profile recesses and a matte topcoat that softens the color tone and wood characteristics

- **E16B** Birch
- **E16H** Hickory
- **E16M** Maple

Grey color coding indicates new product, size or code.

Premium Distressed Stain Finishes

- Distressed Stain Finish Process

Our distressing technique evokes the look of reclamation and restoration. These effects are hand applied artisan methods that are random and inconsistent in appearance. The techniques are designed to replicate the look of reclaimed wood that has been repurposed. The effects include edge rasping, worm holes, edge burnishing, softened corners, random industrial distressing and a suede top coat.

The multi-step process begins with a light, artistic, over sanding technique applied to corners and relief areas of doors and drawers. Panels and profiles of unfinished doors and drawer fronts receive randomly applied worm holing, edge rasping, and distressing techniques.

Next, a heavy, dark burnishing stain is artistically applied to all corners and raised portions of the doors and drawer fronts.

Following the burnishing process, a coat of base stain color is applied then hand wiped to reveal the beauty and inherent natural characteristics of the wood

As a final step, a matte sheen, Suede DuraKraft Plus™ topcoat is applied that softens the overall color tone, giving a more subtle and sophisticated appearance to cabinetry.

Finish availability may vary by door style. See Finish Availability Chart

- Distressed Autumn Blush

A warm, rich brown stained finish with reddish overtones with the distressed technique applied

- **C22A** Alder
- **C22C** Cherry
- **C22O** Oak

- Distressed Baltic

A light grey stain with warm undertones with distressed technique

- **D79A** Alder
- **D79B** Birch
- **D79C** Cherry
- **D79O** Oak

- Distressed Cabernet

A deep, dark burgundy stained finish with the distressed technique applied

- **C87A** Alder
- **C87B** Birch
- **C87C** Cherry
- **C87M** Maple

- Distressed Cannon Grey

A medium grey stain with cool undertones with distressed technique

- **D82A** Alder
- **D82B** Birch-Available on rustic doors only
- **D82C** Cherry
- **D82M** Maple
- **D82O** Oak

- Distressed Chestnut

Medium brown stained finish with reddish overtones with the distressed technique applied

- **C24B** Birch
- **C24M** Maple

- Distressed Chocolate

Luscious, medium-brown stained finish with distressed technique applied

- **D86A** Alder
- **D86B** Birch
- **D86C** Cherry
- **D86M** Maple

- Distressed Cinnamon

Spicy, reddish-brown stained finish with golden overtones with the distressed technique applied

- **C75A** Alder
- **C75B** Birch
- **C75C** Cherry
- **C75M** Maple

- Distressed Cognac

Medium brown stained finish with pale yellow and dark brown undertones with distressed technique

- **D84A** Alder
- **D84B** Birch
- **D84C** Cherry
- **D84H** Hickory
- **D84M** Maple
- **D84O** Oak

- Distressed Fawn

A soft nut brown stained finish with the distressed technique applied

- **D52O** Oak

- Distressed Ginger

A light reddish-brown stained finish with the distressed technique applied

- **C20A** Alder
- **C20B** Birch
- **C20C** Cherry
- **C20H** Hickory
- **C20M** Maple
- **C20O** Oak

- Distressed Hazel

A sheer, medium brown stained finish with green undertones with the distressed technique applied

- **C18A** Alder
- **C18B** Birch
- **C18C** Cherry
- **C18H** Hickory
- **C18M** Maple
- **C18O** Oak

- Distressed Husk

A neutral camel stained finish with the distressed technique applied

- **C15A** Alder
- **C15B** Birch
- **C15C** Cherry
- **C15H** Hickory
- **C15M** Maple
- **C15O** Oak

- Distressed Kaffé

A warm, rich brown stained finish with deep brown undertones and black overtones with the distressed technique applied

- **C28A** Alder
- **C28B** Birch
- **C28C** Cherry
- **C28H** Hickory
- **C28M** Maple
- **C28O** Oak

- Distressed Molasses

A cool, deep, grey-brown stained finish with the distressed technique applied

- **E60A** Alder
- **E60B** Birch
- **E60C** Cherry
- **E60H** Hickory
- **E60M** Maple
- **E60O** Oak

- Distressed Peppercorn

A dark brown stained finish with rich black overtones with the distressed technique applied

- **C86A** Alder
- **C86C** Cherry
- **C86M** Maple
- **C86O** Oak

Grey color coding indicates new product, size or code.

- **Distressed Praline**
  A golden stained finish with yellow overtones with the distressed technique applied
- **C79A** Alder
- **C79B** Birch
- **C79C** Cherry
- **C79H** Hickory
- **C79M** Maple
- **C79O** Oak

- **Distressed Saddle**
  A cool, deep, smoky brown stained finish with the distressed technique applied
- **C14A** Alder
- **C14B** Birch
- **C14C** Cherry
- **C14H** Hickory
- **C14M** Maple
- **C14O** Oak

- **Distressed Slate**
  A sheer, rich grey stained finish with the distressed technique applied
- **C73B** Birch
- **C73C** Cherry
- **C73H** Hickory
- **C73M** Maple
- **C73O** Oak

- **Distressed Sunset**
  A medium brown stained finish with the distressed technique applied
- **D50A** Alder
- **D50C** Cherry
- **D50H** Hickory

Premium Burnished Stain Finishes

- **Burnished Finish Process**

  Burnished finishes bring out the fine furniture details of the cabinetry to create a warm, traditional look. Burnishing produces one-of-a-kind results and no two doors are exactly alike.

  This multi-step process begins with an artistic over-sanding technique applied to corners and relief areas of unfinished doors and drawer fronts. Random compression marks are also applied, creating the aged look of fine furniture.

  Next, a darkening stain is artistically applied to the corners and raised portions of the door and drawer fronts, creating a burnished effect.

  Following the burnishing process, a coat of base stain color is applied and carefully hand wiped to reveal the beauty and inherent natural characteristics of the wood.

  Burnished finishes are only available on door styles with solid wood center panels

  As a final step, our oven-cured DuraKraft Plus™ topcoat is applied to provide a beautiful and durable furniture finish.

  Finish availability may vary by door style. See Finish Availability Chart

- **Burnished Autumn Blush**

  A warm, rich brown stained finish with reddish overtones with a deep brown stain rubbed on to accent relief areas

- **BAA** Alder
- **BAC** Cherry

- **Burnished Cabernet**

  A deep, dark burgundy stained finish with a deep brown stain rubbed on to accent relief areas

- **BTA** Alder
- **BTC** Cherry

- **Burnished Chestnut**

  Medium brown stained finish with reddish overtones with a deep brown stain rubbed on to accent relief areas

- **BHM** Maple

- **Burnished Chocolate**

  Luscious, medium brown stained finish with a deep brown stain rubbed on to accent relief areas

- **BLA** Alder
- **BLC** Cherry

- **Burnished Cinnamon**

  Spicy, reddish-brown stained finish with golden overtones with a warm brown stain rubbed on to accent relief areas

- **A51A** Alder
- **A51B** Birch
- **A51C** Cherry
- **A51M** Maple

- **Burnished Ginger**

  A light reddish-brown stained finish with warm undertones with a warm brown stain rubbed on to accent relief areas

- **BEA** Alder
- **BEB** Birch
- **BEC** Cherry
- **BEM** Maple

- **Burnished Praline**

  A golden stained finish with yellow undertones with a warm brown stain rubbed on to accent relief areas

- **BPA** Alder
- **BPB** Birch
- **BPH** Hickory
- **BPM** Maple

New Premium Burnished Stain w/Suede Topcoat Finishes

- **Burnished Stain w/Suede Topcoat Finish Process**

  Burnished finishes bring out the fine furniture details of the cabinetry to create a warm, traditional look. Burnishing produces one-of-a-kind results and no two doors are exactly alike.

  This multi-step process begins with an artistic over-sanding technique applied to corners and relief areas of unfinished doors and drawer fronts. Random compression marks are also applied, creating the aged look of fine furniture.

  Next, a darkening stain is artistically applied to the corners and raised portions of the door and drawer fronts, creating a burnished effect.

  Following the burnishing process, a coat of base stain color is applied and carefully hand wiped to reveal the beauty and inherent natural characteristics of the wood.

  Burnished finishes are only available on door styles with solid wood center panels

  As a final step, a matte sheen, Suede DuraKraft Plus™ topcoat is applied that softens the overall color tone, giving a more subtle and sophisticated appearance to cabinetry.

  Finish availability may vary by door style. See Finish Availability Chart

- **Burnished Autumn Blush Suede**

  A warm, rich brown stained finish with reddish overtones with a deep brown stain rubbed on to accent relief areas and a matte topcoat that softens the color tone and wood characteristics

- **E17A** Alder
- **E17C** Cherry

- **Burnished Cabernet Suede**

  A deep, dark burgundy stained finish with a deep brown stain rubbed on to accent relief areas and a matte topcoat that softens the color tone and wood characteristics

- **E18A** Alder
- **E18C** Cherry

- **Burnished Chestnut Suede**

  Medium brown stained finish with reddish overtones with a deep brown stain rubbed on to accent relief areas and a matte topcoat that softens the color tone and wood characteristics

- **E19M** Maple

- **Burnished Chocolate Suede**

  Luscious, medium brown stained finish with a deep brown stain rubbed on to accent relief areas and a matte topcoat that softens the color tone and wood characteristics

- **E20A** Alder
- **E20C** Cherry

- **Burnished Cinnamon Suede**

  Spicy, reddish-brown stained finish with golden overtones with a warm brown stain rubbed on to accent relief areas and a matte topcoat that softens the color tone and wood characteristics

- **E21A** Alder
- **E21B** Birch
- **E21C** Cherry
- **E21M** Maple

- **Burnished Ginger Suede**

  A light reddish-brown stained finish with warm undertones with a warm brown stain rubbed on to accent relief areas and a matte topcoat that softens the color tone and wood characteristics

- **E22A** Alder
- **E22B** Birch
- **E22C** Cherry
- **E22M** Maple

- **Burnished Praline Suede**

  A midtone neutral, amber stained finish with a deep brown stain rubbed onto accent relief areas and a matte topcoat that softens the color tone and wood characteristics

- **E23A** Alder
- **E23B** Birch
- **E23H** Hickory
- **E23M** Maple

Grey color coding indicates new product, size or code.

Premium Painted Finishes

- **Painted Finish Process**

Painted finishes feature rich, beautiful color coating the wood, adding rich depth to your selected profile.

Paint is applied utilizing a spray application process to, EverCore™, Maple or Oak.

EverCore™ is a mechanically compressed wood fiber material that reacts less to environmental conditions than other hardwood materials. It is less susceptible to expansion and contractions that can cause joints to separate showing hairline cracks in painted products. It also provides a more consistent and smooth surface, eliminating the appearance of naturally occurring wood characteristics such as grain patterns, knots or mineral streaks.

For a hardwood option, most painted surfaces are available in Maple due to the more uniform appearance and smooth, clean characteristics of this wood. Since wood naturally expands and contracts, you may see hairline separation in the finish surface at the joints. Joint lines are normal and do ***not*** affect the strength of the door's construction. Alternative materials may be used in the construction of the door and drawer fronts to minimize the environmental effects of joints and panels.

Natural wood characteristics such as gum pockets, streaks and pin knots may be visible, particularly with some of our lighter paints. These characteristics tend to be more pronounced on the backs of our doors and drawers

As a final step, our oven-cured DuraKraft Plus™ topcoat is applied to provide a beautiful and durable furniture finish.

Finish availability may vary by door style. See Finish Availability Chart

- **Biscotti**

Off white painted finish

- **B0D** EverCore™
- **B0M** Maple

- **Bonsai**

A medium green paint with a hint of grey

- **E69D** EverCore™
- **E69M** Maple

- **Burmese**

A midtone warm neutral paint

- **E67D** EverCore™
- **E67M** Maple

- **Canvas**

Creamy white painted finish

Available on select EverCore™ and Maple door styles

- **CVD** EverCore™
- **CVM** Maple

- **Chai**

A soft, neutral, light, taupe painted finish

- **C29D** EverCore™
- **C29M** Maple

- **Dove White**

White painted finish

- **DWD** EverCore™
- **DWM** Maple

- **Greyloft**

Warm, earthy, midtone grey painted finish

- **B65D** EverCore™
- **B65M** Maple

- **Lagoon**

A medium blue paint with grey undertones

- **E63D** EverCore™
- **E63M** Maple

- **Linen**

Khaki colored, light neutral painted finish

- **D90D** EverCore™
- **D90M** Maple

- **Midnight**

Rich, dark blue painted finish reminiscent of the night sky

- **B69D** EverCore™
- **B69M** Maple

- **Moonshine**

Very light and soft, grey neutral painted finish

- **D98D** EverCore™
- **D98M** Maple

- **Mushroom**

Soft, neutral mushroom color painted finish

- **A11D** EverCore™
- **A11M** Maple

- **Onyx**

Black painted finish

- **A21D** EverCore™
- **A21M** Maple
- **A21O** Oak

- **Pebble Grey**

A cool, light grey painted finish

- **B83D** EverCore™
- **B83M** Maple

- **Surfside**

A very light blue paint with a hint of grey

- **E65D** EverCore™
- **E65M** Maple

Grey color coding indicates new product, size or code.

New

Premium Paint w/Suede Topcoat Finishes

❊ **Paint w/Suede Topcoat Finish Process**

Painted finishes feature rich, beautiful color coating the wood, adding rich depth to your selected profile.

Paint is applied utilizing a spray application process.

Since wood naturally expands and contracts, you may see hairline separation in the finish surface at the joints. Joint lines are normal and do ***not*** affect the strength of the door's construction

Most painted finishes are available only on maple due to the more uniform appearance and smooth, clean characteristics of this wood.

As a final step, our oven-cured, matte sheen Suede DuraKraft Plus™ topcoat is applied to provide a beautiful and durable furniture finish.

Finish availability may vary by door style. See Finish Availability Chart

- **Biscotti Suede**

  Off white painted finish with a matte topcoat that softens the color tone and wood characteristics
- **D36D** EverCore™
- **D36M** Maple

- **Bonsai Suede**

  A medium green paint with a hint of grey with a matte topcoat that softens the color tone and wood characteristics
- **E70D** EverCore™
- **E70M** Maple

- **Burmese Suede**

  A midtone warm neutral paint with a matte topcoat that softens the color tone and wood characteristics
- **E68D** EverCore™
- **E68M** Maple

- **Canvas Suede**

  Creamy white painted finish with a matte topcoat that softens the color tone and wood characteristics
- **D37D** EverCore™
- **D37M** Maple

- **Chai Suede**

  A soft, neutral, light taupe painted finish with a matte topcoat that softens the color tone and wood characteristics
- **D39D** EverCore™
- **D39M** Maple

- **Dove White Suede**

  White painted finish with a matte topcoat that softens the color tone and wood characteristics
- **D40D** EverCore™
- **D40M** Maple

- **Greyloft Suede**

  Warm, midtone grey painted finish with a matte topcoat that softens the color tone and wood characteristics
- **D41D** EverCore™
- **D41M** Maple

- **Lagoon Suede**

  A medium blue paint with grey undertones and a matte topcoat that softens the color tone and wood characteristics
- **E64D** EverCore™
- **E64M** Maple

- **Linen Suede**

  Khaki colored, light neutral painted finish with a matte topcoat that softens the color tone
- **D93D** EverCore
- **D93M** Maple

- **Midnight Suede**

  Rich, dark blue painted finish with a matte topcoat that softens the color tone and wood characteristics
- **D42D** EverCore™
- **D42M** Maple

- **Moonshine Suede**

  Very light and soft, grey neutral painted finish with a matte topcoat that softens the color tone
- **E02D** EverCore
- **E02M** Maple

- **Mushroom Suede**

  Light mushroom color painted finish with a matte topcoat that softens the color tone and wood characteristics
- **D43D** EverCore™
- **D43M** Maple

- **Onyx Suede**

  Black painted finish with a matte topcoat that softens the color tone and wood characteristics
- **D44D** EverCore™
- **D44M** Maple
- **D44O** Oak

- **Pebble Grey Suede**

  Cool, light grey painted finish with a matte topcoat that softens the color tone and wood characteristics
- **D45D** EverCore
- **D45M** Maple

- **Surfside Suede**

  A very light blue paint with a hint of grey and a matte topcoat that softens the color tone and wood characteristics
- **E66D** EverCore™
- **E66M** Maple

❊ Natural wood characteristics such as gum pockets, streaks and pin knots may be visible, particularly with some of our lighter paints. These characteristics tend to be more pronounced on the backs of our doors and drawers

Grey color coding indicates new product, size or code.

Premium Paint w/Glaze Finishes

- **Paint w/Glaze Finish Process**

Glazed finishes add richness and warmth to wood surfaces.

The base stain or paint finish is applied, followed by the application of a glaze finish to the entire door or drawer front to add richness and warmth to wood surfaces.

The glaze is then hand-wiped to create soft, light "hang-up" in profiles and recesses of the wood.

A glaze highlight is hand-applied to detail the recesses of applicable door and drawer designs.

Each door design, wood species and glaze finish has its own charming character and will create a unique, one-of-a-kind look.

Natural wood characteristics such as gum pockets, streaks and pin knots may be visible, particularly with some of our lighter paints. These characteristics tend to be more pronounced on the backs of our doors and drawers

As a final step, our oven-cured DuraKraft Plus™ topcoat is applied to provide a beautiful and durable furniture finish.

Finish availability may vary by door style. See Finish Availability Chart

- **Biscotti w/Cinder Glaze**

Off-white painted finish background with warm midtone grey glaze hang-up in corners and profile recesses

- **B91M** Maple

- **Biscotti w/Cocoa Glaze**

Off-white painted finish background with soft brown glaze hang-up in corners and profile recesses

- **IGM** Maple

- **Canvas w/Cinder Glaze**

Creamy white painted finish background with warm midtone grey glaze hang-up in corners and profile recesses

- **B90M** Maple

- **Canvas w/Cocoa Glaze**

Creamy white painted finish background with soft brown glaze hang-up in corners and profile recesses

- **VGM** Maple

- **Chai w/Cinder Glaze**

A soft, neutral, light taupe painted background with warm midtone grey glaze hang-up in beaded or V-Grooves

- **C32M** Maple

- **Chai w/Cocoa Glaze**

A soft, neutral, light taupe painted background with soft brown glaze hang-up in beaded or V-Grooves

- **C30M** Maple

- **Dove White w/Cinder Glaze**

Dove White painted background with warm midtone grey glaze hang-up in corners and profile recesses

- **B89M** Maple

- **Dove White w/Cocoa Glaze**

Dove White painted background with soft brown glaze hang-up in corners and profile recesses

- **A15M** Maple

- **Greyloft w/Sable Glaze**

Warm, midtone, grey painted background with rich brown glaze hang-up in corners and profiles

- **B66M** Maple

- **Linen w/Cinder Glaze**

Khaki colored, light neutral painted finish background with a warm midtone grey glaze hang-up in corners and profile recesses

- **D96M** Maple

- **Linen w/Cocoa Glaze**

Khaki colored, light neutral painted finish background with soft brown glaze hang-up in corners and profile

- **D94M** Maple

- **Midnight w/Onyx Glaze**

Rich, dark blue painted background with shadowy black glaze hang-up in corners and profiles

- **B70M** Maple

- **Moonshine w/Cinder Glaze**

Very light and soft, grey neutral painted finish background with warm midtone grey glaze hang-up in corners and profile recesses

- **E04M** Maple

- **Moonshine w/Cocoa Glaze**

Very light and soft, grey neutral painted finish background with soft brown glaze hang-up in corners and profile

- **E03M** Maple

- **Mushroom w/Cinder Glaze**

Light, mushroom-color painted background with warm midtone grey glaze hang-up in corners and profile recesses

- **B92M** Maple

- **Mushroom w/Cocoa Glaze**

Light, mushroom-color painted background with soft brown glaze hang-up in corners and profile recesses

- **A12M** Maple

- **Pebble Grey w/Cocoa Glaze**

Cool, light grey painted background with soft brown glaze hang-up in corners and profile recesses

- **B84M** Maple

New Premium Paint w/Glaze Suede Topcoat Finishes

- **Paint w/Glaze Suede Finish Process**

  Glazed finishes add richness and warmth to wood surfaces.

  The base stain or paint finish is applied, followed by the application of a glaze finish to the entire door or drawer front to add richness and warmth to wood surfaces.

  The glaze is then hand-wiped to create soft, light "hang-up" in profiles and recesses of the wood.

  A glaze highlight is hand-applied to detail the recesses of applicable door and drawer designs.

  Each door design, wood species and glaze finish has its own charming character and will create a unique, one-of-a-kind look.

  Natural wood characteristics such as gum pockets, streaks and pin knots may be visible, particularly with some of our lighter paints. These characteristics tend to be more pronounced on the backs of our doors and drawers

  As a final step, a matte sheen, Suede DuraKraft Plus™ topcoat is applied that softens the overall color tone, giving a more subtle and sophisticated appearance to cabinetry.

  Finish availability may vary by door style. See Finish Availability Chart

- **Biscotti w/Cinder Glaze Suede**

  Off-white painted finish background with warm midtone grey glaze hang-up in corners and profile recesses and a matte topcoat that softens the color tone

- **E24M** Maple

- **Biscotti w/Cocoa Glaze Suede**

  Off-white painted finish background with soft brown glaze hang-up in corners and profile recesses and a matte topcoat that softens the color tone

- **E25M** Maple

- **Canvas w/Cinder Glaze Suede**

  Creamy white painted finish background with warm midtone grey glaze hang-up in corners and profile recesses and a matte topcoat that softens the color tone

- **E26M** Maple

- **Canvas w/Cocoa Glaze Suede**

  Creamy white painted finish background with soft brown glaze hang-up in corners and profile recesses and a matte topcoat that softens the color tone

- **E27M** Maple

- **Chai w/Cinder Glaze Suede**

  A soft, neutral, light taupe painted background with warm midtone grey glaze hang-up in beaded or V-Grooves and a matte topcoat that softens the color tone

- **E28M** Maple

- **Chai w/Cocoa Glaze Suede**

  A soft, neutral, light taupe painted background with soft brown glaze hang-up in beaded or V-Grooves and a matte topcoat that softens the color tone

- **E29M** Maple

- **Dove White w/Cinder Glaze Suede**

  Dove White painted background with warm midtone grey glaze hang-up in corners and profile recesses and a matte topcoat that softens the color tone

- **E30M** Maple

- **Dove White w/Cocoa Glaze Suede**

  Dove White painted background with soft brown glaze hang-up in corners and profile recesses and a matte topcoat that softens the color tone

- **E31M** Maple

- **Greyloft w/Sable Glaze Suede**

  Warm, midtone, grey painted background with rich brown glaze hang-up in corners and profiles and a matte topcoat that softens the color tone

- **E32M** Maple

- **Linen w/Cinder Glaze Suede**

  Khaki colored, light neutral painted finish background with a warm midtone grey glaze hang-up in corners and profile recesses and a matte topcoat that softens the color tone

- **E33M** Maple

- **Linen w/Cocoa Glaze Suede**

  Khaki colored, light neutral painted finish background with soft brown glaze hang-up in corners and profile and a matte topcoat that softens the color tone

- **E34M** Maple

- **Midnight w/Onyx Glaze Suede**

  Rich, dark blue painted background with shadowy black glaze hang-up in corners and profiles and a matte topcoat that softens the color tone

- **E35M** Maple

- **Moonshine w/Cinder Glaze Suede**

  Very light and soft, grey neutral painted finish background with warm midtone grey glaze hang-up in corners and profile recesses and a matte topcoat that softens the color tone

- **E36M** Maple

- **Moonshine w/Cocoa Glaze Suede**

  Very light and soft, grey neutral painted finish background with soft brown glaze hang-up in corners and profile and a matte topcoat that softens the color tone

- **E37M** Maple

- **Mushroom w/Cinder Glaze Suede**

  Light, mushroom-color painted background with warm midtone grey glaze hang-up in corners and profile recesses and a matte topcoat that softens the color tone

- **E38M** Maple

- **Mushroom w/Cocoa Glaze Suede**

  Light, mushroom-color painted background with soft brown glaze hang-up in corners and profile recesses and a matte topcoat that softens the color tone

- **E39M** Maple

- **Pebble Grey w/Cocoa Glaze Suede**

  Cool, light grey painted background with soft brown glaze hang-up in corners and profile recesses and a matte topcoat that softens the color tone

- **E40M** Maple

Premium Vintage Paint Finishes

- **Vintage Finish Process**

  Vintage finishes give the appearance of heirloom cabinetry that has been well loved and used.

  This multi-step process begins with an artistic over-sanding technique applied to corners and relief areas, creating the aged look of fine furniture.

  Unfinished doors and drawer heads receive randomly applied wormholes and compression marks to add additional distressing.

  Next, several coats of paint finish are applied.

  The corners and edges of doors and drawers are over-sanded for a second time, revealing the beauty of natural Cherry wood.

  Because this process features distressing, the detail and look will very from piece to piece

  As a final step, our oven-cured DuraKraft Plus™ topcoat is applied to provide a beautiful and durable furniture finish.

  Finish availability may vary by door style. See Finish Availability Chart

  Available on select Cherry door styles. Visible knots and pinholes are natural characteristics found in Cherry wood, which accentuate the Vintage finish process. These characteristics are ***not*** considered to be product defects.

  Maple or other materials may be used in other cabinet components and accessories to help eliminate the appearance of knots and pinholes in pieces where the Vintage process is ***not*** applied

- **Vintage Biscotti**

  Off-white painted finish with the Vintage technique applied

- **VSC** Cherry

- **Vintage Canvas**

  Creamy white painted finish with the Vintage technique applied

- **VCC** Cherry

- **Vintage Chai**

  A soft, neutral, light taupe painted finish with the Vintage technique applied

- **C35C** Cherry

- **Vintage Dove White**

  White painted finish with the Vintage technique applied

- **VDC** Cherry

- **Vintage Greyloft**

  Warm, midtone grey painted finish with the Vintage technique applied

- **B67C** Cherry

- **Vintage Linen**

  Khaki colored, light neutral painted finish with the Vintage technique applied

- **D91C** Cherry

- **Vintage Midnight**

  Rich, dark blue painted finish with the Vintage technique applied

- **B71C** Cherry

- **Vintage Moonshine**

  Very light and soft, grey neutral painted finish with the vintage technique applied

- **D99C** Cherry

- **Vintage Mushroom**

  Light, mushroom color painted finish with the Vintage technique applied

- **A13C** Cherry

- **Vintage Onyx**

  Black painted finish with the Vintage technique applied

- **VOC** Cherry

- **Vintage Pebble Grey**

  Cool, light grey painted finish with the Vintage technique applied

- **B86C** Cherry

Premium Vintage Paint w/Suede Topcoat Finishes

- **Vintage Finish with Suede Process**

  Vintage finishes give the appearance of heirloom cabinetry that has been well loved and used.

  This multi-step process begins with an artistic over-sanding technique applied to corners and relief areas, creating the aged look of fine furniture.

  Unfinished doors and drawer heads receive randomly applied wormholes and compression marks to add additional distressing.

  Next, several coats of paint finish are applied.

  The corners and edges of doors and drawers are over-sanded for a second time, revealing the beauty of natural Cherry wood.

  Because this process features distressing, the detail and look will very from piece to piece

  As a final step, a matte sheen, Suede DuraKraft Plus™ topcoat is applied that softens the overall color tone, giving a more subtle and sophisticated appearance to cabinetry.

  Finish availability may vary by door style. See Finish Availability Chart

  Available on select Cherry door styles. Visible knots and pinholes are natural characteristics found in Cherry wood, which accentuate the Vintage finish process. These characteristics are ***not*** considered to be product defects.

  Maple or other materials may be used in other cabinet components and accessories to help eliminate the appearance of knots and pinholes in pieces where the Vintage process is ***not*** applied

- **Vintage Biscotti Suede**

  Off-white painted finish with the Vintage technique applied and a matte topcoat that softens the color tone

- **E41C** Cherry

- **Vintage Canvas Suede**

  Creamy white painted finish with the Vintage technique applied and a matte topcoat that softens the color tone

- **E42C** Cherry

- **Vintage Chai Suede**

  A soft, neutral, light taupe painted finish with the Vintage technique applied and a matte topcoat that softens the color tone

- **E43C** Cherry

- **Vintage Dove White Suede**

  White painted finish with the Vintage technique applied and a matte topcoat that softens the color tone

- **E44C** Cherry

- **Vintage Greyloft Suede**

  Warm, midtone grey painted finish with the Vintage technique applied and a matte topcoat that softens the color tone

- **E45C** Cherry

- **Vintage Linen Suede**

  Khaki colored, light neutral painted finish with the Vintage technique and a matte topcoat that softens the color tone

- **E46C** Cherry

- **Vintage Midnight Suede**

  Rich, dark blue painted finish with the Vintage technique applied and a matte topcoat that softens the color tone

- **E47C** Cherry

- **Vintage Moonshine Suede**

  Very light and soft, grey neutral painted finish with the vintage technique and a matte topcoat that softens the color tone

- **E48C** Cherry

- **Vintage Mushroom Suede**

  Light, mushroom color painted finish with the Vintage technique applied and a matte topcoat that softens the color tone

- **E49C** Cherry

- **Vintage Onyx Suede**

  Black painted finish with the Vintage technique applied and a matte topcoat that softens the color tone

- **E50C** Cherry

- **Vintage Pebble Grey Suede**

  Cool, light grey painted finish with the Vintage technique applied and a matte topcoat that softens the color tone

- **E51C** Cherry

Premium Aged Paint Finishes

Aged Paint Finish Process

Our Aged technique evokes the look of artisan-finished cabinetry that has been well loved over time.

Distressing effects are hand applied artisan methods that are random and inconsistent in appearance. Because every detail is hand applied, each finished component will have a unique appearance. The effects include edge rasping, worm holes, edge burnishing, softened corners and edges, random dent patterns and a suede topcoat.

The multi-step process begins with a light, artistic, over sanding technique applied to corners, edges and relief areas of doors and drawers. Panels and profiles of unfinished doors and drawer fronts receive randomly applied worm holing, edge rasping and distressing techniques.

Following the distressing techniques, paint is applied followed by application of a glaze finish to the entire door or drawer front to add richness to the paint color. The glaze is then hand wiped to create soft, light "hang up" in profiles and recesses of the wood including the distressing effects. Additional glaze is applied through a dry-brushing process to give each door or drawer component a subtle linear accent. A dark burnishing material is then used to accent the softened corners and edges. Finally, fly speck is applied randomly to the door or drawer to add depth and dimension to the finish.

As a final step a matte sheen, Suede DuraKraft Plus™ topcoat, is applied to complete the Aged finish.

Note: The back side of doors receive paint and flood glaze. The remaining treatments, including additional glazing, fly speck and dry brushing, will ***not*** be applied to the back side resulting in a lighter color than the front side of the door and frame.

Note: Viraguard components such as VSK, VPL, MTK8, etc. are not available with Aged Finishes. Corresponding wood veneer components such as WSK, WPL, WMTK8, etc. must be ordered to receive the matching aged finish.



Please ***Note***: Select cabinets that have matching interior standard and End Panels with a front filler attached will contain the code "-A. APFC" on order acknowledgments. The code is used as an internal safeguard to ensure proper finished parts are used in the cabinet construction and does not assign additional charges to the cabinet price.



Product Attributes:
Ends will ***not*** have a matching finish unless specified
Standard construction will have natural birch Viraguard ends
Plywood Ends Both (PEB) and All Plywood Construction (AP/APC) will have wood veneer ends with natural clear coat

To get finished ends without matching interior, use:
Furniture Plywood Ends (FPEB)
All Plywood Furniture End Panels (APFC)
Integrated Decorative Ends (DE)
Operational Ends (OE)
Wood Skins (WSK), Wood Skins are field-applied

To get finished ends with matching interior:
Use Matching Interior with 3/4" Furniture End Panels on All Plywood (MIAPFC)
MIAPFC will finish the interior and exterior of the cabinet. Cabinets ***cannot*** be ordered with matching interior and unfinished exterior ends

Options that are ***NOT*** available for this finish:
Matching Interior Standard Construction-Viraguard (MIV)
Matching Interior with 1/2" Plywood End Panels (MIP)
Matching Interior with 3/4" Furniture Plywood End Panels (MIFP)

- **Aged Concrete**
  Soft grey neutral painted finish with grey glaze and the Aged technique applied
- **E06M** Maple

- **Aged Papyrus**
  Off-white painted finish with grey-brown glaze and the Aged technique applied
- **E05M** Maple

- **Aged River Rock**
  Cool grey painted finish with grey glaze and the Aged technique applied
- **E07M** Maple

Notes

Cabinet Specs

Construction Options and Modifications

Full Overlay–Concealed Hinges

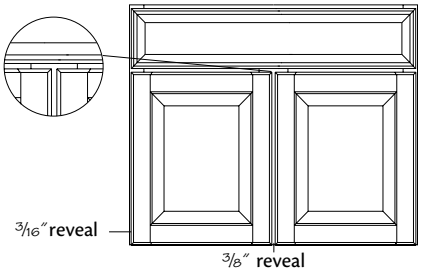

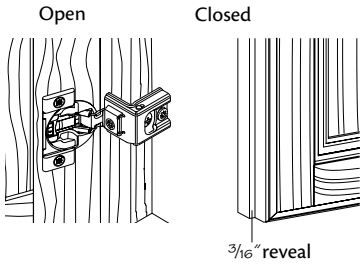

- Full overlay doors leave 3/8″ of the cabinet's face frame exposed between doors
- Whisper Touch™ hinge features an integrated mechanism that closes doors softly and quietly and is adjustable six ways for perfect alignment
- The reveals shown here may vary slightly on some cabinets due to actual door/drawer front sizes used. Refer to the replacement door and drawer section of this book for actual door/drawer sizes for specific cabinets
- ***Note:*** Door styles with square outside edges (including aluminum frame decorative doors) ***cannot*** be opened simultaneously on adjacent cabinets because the doors will rub together. This is a common occurrence due to the sizing of full overlay doors

1/2″ Overlay–Concealed or Knife Hinge

Concealed Hinge

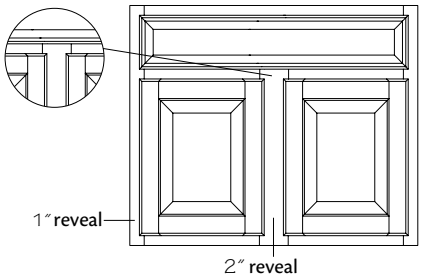

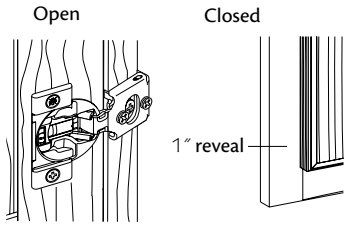

Knife Hinge

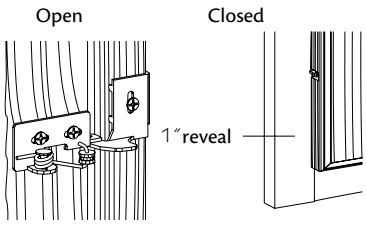

- 1/2″ overlay doors leave 2″ of the cabinet's face frame exposed between doors
- Whisper Touch™ hinge features an integrated mechanism that closes doors softly and quietly and is adjustable six ways for perfect alignment
- Knife hinge capable of opening 180º
- Knife hinges are ***not*** available on any full overlay door styles
- A knife hinge option is available on 1/2″ overlay door styles (see list below)
- Knife Hinge is available in the following door styles: Belmont Roman, Belmont Square, Grandview Cherry Roman–Half, Grandview Cherry Square–Half, Hanley Roman, Hanley Square
- The reveals shown here may vary slightly on some cabinets due to actual door/drawer front sizes used. Refer to the replacement door and drawer section of this book for actual door/drawer sizes for specific cabinets

Material dimensions listed may vary slightly from actual dimensions of the product

Cabinet Specifications

KraftMaid® Cabinetry is also available in an All Plywood (APC) Option
See Construction Options section for a complete description.

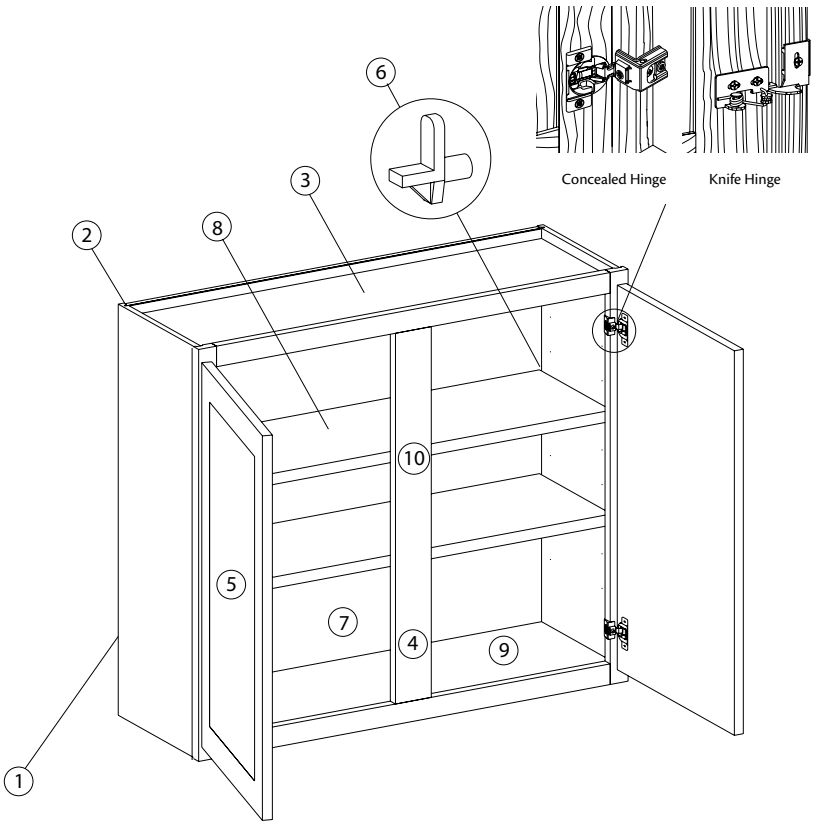

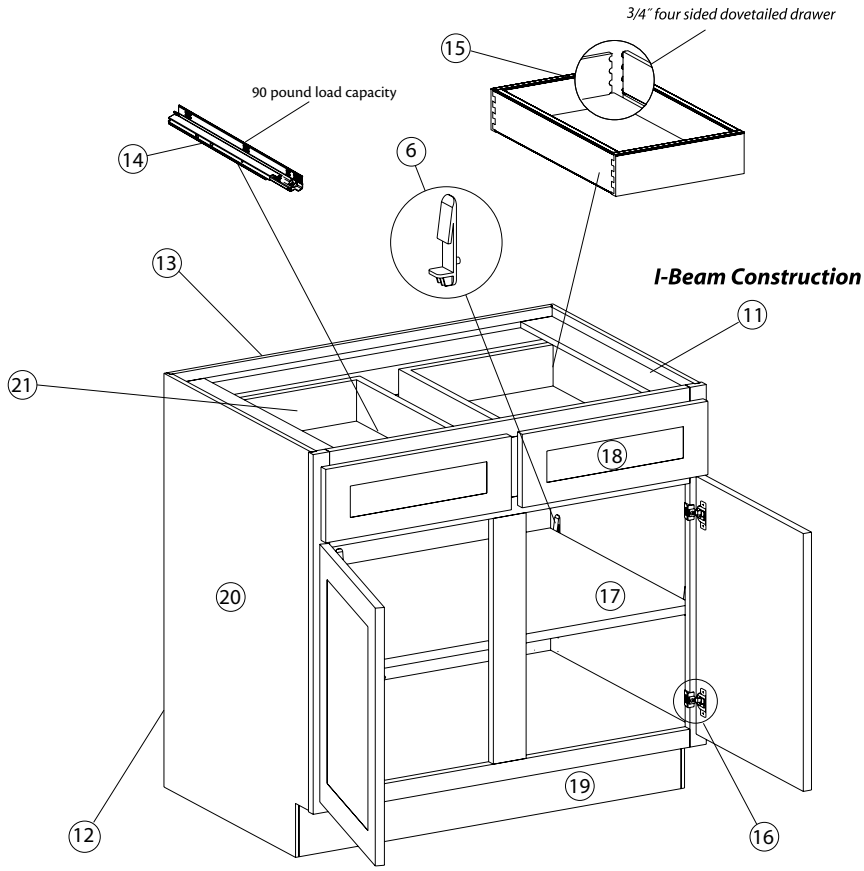

- (1) Viraguard clad back panel
- (2) 1/2" wood concealed hanging rail
- (3) 1/2" Natural Birch Viraguard clad ceiling panel
- (4) 3/4" solid hardwood, including but ***not*** limited to, Alder, Birch, Cherry, Hickory, Maple and Oak front frame constructed using industrial grade glue and hardened steel fasteners. Front frame species complements selected door style
- (5) Extensive and unique door style and wood species selection in Alder, Birch, Cherry, EverCore™, Hickory, Maple and Oak. Solid and wood veneer construction available. Also available in Thermofoil, High-Gloss Foil and Wood-Grain Foil
- (6) Satin chrome shelf rests for all kitchen wall and furniture cabinets. Easily adjustable positive locking shelf clips for all base, tall and vanity cabinets
- (7) Natural Birch Viraguard interior
- (8) 3/4" fully adjustable Natural Birch Viraguard clad shelving standard feature in wall, base and tall cabinets
- (9) 1/2" Natural Birch Viraguard clad cabinet bottom
- (10) 14-step DuraKraft Plus™ furniture process featuring hand-wiped stain with one of the finest wood finishes available in the cabinet industry
- (11) Full-depth I-beam braces provide stability and convenient anchor points for countertop
- (12) 3/8" Natural Birch Viraguard clad base back panel
- (13) 3/4" solid wood base installation rail
- (14) Standard drawer runner suspension system features smooth, ball bearing operation with a 90 lb. load capacity. Whisper Touch™ runner has an integrated drawer buffer that engages two inches from closing and applies resistance, giving a soft, controlled closing
- (15) 3/4" full-depth solid wood dovetailed drawer featuring four sided construction and 3/16" plywood bottom
- (16) Self-closing, concealed, wrap-around adjustable or optional knife hinges (KH)
- (17) Full-depth, fully adjustable 3/4" Natural Birch Viraguard clad shelving
- (18) Drawer heads are solid hardwood or laminate to complement each door style
- (19) Fully closed toe space area
- (20) 1/2" end panels with wood grain Viraguard interior and matching exterior. Also available with optional 1/2" or 3/4" plywood end panels. Wood grain Viraguard interior or wood veneer interior available. Unless noted, plain sawn end panels will be supplied for quartersawn door styles
- (21) Standard drawer boxes are 4" high
- Viraguard is the tradename of our printed wood grain laminate
- ***Note:*** Unless noted, cabinet depth does ***not*** include doors or drawer fronts
- ***Note:*** Please contact Customer Care if your design requires verification of product specifications

Material dimensions listed may vary slightly from actual dimensions of the product

Frame Dimensions–84" H

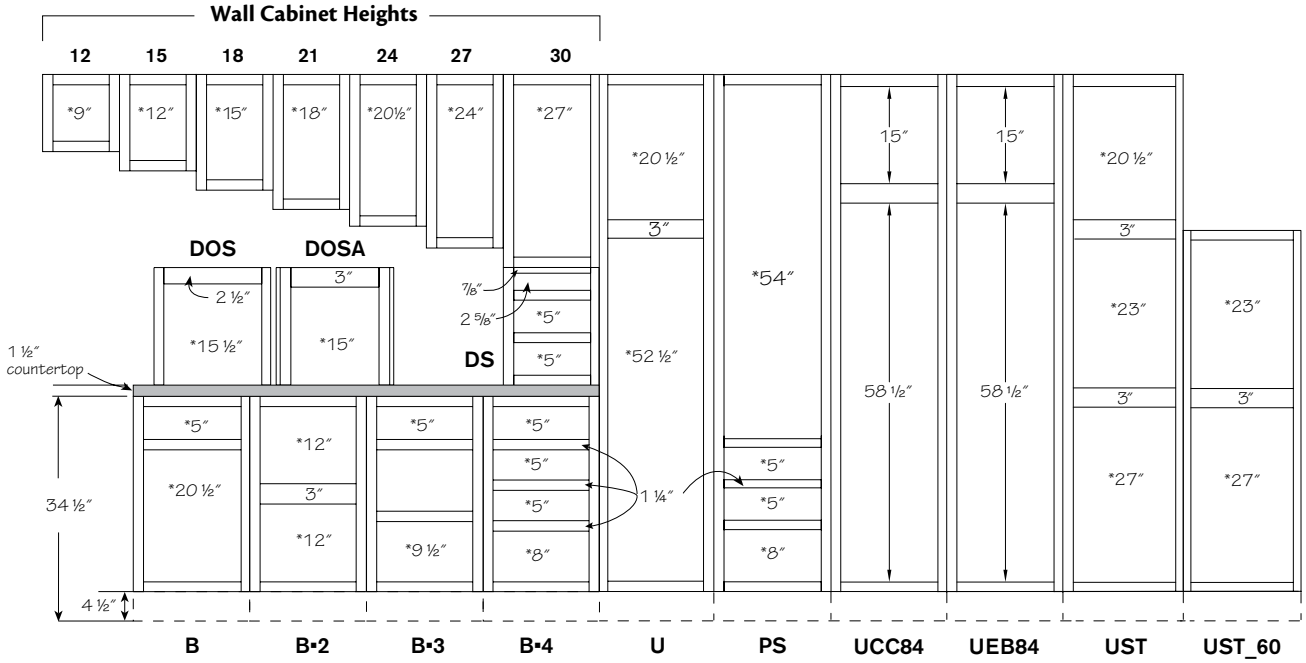

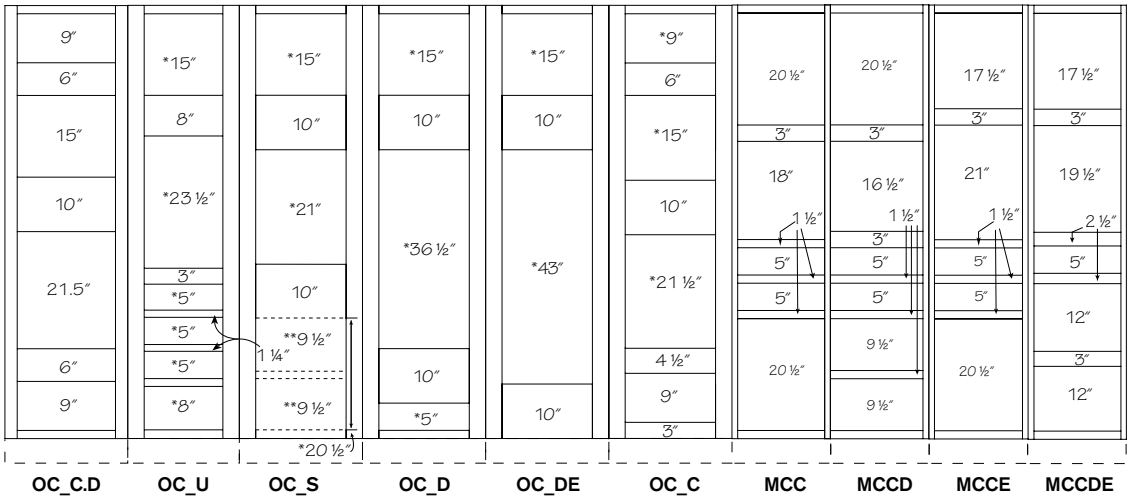

***Dotted lines show drawer heights for •2D*

- Unless otherwise noted, all stiles and rails are 1 1/2"
- 3" vertical stiles divide double door cabinets over 36" wide
- Unless noted, oven cabinets have 3" vertical stiles
- Opening sizes are preceded by an asterisk (*)
- Toe kick depth is 3 1/8"
- Drawer fronts will not align with one another when using 3 drawer and 4 drawer stack cabinets side-by-side
- ***Note***: Unless noted, cabinet depth does ***not*** include doors or drawer fronts

Material dimensions listed may vary slightly from actual dimensions of the product

Frame Dimensions–87" H

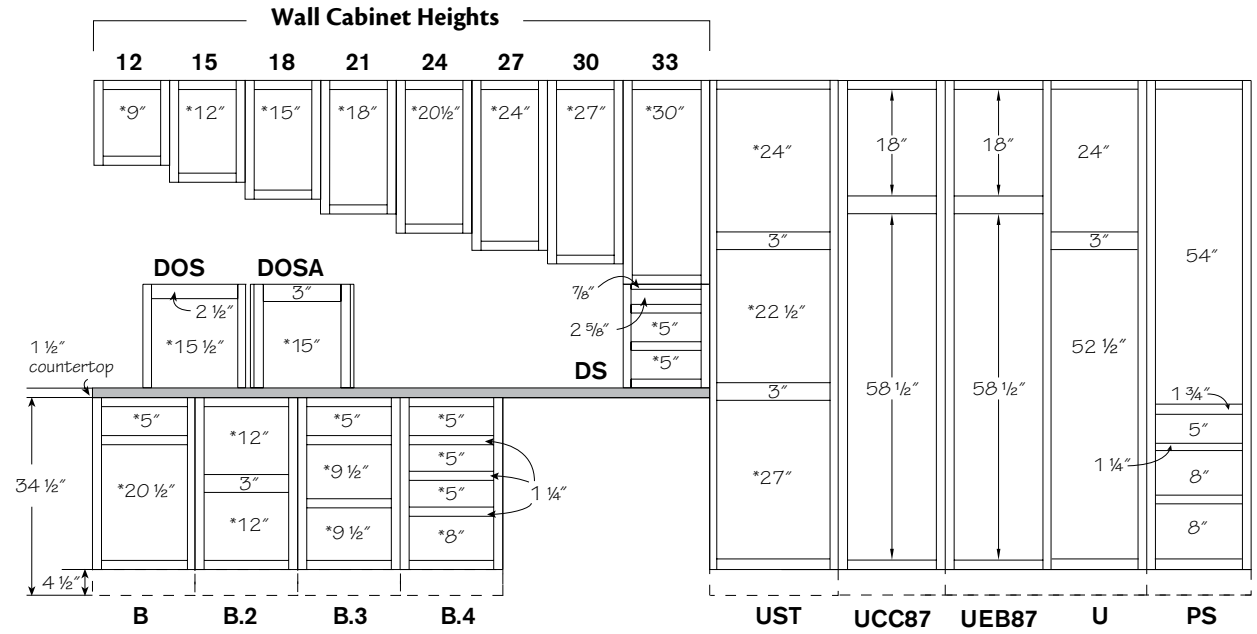

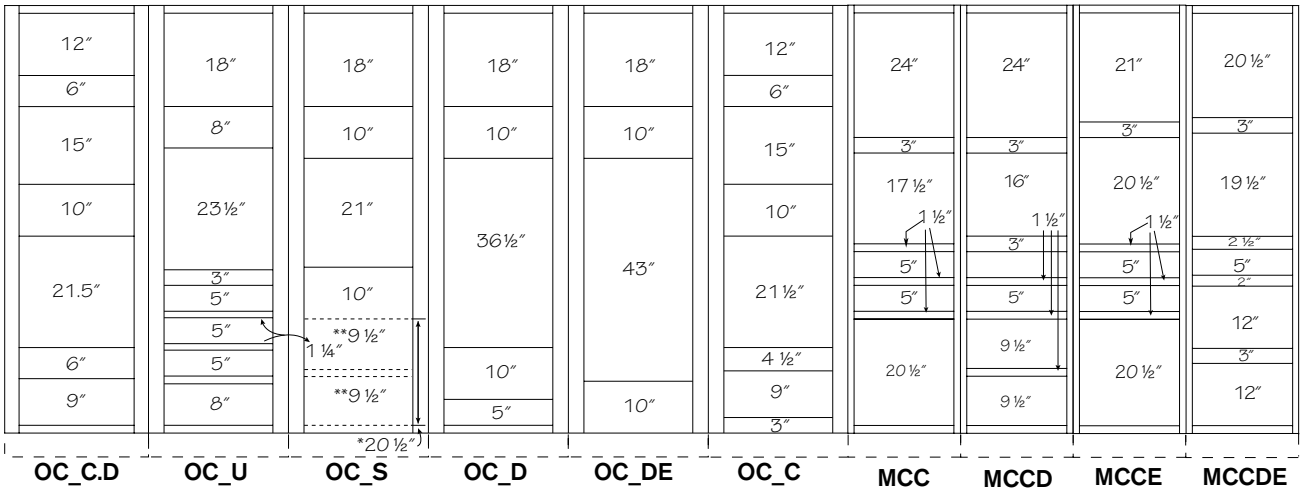

***Dotted lines show drawer heights for •2D*

- Unless otherwise noted, all stiles and rails are 1 1/2″
- 3″ vertical stiles divide double door cabinets over 36″ wide
- Unless noted, oven cabinets have 3″ vertical stiles
- Opening sizes are preceded by an asterisk (*)
- Toe kick depth is 3 1/8″
- Drawer fronts will not align with one another when using 3 drawer and 4 drawer stack cabinets side-by-side
- ***Note***: Unless noted, cabinet depth does ***not*** include doors or drawer fronts

Material dimensions listed may vary slightly from actual dimensions of the product

Frame Dimension–90" H

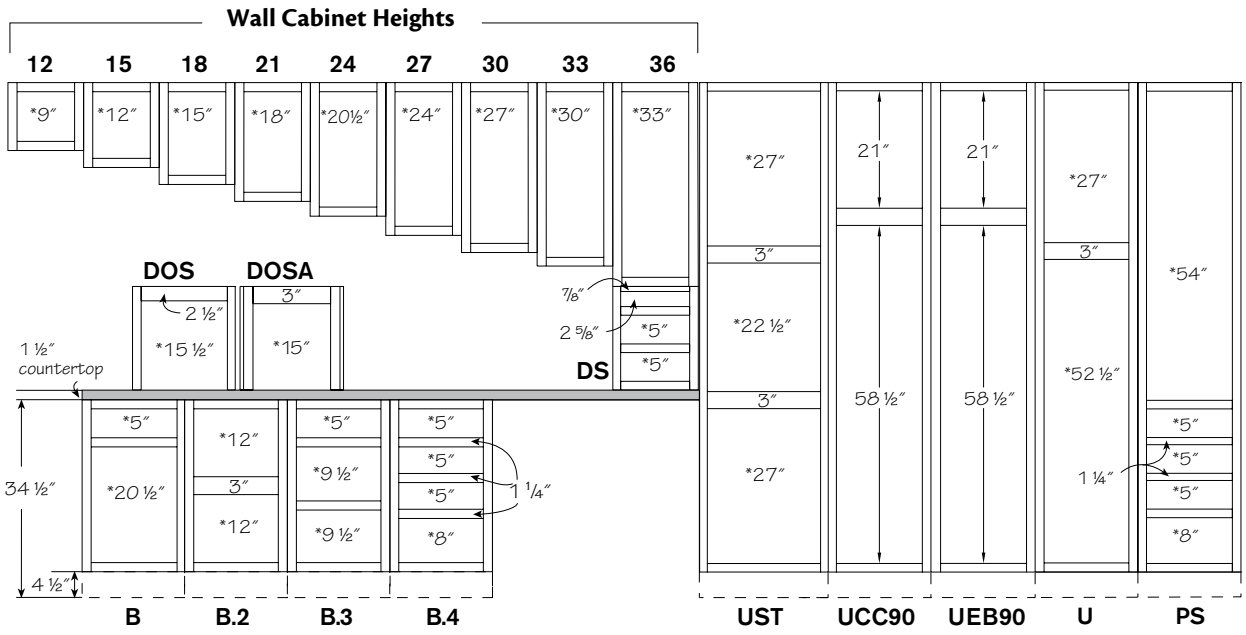

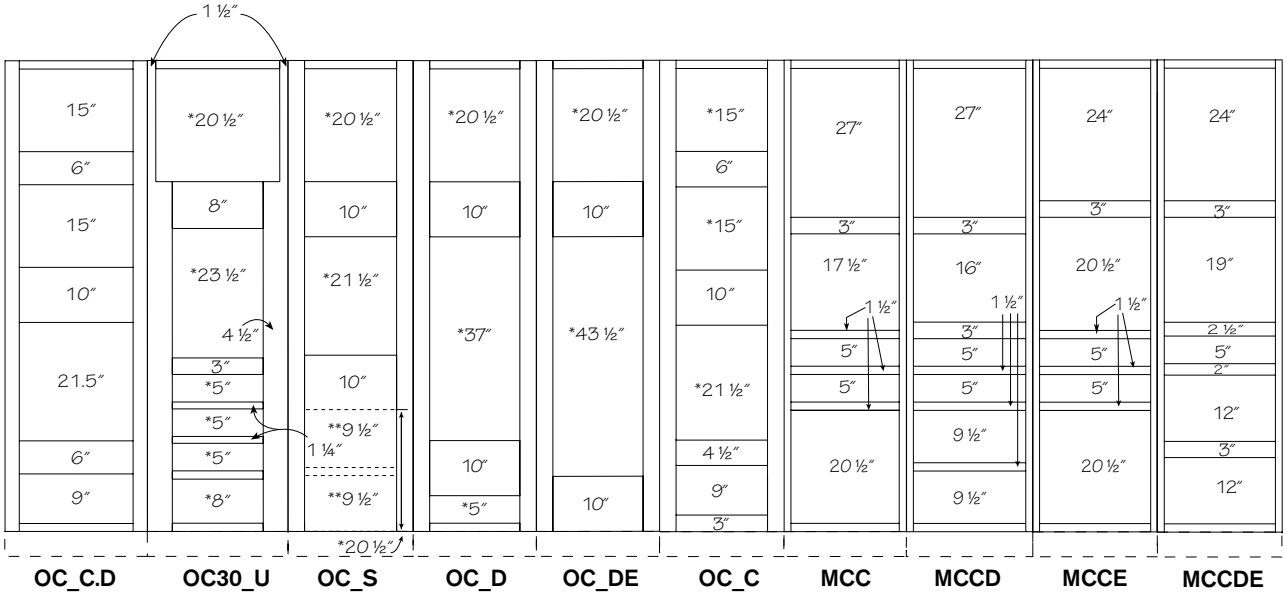

***Dotted lines show drawer heights for •2D*

- Unless otherwise noted, all stiles and rails are 1 1/2″
- 3″ vertical stiles divide double door cabinets over 36″ wide
- Unless noted, oven cabinets have 3″ vertical stiles
- Opening sizes are preceded by an asterisk (*)
- Toe kick depth is 3 1/8″
- Drawer fronts will not align with one another when using 3 drawer and 4 drawer stack cabinets side-by-side
- ***Note***: Unless noted, cabinet depth does ***not*** include doors or drawer fronts

Material dimensions listed may vary slightly from actual dimensions of the product

Frame Dimension–93" H

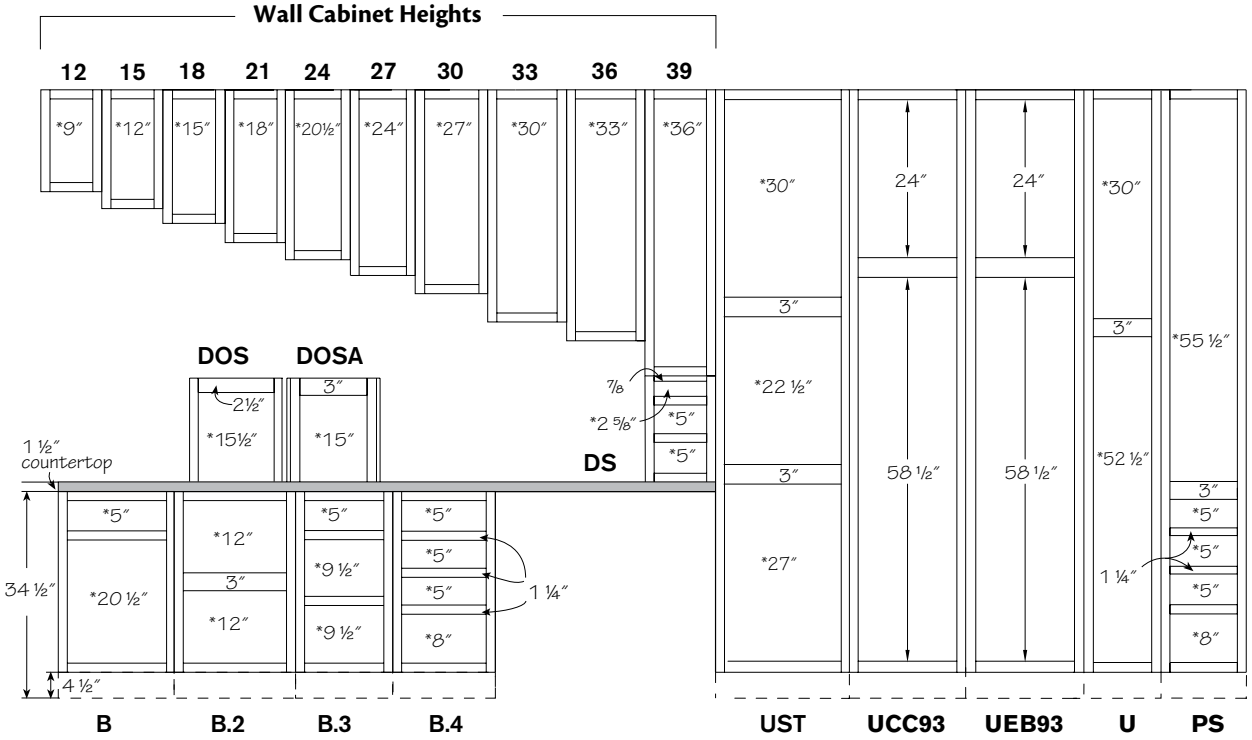

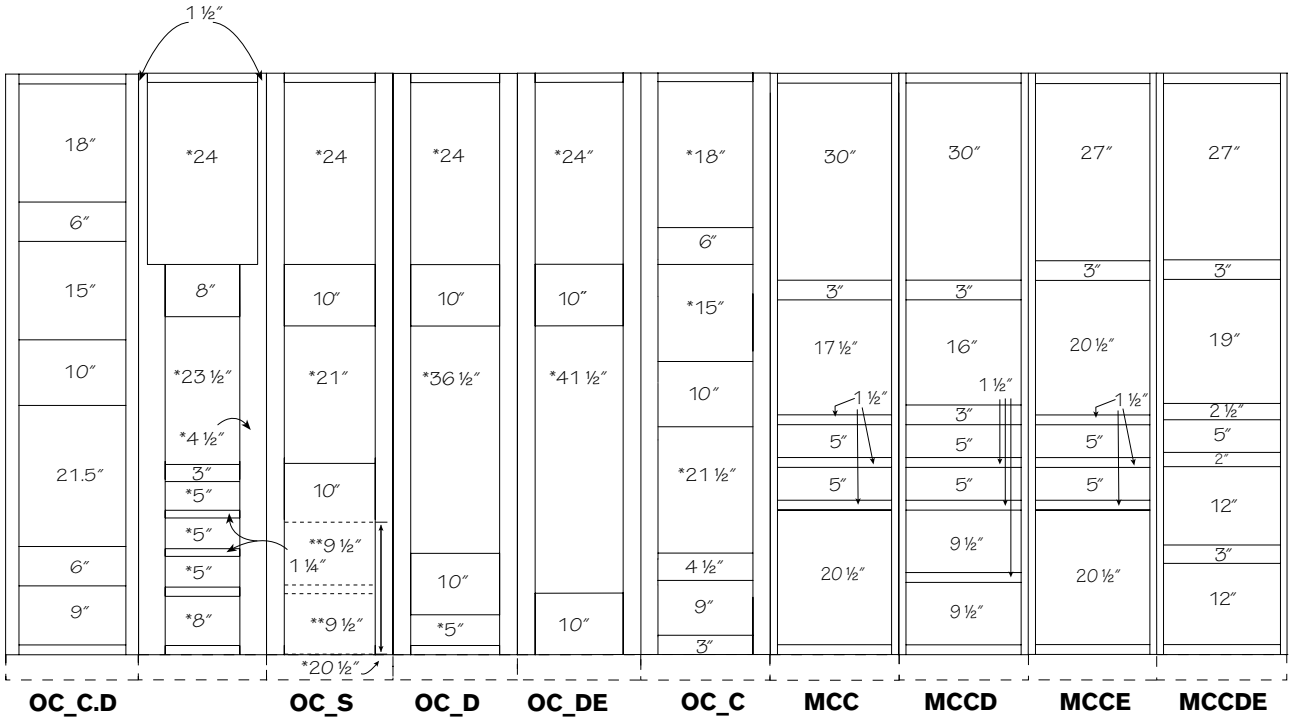

**Dotted lines show drawer heights for •2D

- Unless otherwise noted, all stiles and rails are 1 1/2"
- 3" vertical stiles divide double door cabinets over 36" wide
- Unless noted, oven cabinets have 3" vertical stiles
- Opening sizes are preceded by an asterisk (*)
- Toe kick depth is 3 1/8"
- Drawer fronts will not align with one another when using 3 drawer and 4 drawer stack cabinets side-by-side
- ***Note***: Unless noted, cabinet depth does ***not*** include doors or drawer fronts

Material dimensions listed may vary slightly from actual dimensions of the product

Frame Dimensions–96" H

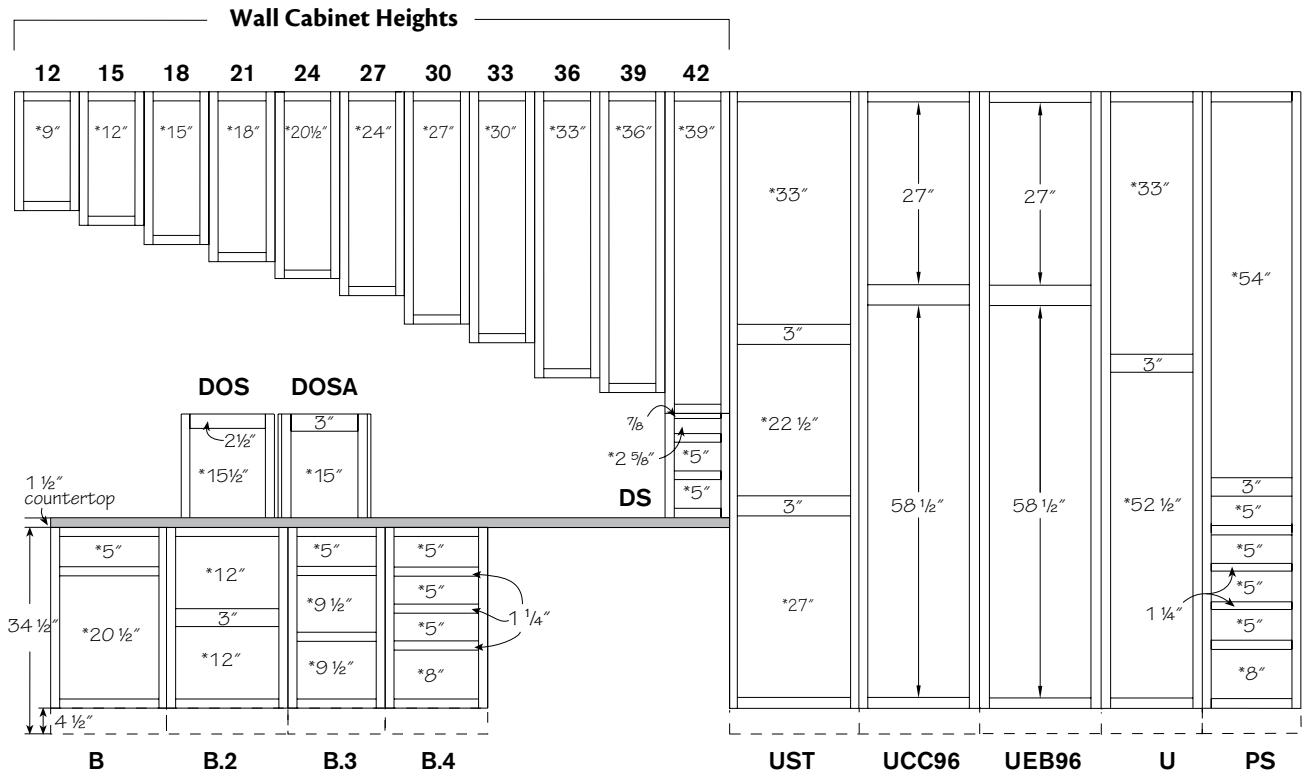

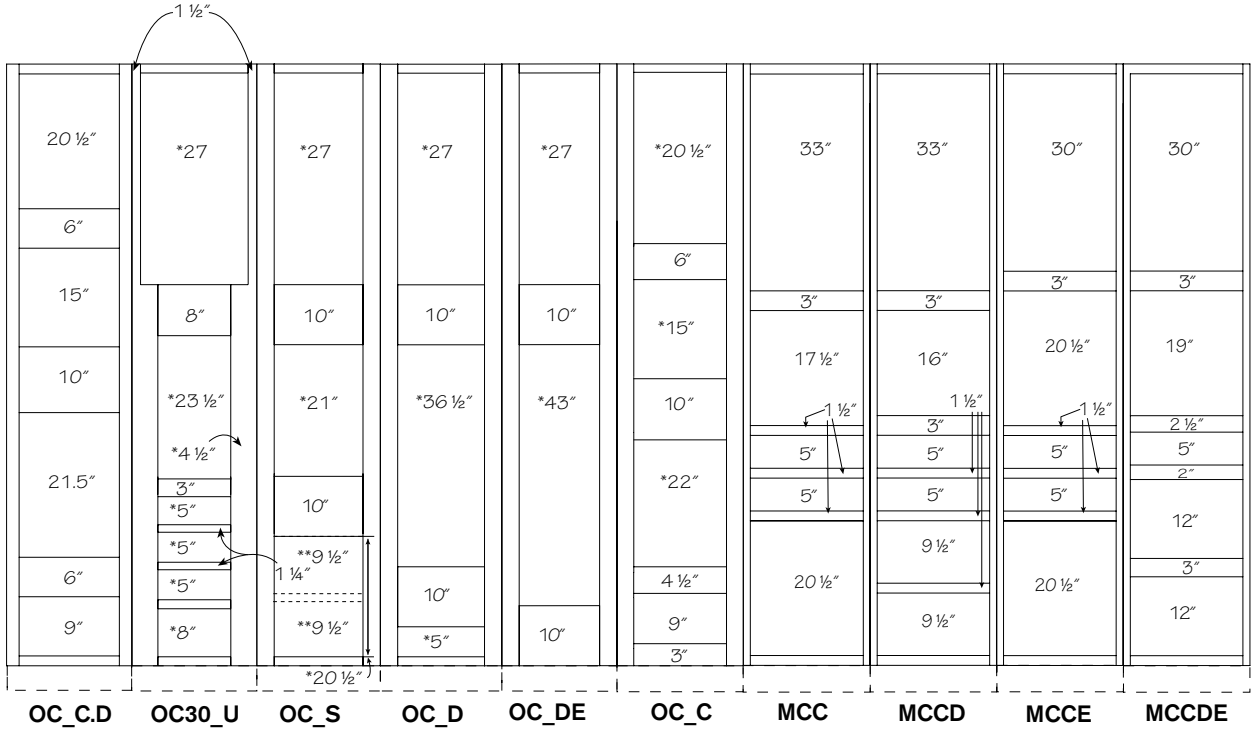

***Dotted lines show drawer heights for •2D*

- Unless otherwise noted, all stiles and rails are 1 1/2″
- 3″ vertical stiles divide double door cabinets over 36″ wide
- Unless noted, oven cabinets have 3″ vertical stiles
- Opening sizes are preceded by an asterisk (*)
- Toe kick depth is 3 1/8″
- Drawer fronts will not align with one another when using 3 drawer and 4 drawer stack cabinets side-by-side
- Note: Unless noted, cabinet depth does not include doors or drawer fronts

Material dimensions listed may vary slightly from actual dimensions of the product

Frame Dimension–102" H

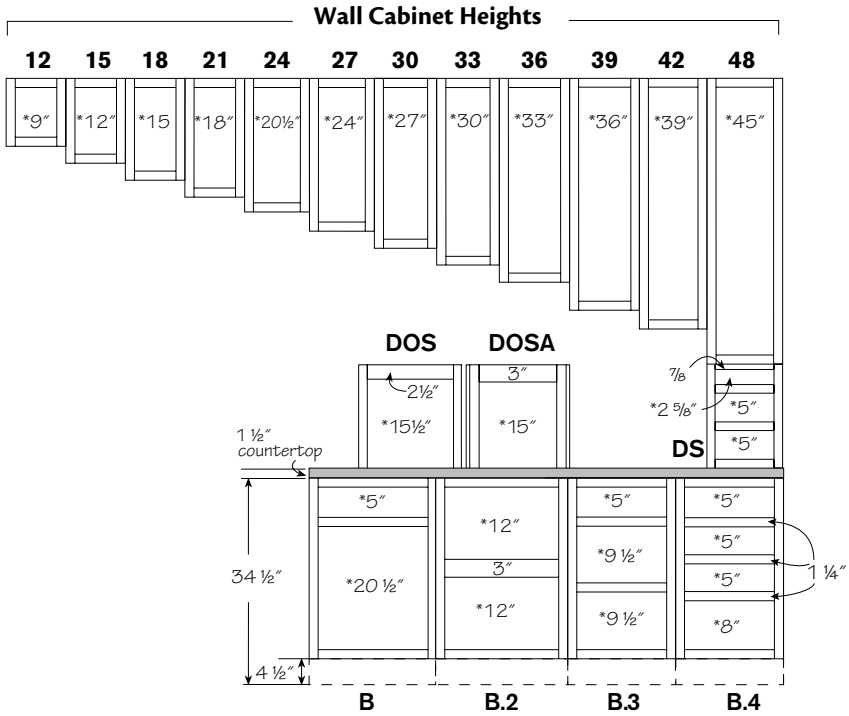

- Unless otherwise noted, all stiles and rails are 1 1/2"
- 3" vertical stiles divide double door cabinets over 36" wide
- Unless noted, oven cabinets have 3" vertical stiles
- Opening sizes are preceded by an asterisk (*)
- Toe kick depth is 3 1/8"
- Drawer fronts will not align with one another when using 3 drawer and 4 drawer stack cabinets side-by-side
- ***Note***: Unless noted, cabinet depth does ***not*** include doors or drawer fronts

Frame Dimension–108" H

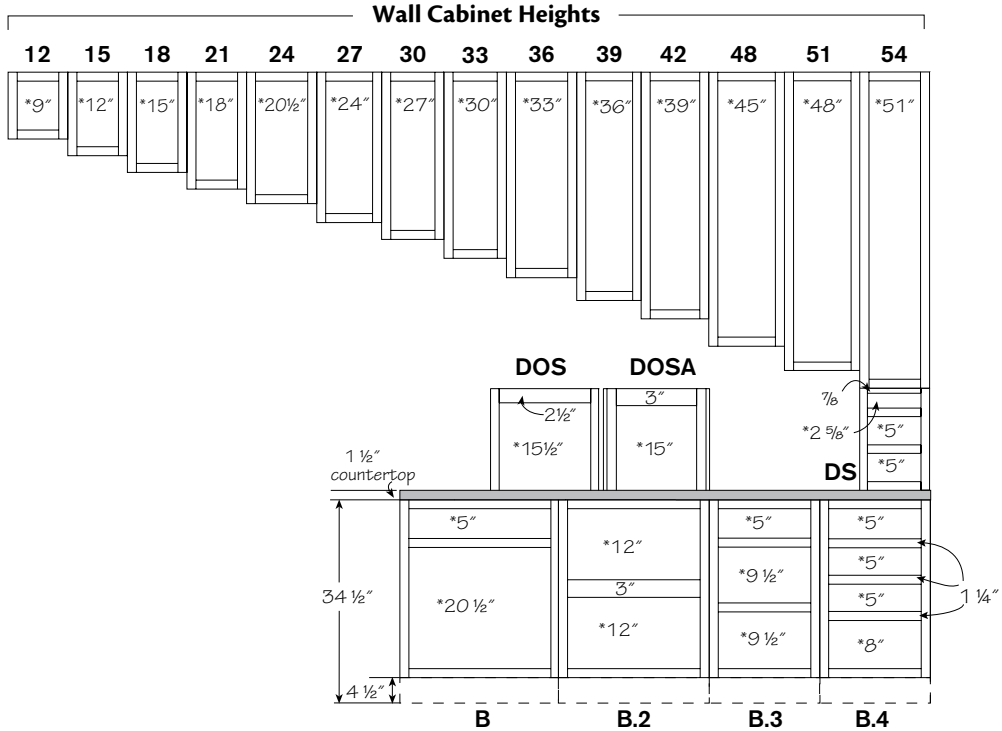

- Unless otherwise noted, all stiles and rails are 1 1/2"
- 3" vertical stiles divide double door cabinets over 36" wide
- Unless noted, oven cabinets have 3" vertical stiles
- Opening sizes are preceded by an asterisk (*)
- Toe kick depth is 3 1/8"
- Drawer fronts will not align with one another when using 3 drawer and 4 drawer stack cabinets side-by-side
- ***Note***: Unless noted, cabinet depth does ***not*** include doors or drawer fronts

Material dimensions listed may vary slightly from actual dimensions of the product

Vanity Frame Dimensions

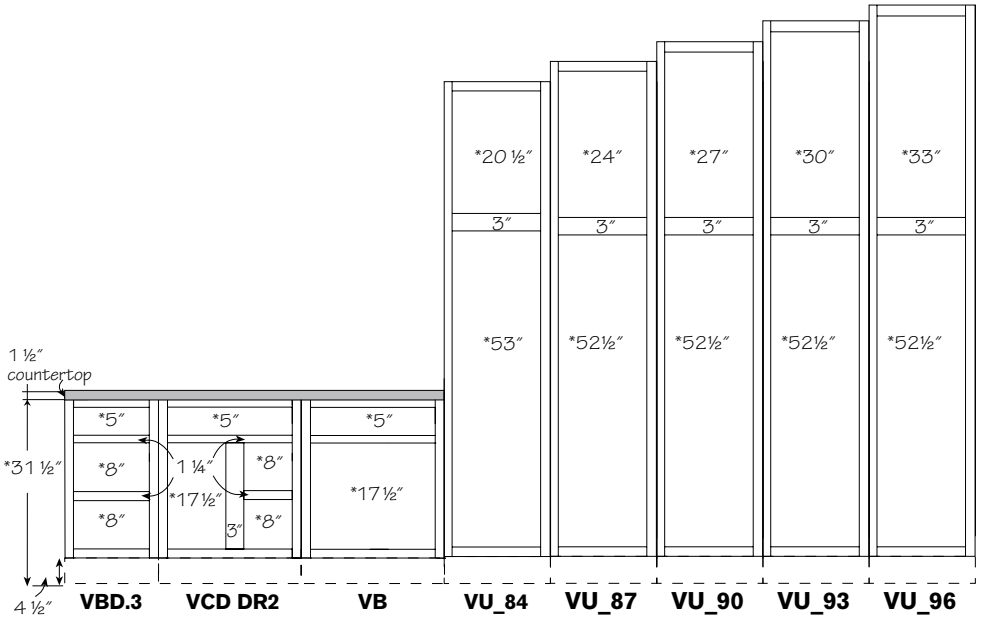

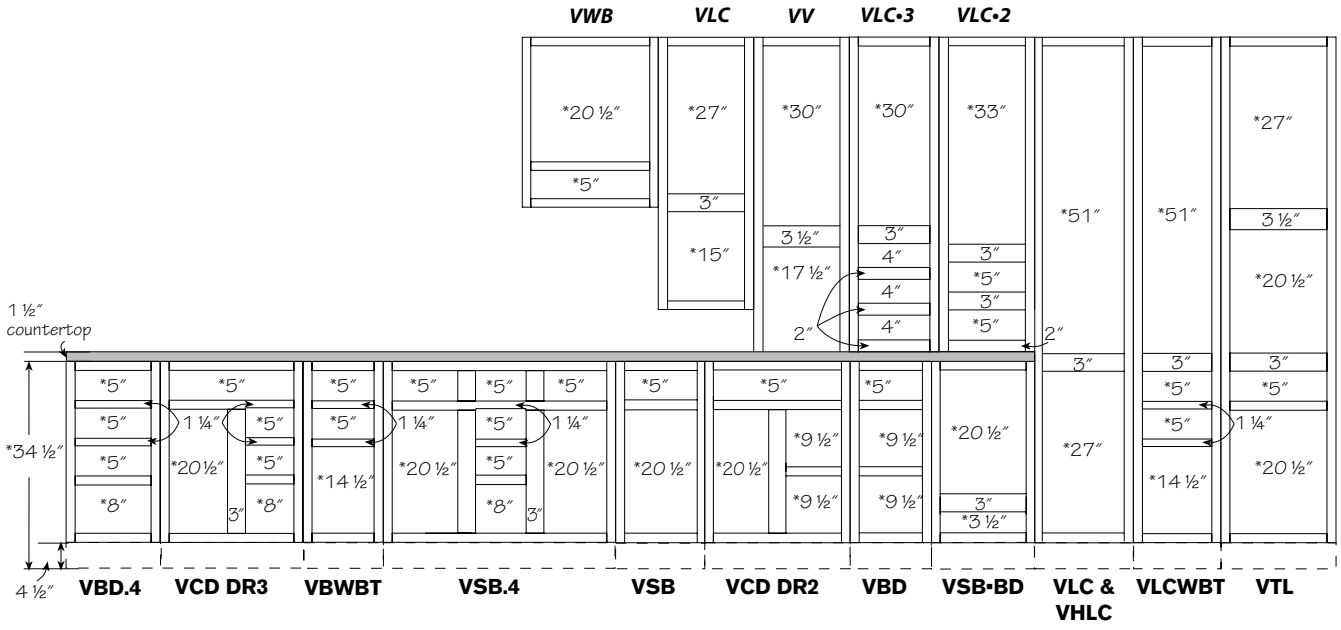

- Unless otherwise noted, all stiles and rails are 1 1/2″
- 3″ vertical stiles divide double door cabinets over 36″ wide
- Opening sizes are preceded by an asterisk (*)
- Toe kick depth is 3 1/8″
- Drawer fronts will not align with one another when using 3 drawer and 4 drawer stack cabinets side-by-side
- ***Note***: Unless noted, cabinet depth does ***not*** include doors or drawer fronts

Material dimensions listed may vary slightly from actual dimensions of the product

Office Frame Dimensions

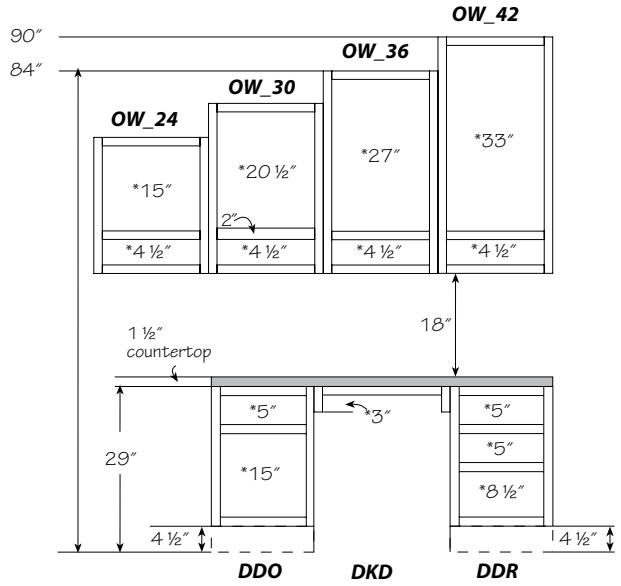

- Unless otherwise noted, all stiles and rails are 1 1/2″
- 3″ vertical stiles divide double door cabinets over 36″ wide
- Opening sizes are preceded by an asterisk (*)
- Toe kick depth is 3 1/8″
- ***Note***: Unless noted, cabinet depth does ***not*** include doors or drawer fronts

Furniture Base Frame Dimensions–84” H

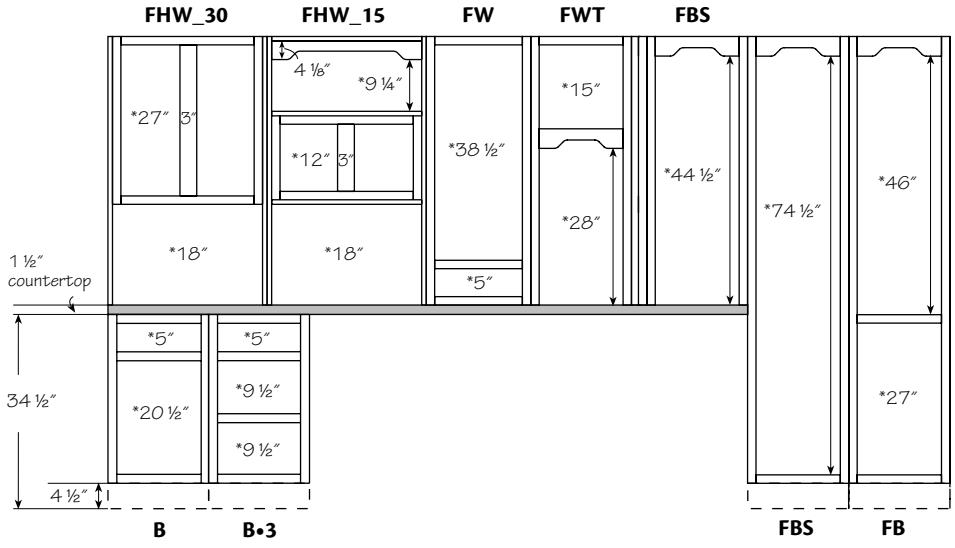

- Unless otherwise noted, all stiles and rails are 1 1/2″
- 3″ vertical stiles divide double door cabinets over 36″ wide
- Unless noted, all furniture valances are 3 1/2″ high
- Opening sizes are preceded by an asterisk (*)
- Toe kick depth is 3 1/8″
- ***Note***: Unless noted, cabinet depth does ***not*** include doors or drawer fronts

Material dimensions listed may vary slightly from actual dimensions of the product

Furniture Desk Frame Dimensions–84" and 87" H

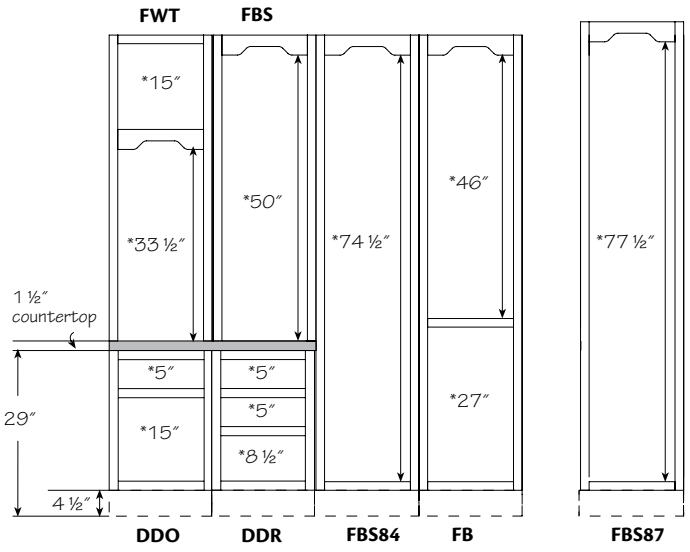

- Unless otherwise noted, all stiles and rails are 1 1/2″
- 3″ vertical stiles divide double door cabinets over 36″ wide
- Unless noted, all furniture valances are 3 1/2″ high
- Opening sizes are preceded by an asterisk (*)
- Toe kick depth is 3 1/8″
- ***Note***: Unless noted, cabinet depth does ***not*** include doors or drawer fronts

Furniture Frame Dimensions–90" and 93" H

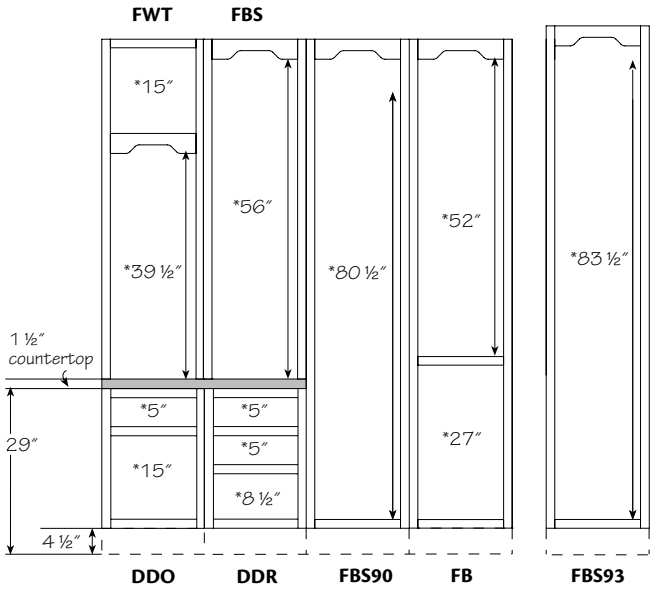

- Unless otherwise noted, all stiles and rails are 1 1/2″
- 3″ vertical stiles divide double door cabinets over 36″ wide
- Unless noted, all furniture valances are 3 1/2″ high
- Opening sizes are preceded by an asterisk (*)
- Toe kick depth is 3 1/8″
- ***Note***: Unless noted, cabinet depth does ***not*** include doors or drawer fronts

Material dimensions listed may vary slightly from actual dimensions of the product

Furniture Frame Dimensions–96" H

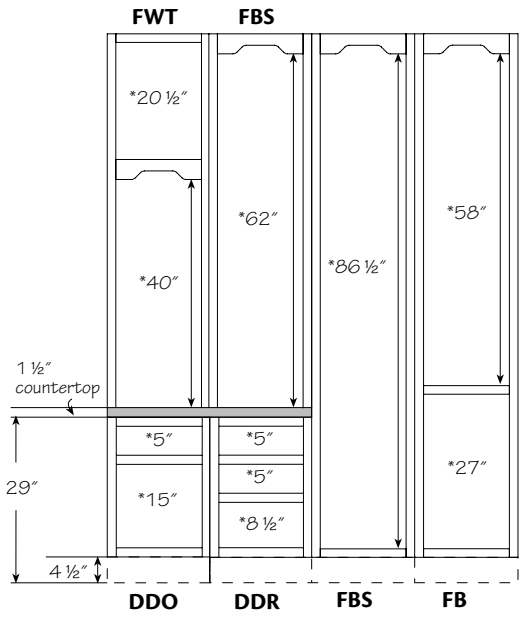

- Unless otherwise noted, all stiles and rails are 1 1/2"
- 3" vertical stiles divide double door cabinets over 36" wide
- Unless noted, all furniture valances are 3 1/2" high
- Opening sizes are preceded by an asterisk (*)
- Toe kick depth is 3 1/8"
- Note: Unless noted, cabinet depth does not include doors or drawer fronts

Passport Frame Dimensions

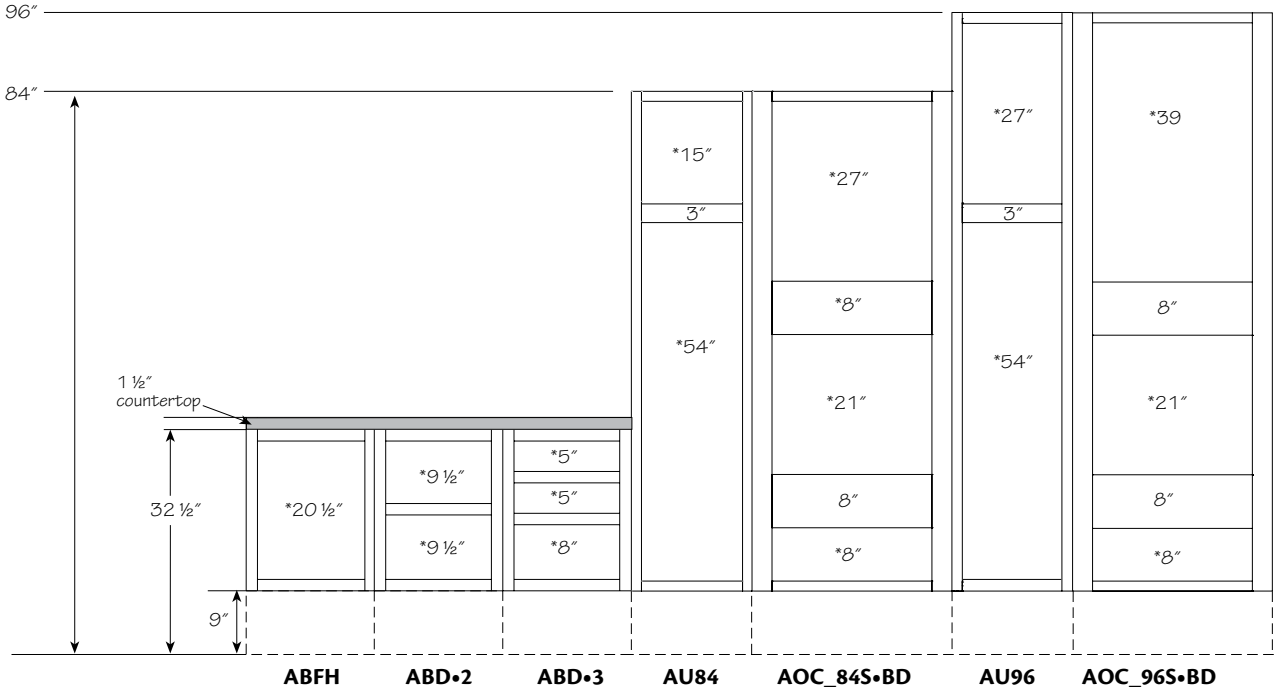

- Unless otherwise noted, all stiles and rails are 1 1/2"
- 3" vertical stiles divide double door cabinets over 36" wide
- Opening sizes are preceded by an asterisk (*)
- Unless noted, oven cabinets have 3" vertical stiles
- Toe kick depth is 6"
- ***Note***: Unless noted, cabinet depth does ***not*** include doors or drawer fronts

Material dimensions listed may vary slightly from actual dimensions of the product

Construction Options

Construction Options and Modifications

- ❖ Included as standard
- ● Available with an upcharge
- ☆ Available with exceptions
- (Blank) ***Not*** available

PE	Plywood Ends
APC	All Plywood Construction
APFC	All Plywood Furniture Construction
FPEB	Furniture Plywood Ends
MI	Matching Interior
DE	Integrated Decorative End
OE	Operational End
AD_E	Attached Decorative End
CW	Change Width
RD	Reduced Depth
ID	Increased Depth
CH	Change Height
IF	Inverted Frame
TWR	Top Wide Rail
WR	Wide Bottom Rail
XS	Extended Stile
XSG	Integrated Extended Stile
GD	Glass Doors
RTK	Recessed Toe Kick
RTKP	Recessed Toe Kick Peninsula
TKD	Toe Kick Drawer

Use the option availability chart at the right of each item to determine which construction options are available for your desired cabinet.

Material dimensions listed may vary slightly from actual dimensions of the product.

Specification subject to change without notice.

KraftMaid® Cabinetry Utilizes Some of the Best Materials Available to Build the Highest Quality Cabinets.
At KraftMaid® we continuously strive to provide products of the highest quality for all rooms of the home. In order to fulfill our commitment to quality, you may see some material changes in some of the plywood components that we use. The material changes will help reduce warping, expansion and contraction within the parts.

What Is In Some Of Our Plywood?
Multiple layers of wood materials, including wood veneers and medium density fiberboard (MDF), are used to create a hybrid product containing the following benefits:

· Improved Strength and Finish Quality: Reduces expansion or contraction, which is better for a smooth, quality finish. This process also produces a more rigid product.

· Environmentally Friendly: Supports CARB II standards. (CARB, or California Air Resource Board, is a control measure for reduced formaldehyde emissions from composite wood products).

Regardless of the wood material used in the various applications of our All Plywood Construction, you can feel confident that KraftMaid Cabinetry always uses some of the highest quality materials available to help ensure durable and long-lasting cabinets.

Note: According to the Department of Commerce, the core of hardwood and decorative plywood consists of a layer or layers of one or more material(s) that are situated between the face and back veneers. The core may be composed of a range of materials, including but ***not*** limited to veneers, particleboard, engineered wood and medium density fiberboard (MDF).

Plywood Ends

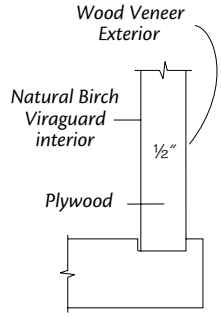

PE Full Kitchens
PEB Individual Cabinets

● PE	CH
APC	IF
APFC	TWR
FPEB	WR
MI	XS
DE	XSG
OE	GD
AD_E	RTK
CW	RTKP
RD	TKD
ID	

- This construction option affects end panels only
- Available for full or partial kitchen orders
- 1/2" plywood end panels are available for most cabinets
- Consult the Plywood Ends (PE) option box for your desired cabinet
- End panels only are 1/2" plywood with wood veneer exterior and Natural Birch Viraguard interior
- Shelves, ceilings and floors are engineered wood with Viraguard
- To order a full kitchen with Plywood Ends, use PE in the header of your order
- To order individual line items with Plywood Ends, dash each line item with PEB; Order Example: W3030-PEB
- Unless noted, plain sawn end panels will be supplied for quartersawn door styles
- Plywood End Panels do ***not*** receive glaze detailing
- Painted hardwood supplied for EverCore™

All Plywood Construction with 1/2" End Panels

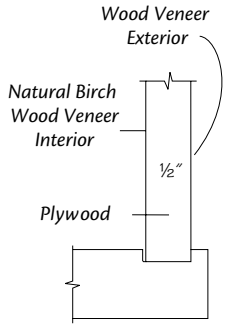

APC Full Kitchens

AP Individual Cabinets

	PE	CH
●	APC	IF
	APFC	TWR
	FPEB	WR
	MI	XS
	DE	XSG
	OE	GD
	AD_E	RTK
	CW	RTKP
	RD	TKD
	ID	

- This construction option is available for full or partial kitchen orders
- All Plywood Construction (APC) option with 1/2" End Panels is available for most cabinets
- Consult All Plywood Construction (APC) option box for your desired cabinet construction
- This All Plywood option features:
  - 1/2" plywood floors, ceilings, end panels, I-beams and toe kicks
  - 3/4" plywood base, wall and tall shelves
  - 3/8" plywood base back panel
  - 3/16" plywood wall back panel and drawer bottoms
  - Hanging rail may be plywood or solid wood
  - Toe kick support blocks are ***not*** plywood
- Unless noted, plain sawn end panels will be supplied for quartersawn door styles
- Plywood End Panels do ***not*** receive glaze detailing
- ***Note:*** To get All Plywood Construction with 3/4" (Furniture) Plywood Ends use APFC with APC. Order Example W3030BUTT-APFC, B12L-APFC (Refer to the APFC section for additional details on this option)
- ***Note:*** To get All Plywood Construction on individual cabinets, each line ***must*** be dashed with AP. Order Example: W3030-AP
- ***Note:*** To get All Plywood Construction with Matching Interior on individual cabinets use MIP. Order Example W3030BUTT-MIP, B12L-MIP (Refer to the MIP section for additional details on this option)
- ***Note:*** To get All Plywood Construction with 3/4" (Furniture) Plywood Ends and Matching Interior on individual cabinets use MIAPFC. Order Example W3030BUTT-MIAPFC, B12L-MIAPFC (Refer to the MIAPFC section for additional details on this option)

All Plywood Construction with 3/4" (Furniture) End Panels

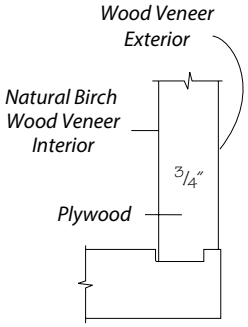

APFC Individual Cabinets

	PE	CH
	APC	IF
●	APFC	TWR
	FPEB	WR
	MI	XS
	DE	XSG
	OE	GD
	AD_E	RTK
	CW	RTKP
	RD	TKD
	ID	

- This construction option affects end panels only
- An All Plywood Construction with 3/4" (Furniture) End Panels option is available for most cabinets
- Consult All Plywood Furniture Construction option box (APFC) for your desired cabinet
- This All Plywood option features:
  - 3/4" plywood end panels
  - 1/2" plywood floors, ceilings, I-beams and toe kicks
  - 3/4" plywood base, wall and tall shelves
  - 3/8" plywood base and tall back panel
  - 3/16" plywood wall back panel, furniture back panel and drawer bottoms
  - Hanging rail may be plywood or solid wood
  - Toe kick support blocks are ***not*** plywood
- Unless noted, plain sawn end panels will be supplied for quartersawn door styles
- Plywood End Panels do ***not*** receive glaze detailing
- Painted hardwood supplied for EverCore™
- ***Note:*** To get All Plywood Construction with 3/4" (Furniture) Plywood Ends on individual cabinets use APFC. Order Example W3030BUTT-APFC, B12L-APFC

Furniture Plywood Ends

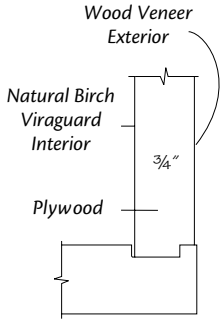

FPEB Individual Cabinets

	PE	CH
	APC	IF
	APFC	TWR
●	FPEB	WR
	MI	XS
	DE	XSG
	OE	GD
	AD_E	RTK
	CW	RTKP
	RD	TKD
	ID	

- This construction option affects end panels only
- 3/4" Furniture Plywood End (FPEB) panels are available for most cabinets
- Consult Furniture Plywood Ends (FPEB) option box for your desired cabinet
- End panels only are 3/4" plywood with wood veneer exterior and Natural Birch Viraguard interior
- Shelves, ceilings and floors are engineered wood with Viraguard
- To order individual line items with Furniture Plywood Ends, dash each line item with FPEB; Order Example: W3030-FPEB, WEP3•30L-FPEB
- Unless noted, plain sawn end panels will be supplied for quartersawn door styles
- Plywood End Panels do ***not*** receive glaze detailing
- Painted hardwood supplied for EverCore™
- ***Note:*** To get All Plywood Construction with 3/4" (Furniture) Plywood Ends use APFC with APC.

Order Example W3030BUTT-APFC, B12L-APFC (Refer to the APFC section for additional details on this option)

Matching Interior Standard Construction–Viraguard

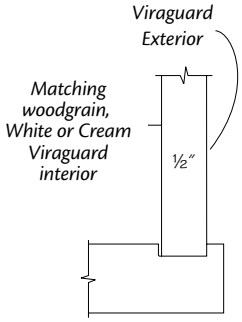

MIV Individual Cabinets

	PE	CH
	APC	IF
	APFC	TWR
	FPEB	WR
●	MI	XS
	DE	XSG
	OE	GD
	AD_E	RTK
	CW	RTKP
	RD	TKD
	ID	

- A Matching Interior option is recommended for all cabinets having glass doors
- Consult Matching Interior (MI) option box for availability for your desired cabinet
- If an item shows MI as standard in the option boxes, the matching interior material will be Viraguard unless that item's standard construction is All Plywood (APC), Wood Veneer or Furniture Plywood Ends (FPEB, APFC). This includes cabinets ordered as unfinished
- Inside of face frame is unfinished
- This option includes: • 1/2" end panels with matching Viraguard exterior and interior
  - 3/4" matching Viraguard shelves on satin chrome furniture shelf rests
  - Matching Viraguard for ceilings and floors
- You ***must*** use MIP, MIFP or MIAPFC to get a wood veneer matching interior
- Unless noted, plain sawn end panels will be supplied for quartersawn door styles
- Natural Birch and Natural Maple door styles with standard end panels are supplied standard with a Natural Birch Viraguard interior. It is ***not*** necessary to order Matching Interior
- Painted hardwood supplied for EverCore™

Matching Interior with 1/2" Plywood End Panels

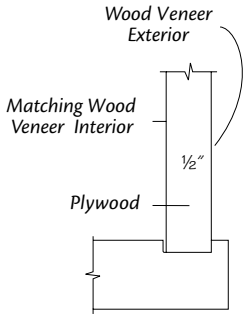

PE	CH
APC	IF
APFC	TWR
FPEB	WR
● MI	XS
DE	XSG
OE	GD
AD_E	RTK
CW	RTKP
RD	TKD
ID	

MIP Individual Cabinets

- A Matching Interior Plywood option is available for individual items in a kitchen
- A Matching Interior option is recommended for all cabinets having glass doors
- Consult Matching Interior (MI) option box for availability for your desired cabinet
- Inside of face frame is unfinished
- This option includes:
  - 1/2" plywood end panels with matching wood veneer exterior and interior
  - 3/4" plywood shelves with matching wood veneer on satin chrome shelf rests
  - 1/2" plywood with matching wood veneer for ceilings and floors
  - 3/8" plywood base and tall back panel with matching wood veneer
  - 3/16" plywood wall and furniture back panel
- To order individual line items with Matching Interior you ***must*** have each line item dashed with the appropriate codes MIP (Order Example: W3030-MIP, WEP3•30L-MIP)
- Unless noted, plain sawn end panels will be supplied for quartersawn door styles
- Painted hardwood supplied for EverCore™
- ***Note:*** To get Matching Interior Furniture Plywood Ends with All Plywood Construction use MIAPFC

Matching Interior with 3/4" (Furniture) End Panels on All Plywood (APC) Orders

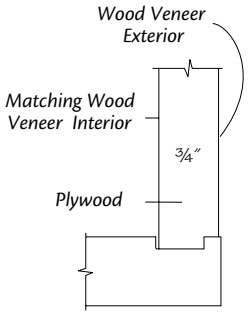

PE	CH
APC	IF
APFC	TWR
FPEB	WR
● MI	XS
DE	XSG
OE	GD
AD_E	RTK
CW	RTKP
RD	TKD
ID	

MIAPFC Individual Cabinets

- A Matching Interior All Plywood Furniture option is available for individual items in a kitchen
- A Matching Interior option is recommended for all cabinets having glass doors
- Consult Matching Interior (MI) option box for availability for your desired cabinet
- Inside of face frame is unfinished
- This option includes:
  - 3/4" plywood end panels with matching wood veneer exterior and interior
  - 3/4" plywood shelves with matching wood veneer on satin chrome shelf rests
  - 1/2" plywood with matching wood veneer for ceilings and floors.
  - 3/8" plywood base and tall back panel with matching wood veneer
  - 3/16" plywood with matching wood veneer wall and furniture back panel
- To order a full kitchen with Matching Interior (MI), you ***must*** have each line item dashed with MIAPFC.

Order Example: W3030-MIAPFC, WEP3•30L-MIAPFC

- Unless noted, plain sawn end panels will be supplied for quartersawn door styles
- Painted hardwood supplied for EverCore™

Matching Interior with 3/4" Furniture Plywood End Panels

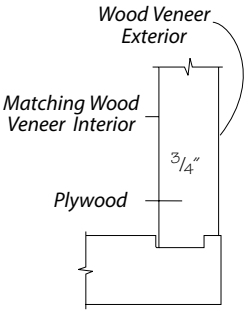

PE	CH
APC	IF
APFC	TWR
FPEB	WR
● MI	XS
DE	XSG
OE	GD
AD_E	RTK
CW	RTKP
RD	TKD
ID	

MIFP Individual Cabinets

- A Matching Interior Furniture Plywood option is available for individual items in a kitchen
- A Matching Interior option is recommended for all cabinets having glass doors
- Consult Matching Interior (MI) option box for availability for your desired cabinet
- Inside of face frame is unfinished
- This option includes:
  - 3/4" plywood end panels with matching wood veneer exterior and interior
  - 3/4" engineered wood with matching wood veneer shelves on satin chrome shelf rests
  - 1/2" engineered wood with matching wood veneer for ceilings and floors
  - 3/16" plywood with matching wood veneer wall back panel
- To order individual line items with matching interior you ***must*** have each line item dashed with MIFP

Order Example: W3030BUTT-MIFP, WEP3•30L-MIFP

- Unless noted, plain sawn end panels will be supplied for quartersawn door styles
- Painted hardwood supplied for EverCore™
- ***Note:*** To get Matching Interior Furniture Plywood Ends with All Plywood Construction use MIAPFC

Wood Veneer Construction

- KraftMaid® manufactures certain cabinets with Wood Veneer Construction standard. See specific cabinet for details. Depending on the item, this may consist of a solid hardwood, plywood or engineered wood core that has solid wood veneer on both sides and is finished to match

Ordering Specifications for Plywood Options

	Entire Kitchen	Individual Cabinets
Plywood Ends	**PE** Use PE in the header of your written order. Every cabinet on this order will receive PE. Use Styles & Pricing in 20-20 to choose PE.	**PEB (Plywood Ends Both)** Each line item must be dashed with PEB. Order Example: W3030-PEB. In 20-20, use Attachments to apply PEB to each cabinet.
	with Matching Interior	
	Matching Interior nomenclature is only available for individual cabinets. There is no nomenclature to order a full kitchen with Matching Interior Plywood. See individual cabinet instructions.	**MIP (Matching Interior Plywood)** Each line item must be dashed with MIP. Order Example: W3030-MIP. In 20-20, use Attachments to apply MIP to each cabinet.
Furniture Ends	Furniture Ends nomenclature is only available for individual cabinets. There is no nomenclature to order a full kitchen with Furniture Ends. See individual cabinet instructions.	**FPEB (Furniture Plywood Ends Both)** Each line item must be dashed with FPEB. Order Example: W3030-FPEB. In 20-20, use Attachments to apply FPEB to each cabinet.
	with Matching Interior	
	Matching Interior nomenclature is only available for individual cabinets. There is no nomenclature to order a full kitchen with Matching Interior Furniture Plywood. See individual cabinet instructions.	**MIFP (Matching Interior Furniture Plywood)** Each line item must be dashed with MIFP. Order Example: W3030-MIFP. In 20-20, use Attachments to apply MIFP to each cabinet.
All Plywood Construction	**APC** Use APC in the header of your written order. Every cabinet on this order will receive APC. Use Styles & Pricing in 20-20 to choose APC.	**AP (All Plywood)** Each line item must be dashed with AP. Order Example: W3030-AP. In 20-20, use Add-ons to apply AP to each cabinet.
	with Matching Interior	
	Matching Interior nomenclature is only available for individual cabinets. There is no nomenclature to order a full kitchen with Matching Interior All Plywood. See individual cabinet instructions.	**MIP (Matching Interior Plywood)** Each line item must be dashed with MIP. Order Example: W3030-MIP. In 20-20, use Attachments to apply MIP to each cabinet.
All Plywood Construction with Furniture Ends	All Plywood Construction with Furniture Ends nomenclature is only available for individual cabinets. There is no nomenclature to order a full kitchen with All Plywood Construction Furniture Ends. See individual cabinet instructions.	**APFC (All Plywood Furniture Ends Both)** Use APC in the header of your written order and each line item must be dashed with APFC. Order Example: W3030-APFC. In 20-20, use Styles & Pricing to choose APC, then use Attachments to apply APFC to each cabinet.
	with Matching Interior	
	Matching Interior nomenclature is only available for individual cabinets. There is no nomenclature to order a full kitchen with Matching Interior Furniture All Plywood. See individual cabinet instructions.	**MIAPFC (Matching Interior All Plywood Furniture Ends)** Use APC in the header of your written order and each line item must be dashed with MIAPFC. Order Example: W3030-MIAPFC. In 20-20, use Styles & Pricing to choose APC, then use Attachments to apply MIAPFC to each cabinet.

Construction Option Comparison Chart

Feature	Description	Standard Construction	Plywood Ends	APC	FPEB	APFC
Face Frame	3/4" solid hardwood	●	●	●	●	●
End Panel Construction	1/2" 45 lb. engineered wood	●				
	1/2" plywood		●	●		
	3/4" plywood				●	●
End Panel Finish	2 mil Viraguard both sides	●				
	Matching Viraguard interior (Open cabinets)	●	●			
	Matching wood veneer interior (Furniture cabinets and WA27)	●	●	●	●	●
	2 mil Viraguard interior and wood veneer exterior		●		●	
	Birch wood veneer interior and matching wood veneer exterior			●		●
Floor and Tops	1/2" 45 lb. engineered wood	●	●		●	
	1/2" plywood			●		●
Wall Backs	1/8" engineered wood with 2 mil Viraguard interior	●	●		●	
	3/16" matching wood veneer (Furniture and open cabinets)		●	●	●	●
	3/16" plywood with birch wood veneer			●		●
	3/8" V-groove wood veneer (Beaded frame country cabinets)	●	●	●	●	●
Base & Tall Back	3/8" 45 lb. engineered wood with 2 mil Viraguard interior	●	●		●	
	3/16" matching wood veneer (Furniture cabinets)	●	●	●	●	●
	3/8" V-groove wood (Beaded frame country cabinets)	●	●	●	●	●
	3/8" plywood with birch wood veneer			●		●
	1/8" engineered wood with 2 mil Viraguard Interior (Easy Reach and Base Angle cabinets)	●	●		●	
	3/16" plywood with birch wood veneer (Easy Reach and Base Angle cabinets)			●		●
Hanging Rails	3/4" solid wood base rails and 1⁄2" solid wood wall rails	●	●	●	●	●
Toe Kicks	1/2" 45 lb. engineered wood recessed into end panels	●	●		●	
	1/2" plywood with birch wood veneer			●		●
Corner Blocks I-Beam Braces	1/2" engineered wood, MDF or plywood dadoed into face frame, end panels and back hanging rails	●	●	●	●	●
Shelves	3/4" 45 lb. Evercore™ Wood with 2 mil Viraguard and vinyl edgeband. Fully adjustable	●	●		●	
	3/4" wood veneer with prefinished edgeband. Fully adjustable. (Furniture cabinets)	●	●		●	
	3/4" plywood with birch wood veneer and edgeband. Fully adjustable			●		●
Drawers	3/4" Hardwood four sided dovetail drawer box with 3/16" plywood floor	●	●	●	●	●
Drawer Runners	Full extension ball bearing undermount with 90 lb. load capacity, self-closing design and controlled closing mechanism	●	●	●	●	●
Hinges	Whisper Touch™ soft closing, quiet, six-way adjustable hinge or knife hinge	●	●	●	●	●
Shelf Clips	Clear positive locking design	●	●	●	●	●
	Satin chrome shelf rests (Kitchen wall, open and furniture cabinets)	●	●	●	●	●
Wood Finish	DuraKraft™ Plus finish	●	●	●	●	●
Wood Species	Alder	●	●	●	●	●
	Birch	●	●	●	●	●
	Cherry	●	●	●	●	●
	Evercore™	●	●	●	●	●
	Hickory	●	●	●	●	●
	High Gloss Laminate		●	●	●	●
	Laminate		●	●	●	●
	Maple	●	●	●	●	●
	Oak	●	●	●	●	●
	Woodgrain Laminate		●	●	●	●

Back Option

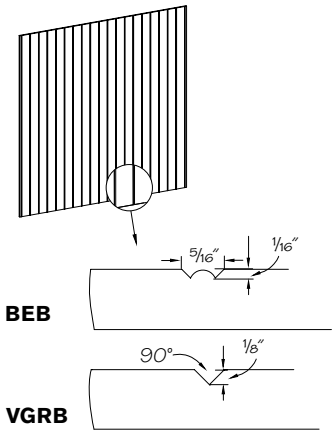

† **BEB** Beaded Back

VGRB V-groove Back

† Painted hardwood supplied for EverCore™

- All Base, Wall and open Furniture cabinets may be ordered with an interior 3/8" wood V-Groove or Beaded Back option, unless noted
- ***Not*** available on cabinets ordered with an Integrated Decorative End (DE) or Operational End (OE) options
- ***Not*** available in Wood-Grain Foil door styles
- ***Not*** available in Morristown; Melrose and Putnam supplied plain sawn
- Order Example: WOC2430-VGRB

	PE	CH
	APC	IF
❖	APFC	TWR
	FPEB	WR
❖	MI	XS
	DE	XSG
	OE	GD
	AD_E	RTK
	CW	RTKP
	RD	TKD
	ID	

Contrasting Back Option–Plain Back

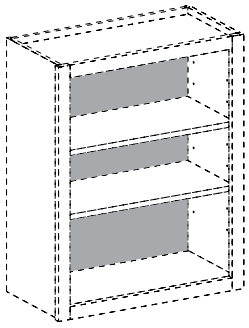

CPLB ▪A11	Mushroom Maple
CPLB ▪A21	Onyx Maple
CPLB ▪A60	Autumn Blush Cherry
CPLB ▪A70	Biscotti Maple
CPLB ▪A77	Cinnamon Cherry
CPLB ▪A78	Cinnamon Maple
CPLB ▪A80	Chocolate Cherry
CPLB ▪A88	Chestnut Maple
CPLB ▪A90	Cognac Cherry
CPLB ▪A92	Cognac Maple
CPLB ▪A98	Cabernet Cherry
CPLB ▪A99	Canvas Maple
CPLB ▪B04	Dove White Maple
CPLB ▪B09	Ginger Cherry w/Sable Glaze
CPLB ▪B11	Ginger Maple w/Sable Glaze
CPLB ▪B13	Honey Spice Cherry
CPLB ▪B15	Honey Spice Maple
CPLB ▪B19	Kaffé Cherry
CPLB ▪B28	Natural Cherry
CPLB ▪B30	Natural Maple
CPLB ▪B37	Peppercorn Cherry
CPLB ▪B41	Praline Maple
CPLB ▪B42	Sunset Cherry
CPLB ▪B65M	Greyloft Maple
CPLB ▪B69M	Midnight Maple
CPLB ▪B81C	Saddle Cherry
CPLB ▪B82C	Husk Cherry
CPLB ▪B83M	Pebble Maple
CPLB ▪C29M	Chai Maple

- All Base, Wall and open Furniture cabinets may be ordered with an interior wood Contrasting Back Option unless noted (use the appropriate back option)
- Contrasting back material is Cherry or Maple only, depending on finish. Option is available in all door styles
- Order Example: WOC3030-CPLB▪A70

	PE	CH
	APC	IF
❖	APFC	TWR
	FPEB	WR
❖	MI	XS
	DE	XSG
	OE	GD
	AD_E	RTK
	CW	RTKP
	RD	TKD
	ID	

Contrasting Back Option–Beaded Back

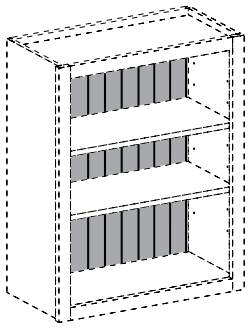

CBEB ▪A11	Mushroom Maple
CBEB ▪A12	Mushroom Maple w/Cocoa Glaze
CBEB ▪A15	Dove White w/Cocoa Glaze
CBEB ▪A21	Onyx Maple
CBEB ▪A45	Praline w/Onyx Glaze
CBEB ▪A48	Cinnamon Maple w/Onyx Glaze
CBEB ▪A49	Cinnamon Cherry w/Onyx Glaze
CBEB ▪A54	Chestnut Maple w/Onyx Glaze
CBEB ▪A56	Autumn Blush Cherry w/Onyx Glaze
CBEB ▪A58	Cabernet Cherry w/Onyx Glaze
CBEB ▪A60	Autumn Blush Cherry
CBEB ▪A70	Biscotti Maple
CBEB ▪A77	Cinnamon Cherry
CBEB ▪A78	Cinnamon Maple
CBEB ▪A80	Chocolate Cherry
CBEB ▪A88	Chestnut Maple
CBEB ▪A90	Cognac Cherry
CBEB ▪A92	Cognac Maple
CBEB ▪A98	Cabernet Cherry
CBEB ▪A99	Canvas Maple
CBEB ▪B02	Antique Chocolate Cherry w/Mocha Glaze
CBEB ▪B04	Dove White Maple
CBEB ▪B05	Chocolate Cherry w/Ebony Glaze
CBEB ▪B09	Ginger Cherry w/Sable Glaze
CBEB ▪B11	Ginger Maple w/Sable Glaze
CBEB ▪B13	Honey Spice Cherry
CBEB ▪B15	Honey Spice Maple
CBEB ▪B17	Biscotti Maple w/Cocoa Glaze
CBEB ▪B19	Kaffé Cherry
CBEB ▪B28	Natural Cherry
CBEB ▪B30	Natural Maple
CBEB ▪B37	Peppercorn Cherry
CBEB ▪B41	Praline Maple
CBEB ▪B42	Sunset Cherry
CBEB ▪B56	Canvas Maple w/Cocoa Glaze
CBEB ▪B65M	Greyloft Maple
CBEB ▪B69M	Midnight Maple
CBEB ▪B81C	Saddle Cherry
CBEB ▪B82C	Husk Cherry
CBEB ▪B83M	Pebble Maple
CBEB ▪C29M	Chai Maple

	PE	CH
	APC	IF
❖	APFC	TWR
	FPEB	WR
❖	MI	XS
	DE	XSG
	OE	GD
	AD_E	RTK
	CW	RTKP
	RD	TKD
	ID	

- All Base, Wall and open Furniture cabinets may be ordered with an interior 3/8" wood Contrasting Back Option unless noted (use the appropriate back option)
- Contrasting back material is Cherry or Maple only, depending on finish. Option is available in all door styles
- ***Not*** available on cabinets ordered with an Integrated Decorative End (DE) or Operational End (OE) options
- Order Example: WOC2430-CBEB▪A11

Contrasting Back Option–Leather Back

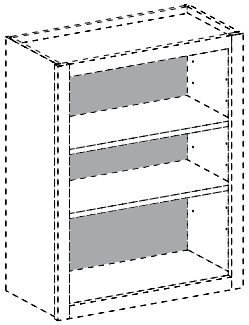

CPLB ▪COL Cognac Leather
CPLB ▪ONL Onyx Leather

- All Wall cabinets may be ordered with an interior Leather Contrasting Back Option unless noted (use the appropriate back option). Wall backs are 3/16" thick
- Order Example: WOC3030-CPLB▪ONL
- ***Note:*** Color coordination with Cognac stain will vary based on wood species

	PE	CH
	APC	IF
❖	APFC	TWR
	FPEB	WR
❖	MI	XS
	DE	XSG
	OE	GD
	AD_E	RTK
	CW	RTKP
	RD	TKD
	ID	

Cleaning Tip: Use a damp, well wrung out terry cloth or microfiber towel to wipe down the leather material

Integrated Decorative End

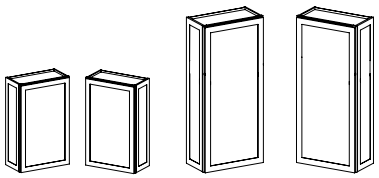

DWE.1 **DWE.2**

Specify R or L
Base

DBE B

34 1/2" H & 40" H; 12" & 24" D

DBE R or L

34 1/2" H & 40" H; 12" & 24" D

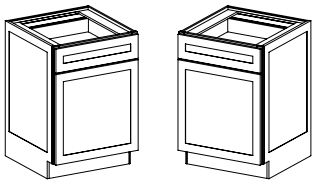

DBEL **DBER**

Tall/Furniture Book Shelves

DTE B

60 1/2", 84", 87", 90", 93", & 96" H; 12", 18", 21" & 24" D

DTE R or L

60 1/2", 84", 87", 90", 93", & 96" H; 12", 18", 21" & 24" D

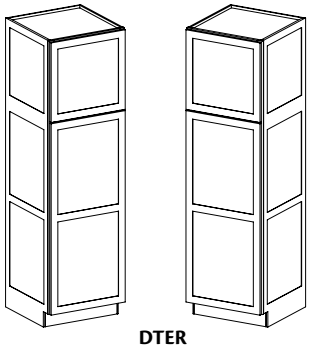

DTEL **DTER**

Vanity

DVE B

31 1/2" & 34 1/2" H; 18" & 21" D

DVE R or L

31 1/2" & 34 1/2" H; 18" & 21" D

Wall

DWE B▪1

12" H - 33" H

DWE B▪2

36" H - 54" H

DWE R or L▪1

12" H - 33" H

DWE R or L▪2

36" H - 54" H

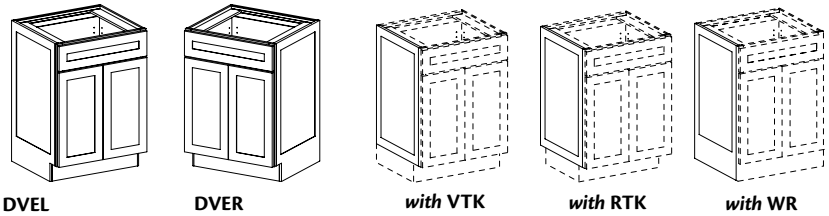

DVEL **DVER** ***with*** **VTK** ***with*** **RTK** ***with*** **WR**

	PE	CH
	APC	IF
	APFC	TWR
	FPEB	WR
	MI	XS
●	DE	XSG
	OE	GD
	AD_E	RTK
	CW	RTKP
	RD	TKD
	ID	

- Available in full overlay door styles only
- Available on select cabinets only
- The rail height on Integrated Decorative End will match rail height on the door
- The overall width of a cabinet will increase by 1/16", per end, when Integrated Decorative Ends are selected
- DWEB or any combination of Decorative Wall End and Wall Operational Ends (WOE) should only be used on Wall cabinets that are planned to be supported from underneath, placed on a floor, or placed on a countertop. Wall cabinets are ***not*** intended to be installed independently without additional support
- Toe kick notch will be standard construction with this option
- Veneer raised panel door styles will be supplied with a solid wood center panel machined to resemble the veneer center panel
- ***Not*** available in Thermofoil door styles
- ***Not*** available in slab door styles
- ***Not*** available in Wood-Grain Foil door styles
- Painted hardwood supplied for EverCore™
- ***Not*** available in Kendrick door styles
- ***Not*** available in Increased Depth (ID)
- ***Not*** available in Reduced Depth (RD)
- ***Not*** available with Wall Top Wide Rail (WTWR)
- ***Not*** available with Inverted Frame Option (IF)
- ***Note:*** Integrated Decorative Ends will have the selected finish on the interior and exterior of the integrated end. Other interior cabinet components will be natural unless a Matching Interior option is selected.
- Note: When (DBE) is used in combination with Peninsula cabinets, the working front drawer will be eliminated and replaced with a false front

Operational End

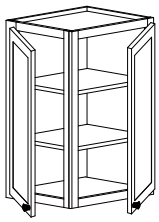

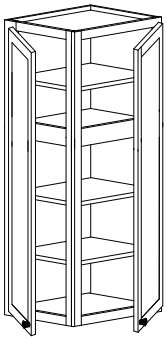

WOE_1 WOE_2

Specify R or L
Base

BOE R or L

BOE B

Tall

TOE R or L

Vanity

VOE R or L

VOE B

Wall
12"-33" H

WOE R or L•1

WOE B•1

36-54" H

WOE R or L•2

WOE B•2

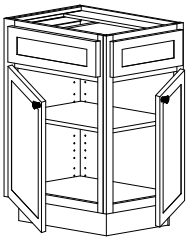

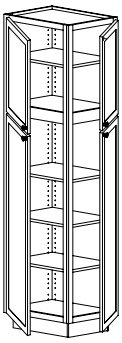

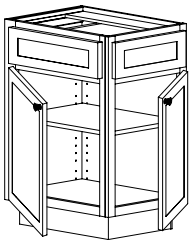

BOE TOE VOE

PE	CH
APC	IF
APFC	TWR
FPEB	WR
MI	XS
DE	XSG
● OE	GD
AD_E	RTK
CW	RTKP
RD	TKD
ID	

- Operational End (OE) will be attached to 2 1/2" frame stiles
- ***Not*** available on both ends of Tall cabinets
- Stacking configuration of Operational End (OE) will mimic the face of the selected cabinet; BUTT doors are ***not*** provided, single hinged door only
- Recessed Toe Kick (RTK) is standard on Base, Tall and Vanity cabinets
- Change Width (CW) can be used in combination with these construction options
- Change Height (CH) can be used in combination with these construction options
- If Wide Rail (WR) is selected, the side and front will have a wide rail
- Matching Interior (MI) is ***not*** standard but can be added as an option
- ***Not*** available on Peninsula cabinets, Wine Cabinets, Lattice Cabinets, Tambour Cabinets, Appliance Cabinets with Appliance Opening or Cabinets containing Rollout Trays (ROT)
- Operational End (OE) is ***not*** available with Increased Depth (ID) or Reduced Depth (RD) options
- Wall Operational End - Both (WOE.B) or any combination of Wall Operational Ends & Decorative Wall Ends (DWE_) should only be used on wall cabinets that are planned to be supported from underneath, placed on a floor or placed on a counter top. Wall cabinets are ***not*** intended to be installed independently without additional support
- Mullion doors and Camed glass designs are ***not*** available for 12" deep cabinets with Operational Ends (OE); the doors are ***not*** wide enough to accommodate these decorative door/glass types
- Camed Glass, Mullion Doors or Specialty Inserts are ***not*** available on multiple glass door positions (Front & End, Front & Ends Both, Top, Top & End, Top & Ends Both, Top & Bottom, Top & Bottom & End, Top & Bottom & Ends Both, Bottom, Bottom & End or Bottom & Ends Both)
- Glass doors ***must*** be ordered on front of cabinet to allow ordering of glass doors for Operational Ends (OE)

Whisper Touch Angle Restrictor Clips (WTHARC) are recommended for additional decorative hardware clearance

In 20-20 Operational End (OE) ***must*** be selected before adding glass to cabinet ends. Order Example: W1830R- WOE.R.1- 2BIS.1E

When ordering shelf kits for any Operational End (OE) cabinet be sure to order the shelf kits with the •OE suffix. This will provide your Operational End cabinet shelves with a complete and finished look

New

Attached Decorative End (Factory Applied Replacement Doors)

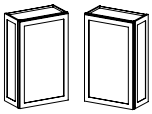

ADWE.1

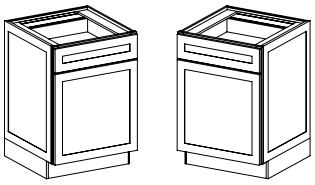

ADBEL ADBER

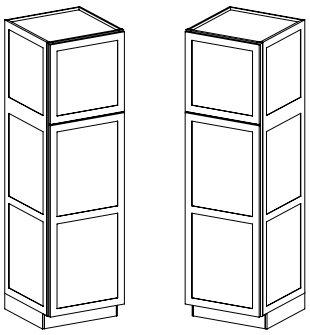

ADTEL ADTER

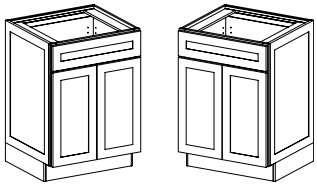

ADVEL ADVER

Specify R or L
Base

ADBE R or L

ADBE B

Tall

ADTE R or L

ADTE B

Vanity

ADVE R or L

ADVE B

Wall
12"-33" High

ADWE R or L▪1

ADWE B▪1

36"-54" High

ADWE R or L▪2

ADWE B▪2

Special Drilling for Attachments

ADE

Grey color coding indicates new product, size or code.

- Factory Applied Decorative Door
- Available on Full and Half Overlay door styles
- Available on select cabinets only
- Wall Appliance Garage cabinets (WAG) and Wall Lateral Bi-Fold Cabinets (WLBF) ordered with Attached Decorative Wall Ends will be supplied with a single door
- Oven Cabinets (OC) and Microwave Cooking Center cabinets (MCC_) ordered with Attached Decorative Tall Ends will be supplied with a door configuration that matches standard Utility (U) cabinets; tall lower door and short upper door
- ADE: This dash option will be used with replacement doors to ensure the special attachment pieces are installed into the door (Example: RD2430NH.B-ADE)

PE	CH
APC	IF
APFC	TWR
FPEB	WR
MI	XS
DE	XSG
OE	GD
● AD_E	RTK
CW	RTKP
RD	TKD
ID	

Cabinet Dimension Modification Information

Cabinet Dimension Modifications Choose from the following and apply to cabinet code:		
One Dimension	**Two Dimensions**	**Three Dimensions**
CW *(Change Width)*	**CW.RD** *(Change Width & Reduce Depth)*	**CW.RD.CH** *(Change Width, Reduce Depth & Change Height)*
RD *(Reduce Depth)*	**CW.ID** *(Change Width & Increase Depth)*	
ID *(Increase Depth)*	**RD.CH** *(Reduce Depth & Change Height)*	**CW.ID.CH** *(Change Width, Increase Depth & Change Height)*
CH *(Change Height)*	**ID.CH** *(Increase Depth & Change Height)*	
	CW.CH *(Change Width & Change Height)*	

- Cabinets can be modified in 1/16" increments; specify overall finished dimensions to the nearest 1/16". Doors, drawer fronts and cabinet opening will be modified to coordinate with the new dimensions
- Height modifications will occur in the door portion of the cabinet
- Shelf quantities will remain consistent with original cabinet when cabinet dimensions are increased or decreased
- ***Note:*** For information on replacement doors and made-to-order doors, refer to the Decorative Appliance Panel section of this book

Change Width

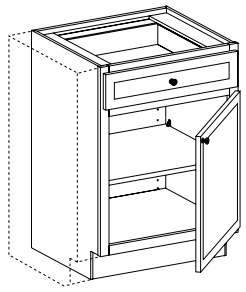

One Dimension

CW

Change Width		
Cabinet	Min. Width	Max. Width
Wall	9"	48"
Base	9"	48"
Tall	9"	36"
Vanity Base	12"	60"

- To order Change Width (CW) modifications, start with a larger cabinet and reduce down in 1/16" increments. Consult option availability chart for your desired cabinet
- Specify overall finished width. Example 1: W1830L-CW 17 1/2"; Example 2: B30BUTT-CW 28 1/2" (Example of incorrect request: W1830L-CW 19 1/2")
- Double door cabinets ***cannot*** be modified to less than 24" wide; single door cabinets ***must*** be used for this option
- Select Decorative Doors and Inserts are available with the Change Width (CW) option; refer to the Decorative Doors and Inserts section for specific availability
- Consult option availability chart for your desired cabinet
- ***Note:*** Decorative Inserts are ***not*** available on cabinets less than 12" wide

Consider using APDW (Appliance Panel Drawer Front) if a unique Filler Overlay size is required in your design. See "Custom Appliance Panels" section of this book for guidelines and parameters

	PE	CH
	APC	IF
	APFC	TWR
	FPEB	WR
	MI	XS
	DE	XSG
	OE	GD
	AD_E	RTK
●	CW	RTKP
	RD	TKD
	ID	

Reduced Depth

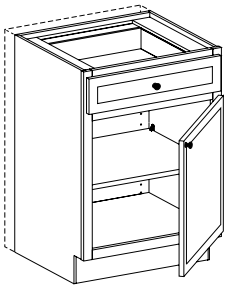

One Dimension

RD

- Many cabinets can be reduced to your desired depth in 1/16" increments. We do have suggested minimums that control function of cabinets. See chart
- Any cabinet reduced in depth to less than 4 5/8" will be shipped as a Cabinet Front Only (CFO)
- Consult option availability chart for your desired cabinet
- Order Example: B24R-RD reduced depth to 20 1/4"

	PE	CH
	APC	IF
	APFC	TWR
	FPEB	WR
	MI	XS
	DE	XSG
	OE	GD
	AD_E	RTK
	CW	RTKP
●	RD	TKD
	ID	

Cabinet	Drawer Box Depth
24"-27"	20 43/64"
21"-23 15/16"	17 23/32"
18"-20 15/16"	14 49/64"
15"-17 15/16"	11 13/16"
12"-14 15/16"	8 55/64"
less than 12"	No drawer

Reduced Depth		
Sugg. Min.	Cabinets	Reason
4 5/8"	All	Minimum for shelf hole drilling
9"	PB	Minimum for toe kick notch Less than 9" WR is mandatory
12"	Cabinets with drawers	Minimum for working drawer Less than 12" depth will have false drawer front
18"	BEA WEA	Minimum allowed
12"	WWH	Wine Storage section always 12" deep

Increased Depth

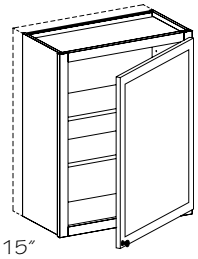

15″

One Dimension

ID

- Many wall cabinets can be increased to a 24" depth, in 1/16" increments
- Consult option availability chart for your desired cabinet
- Any wall cabinet over 24″ wide, at least 30″ high with a depth greater than 12″ ***must*** be installed between two cabinets, a cabinet and a wall or supported from below. The same is also true for cabinets with BUTT doors
- Many Tall cabinets can be increased to a 27" depth, in 1/16" increments. Consult option availability chart for your desired cabinet
- Order Example: W2430R-ID increased depth to 16 1/4"
- ***Note:*** Maximum cabinet width for this option is 36"

	PE	CH
	APC	IF
	APFC	TWR
	FPEB	WR
	MI	XS
	DE	XSG
	OE	GD
	AD_E	RTK
	CW	RTKP
	RD	TKD
●	ID	

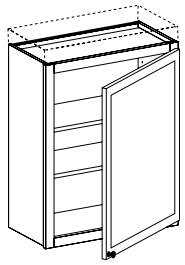

Change Height

One Dimension

CH

Change Height		
Cabinet	Min. Height	Max. Height
Wall	12"	54"
Base FH	16 1/2"	42"
Base	23"	42"
Tall	72 1/2"	96"
Vanity Base	23"	42"

PE	● CH
APC	IF
APFC	TWR
FPEB	WR
MI	XS
DE	XSG
OE	GD
AD_E	RTK
CW	RTKP
RD	TKD
ID	

- Many cabinets can be modified to your desired height in 1/16" increments
- Consult option availability chart for your desired cabinet
- Specify overall finished height. Example 1: W1836L-CH 33 1/2"; Example 2: B30BUTT-CH 40 1/2"
- To Change Height (CH) on wall cabinets 18 1/16" to 23 7/16" H, select a nominal 24" H cabinet (heights ***cannot*** be modified on 21" H cabinets); for heights 23 9/16" to 29 15/16" H, select a nominal 30" H cabinet (heights ***cannot*** be modified on 27" H cabinets)
- 34 1/2" H Base Cabinets can be increased in height to 42" H; height adjustments will be made to the door section of the base cabinet, therefore height adjustments are ***not*** available for drawer stack cabinets
- For Tall 72 1/2"–83 15/16" H, select a nominal 84" H cabinet; height adjustments will be made to the upper section of the tall cabinet. Cabinets changed to a height shorter than 81 1/2" will ***not*** have a shelf in the upper section

Consider using APDW (Appliance Panel Drawer Front) if a unique Filler Overlay size is required in your design. See "Custom Appliance Panels" section of this book for guidelines and parameters

Change Width & Reduce Depth

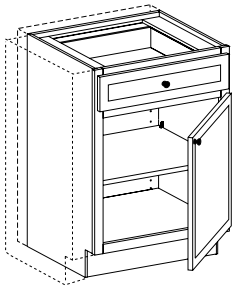

Two Dimensions

CW.RD

PE	CH
APC	IF
APFC	TWR
FPEB	WR
MI	XS
DE	XSG
OE	GD
AD_E	RTK
● CW	RTKP
● RD	TKD
ID	

- Many cabinets can be modified to your desired width and depth. We do have suggested minimums that control function of cabinets
- Consult option availability chart for your desired cabinet
- Any cabinet reduced in depth to less than 4 5/8" will be shipped as a Cabinet Front Only (CFO)
- Double door cabinets ***cannot*** be modified to less than 24" wide; single door cabinets ***must*** be used for this option

Cabinet	Drawer Box Depth
24"-27"	20 43/64"
21"-23 15/16"	17 23/32"
18"-20 15/16"	14 49/64"
15"-17 15/16"	11 13/16"
12"-14 15/16"	8 55/64"
less than 12"	No drawer

Change Width and Reduced Depth				
Cabinets	Min. Width	Max. Width	Min. Depth	Reasons for exceptions
Wall	9"	48"	4 5/8"	Minimum for shelf hole drilling
Base	9"	48"	4 5/8"	Minimum for shelf hole drilling
Tall	9"	36"	4 5/8"	Minimum for shelf hole drilling
Vanity Base	12"	60"	4 5/8"	Minimum allowed
Cabinets with drawers	N/A	N/A	12"	Minimum for working drawer Less than 12" depth will have false drawer front
Peninsula Base	9"	48"	9"	Minimum for toe kick notch Less than 9" WR is mandatory

Change Width & Increase Depth

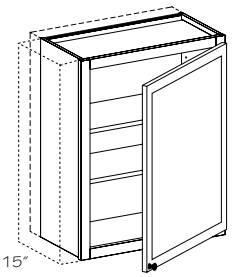

Two Dimensions

CW.ID

PE	CH
APC	IF
APFC	TWR
FPEB	WR
MI	XS
DE	XSG
OE	GD
AD_E	RTK
● CW	RTKP
RD	TKD
● ID	

Change Width and Increased Depth			
Cabinets	Min. Width	Max. Width	Max. Depth
Wall	9"	48"	24"
Base	9"	48"	24"
Tall	9"	36"	27"
Vanity Utility	12"	36"	27"
Peninsula Wall	9"	36"	15"

- Many cabinets can be modified to your desired width and depth
- Consult chart for the suggested minimums that control the functionality of cabinets
- Many wall cabinets can be increased to a 24" depth, in 1/16" increments. Consult option availability chart for your desired cabinet
- Double door cabinets ***cannot*** be modified to less than 24" wide; single door cabinets ***must*** be used for this option
- Any wall cabinet over 24" wide, at least 30" high with a depth greater than 12" ***must*** be installed between two cabinets, a cabinet and a wall or supported from below. The same is also true for cabinets with BUTT doors

Reduce Depth & Change Height

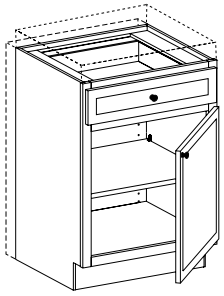

Two Dimensions

RD.CH

PE	● CH
APC	IF
APFC	TWR
FPEB	WR
MI	XS
DE	XSG
OE	GD
AD_E	RTK
CW	RTKP
● RD	TKD
ID	

- Many cabinets can be changed to your desired depth and height
- Consult chart for suggested minimums that control the functionality of cabinet
- Any cabinet reduced in depth to less than 4 5/8" will be shipped as a Cabinet Front Only (CFO)
- To Change Height (CH) on wall cabinets 18 1/16" to 23 7/16" H, select a nominal 24" H cabinet (heights ***cannot*** be modified on 21" H cabinets); for heights 23 9/16" to 29 15/16" H, select a nominal 30" H cabinet (heights ***cannot*** be modified on 27" H cabinets)
- 34 1/2" H Base Cabinets can be increased in height to 42" H; height adjustments will be made to the door section of the base cabinet, therefore height adjustments are ***not*** available for drawer stack cabinets
- For Tall 72 1/2"–83 15/16" H, select a nominal 84" H cabinet; height adjustments will be made to the upper section of the tall cabinet. Cabinets changed to a height shorter than 81 1/2" will ***not*** have a shelf in the upper section
- Consult option availability chart for your desired cabinet

Cabinet	Drawer Box Depth
24"-27"	20 43/64"
21"-23 15/16"	17 23/32"
18"-20 15/16"	14 49/64"
15"-17 15/16"	11 13/16"
12"-14 15/16"	8 55/64"
less than 12"	No drawer

Reduced Depth and Change Height				
Cabinets	Min. Depth	Min. Height	Max. Height	Reasons for exceptions
Wall	4 5/8"	12"	54"	Minimum for shelf hole drilling
Base FH	4 5/8"	16 1/2"	42"	Minimum for shelf hole drilling
Base	4 5/8"	23"	42"	Minimum for shelf hole drilling
Tall	4 5/8"	72 1/2"	96"	Minimum for shelf hole drilling
Vanity Base	4 5/8"	23"	42"	Minimum for shelf hole drilling
Cabinets with drawers	12"	N/A	N/A	Minimum for working drawer Less than 12" depth will have false drawer front
Peninsula Base	9"	23"	42"	Minimum for toe kick notch Less than 9" WR is mandatory
BEA	18"	23"	42"	Minimum allowed

Increase Depth & Change Height

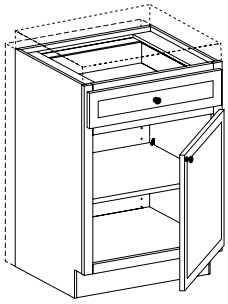

Two Dimensions

ID.CH

PE	● CH
APC	IF
APFC	TWR
FPEB	WR
MI	XS
DE	XSG
OE	GD
AD_E	RTK
CW	RTKP
RD	TKD
● ID	

- Many cabinets can be changed to your desired depth and height
- Consult chart for suggested minimums that control the functionality of cabinet
- Any wall cabinet over 24″ wide, at least 30″ high with a depth greater than 12″ ***must*** be installed between two cabinets, a cabinet and a wall or supported from below. The same is also true for cabinets with BUTT doors
- Maximum Increased Depth (ID)
- To Change Height (CH) on wall cabinets 18 1/16″ to 23 7/16″ H, select a nominal 24″ H cabinet (heights ***cannot*** be modified on 21″ H cabinets); for heights 23 9/16″ to 29 15/16″ H, select a nominal 30″ H cabinet (heights ***cannot*** be modified on 27″ H cabinets)
- 34 1/2″ H Base Cabinets can be increased in height to 42″ H; height adjustments will be made to the door section of the base cabinet, therefore height adjustments are ***not*** available for drawer stack cabinets
- For Tall 72 1/2″–83 15/16″ H, select a nominal 84″ H cabinet; height adjustments will be made to the upper section of the tall cabinet. Cabinets changed to a height shorter than 81 1/2″ will ***not*** have a shelf in the upper section
- Consult option availability chart for your desired cabinet
- ***Note:*** Maximum cabinet width for this option is 36″

Increased Depth and Change Height			
Cabinets	Max. Depth	Min. Height	Max. Height
Wall	24"	12"	54"
Base FH	24"	16 1/2"	42"
Base	24"	23"	42"
Tall	27"	72 1/2"	96"
Vanity Utility	27"	72 1/2"	96"
Peninsula Wall	15"	12"	42"

Change Width & Change Height

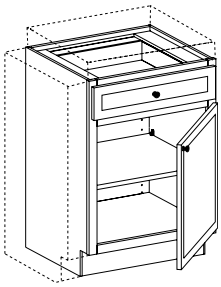

Two Dimensions

CW.CH

PE	● CH
APC	IF
APFC	TWR
FPEB	WR
MI	XS
DE	XSG
OE	GD
AD_E	RTK
● CW	RTKP
RD	TKD
ID	

- Many cabinets can be modified to your desired width and height
- Consult option availability chart for your desired cabinet
- Double door cabinets ***cannot*** be modified to less than 24″ wide; single door cabinets ***must*** be used for this option
- To Change Height (CH) on wall cabinets 18 1/16″ to 23 7/16″ H, select a nominal 24″ H cabinet (heights ***cannot*** be modified on 21″ H cabinets); for heights 23 9/16″ to 29 15/16″ H, select a nominal 30″ H cabinet (heights ***cannot*** be modified on 27″ H cabinets)
- 34 1/2″ H Base Cabinets can be increased in height to 42″ H; height adjustments will be made to the door section of the base cabinet, therefore height adjustments are ***not*** available for drawer stack cabinets
- For Tall 72 1/2″–83 15/16″ H, select a nominal 84″ H cabinet; height adjustments will be made to the upper section of the tall cabinet. Cabinets changed to a height shorter than 81 1/2″ will ***not*** have a shelf in the upper section

Change Width and Change Height				
Cabinet	Min. Width	Max. Width	Min. Height	Max. Height
Wall	9"	48"	12"	54"
Base FH	9"	48"	16 1/2"	42"
Base	9"	48"	23"	42"
Tall	9"	36"	72 1/2"	96"
Vanity Base	12"	60"	23"	42"

Change Width, Reduce Depth & Change Height

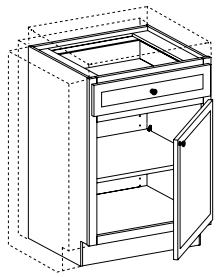

Three Dimensions

CW.RD.CH

PE	● CH
APC	IF
APFC	TWR
FPEB	WR
MI	XS
DE	XSG
OE	GD
AD_E	RTK
● CW	RTKP
● RD	TKD
ID	

- Many cabinets can be modified to your desired width, depth and height. We do have suggested minimums that control function of cabinets
- Consult option availability chart for your desired cabinet
- Any cabinet reduced in depth to less than 4 5/8" will be shipped as a Cabinet Front Only (CFO)
- Double door cabinets ***cannot*** be modified to less than 24" wide; single door cabinets ***must*** be used for this option
- To Change Height (CH) on wall cabinets 18 1/16" to 23 7/16" H, select a nominal 24" H cabinet (heights ***cannot*** be modified on 21" H cabinets); for heights 23 9/16" to 29 15/16" H, select a nominal 30" H cabinet (heights ***cannot*** be modified on 27" H cabinets)
- 34 1/2" H Base Cabinets can be increased in height to 42" H; height adjustments will be made to the door section of the base cabinet, therefore height adjustments are ***not*** available for drawer stack cabinets
- For Tall 72 1/2"–83 15/16" H, select a nominal 84" H cabinet; height adjustments will be made to the upper section of the tall cabinet. Cabinets changed to a height shorter than 81 1/2" will ***not*** have a shelf in the upper section

Cabinet	Drawer Box Depth
24"-27"	20 43/64"
21"-23 15/16"	17 23/32"
18"-20 15/16"	14 49/64"
15"-17 15/16"	11 13/16"
12"-14 15/16"	8 55/64"
less than 12"	No drawer

Change Width, Reduced Depth and Change Height						
Cabinets	Min. Width	Max. Width	Min. Depth	Min. Height	Max. Height	Reasons for exceptions
Wall	9"	48"	4 5/8"	12"	54"	Minimum for shelf hole drilling
Base FH	9"	48"	4 5/8"	16 1/2"	42"	Minimum for shelf hole drilling
Base	9"	48"	4 5/8"	23"	42"	Minimum for shelf hole drilling
Tall	9"	36"	4 5/8"	72 1/2"	96"	Minimum for shelf hole drilling
Vanity Base	12"	60"	4 5/8"	23"	42"	Minimum for shelf hole drilling
Peninsula Base	9"	48"	9"	23"	42"	Minimum for toe kick notch Less than 9" WR is mandatory
Minimum depth for working drawer is 12", less than 12" depth will have a false drawer front"						

Change Width, Increase Depth & Change Height

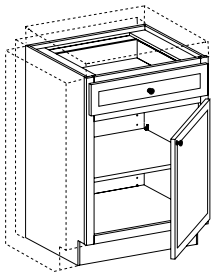

Three Dimensions

CW.ID.CH

PE	● CH
APC	IF
APFC	TWR
FPEB	WR
MI	XS
DE	XSG
OE	GD
AD_E	RTK
● CW	RTKP
RD	TKD
● ID	

- Many cabinets can be modified to your desired width, depth and height. We do have suggested minimums that control function of cabinets
- Consult option availability chart for your desired cabinet
- Any wall cabinet over 24" wide, at least 30" high with a depth greater than 12" ***must*** be installed between two cabinets, a cabinet and a wall or supported from below. The same is also true for cabinets with BUTT doors
- Double door cabinets ***cannot*** be modified to less than 24" wide; single door cabinets ***must*** be used for this option
- To Change Height (CH) on wall cabinets 18 1/16" to 23 7/16" H, select a nominal 24" H cabinet (heights ***cannot*** be modified on 21" H cabinets); for heights 23 9/16" to 29 15/16" H, select a nominal 30" H cabinet (heights ***cannot*** be modified on 27" H cabinets)
- 34 1/2" H Base Cabinets can be increased in height to 42" H; height adjustments will be made to the door section of the base cabinet, therefore height adjustments are ***not*** available for drawer stack cabinets
- For Tall 72 1/2"–83 15/16" H, select a nominal 84" H cabinet; height adjustments will be made to the upper section of the tall cabinet. Cabinets changed to a height shorter than 81 1/2" will ***not*** have a shelf in the upper section
- ***Note:*** Maximum cabinet width for this option is 36"

Change Width, Increased Depth and Change Height				
Cabinets	Min. Width	Max. Width	Max. Depth	Max. Height
Wall	9"	48"	24"	54"
Base	9"	48"	24"	42"
Tall	9"	36"	27"	96"
Vanity Utility	12"	36"	27"	96"
Peninsula Wall	9"	36"	15"	42"

Cabinet Front Only

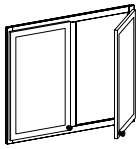

W3030-CFO

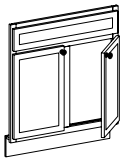

B30-CFO

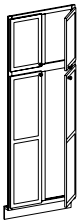

U302484-CFO

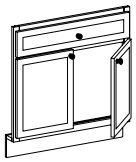

VSB242134-CFO

CFO

- Front frame and appropriate doors and drawer fronts only
- Toe kick attached where applicable except 93" and 96" tall
- Extended stiles available

We recommend using this option on cabinetry containing no factory installed accessories, since all cabinet components will be eliminated except face frame, doors and drawer fronts. For example, order EZR36L-CFO instead of EZR36L.WSS-CFO or B18L-CFO instead of B18L.FWT-CFO

PE	CH
APC	IF
APFC	TWR
FPEB	WR
MI	XS
DE	XSG
OE	GD
AD_E	RTK
CW	RTKP
RD	TKD
ID	

Inverted Frame

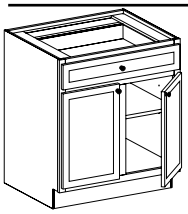

B30
Standard

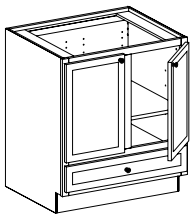

B30-IF
Inverted Frame

IF

- Most Base and Vanity cabinets can be ordered with an Inverted Frame (IF)
- Consult option availability chart for your desired cabinet
- Bottom drawer box will be 2 1/4" deep
- Factory installed Roll-out Trays (ROT) are ***not*** available

PE	CH
APC	● IF
APFC	TWR
FPEB	WR
MI	XS
DE	XSG
OE	GD
AD_E	RTK
CW	RTKP
RD	TKD
ID	

Mullion Strip Wall–Void Center Stile

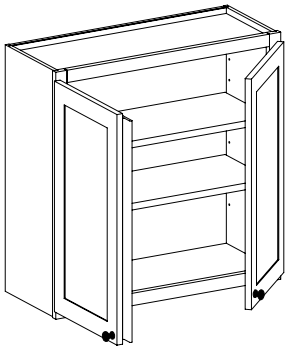

MSW

- On double door cabinets (30"–36"wide, up to 42" high) the center stile can be removed. When this is done, a mullion strip is attached to the left door.
  Order Example: W3030-MSW
- Solid wood
- Painted hardwood supplied for EverCore™
- Painted or Stained hardwood supplied for Wood-Grain Foil door styles
- Any wall cabinet over 24" wide, at least 30" high with a depth greater than 12" ***must*** be installed between two cabinets, a cabinet and a wall or supported from below. The same is also true for cabinets with BUTT doors
- ***Not*** available on Peninsula cabinets
- ***Not*** available with butt door cabinets
- Change Width (CW) option ***not*** available
- Change Height (CH) option ***not*** available

PE	CH
APC	IF
APFC	TWR
FPEB	WR
MI	XS
DE	XSG
OE	GD
AD_E	RTK
CW	RTKP
RD	TKD
ID	

Mullion Strip Base–Void Center Stile

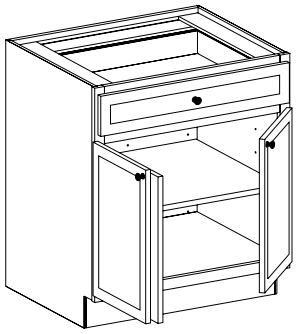

MSB

- On double door cabinets (30" or wider) the center stile can be removed. When this is done, a mullion strip is attached to the left door.
- Order Example: B30-MSB
- Solid wood
- Painted hardwood supplied for EverCore™
- Painted or Stained hardwood supplied for Wood-Grain Foil door styles
- ***Not*** available with butt door cabinets
- ***Not*** available for use on cabinets with Rollout Trays installed
- Change Width (CW) option ***not*** available
- Change Height (CH) option ***not*** available
- ***Note:*** This option applies to base cabinets only

PE	CH
APC	IF
APFC	TWR
FPEB	WR
MI	XS
DE	XSG
OE	GD
AD_E	RTK
CW	RTKP
RD	TKD
ID	

Mullion Strip Peninsula Base–Void Center Stile

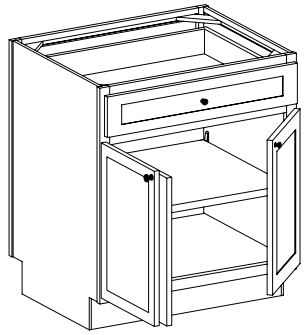

MSPBK Kitchen Side
MSPBP Peninsula Side
MSPBB Both Sides

- On double door cabinets (30"or wider) the center stile can be removed. When this is done, a mullion strip is attached to the left door. Order Example: PB30-MSPBK
- Solid wood
- Painted hardwood supplied for EverCore™
- Painted or Stained hardwood supplied for Wood-Grain Foil door styles
- ***Not*** available with butt door cabinets
- ***Not*** available for use on cabinets with Rollout Trays installed
- ***Note:*** This option applies to base peninsula cabinets only

PE	CH
APC	IF
APFC	TWR
FPEB	WR
MI	XS
DE	XSG
OE	GD
AD_E	RTK
CW	RTKP
RD	TKD
ID	

Mullion Strip Utility Top–Void Center Stile

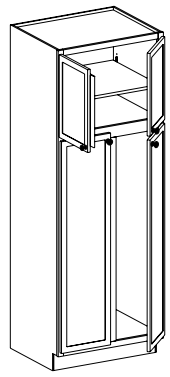

MSUT

- On double door cabinets (30" or wider) the center stile can be removed from the upper section of a tall cabinet. When this is done, a mullion strip is attached to the left door
- Solid wood
- Painted hardwood supplied for EverCore™
- Painted or Stained hardwood supplied for Wood-Grain Foil door styles
- If Inverted Frame (IF) option is chosen with this option, the smaller section, now on bottom, will have the mullion strip
- ***Not*** available on cabinets with standard Mullion Strip Base (MSB). Example: Multi-Storage Pantry (MSP), Utility Roll-out Tray (U-ROT)
- ***Not*** available with butt door cabinets
- Change Width (CW) option ***not*** available
- Change Height (CH) option ***not*** available
- Order Example: U302484-MSUT
- ***Note:*** MSUB and MSUT ***not*** available on same cabinet

PE	CH
APC	IF
APFC	TWR
FPEB	WR
MI	XS
DE	XSG
OE	GD
AD_E	RTK
CW	RTKP
RD	TKD
ID	

Mullion Strip Utility Bottom–Void Center Stile

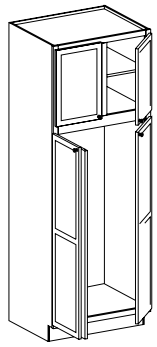

MSUB

- On double door cabinets (30" or wider) the center stile can be removed from the lower section of a tall cabinet. When this is done, a mullion strip is attached to the left door
- Solid wood
- Painted hardwood supplied for EverCore™
- Painted or Stained hardwood supplied for Wood-Grain Foil door styles
- If Inverted Frame (IF) option is chosen with this option, the larger section, now on top, will have the mullion strip
- ***Not*** available with butt door cabinets
- ***Not*** available for use on cabinets with Rollout Trays installed
- Change Width (CW) option ***not*** available
- Change Height (CH) option ***not*** available
- Order Example: U302484-MSUB
- ***Note:*** MSUB and MSUT ***not*** available on same cabinet

PE	CH
APC	IF
APFC	TWR
FPEB	WR
MI	XS
DE	XSG
OE	GD
AD_E	RTK
CW	RTKP
RD	TKD
ID	

Mullion Strip Oven Cabinet–Void Center Stile

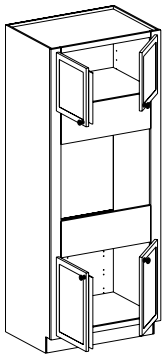

MSOTB

- On 33" and 39" wide single oven cabinets the center stile can be removed from the upper and lower sections. When this is done, a mullion strip is attached to the left doors
- Solid wood
- ***Not*** available with butt door cabinets
- ***Not*** available for use on cabinets with Rollout Trays installed
- Change Width (CW) option ***not*** available
- Change Height (CH) option ***not*** available
- Painted hardwood supplied for EverCore™
- Painted or Stained hardwood supplied for Wood-Grain Foil door styles
- Order Example: OC332484S-MSOTB
- ***Note:*** This option applies only to the OC 33_S and OC 39_S cabinets

PE	CH
APC	IF
APFC	TWR
FPEB	WR
MI	XS
DE	XSG
OE	GD
AD_E	RTK
CW	RTKP
RD	TKD
ID	

Top Wide Rail

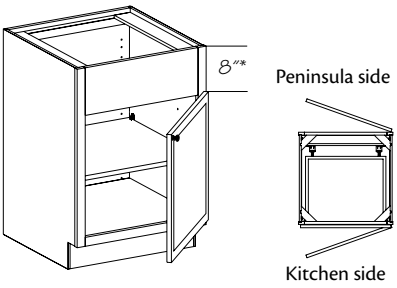

*The reveal on a cabinet with TWR varies depending on the door overlay. See chart.

Overlay	1/2"	Full
Reveal	7 ½"	6 ⅞"

TWRB Both Sides
TWRK Kitchen Side
TWRP Peninsula Side

- We offer many base and vanity cabinets with a Top Wide Rail option. Consult option availability chart for your desired cabinet
- When Both Sides are selected, the cabinet will ***not*** have a drawer box or drawer fronts
- When Kitchen side is selected, the drawer box will be three inches shallower than the standard drawer box and will open to the Peninsula side
- When Peninsula side is selected, the drawer box will be three inches shallower than the standard drawer box and will open to the Kitchen side. See Illustration
- Quartersawn door styles have quartersawn top wide rail, cabinet frame is plain sawn wood
- Painted hardwood supplied for EverCore™

PE	CH
APC	IF
APFC	● TWR
FPEB	WR
MI	XS
DE	XSG
OE	GD
AD_E	RTK
CW	RTKP
RD	TKD
ID	

Wall Top Wide Rail

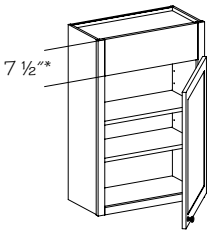

*The reveal on a cabinet with WTWR varies depending on the door overlay. See chart.

Overlay	1/2"	Full
18" H	6 ½"	5 ⅞"
24"H	7 ½"	6 ⅞"
All other walls	7"	6"

WTWR 7 1/2"

- Many wall cabinets can be ordered with a wide top rail. Consult option availability chart for your desired cabinet
- Wall Top Wide Rail (WTWR) available on 12"–36" high cabinets only
- ***Not*** available on 27" high cabinets
- This option will add 6" to the interior and exterior nominal height
- Quartersawn door styles have quartersawn top wide rail, cabinet frame is plain sawn wood
- Top rail on 18" high cabinets will be 7", on 24" high cabinets 8", all other heights 7 1/2"
- Change Width (CW) option ***not*** available
- Change Height (CH) option ***not*** available
- Painted hardwood supplied for EverCore™

Remember, any replacement doors, interior accessories or options, including shelves, are based on the size of original cabinet, ***not*** the height after WTWR is added

PE	CH
APC	IF
APFC	● TWR
FPEB	WR
MI	XS
DE	XSG
OE	GD
AD_E	RTK
CW	RTKP
RD	TKD
ID	

Cabinet Valance Options

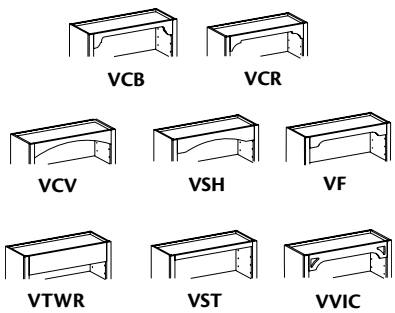

Corbel Valance
VCB 5 1/2"
Crown Valance
VCR 5 1/2"
Cove Valance
VCV 4 1/2"
Furniture Valance
VF 3 1/2"
Shaker Arched Valance
VSH 5 1/2"
Straight Rail Valance
VST 1 1/2"
VTWR 6"
Victorian Valance
VVIC 5 1/2"

- On Furniture Cabinets and Wall Open Cabinets (WOC), the top rail can be ordered with an optional decorative valance
- WOC cabinets are manufactured with no valance as standard
- Valance options available in cabinets 15" and wider
- Morristown will be supplied in plainsawn Oak
- Painted hardwood supplied for EverCore™ and Thermofoil
- Order Example: FBS181248-VS
- Order Example: WOC3030-VCR

PE	CH
APC	IF
APFC	TWR
FPEB	WR
MI	XS
DE	XSG
OE	GD
AD_E	RTK
CW	RTKP
RD	TKD
ID	

Decorative Wide Rail Options

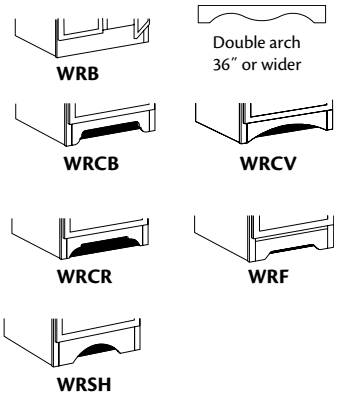

Wide Rail Plain

WRB
WRK
WRP

Wide Rail Corbel

WRCBB
WRCBK
WRCBP

Wide Rail Cove

WRCVB
WRCVK
WRCVP

Wide Rail Crown

WRCRB
WRCRK
WRCRP

Wide Rail Furniture

WRFB
WRFK
WRFP

Wide Rail Shaker

WRSHB
WRSHK
WRSHP

PE	CH
APC	IF
APFC	TWR
FPEB	● WR
MI	XS
DE	XSG
OE	GD
AD_E	RTK
CW	RTKP
RD	TKD
ID	

- We offer many base and tall cabinets with a variety of wide bottom rail options (WR). Consult option availability chart for your desired cabinet
- B=Both
  K=Kitchen side
  P=Peninsula side
- Decorative wide bottom rail only available on cabinets 15" or wider
- Ships with black toe kick installed, except for Wide Rail Plain (WR). Matching toe kick ***must*** be ordered separately and installed before cabinet is installed
- RTK and WR ***not*** available on same cabinet except when combining WR_K and RTKP options
- In quartersawn door styles, Wide Rail Plain will be quartersawn; all other decorative wide rail options will be plain sawn
- ***Not*** available on 93" and 96" high tall cabinets
- ***Not*** available in Morristown, except for Wide Rail Plain (WR). Melrose and Putnam supplied plain sawn
- Quartersawn door styles are supplied plain sawn
- Painted hardwood supplied for EverCore™ and Thermofoil
- Order Example: B30-WRAK

Remember, WRA-Wide Bottom Rail Arched Fret, WRSH-Shaker, WRA-Arched, WRCR-Crown, WRCB-Corbel, WRCV-Cove, and WRF-Furniture come with black toe kick behind. To finish the toe kick you ***must*** order MTK8 or WMTK8 and apply it BEFORE the cabinets are installed.

Extended Stile

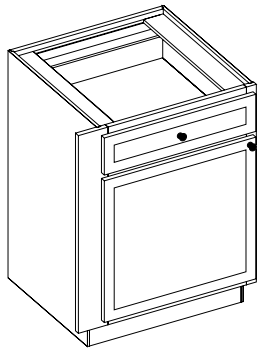

Specify R or L
Base

B3 XB
B3 XR or L
PB3 XBB
PB3 XR or LB
PB3 XR or LK
PB3 XBK or P
PB3 XR or LP

Wall

W3 XB
W3 XR or L
PW3 XBB
PW3 XR or LB
PW3 XR or LK
PW3 XBK or P
PW3 XR or LP

Specify R or L
Tall

T3 XB
T3 XR or L

Vanity

V3 XB
V3 XR or L

PE	CH
APC	IF
APFC	TWR
FPEB	WR
MI	● XS
DE	XSG
OE	GD
AD_E	RTK
CW	RTKP
RD	TKD
ID	

- 3" extended stiles are available. Stiles may be extended left, right or both. Consult option availability chart (XS) for your desired cabinet
- Order Example: B12L-B3XL. Order designation XL means 3" extended stile left, overall cabinet width is 15"
- Use wall nomenclature for Furniture cabinets up to 66" high
- Painted hardwood supplied for EverCore™
- Available with Change Width (CW) and Change Height (CH)

Cabinets	Left	Right	Left & Right	Cabinets	Left	Right	Left & Right	Cabinets	Left	Right	Left & Right
Wall	W3XL	W3XR	W3XB	Peninsula Wall (Kitchen side)	PW3XLK	PW3XRK	PW3XBK	Peninsula Base (Kitchen side)	PB3XLK	PB3XRK	PB3XBK
Tall	T3XL	T3XR	T3XB	Peninsula Wall (Peninsula side)	PW3XLP	PW3XRP	PW3XBP	Peninsula Base (Peninsula side)	PB3XLP	PB3XRP	PB3XBP
Base	B3XL	B3XR	B3XB								
Vanity	V3XL	V3XR	V3XB	Peninsula Wall (Both sides)	PW3XLB	PW3XRB	PW3XBB	Peninsula Base (Both sides)	PB3XLB	PB3XRB	PB3XBB

Fluted Extended Stile

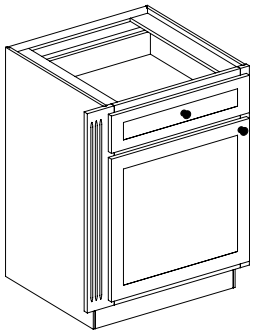

Specify R or L
Base

FB3 XB
FB3 XR or L
FPB3 XBB
FPB3 XR or LB
FPB3 XR or LK
FPB3 XBK or P
FPB3 XR or LP

Wall

FW3 XB
FW3 XR or L
FPW3 XBB
FPW3 XR or LB
FPW3 XR or LK
FPW3 XBK or P
FPW3 XR or LP

Specify R or L
Tall

FT3 XB
FT3 XR or L

Vanity

FV3 XB
FV3 XR or L

- 3″ extended stiles are available. Stiles may be extended left, right or both. Consult option availability chart (XS) for your desired cabinet
- Use wall nomenclature for Furniture cabinets up to 66″ high
- Minimum cabinet height 12″
- Painted hardwood supplied for EverCore™
- ***Not*** available in Morristown; Melrose and Putnam supplied plain sawn
- Change Height (CH) option ***not*** available
- Order Example: B12L-FB3XL. Order designation XL means 3″ extended stile left, overall cabinet width is 15″

PE	CH
APC	IF
APFC	TWR
FPEB	WR
MI	● XS
DE	XSG
OE	GD
AD_E	RTK
CW	RTKP
RD	TKD
ID	

Cabinets	Left	Right	Left & Right	Cabinets	Left	Right	Left & Right	Cabinets	Left	Right	Left & Right
Wall	FW3XL	FW3XR	FW3XB	Peninsula Wall (Kitchen side)	FPW3XLK	FPW3XRK	FPW3XBK	Peninsula Base (Kitchen side)	FPB3XLK	FPB3XRK	FPB3XBK
Tall	FT3XL	FT3XR	FT3XB	Peninsula Wall (Peninsula side)	FPW3XLP	FPW3XRP	FPW3XBP	Peninsula Base (Peninsula side)	FPB3XLP	FPB3XRP	FPB3XBP
Base	FB3XL	FB3XR	FB3XB	Peninsula Wall (Both sides)	FPW3XLB	FPW3XRB	FPW3XBB	Peninsula Base (Both sides)	FPB3XLB	FPB3XRB	FPB3XBB
Vanity	FV3XL	FV3XR	FV3XB								

Integrated Extended Stile

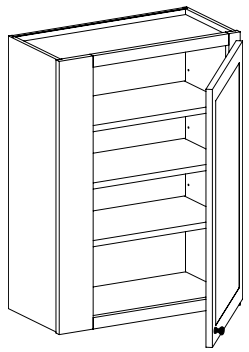

Specify R or L
Base

BG3 XB
BG3 XR or L

Wall

WG3 XB
WG3 XR or L

- 3″ integrated extended stiles are available. Stiles may be extended left, right or both. Consult option availability chart (XSG) for your desired cabinet
- Deluxe Roll-out Trays (DXROT) ***cannot*** be added to base cabinets with this option
- WG3XB is ***not*** available on wall cabinets that have a built-in center stile
- Change Width (CW) option ***not*** available
- Change Height (CH) option ***not*** available
- Painted hardwood supplied for EverCore™
- Order Example: B12L-BG3XL. Order designation G3XL means 3″ integrated extended stile left, overall cabinet width is 15″
- ***Not*** available to be used with Integrated Decorative Ends

PE	CH
APC	IF
APFC	TWR
FPEB	WR
MI	XS
DE	● XSG
OE	GD
AD_E	RTK
CW	RTKP
RD	TKD
ID	

Fluted Integrated Extended Stile

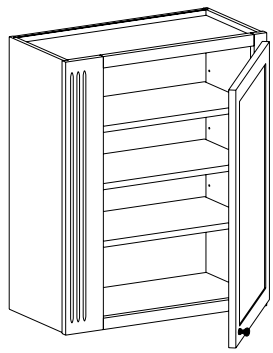

Specify R or L
Base

FBG3 XB
FBG3 XR or L

Wall

FWG3 XB
FWG3 XR or L

- 3″ integrated extended stiles are available. Stiles may be extended left, right or both. Consult option availability chart (XSG) for your desired cabinet
- FWG3XB is ***not*** available on wall cabinets that have a built-in center stile
- Painted hardwood supplied for EverCore™
- ***Not*** available in Morristown; Melrose and Putnam supplied plain sawn
- Change Width (CW) option ***not*** available
- Change Height (CH) option ***not*** available
- Order Example: B12L-FBG3XL. Order designation G3XL means 3″ integrated extended stile left, overall cabinet width is 15″
- ***Not*** available to be used with Integrated Decorative Ends

PE	CH
APC	IF
APFC	TWR
FPEB	WR
MI	XS
DE	● XSG
OE	GD
AD_E	RTK
CW	RTKP
RD	TKD
ID	

Integrated Message Center - Wall

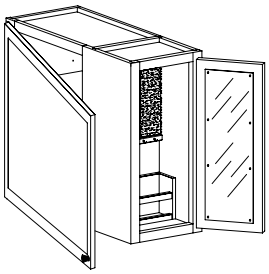

Integrated Message Center Wall

IMCW -R or L

Grey color coding indicates new product, size or code.

PE	CH
APC	IF
APFC	TWR
FPEB	WR
MI	XS
DE	XSG
OE	GD
AD_E	RTK
CW	RTKP
RD	TKD
ID	

- Available on 12" deep cabinets only
- Available on cabinets 18" to 36" wide (30" - 36" wide cabinets ***must*** have BUTT doors) - overall cabinet width will ***not*** change
- Available on cabinets 30", 33", 36", 39", and 42" high
- Message Center section is 6" wide (deep)
- Cabinet width remains the same, cabinet opening becomes 6" narrower
- Includes: Dry erase board, key hooks, cork board and Utensil organizer
- Cabinet construction defaults to All Plywood Furniture Construction (APFC) when this option is selected
- The overall width of a cabinet will increase by 1/16", when Integrated Message Center Wall is selected

Integrated Message Center - Base

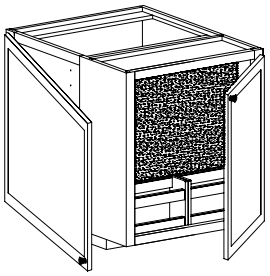

Specify R or L
Base

IMCB -R or L

Grey color coding indicates new product, size or code.

PE	CH
APC	IF
APFC	TWR
FPEB	WR
MI	XS
DE	XSG
OE	GD
AD_E	RTK
CW	RTKP
RD	TKD
ID	

- Available on 24" deep cabinets only
- Available on cabinets 18" to 36" wide (30" - 36" wide cabinets ***must*** have BUTT doors) - overall cabinet width will ***not*** change
- Available on 34 1/2" high cabinets
- Message Center section is 6" wide (deep)
- Cabinet width remains the same, cabinet opening becomes 6" narrower
- Includes cork board and two magazine racks (Magazine rack is built-in)
- Cabinet construction defaults to All Plywood Furniture Construction (APFC) when this option is selected
- The overall width of a cabinet will increase by 1/16", when Integrated Message Center Base is selected

Integrated Message Center - Utility

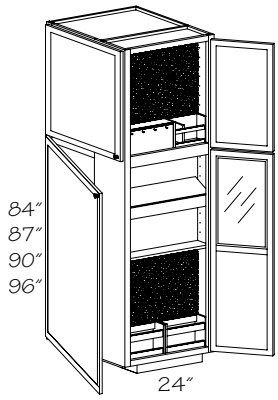

Specify R or L
Utility

IMCU -R or L

Grey color coding indicates new product, size or code.

PE	CH
APC	IF
APFC	TWR
FPEB	WR
MI	XS
DE	XSG
OE	GD
AD_E	RTK
CW	RTKP
RD	TKD
ID	

- Available on 24" deep cabinets only
- Available on cabinets 18" to 36" wide (30" - 36" wide cabinets ***must*** have BUTT doors) - overall cabinet width will ***not*** change
- Available on 84", 87", 90", 93", and 96" high cabinets
- Message Center section is 6" wide (deep)
- Cabinet width remains the same, cabinet opening becomes 6" narrower
- Top section features: Key hooks, cork board and organizer unit
- Bottom section features: Dry erase board, cork board, 2 magazine racks, 1 shelf, charging station (two - three-prong and two USB outlets)
- Requires separate power source in bottom section
- Cabinet construction defaults to All Plywood Furniture Construction (APFC) when this option is selected
- ***Note:*** Integrated Message Centers are only available on Utility (U) and Utility Stack (UST) cabinet***s***
- The overall width of a cabinet will increase by 1/16", when Integrated Message Center Utility is selected

Be sure to order a shelf kit that is 6" narrower (nominally) than the cabinet width when using Integrated Storage options.
Order Example: U302484BUTT-IMCU.R requires a SK2424

Integrated Wall Spice Shelf and Open Integrated Storage

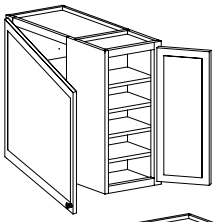

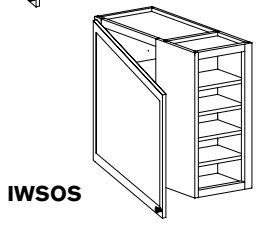

Specify R or L
Integrated Spice Shelf

IWSS -R or L

Open Integrated Storage

IWSOS -R or L

Grey color coding indicates new product, size or code.

PE	CH
APC	IF
APFC	TWR
FPEB	WR
MI	XS
DE	XSG
OE	GD
AD_E	RTK
CW	RTKP
RD	TKD
ID	

- Available on 12" deep cabinets only
- Available on cabinets 18" to 36" wide (30" - 36" wide cabinets ***must*** have BUTT doors) - overall cabinet width will ***not*** change
- Available on cabinets 30", 33", 36", 39", and 42" high
- Spice Shelf and Open Integrated Storage section is 6" wide
- Cabinet width remains the same, cabinet opening becomes 6" narrower
- Cabinet construction defaults to All Plywood Furniture Construction (APFC) when this option is selected
- The overall width of a cabinet will increase by 1/16", when Integrated Wall Spice Shelf or Open Integrated Storage is selected

New

Integrated Base Spice Shelf

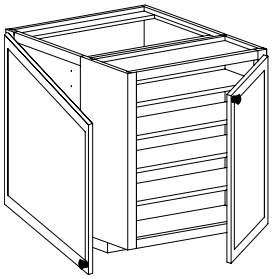

Specify R or L
Integrated Spice Shelf

IBSS ▪R or L

Grey color coding indicates new product, size or code.

- Available on 24" deep cabinets only
- Available on cabinets 18" to 36" wide (30" - 36" wide cabinets ***must*** have BUTT doors) - overall cabinet width will ***not*** change
- Available on 34 1/2" high cabinets
- Cabinet width remains the same, cabinet opening becomes 6" narrower
- Cabinet construction defaults to All Plywood Furniture Construction (APFC) when this option is selected
- The overall width of a cabinet will increase by 1/16", when Integrated Base Spice Shelf is selected

PE	CH
APC	IF
APFC	TWR
FPEB	WR
MI	XS
DE	XSG
OE	GD
AD_E	RTK
CW	RTKP
RD	TKD
ID	

New

Integrated Utility Cleaning Storage

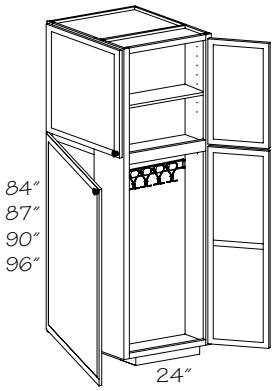

Utility Extended Bottom (UEB) shown

Specify R or L
Integrated Utility Cleaning Storage

IUCS ▪R or L

Grey color coding indicates new product, size or code.

- Available on 24" deep cabinets only
- Available on cabinets 18" to 36" wide (30" - 36" wide cabinets ***must*** have BUTT doors) - overall cabinet width will ***not*** change
- Available on 84", 87", 90", 93", and 96" high cabinets
- Cleaning storage section is 6" wide (deep)
- Cabinet width remains the same, cabinet opening becomes 6" narrower
- Cabinet construction defaults to All Plywood Furniture Construction (APFC) when this option is selected
- The overall width of a cabinet will increase by 1/16", when Integrated Utility Cleaning Storage is selected
- ***Note:*** Integrated Cleaning Supply only available with Utility Extended Bottom (UEB) cabinet

PE	CH
APC	IF
APFC	TWR
FPEB	WR
MI	XS
DE	XSG
OE	GD
AD_E	RTK
CW	RTKP
RD	TKD
ID	

Glass Door Inserts

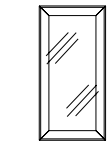
Aluminum Frame

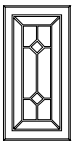
Camed

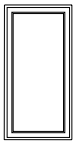
Classic

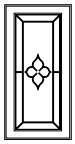
Etched

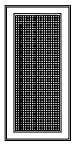
Layered

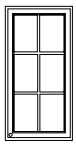
Mullion


Textured

GD

PE	CH
APC	IF
APFC	TWR
FPEB	WR
MI	XS
DE	XSG
OE	● GD
AD_E	RTK
CW	RTKP
RD	TKD
ID	

- For complete listing of glass door specifications, see Decorative Doors and Inserts section of this book
- Annealed Glass

  Glass that has been cooled with precise control to relieve stress introduced by the manufacturing process. This annealing process makes the glass workable, i.e. easier to cut, machine, etc. Common household glass is annealed glass. It is ***NOT*** safety glass
- Laminated Safety Glass

  When broken, laminated safety glass is held together by the adhesives that are used in the manufacturing process. This generally helps keep large pieces of glass from falling from the opening. Nevertheless, small pieces and/or chips may still fall, and the precise size of pieces of glass that will break is difficult to identify and describe
- Tempered Glass

  Tempering uses either a thermal or chemical process to quickly harden the glass, which compresses its surface. Compressing the surface increases the amount of tensile stress that can be endured before breakage occurs. When it does break, tempered glass generally breaks into very small pieces
- ***Note:*** Most doors (12" or wider and up to 62" high) can be supplied prepared for glass, with glass inserts, Mullion glass or Aluminum Frame doors

---

Full-Height Doors

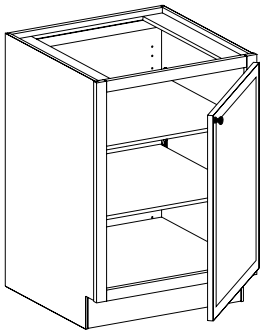

FHB

Full Height Both Sides (Peninsula cabinets only)

FHK

Full Height Kitchen Side (Standard and peninsula cabinets)

FHP

Full Height Peninsula Side (Peninsula cabinets only)

PE	CH
APC	IF
APFC	TWR
FPEB	WR
MI	XS
DE	XSG
OE	GD
AD_E	RTK
CW	RTKP
RD	TKD
ID	

- This option is designed to replace a drawer and door combination with a full-height door. Any cabinet that has accessories in the top drawer, (Example: BCC36); or a stack of drawers next to door, (Example: VCD42) is ***not*** available in this option
- Available in select base, vanity and desk cabinets
- Change Width (CW) option ***not*** available
- Change Height (CH) option ***not*** available

Deluxe Raised or Recessed Panel Drawer Front

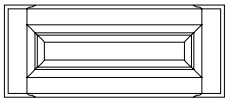
Raised Panel


Recessed Panel

DRPD

PE	CH
APC	IF
APFC	TWR
FPEB	WR
MI	XS
DE	XSG
OE	GD
AD_E	RTK
CW	RTKP
RD	TKD
ID	

- Converts standard drawer front to a five-piece design
- Available on Amhurst, Brookfield, Durango, Fox Chase (Half & Full), Garrison, Grandview (Half & Full), Melrose, Morristown, Putnam, Renway, and Trumbull. Reference the door style section for specific details on drawer front design by size

Classic Drawer Front

CLDF



- Available on Cornell, Jovana, Lyndale (Half & Full), Marquette, Northbrook, Polarcrest, Sedona and Shepparton

PE	CH
APC	IF
APFC	TWR
FPEB	WR
MI	XS
DE	XSG
OE	GD
AD_E	RTK
CW	RTKP
RD	TKD
ID	

Finger Pull Routing

FPR

Standard Base Cabinet Door Pull

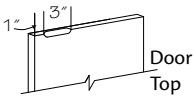

Standard Wall Cabinet Door Pull

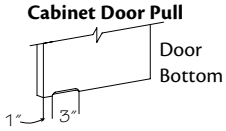

Base Drawer Front B12"–B27"

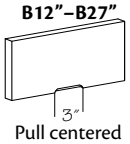

Pull centered at bottom

Base Drawer Front B30"–B48"

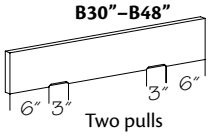

Two pulls at bottom

- Finger Pull Routing (FPR) is done on the backside of the door or drawer front, opposite of hinging
- Available on Fox Chase Roman & Square–Half, Grandview Roman & Square–Half, Harper and Lyndale–Half
- You ***must*** specify FPR after each cabinet that requires Finger Pull Routing
- Order Example: B18R•FH-FPR
- Drawer heads 30" and wider will receive two routs
- False fronts on sink bases will be routed with this option

PE	CH
APC	IF
APFC	TWR
FPEB	WR
MI	XS
DE	XSG
OE	GD
AD_E	RTK
CW	RTKP
RD	TKD
ID	

Void All Doors and Drawer Fronts

VDA

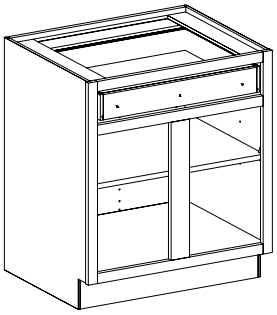

- All cabinets can be ordered with VDA. This option removes all doors and drawer fronts. Drawer boxes remain. Hinges are ***not*** included
- ***Note:*** VDA only removes doors and drawer fronts. Tambour units, panels and center stiles will still be attached

PE	CH
APC	IF
APFC	TWR
FPEB	WR
MI	XS
DE	XSG
OE	GD
AD_E	RTK
CW	RTKP
RD	TKD
ID	

Void Doors Only

VDO

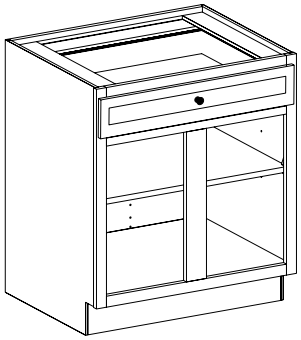

- Cabinets with a door and drawer combination may be ordered with VDO. This option removes all doors. Drawer fronts and boxes remain. Hinges are ***not*** included

PE	CH
APC	IF
APFC	TWR
FPEB	WR
MI	XS
DE	XSG
OE	GD
AD_E	RTK
CW	RTKP
RD	TKD
ID	

Void Top Drawer Box

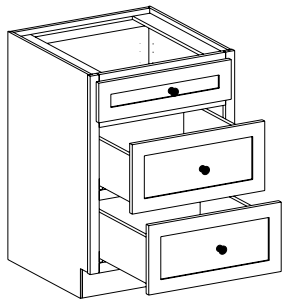

VTDW

- This option removes top drawer box and runner system on multi-drawer stacks
- Drawer fronts will be attached as a false front
- ***Note:*** This option will affect the top drawer only on a cabinet

PE	CH
APC	IF
APFC	TWR
FPEB	WR
MI	XS
DE	XSG
OE	GD
AD_E	RTK
CW	RTKP
RD	TKD
ID	

Void All Drawer Boxes

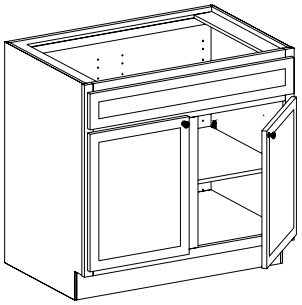

VDW

- This option removes all drawer boxes and runner systems
- Drawer fronts will be attached as a false front
- ***Note:*** This option will affect all drawers on a cabinet. You ***cannot*** specify single drawers on a multi-drawer cabinet

PE	CH
APC	IF
APFC	TWR
FPEB	WR
MI	XS
DE	XSG
OE	GD
AD_E	RTK
CW	RTKP
RD	TKD
ID	

Prep for Warming Drawer

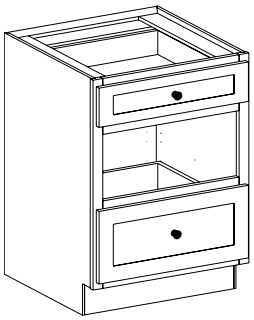

PWD

Cut out dimensions

Cabinet	Min Wd	Max Wd	Min Ht	Max Ht
BPPS24	21″	22½″	9½″	10″
BPPS27	24″	25½″	9½″	10″
BPPS30	27″	28½″	9½″	10″
BPPS33	30″	31½″	9½″	10″
BPPS36	36″	34½″	9½″	10″

- This option removes the center drawer box, drawer front and runner system of a BPPS to allow for field installation of a warming drawer only
- Check manufacturer's requirements before ordering
- Available on BPPS 24–36
- Order Example: BPPS 30-PWD

PE	CH
APC	IF
APFC	TWR
FPEB	WR
MI	XS
DE	XSG
OE	GD
AD_E	RTK
CW	RTKP
RD	TKD
ID	

Scoop Top Drawer

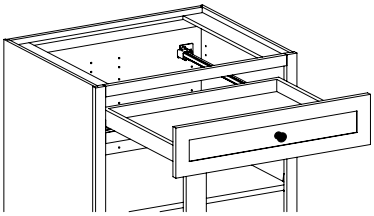

STDW

- Reduced height drawer box for top drawer of base cabinet only
- 4″ high drawer box reduced to 2 1/4″ solid wood
- 7″ high drawer box reduced to 4″ solid wood
- 11″ high drawer box reduced to 7″ plywood

PE	CH
APC	IF
APFC	TWR
FPEB	WR
MI	XS
DE	XSG
OE	GD
AD_E	RTK
CW	RTKP
RD	TKD
ID	

Wastebasket Drawer Partition

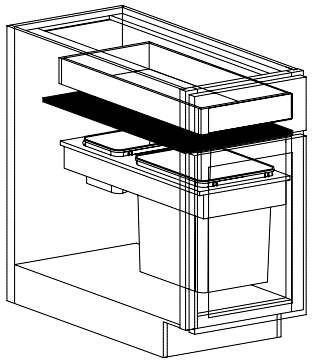

WDP

- Partition between the wastebasket and top drawer
- Available on all Wastebasket cabinets with a top drawer
- ***Not*** available with Integrated Decorative End (DE) Option
- ***Not*** available with Operational End Door (OE) option

PE	CH
APC	IF
APFC	TWR
FPEB	WR
MI	XS
DE	XSG
OE	GD
AD_E	RTK
CW	RTKP
RD	TKD
ID	

Recessed Toe Kick

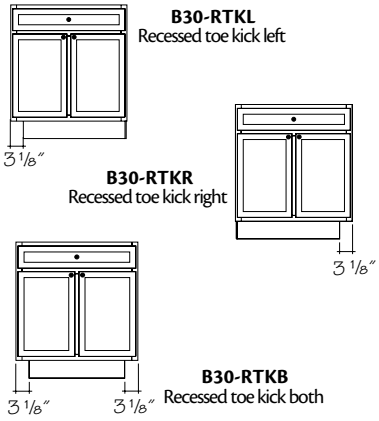

RTKB Both
RTKL Left
RTKR Right

- Most Base, Tall and Vanity cabinets can be ordered with a recessed toe kick. Consult option availability chart for desired cabinet
- You ***must*** specify end or ends to receive recessed toe kick
- Painted hardwood supplied for EverCore™
- Additional bottom support is recommended when using RTKB on peninsula cabinets wider than 27"
- RTK and WR ***not*** available on same cabinet except when combining WR_K and RTKP options
- ***Not*** available on 93" and 96" high tall cabinets
- Change Width (CW) option ***not*** available
- Change Height (CH) option ***not*** available

PE	CH
APC	IF
APFC	TWR
FPEB	WR
MI	XS
DE	XSG
OE	GD
AD_E	● RTK
CW	RTKP
RD	TKD
ID	

We recommend Recessed Toe Kicks (RTKR or RTKL) on base cabinets at the end of peninsula runs or island applications.

Recessed Toe Kick Peninsula

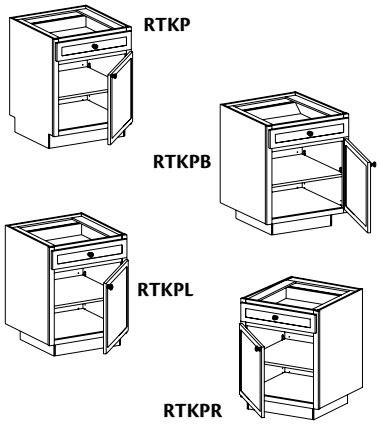

RTKP Back
RTKPB Back and both sides
RTKPL Back and left side
RTKPR Back and right side

- Select Base and Office Cabinets may be ordered with a Recessed Toe Kick on the back (Peninsula) side. Consult option availability chart for desired cabinet
- You ***must*** specify end or ends to receive Recessed Toe Kick Peninsula
- Painted hardwood supplied for EverCore™
- Additional bottom support is recommended when using RTKPB on cabinets wider than 27"
- RTK and WR ***not*** available on same cabinet except when combining WR_K and RTKP options
- ***Not*** available on cabinets less than 21" deep
- Change Width (CW) option ***not*** available
- Change Height (CH) option ***not*** available

PE	CH
APC	IF
APFC	TWR
FPEB	WR
MI	XS
DE	XSG
OE	GD
AD_E	RTK
CW	● RTKP
RD	TKD
ID	

Void Toe Kick

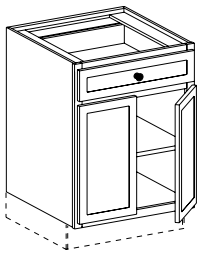

VTK

- Select Base, Tall, Office, Furniture and Vanity Cabinets may be ordered without the toe kick
- Allows decorative feet to be used under cabinet
- Decorative feet or legs should support the cabinet by way of the end panels, ***not*** the cabinet floor
- Full overlay door styles are ***not*** to be placed directly on the floor
- Cabinets are ***not*** intended to be free-standing units, they ***must*** be attached to a wall stud or anchored to the floor to achieve sufficient stability
- ***Not*** available on Passport cabinets
- ***Not*** available on 93" and 96" high tall cabinets
- ***Not*** available with Wide Rail (WR) option
- ***Not*** available on cabinets with a decorative toe kick

PE	CH
APC	IF
APFC	TWR
FPEB	WR
MI	XS
DE	XSG
OE	GD
AD_E	RTK
CW	RTKP
RD	TKD
ID	

New

Toe Kick Drawer

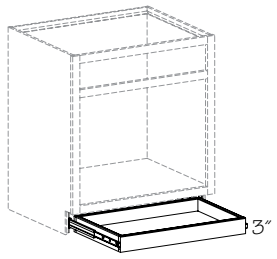

TKD

Grey color coding indicates new product, size or code.

PE	CH
APC	IF
APFC	TWR
FPEB	WR
MI	XS
DE	XSG
OE	GD
AD_E	RTK
CW	RTKP
RD	● TKD
ID	

- Available on cabinets 12″ to 42″ wide
- Available on cabinets 18″ to 24″ deep
- ***Not*** available on 93″ and 96″ Utility cabinets
- ***Not*** available with the following cabinet types: Wall cabinets, corner cabinets, angled cabinets, CoreGuard Sink Base, Passport cabinets
- ***Cannot*** be used with Operational Ends (OE)
- Push-to-open side-mount drawer runners (does ***not*** include soft-close) - with 100 pound weight capacity
- Drawer box is 3″ high - 3/4″ thick front, back and sides
- Drawer has 2 3/4″ clearance to bottom of cabinet face frame
- Do ***not*** use the Toe Kick Drawer as a stepping platform
- 7/8″ clearance between the bottom of the end panel to the bottom of the drawer box
- Matching Toe Kick required - field trimmed/installed
- ***Cannot*** be used where obstacles protrude from the floor
- ***Note:*** Toe kick lighting must be recessed behind the cabinet with Toe Kick Drawers

Notes

Wall Cabinets

WR	30	12
code	width	height

Construction Options and Modifications

❖ Included as standard
● Available with an upcharge
☆ Available with exceptions
(Blank) ***Not*** available

PE	Plywood Ends
APC	All Plywood Construction
APFC	All Plywood Furniture Construction
FPEB	Furniture Plywood Ends
MI	Matching Interior
DE	Integrated Decorative End
OE	Operational End
AD_E	Attached Decorative End
CW	Change Width
RD	Reduced Depth
ID	Increased Depth
CH	Change Height
TWR	Top Wide Rail
XS	Extended Stile
XSG	Integrated Extended Stile
GD	Glass Doors

Note: Standard wall cabinet box depth is 12″ unless stated otherwise. Add door thickness with bumpers for total depth.

Note: Wall cabinets with standard matching Viraguard interior, or Wall cabinets ordered with matching Viraguard interior option will be supplied with Natural Birch exterior material. Wall cabinets with standard matching interior, Wall cabinets ordered with APC, FPEB or APF, or Wall cabinets ordered with MIP, MIFP, MIAPFC will have exterior floors and ceilings that are finished to match.

Caution: Installation of a wall cabinet 30″ or wider requires additional support, such as attachment to a soffit, or support from below. Failure to provide additional support could result in collapse of the cabinet, serious personal injury, or property damage. Damage relating to failure to provide additional support is ***not*** covered by the limited warranty. See inside cover for warranty details

Material dimensions listed may vary slightly from actual dimensions of the product.

Specifications subject to change without notice.

Wall Single Door 12”-42” H

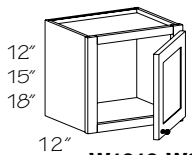

W1212-W2418

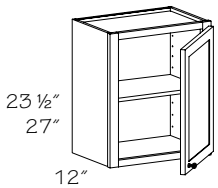

W924-W2427

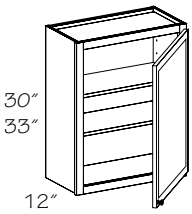

W930-W2433

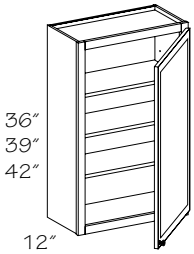

W936-W2442

Specify R or L
No shelf
12” High
❒ **W1212 R or L**
❒ **W1512 R or L**
❒ **W1812 R or L**
❒ **W2112 R or L**

15” High
W1215 R or L
W1515 R or L
W1815 R or L
W2115 R or L

18” High
W1218 R or L
W1518 R or L
W1818 R or L
W2118 R or L
W2418 R or L

One shelf
23 1/2” High
❍❄✣ **W924 R or L**
W1224 R or L
W1524 R or L
W1824 R or L
W2124 R or L
W2424 R or L

27” High
▲❒❍ **W1527 R or L**
▲❒❍ **W1827 R or L**
▲❒❍ **W2427 R or L**

Specify R or L
Two shelves
30” High
❄❍✣ **W930 R or L**
W1230 R or L
W1530 R or L
W1830 R or L
W2130 R or L
W2430 R or L

33” High
❄❍✣ **W933 R or L**
W1233 R or L
W1533 R or L
W1833 R or L
W2133 R or L
W2433 R or L

Three shelves
36” High
❄❍✣ **W936 R or L**
W1236 R or L
W1536 R or L
W1836 R or L
W2136 R or L
W2436 R or L

39” High
❄❍✣▲**W939 R or L**
▲**W1239 R or L**
▲**W1539 R or L**
▲**W1839 R or L**
▲**W2139 R or L**
▲**W2439 R or L**

42” High
❄❍✣▲**W942 R or L**
▲**W1242 R or L**
▲**W1542 R or L**
▲**W1842 R or L**
▲**W2142 R or L**
▲**W2442 R or L**

●	PE
●	APC
●	APFC
●	FPEB
●	MI
●	DE
☆	OE
●	AD_E
☆	CW
☆	RD
☆	ID
☆	CH
☆	TWR
●	XS
☆	XSG
☆	GD

- Adjustable shelves
- ☆ Integrated Extended Stile (XSG) only available on cabinets 30” high or higher
- ☆ Operational End (OE) is ***not*** available with Increased Depth (ID) or Reduced Depth (RD) options

Tip: When mounting a 6” Spice Drawer (SD—) or Organizer (O—) underneath a 23 1/2” cabinet next to a 30” high wall cabinet, the overall height will be 29 1/2”. To correct this, you can place a piece of Stack Molding (STM8) or a 1/2” filler between the 23 1/2” cabinet and the 6” cabinet.

Remember, all 9” wide doors in 1/2” overlay will be square even for a roman door style. If a 9” cabinet is required, one suggestion is to void the door and order the cabinet with matching interior and use it as a decorative open cabinet.

Any wall cabinet over 24″ wide or 30″ high or higher with a depth greater than 12″ and/or with butt doors ***must*** be installed between two (2) cabinets, a cabinet and a wall or supported from below

❒ Change Height (CH) option ***not*** available
❍ Change Width (CW) option ***not*** available
❄ Doors are square except full overlay arch door styles. Thermofoil door styles will always be square. Vanderbilt doors will have a solid, recessed flat panel
✣ Glass door option ***not*** available
▲ Top Wide Rail (TWR) option ***not*** available

Caution: *Installation of a wall cabinet 30″ or wider requires additional support, such as attachment to a soffit, or support from below.*

Wall Single Door 48″ and 54″ H

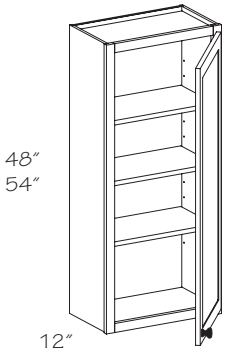

Specify R or L
Three shelves
48″ High

❄❍+ **W948 R or L**
W1248 R or L
W1548 R or L
W1848 R or L
W2148 R or L
W2448 R or L

Four shelves
54″ High

❄❍+ **W954 R or L**
W1254 R or L
W1554 R or L
W1854 R or L
W2154 R or L
W2454 R or L

❄ Doors are square except full overlay arch door styles. Thermofoil door styles will always be square. Vanderbilt doors will have a solid, recessed flat panel
❍ Change Width (CW) option ***not*** available
\+ Glass door option ***not*** available

Any wall cabinet over 24″ wide or 30″ high or higher with a depth greater than 12″ and/or with butt doors ***must*** be installed between two (2) cabinets, a cabinet and a wall or supported from below

- Adjustable shelves
- Shelves shipped separately
- Available in full overlay door styles only

☆ ***Not*** available with Camed glass door (GD) option
☆ ***Not*** available with Mullion glass doors (GD) option
☆ ***Not*** available with Prepared for Glass (GD) option
☆ Modern Frosted (MRT) and Moire (MOI) Glass Inserts ***not*** available on 54″ H cabinets
☆ Maximum Increased Depth (ID) is 15″
☆ Operational End (OE) is ***not*** available with Increased Depth (ID) or Reduced Depth (RD) options

●	PE
●	APC
●	APFC
●	FPEB
●	MI
●	DE
☆	OE
●	AD_E
☆	CW
☆	RD
☆	ID
●	CH
	TWR
●	XS
●	XSG
☆	GD

When using 48″–54″ high cabinets or tall stacked cabinet combinations, remember to supply the best height Tall End Panel (TEP) for your design needs. Both 108″ and 120″ panels can be field cut to height requirements of your design

Wall Double Door 12″-42 H

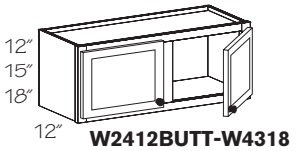

W2412BUTT-W4318

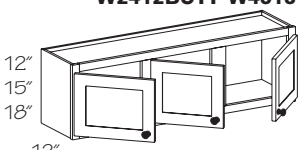

W4512-W4818

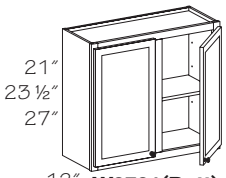

W2721(Butt)-W3727 BUTT

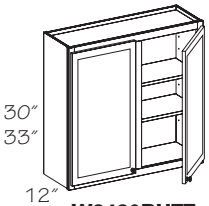

W2430BUTT-W4833

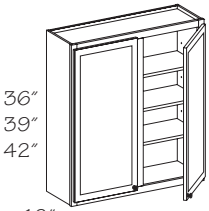

W2436 BUTT-W4842

No shelf
12″ High

❍❒ **W2412 BUTT**
❒ **W2712 (Butt)**
❒ **W3012**
❒ **W3012 BUTT**
❒ **W3312**
❒ **W3312 BUTT**
❍❒ **W3412 BUTT**
❒ **W3612**
❒ **W3612 BUTT**
☆❍❒ **W3712 BUTT**
☆❒ **W3912**
☆❒ **W4212**
☆❍❒ **W4312**
☆❒■ **W4512**
☆❒■ **W4812**

15″ High

❍ **W2415 BUTT**
W2715 (Butt)
W3015
W3015 BUTT
W3315
W3315 BUTT
❍❒ **W3415 BUTT**
W3615
W3615 BUTT
☆❍❒ **W3715 BUTT**
☆ **W3915**
☆ **W4215**
☆❍❒ **W4315**
☆■ **W4515**
☆■ **W4815**

18″ High

❍ **W2418 BUTT**
W2718 (Butt)
W3018
W3018 BUTT
W3318
W3318 BUTT
❍❒ **W3418 BUTT**
W3618
W3618 BUTT
☆❍❒ **W3718 BUTT**
☆ **W3918**
☆ **W4218**
☆❍❒ **W4318**
☆■ **W4518**
☆■ **W4818**

One shelf
21″ High

W2721 (Butt)
W3021
W3021 BUTT
W3321
W3321 BUTT
❍ **W3421 BUTT**
W3621
W3621 BUTT
☆❍ **W3721 BUTT**
☆ **W3921**
☆ **W4221**

23 1/2″ High

❍ **W2424 BUTT**
W2724 (Butt)
W3024
W3024 BUTT
W3324
W3324 BUTT
❍❒ **W3424 BUTT**
W3624
W3624 BUTT
☆❍❒ **W3724 BUTT**
☆ **W3924**
☆ **W4224**
☆ **W4524**
☆ **W4824**

27″ High

❍❒▲ **W2427 BUTT**
❍❒▲ **W2727 (butt)**
❍❒▲ **W3027**
❍❒▲ **W3027 BUTT**
❍❒▲ **W3327**
❍❒▲ **W3327 BUTT**
❍❒▲ **W3427 BUTT**
❍❒▲ **W3627**
❍❒▲ **W3627 BUTT**
☆❍❒▲**W3727 BUTT**

Two Shelves
30″ High

❍ **W2430 BUTT**
W2730 (Butt)
W3030
W3030 BUTT
W3330
W3330 BUTT
❍ **W3430 BUTT**
W3630
W3630 BUTT
❍❒☆ **W3730 BUTT**
☆ **W3930**
☆ **W4230**
☆ **W4530**
☆ **W4830**

33″ High

❍ **W2433 BUTT**
W2733 (Butt)
W3033
W3033 BUTT
W3333
W3333 BUTT
W3633
W3633 BUTT
☆ **W3933**
☆ **W4233**
☆ **W4533**
☆ **W4833**

Three shelves
36″ High

❍ **W2436 BUTT**
W2736 (Butt)
W3036
W3036 BUTT
W3336
W3336 BUTT
W3636
W3636 BUTT
☆ **W3936**
☆ **W4236**
☆ **W4536**
☆ **W4836**

39″ High

❍▲**W2439 BUTT**
▲ **W2739 (Butt)**
▲ **W3039**
▲ **W3039 BUTT**
▲ **W3339**
▲ **W3339 BUTT**
▲ **W3639**
▲ **W3639 BUTT**
☆▲ **W3939**
☆▲ **W4239**
☆▲ **W4539**
☆▲ **W4839**

42″ High

❍▲ **W2442 BUTT**
▲ **W2742 (Butt)**
▲ **W3042**
▲ **W3042 BUTT**
▲ **W3342**
▲ **W3342 BUTT**
▲ **W3642**
▲ **W3642 BUTT**
☆▲ **W3942**
☆▲ **W4242**
☆▲ **W4542**
☆▲ **W4842**

❍ Change Width (CW) option ***not*** available
❒ Change Height (CH) option ***not*** available
☆ ***Not*** available in Increased Depth (ID)
▲ Top Wide Rail (TWR) option ***not*** available
■ Glass inserts ***not*** available on ends

- Adjustable shelves

☆ Integrated Extended Stile (XSG) only available on cabinets 30″ high or higher
☆ Operational End (OE) is ***not*** available with Increased Depth (ID) or Reduced Depth (RD) options
- 33″-37″ wide wall cabinets with BUTT doors have wood veneer plywood shelves

●	PE
●	APC
●	APFC
●	FPEB
●	MI
●	DE
☆	OE
●	AD_E
☆	CW
☆	RD
☆	ID
☆	CH
☆	TWR
●	XS
☆	XSG
☆	GD

Remember, a cabinet designated BUTT or (Butt) has no center stile. When you see the word BUTT in all capitals, it ***must*** be included as part of your ordering nomenclature, a (Butt) in parentheses is for your information and isn't required on an order form

Any wall cabinet over 24″ wide or 30″ high or higher with a depth greater than 12″ and/or with butt doors ***must*** be installed between two (2) cabinets, a cabinet and a wall or supported from below

Tip: When mounting a 6″ Spice Drawer (SD—) or Organizer (O—) underneath a 23 1/2″ cabinet next to a 30″ high wall cabinet, the overall height will be 29 1/2″. To correct this, you can place a piece of Stack Molding (STM8) or a 1/2″ filler between the 23 1/2″ cabinet and the 6″ cabinet.

Caution: *Installation of a wall cabinet 30″ or wider requires additional support, such as attachment to a soffit, or support from below.*

Wall Double Door 48″ and 54″ H

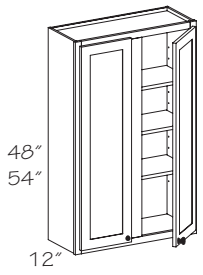

Three shelves 48″ High	*Four shelves 54″ High*
❄❍**W2448 BUTT**	❄❍**W2454 BUTT**
W2748 (Butt)	**W2754 (Butt)**
W3048	**W3054**
W3048 BUTT	**W3054 BUTT**
W3348	**W3354**
W3348 BUTT	**W3354 BUTT**
W3648	**W3654**
W3648 BUTT	**W3654 BUTT**

❄ Doors are square except full overlay arch door styles. Thermofoil door styles will always be square. Vanderbilt doors will have a solid, recessed flat panel

❍ Change Width (CW) option ***not*** available

- Adjustable shelves
- Shelves shipped separately
- Available in full overlay door styles only
- ***Not*** available with Mullion Strip Wall (MSW)

☆ ***Not*** available with Camed glass door (GD) option

☆ ***Not*** available with Mullion glass doors (GD) option

☆ ***Not*** available with Prepared for Glass (GD) option

☆ Modern Frosted (MRT) and Moire (MOI) Glass Inserts ***not*** available on 54″ H cabinets

☆ Maximum Increased Depth (ID) is 15″

☆ Operational End (OE) is ***not*** available with Increased Depth (ID) or Reduced Depth (RD) options

● PE
● APC
● APFC
● FPEB
● MI
● DE
☆ OE
● AD_E
☆ CW
☆ RD
☆ ID
● CH
TWR
● XS
● XSG
☆ GD

When using 48″–54″ high cabinets or tall stacked cabinet combinations, remember to supply the best height Tall End Panel (TEP) for your design needs. Both 108″ and 120″ panels can be field cut to height requirements of your design

Any wall cabinet over 24″ wide or 30″ high or higher with a depth greater than 12″ and/or with butt doors ***must*** be installed between two (2) cabinets, a cabinet and a wall or supported from below

Wall Refrigerator 24″ Deep

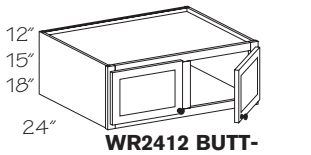

WR2412 BUTT-WR4318

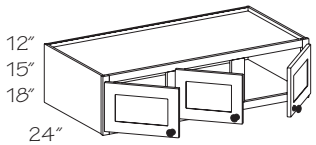

WR4512-WR4818

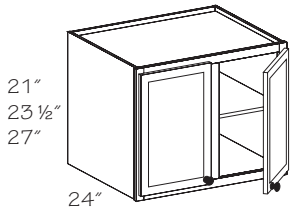

WR3021-WR3727 BUTT

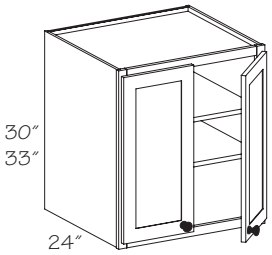

WR2430 BUTT-WR3633 BUTT

No shelf 12″ High

❒❍✛**WR2412 BUTT**
❒✛ **WR2712 (Butt)**
❒✛ **WR3012**
❒✛ **WR3012 BUTT**
❒✛ **WR3312**
❒✛ **WR3312 BUTT**
❒❍✛**WR3412 BUTT**
❒✛ **WR3612**
❒✛ **WR3612 BUTT**
❒❍✛**WR3712 BUTT**
❒✛ **WR3912**
❒✛ **WR4212**
❒❍✛**WR4312**
❒✛ **WR4512**
❒✛ **WR4812**

15″ High

❍✛ **WR2415 BUTT**
✛ **WR2715 (Butt)**
✛ **WR3015**
✛ **WR3015 BUTT**
✛ **WR3315**
✛ **WR3315 BUTT**
❍❐✛**WR3415 BUTT**
✛ **WR3615**
✛ **WR3615 BUTT**
❍❐✛**WR3715 BUTT**
✛ **WR3915**
✛ **WR4215**
❍❐✛**WR4315**
✛ **WR4515**
✛ **WR4815**

18″ High

❍ **WR2418 BUTT**
WR2718 (Butt)
WR3018
WR3018 BUTT
WR3318
WR3318 BUTT
❍❐ **WR3418 BUTT**
WR3618
WR3618 BUTT
❍❐ **WR3718 BUTT**
WR3918
WR4218
❍❐ **WR4318**
WR4518
WR4818

One shelf 21″ High

WR3021
WR3021 BUTT
WR3321
WR3321 BUTT
❍ **WR3421 BUTT**
WR3621
WR3621 BUTT
❍ **WR3721 BUTT**
WR3921
WR4221

23 1/2″ High

❍ **WR2424 BUTT**
WR2724 (Butt)
WR3024
WR3024 BUTT
WR3324
WR3324 BUTT
❍❐ **WR3424 BUTT**
WR3624
WR3624 BUTT
❍❐ **WR3724 BUTT**
WR3924

27″ High

❒❍▲**WR3027**
❒❍▲**WR3027 BUTT**
❒❍▲**WR3327**
❒❍▲**WR3327 BUTT**
❒❍▲**WR3427 BUTT**
❒❍▲**WR3627**
❒❍▲**WR3627 BUTT**
❒❍▲**WR3727 BUTT**

Two shelves 30″ High

❍ **WR2430 BUTT**
WR2730 (Butt)
WR3030
WR3030 BUTT
WR3330
WR3330 BUTT
❍❐ **WR3430 BUTT**
WR3630
WR3630 BUTT
❍❐ **WR3730 BUTT**

33″ High

❍ **WR2433 BUTT**
WR2733 (Butt)
WR3033
WR3033 BUTT
WR3333
WR3333 BUTT
WR3633
WR3633 BUTT

● PE
● APC
● APFC
● FPEB
● MI
● DE
OE
☆ AD_E
☆ CW
● RD
☆ ID
☆ CH
☆ TWR
● XS
☆ XSG
● GD

❒ Change Height (CH) option ***not*** available
❍ Change Width (CW) option ***not*** available
✛ Attached Decorative Ends (AD_E) option ***not*** available
▲ Top Wide Rail (TWR) option ***not*** available

- Additional support required

☆ Integrated Extended Stile (XSG) only available on cabinets 30″ high or higher

☆ Maximum Increased Depth (ID) for Wall Refrigerator cabinets is 27″

- 33″-37″ wide wall cabinets with BUTT doors have wood veneer plywood shelves

When designing a built-in refrigerator area, remember that many side by side refrigerators measure up to 36″ wide. If you have the extra space, it is recommended to use a 37″ wide Wall Refrigerator (WR) cabinet to assure clearance for the appliance. Also, verify the height of the appliance to make sure you are using the correct Wall Refrigerator cabinet.

Caution: *Installation of a wall cabinet 30″ or wider requires additional support, such as attachment to a soffit, or support from below.*

Wall Top Hinge Cabinet 12" Deep



WTHG3012-
WTHG3618

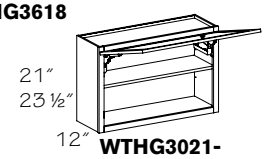

WTHG3021-
WTHG3624

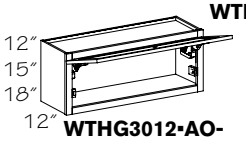

WTHG3012▪AO-
WTHG3618▪AO

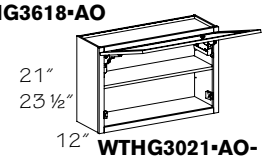

WTHG3021▪AO-
WTHG3624▪AO

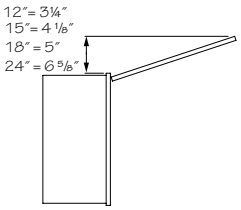

No shelf *12" High*	*With Auto-open Kit* *No shelf* *12" High*
WTHG1512	**WTHG1512 ▪AO**
WTHG2412	**WTHG2412 ▪AO**
WTHG3012	**WTHG3012 ▪AO**
WTHG3612	**WTHG3612 ▪AO**
15" High	*15" High*
WTHG1515	**WTHG1515 ▪AO**
WTHG2415	**WTHG2415 ▪AO**
WTHG3015	**WTHG3015 ▪AO**
WTHG3615	**WTHG3615 ▪AO**
18" High	*18" High*
WTHG1518	**WTHG1518 ▪AO**
WTHG2418	**WTHG2418 ▪AO**
WTHG3018	**WTHG3018 ▪AO**
WTHG3618	**WTHG3618 ▪AO**
One Shelf *21" High*	*One Shelf* *21" High*
WTHG3021	**WTHG3021 ▪AO**
WTHG3621	**WTHG3621 ▪AO**
23 1/2" High	*23 1/2" High*
WTHG1524	**WTHG1524 ▪AO**
WTHG2424	**WTHG2424 ▪AO**
WTHG3024	**WTHG3024 ▪AO**
WTHG3624	**WTHG3624 ▪AO**

●	PE
●	APC
●	APFC
●	FPEB
●	MI
●	DE
	OE
●	AD_E
	CW
	RD
●	ID
	CH
	TWR
●	XS
	XSG
☆	GD

- Adjustable shelves
- Additional support is required
- Adjustable Soft-Close lift mechanism standard
- With the Auto-open Kit (AO), pressing lower corners of cabinet door triggers auto-open. Pressing a button on activator switch triggers auto-close. Doors can be operated manually if desired. Multiple units can also be synced to open and close simultaneously with the push of one button
- Auto-open Kit (AO) requires 110V power source, preferably above cabinet
- Auto-open Kit (AO) feature offers programmable stop
- Permaset bumpers are ***not*** included on doors ordered with the Auto-open Kit (AO)
- 30–36" wide wall cabinets have wood veneer plywood shelves

☆ Antiquity Glass Insert (ATQ) ***not*** available on 36" wide cabinet

☆ ***Not*** available with Crossroads (CRO), Modern Textured (MRT) and Moire (MOI) Glass Inserts

☆ Prep for Glass (DRS▪PREP) ***not*** available

☆ ***Not*** available with Mullion glass doors (GD) option

☆ ***Not*** available with Camed glass door (GD) option

- Installation instructions supplied with Auto-open Kit (AO); read thoroughly
- ***Note:*** Auto-open Kit (AO) requires field installation
- ***Note:*** Square doors will be supplied when ordered in arched door styles
- ***Note:*** Wall Top Hinge (WTHG) and Wall Refrigerator Top Hinge (WRTHG) cabinets ***cannot*** be installed directly against the ceiling. Refer to the clearance diagram in this section

Tip: When mounting a 6" Spice Drawer (SD—) or Organizer (O—) underneath a 23 1/2" cabinet next to a 30" high wall cabinet, the overall height will be 29 1/2". To correct this, you can place a piece of Stack Molding (STM8) or a 1/2" filler between the 23 1/2" cabinet and the 6" cabinet.

Any wall cabinet over 24" wide or 30" high or higher with a depth greater than 12" and/or with butt doors ***must*** be installed between two (2) cabinets, a cabinet and a wall or supported from below

Wall Refrigerator Top Hinge 24" Deep



WRTHG3012-
WRTHG3618

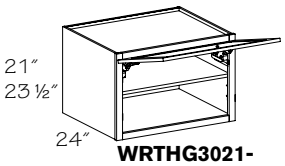

WRTHG3021-
WRTHG3624



WRTHG3012▪AO-
WRTHG3618▪AO

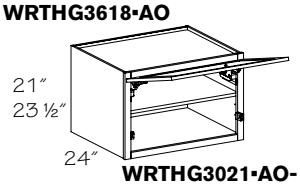

WRTHG3021▪AO-
WRTHG3624▪AO

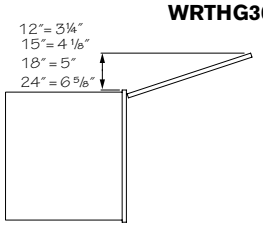

No shelf *12" High*	*With Auto-open Kit* *No shelf* *12" High*
+ **WRTHG3012**	+ **WRTHG3012 ▪AO**
+ **WRTHG3612**	+ **WRTHG3612 ▪AO**
15" High	*15" High*
+ **WRTHG3015**	+ **WRTHG3015 ▪AO**
+ **WRTHG3615**	+ **WRTHG3615 ▪AO**
18" High	*18" High*
WRTHG3018	**WRTHG3018 ▪AO**
WRTHG3618	**WRTHG3618 ▪AO**
One Shelf *21" High*	*One Shelf* *21" High*
WRTHG3021	**WRTHG3021 ▪AO**
WRTHG3621	**WRTHG3621 ▪AO**
23 1/2" High	*23 1/2" High*
WRTHG3024	**WRTHG3024 ▪AO**
WRTHG3624	**WRTHG3624 ▪AO**

+ Attached Decorative Ends (AD_E) option ***not*** available

●	PE
●	APC
●	APFC
●	FPEB
●	MI
●	DE
	OE
☆	AD_E
	CW
☆	RD
●	ID
	CH
	TWR
●	XS
	XSG
☆	GD

- Adjustable shelves
- Additional support is required
- With the Auto-open Kit (AO), pressing lower corners of cabinet door triggers auto-open. Pressing a button on activator switch triggers auto-close. Doors can be operated manually if desired. Multiple units can also be synced to open and close simultaneously with the push of one button
- Auto-open Kit (AO) requires 110V power source, preferably above cabinet
- Auto-open Kit (AO) feature offers programmable stop
- 30–36" wide wall cabinets have wood veneer plywood shelves
- Permaset bumpers are ***not*** included on doors ordered with the Auto-open Kit (AO)

☆ Antiquity Glass Insert (ATQ) ***not*** available on 36" wide cabinet

☆ Prep for Glass (DRS▪PREP) ***not*** available

☆ ***Not*** available with Crossroads (CRO), Modern Textured (MRT) and Moire (MOI) Glass Inserts

☆ ***Not*** available with Mullion glass doors (GD) option

☆ ***Not*** available with Camed glass door (GD) option

☆ Minimum Reduced Depth (RD) is 12"

- Installation instructions supplied with Auto-open Kit (AO); read thoroughly
- Maximum Increased Depth (ID) for Wall Refrigerator cabinets is 27"
- ***Note:*** Auto-open Kit (AO) requires field installation
- ***Note:*** Square doors will be supplied when ordered in arched door styles
- ***Note:*** Wall Top Hinge (WTHG) and Wall Refrigerator Top Hinge (WRTHG) cabinets ***cannot*** be installed directly against the ceiling. Refer to the clearance diagram in this section

Caution: *Installation of a wall cabinet 30" or wider requires additional support, such as attachment to a soffit, or support from below.*

Wall Stack Cabinet 48", 51" and 54" H

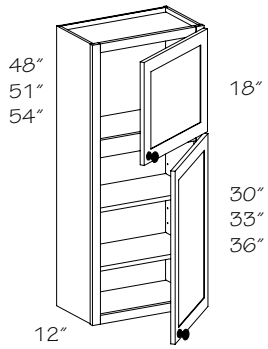

Specify R or L
Two shelves
48" High

❄❍✛ **WST948 R or L**
WST1248 R or L
WST1548 R or L
WST1848 R or L
WST2148 R or L
WST2448 R or L
❍ **WST2448 BUTT**
WST2748 (Butt)
WST3048
WST3048 BUTT
WST3348
WST3348 BUTT
WST3648
WST3648 BUTT

Two shelves
51" High

❄❍✛ **WST951 R or L**
WST1251 R or L
WST1551 R or L
WST1851 R or L
WST2151 R or L
WST2451 R or L
❍ **WST2451 BUTT**
WST2751 (Butt)
WST3051
WST3051 BUTT
WST3351
WST3351 BUTT
WST3651
WST3651 BUTT

Specify R or L
Three shelves
54" High

❄❍✛ **WST954 R or L**
WST1254 R or L
WST1554 R or L
WST1854 R or L
WST2154 R or L
WST2454 R or L
❍ **WST2454 BUTT**
WST2754 (Butt)
WST3054
WST3054 BUTT
WST3354
WST3354 BUTT
WST3654
WST3654 BUTT

❄ Doors are square except full overlay arch door styles. Thermofoil door styles will always be square. Vanderbilt doors will have a solid, recessed flat panel
❍ Change Width (CW) option ***not*** available
✛ Glass door option ***not*** available

- Two vertical compartments with fixed rail and floor
- Bottom shelves are adjustable
- Shelves shipped separately
- Bottom door is always square
- ***Not*** available with Mullion Strip Wall (MSW)

☆ Integrated Decorative End (DE) option is available in full overlay door styles only
☆ Glass on top and bottom - select glass designs only
☆ Maximum Increased Depth (ID) is 15"
☆ Operational End (OE) is ***not*** available with Increased Depth (ID) or Reduced Depth (RD) options

●	PE
●	APC
●	APFC
●	FPEB
●	MI
☆	DE
☆	OE
●	AD_E
☆	CW
☆	RD
☆	ID
	CH
	TWR
●	XS
●	XSG
☆	GD



When using 48"–54" high cabinets or tall stacked cabinet combinations, remember to supply the best height Tall End Panel (TEP) for your design needs. Both 108" and 120" panels can be field cut to height requirements of your design



Any wall cabinet over 24" wide or 30" high or higher with a depth greater than 12" and/or with butt doors ***must*** be installed between two (2) cabinets, a cabinet and a wall or supported from below

Caution: *Installation of a wall cabinet 30" or wider requires additional support, such as attachment to a soffit, or support from below.*

Peninsula Wall Cabinets

PW	33	30
code	width	height

When BUTT is in all capitals, it ***must*** be included as part of your ordering nomenclature. A (Butt) in parentheses is for your information and isn't required on an order form.

Material dimensions listed may vary slightly from actual dimensions of the product.

Specifications subject to change without notice.

Construction Options and Modifications

- ❖ Included as standard
- ● Available with an upcharge
- ☆ Available with exceptions
- (Blank) ***Not*** available

PE	Plywood Ends
APC	All Plywood Construction
APFC	All Plywood Furniture Construction
FPEB	Furniture Plywood Ends
MI	Matching Interior
DE	Integrated Decorative End
AD_E	Attached Decorative End
CW	Change Width
RD	Reduced Depth
ID	Increased Depth
CH	Change Height
TWR	Top Wide Rail
XS	Extended Stile
XSG	Integrated Extended Stile
GD	Glass Doors

Peninsula Wall Single Door

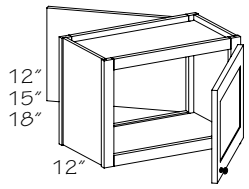

PW1212-PW2118

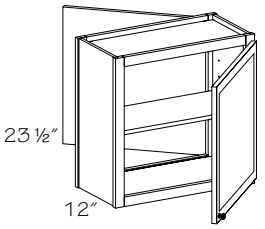

PW1224-PW2424

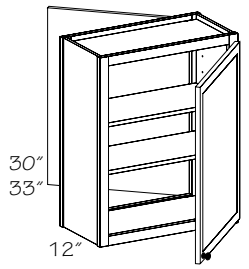

PW930-PW2433

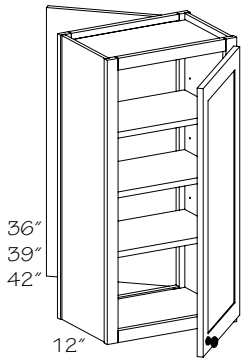

PW936-PW2442

Specify R or L - Kitchen Side Hinging
No Shelf
12" High

❒ **PW1212 R or L**
❒ **PW1512 R or L**
❒ **PW1812 R or L**
❒ **PW2112 R or L**

15" High

PW1215 R or L
PW1515 R or L
PW1815 R or L
PW2115 R or L

18" High

PW1218 R or L
PW1518 R or L
PW1818 R or L
PW2118 R or L

One Shelf
23 1/2" High

PW1224 R or L
PW1524 R or L
PW1824 R or L
PW2124 R or L
PW2424 R or L

Two shelves
30" High

❄❍✛ **PW930 R or L**
PW1230 R or L
PW1530 R or L
PW1830 R or L
PW2130 R or L
PW2430 R or L

33" High

❄❍✛ **PW933 R or L**
PW1233 R or L
PW1533 R or L
PW1833 R or L
PW2133 R or L
PW2433 R or L

Specify R or L - Kitchen Side Hinging
Three shelves
36" High

❄❍✛ **PW936 R or L**
PW1236 R or L
PW1536 R or L
PW1836 R or L
PW2136 R or L
PW2436 R or L

39" High

❄❍✛ **PW939 R or L**
PW1239 R or L
PW1539 R or L
PW1839 R or L
PW2139 R or L
PW2439 R or L

42" High

❄❍✛ **PW942 R or L**
PW1242 R or L
PW1542 R or L
PW1842 R or L
PW2142 R or L
PW2442 R or L

- Right shown
- Adjustable shelves
- Frame backs are ***not*** finished

Any wall cabinet over 24″ wide or 30″ high or higher with a depth greater than 12″ and/or with butt doors ***must*** be installed between two (2) cabinets, a cabinet and a wall or supported from below

●	PE
●	APC
●	APFC
●	FPEB
●	MI
●	DE
●	AD_E
●	CW
●	RD
●	ID
☆	CH
	TWR
●	XS
	XSG
☆	GD

❒ Change Height (CH) option ***not*** available
❄ Doors are square except full overlay arch door styles. Thermofoil door styles will always be square. Vanderbilt doors will have a solid, recessed flat panel
❍ Change Width (CW) option ***not*** available
✛ Glass door option ***not*** available

Note: *Peninsula wall cabinets **must** be installed against soffit, ceiling or supported by countertop.*

Peninsula Wall Double Door

Right shown

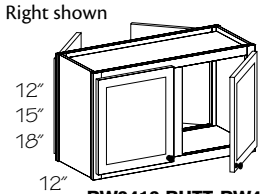

PW2412 BUTT-PW4218

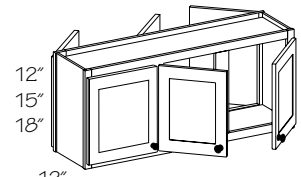

PW4812-PW4818

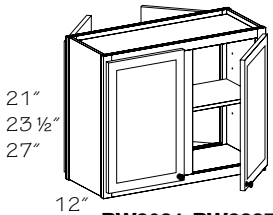

PW3021-PW3327

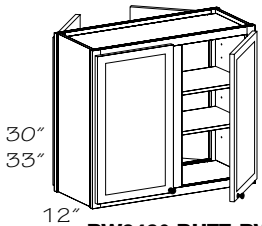

PW2430 BUTT-PW3633

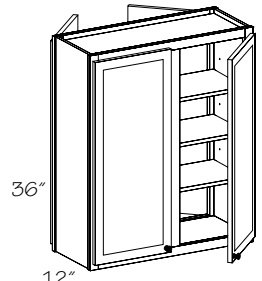

PW2436 BUTT-PW3636

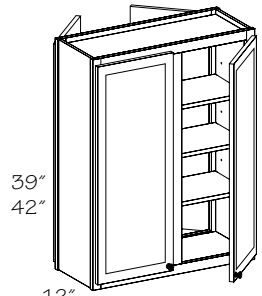

PW2439 BUTT-PW3642

No shelf
12″ High

❍❐ **PW2412 BUTT**
❐ **PW2712 (Butt)**
❐ **PW3012**
❐ **PW3312**
❐ **PW3612**
❐☆ **PW3912**
+❐☆ **PW4812**

15″ High

❍ **PW2415 BUTT**
PW2715 (Butt)
PW3015
PW3315
PW3615
☆ **PW3915**
+☆ **PW4815**

18″ High

❍ **PW2418 BUTT**
PW2718 (Butt)
PW3018
PW3318
PW3618
☆ **PW3918**
☆ **PW4218**
+☆ **PW4818**

One shelf
21″ High

PW3021
PW3321
PW3621

23 1/2″ High

❍ **PW2424 BUTT**
PW2724 (Butt)
PW3024
PW3324
PW3624
☆ **PW3924**
☆ **PW4224**
☆ **PW4524**
☆ **PW4824**

27″ High

❍❐ **PW3027**
❍❐ **PW3327**
❍❐ **PW3627**

Two shelves
30″ High

❍ **PW2430 BUTT**
PW2730 (Butt)
PW3030
PW3330
PW3630
☆ **PW3930**
☆ **PW4230**
☆ **PW4530**
☆ **PW4830**

33″ High

❍ **PW2433 BUTT**
PW2733 (Butt)
PW3033
PW3333
PW3633

Three shelves
36″ High

❍ **PW2436 BUTT**
PW2736 (Butt)
PW3036
PW3336
PW3636

39″ High

❍ **PW2439 BUTT**
PW2739 (Butt)
PW3039
PW3339
PW3639

42″ High

❍ **PW2442 BUTT**
PW2742 (Butt)
PW3042
PW3342
PW3642

❍ Change Width (CW) option ***not*** available
❐ Change Height (CH) option ***not*** available
☆ ***Not*** available in Increased Depth (ID)
\+ Glass door option ***not*** available

- Adjustable shelves
- Frame backs are ***not*** finished

Any wall cabinet over 24″ wide or 30″ high or higher with a depth greater than 12″ and/or with butt doors ***must*** be installed between two (2) cabinets, a cabinet and a wall or supported from below

●	PE
●	APC
●	APFC
●	FPEB
●	MI
●	DE
●	AD_E
☆	CW
●	RD
☆	ID
☆	CH
	TWR
●	XS
	XSG
☆	GD

Note: *Peninsula wall cabinets* ***must*** *be installed against soffit, ceiling or supported by countertop.*

Wall Corner Cabinets

PWBC	27	24
code	width	height

Material dimensions listed may vary slightly from actual dimensions of the product.

Specifications subject to change without notice.

Construction Options and Modifications

❖	Included as standard
●	Available with an upcharge
☆	Available with exceptions
(Blank)	***Not*** available

PE	Plywood Ends
APC	All Plywood Construction
APFC	All Plywood Furniture Construction
FPEB	Furniture Plywood Ends
MI	Matching Interior
DE	Integrated Decorative End
OE	Operational End
AD_E	Attached Decorative End
CW	Change Width
RD	Reduced Depth
ID	Increased Depth
CH	Change Height
TWR	Top Wide Rail
XS	Extended Stile
XSG	Integrated Extended Stile
GD	Glass Doors

Right blind shown
R or L indicates blind

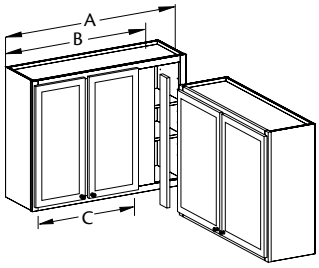

Wall Blind Corner Cabinet Information

- All WBC24 and PWBC24 doors are square except full overlay arched door styles. Evana Cathedral door styles will be square. Vanderbilt doors will have a solid, recessed flat panel
- All Wall Blind Corner cabinets ***must*** be pulled. Consult chart for pull dimensions and minimum wall space requirements
- R or L indicates blind
- Door hinged on same side as blind on single door cabinets
- ***Note:*** A 3″ Wall Filler (WF) is supplied and shipped separately with each Wall Blind Cabinet (WBC) ordered. A Wall Cabinet adjacent to WBC may be ordered with an extended stile in lieu of installing the supplied filler. Two 3″ Wall Fillers are supplied with each Peninsula Wall Blind Corner (PWBC) ordered. Overlay Panel for Wall Blind Corner Cabinets (OPWBC) is recommended for full overlay door styles; see Wall Accessories section in this book

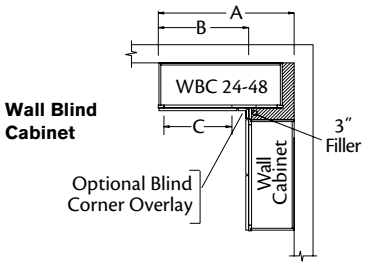

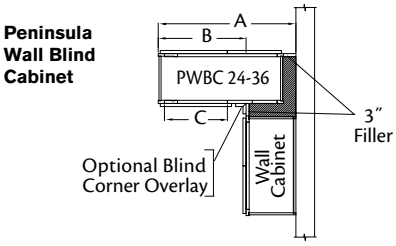

	1/2″ Overlay						Full Overlay					
	Wall Space "A"		Exposed Front "B"		Door Open	Cab.	Wall Space "A"		Exposed Front "B"		Door Open	Cab.
Cabinet	Min	Max	Min.	Max	"C"	Width	Min.	Max.	Min.	Max	"C"	Width
P/WBC24	21 ¼″	24 ¾″	9 ¼″	12 ¾″	6″	21″	22″	24 ¾″	10″	12 ¾″	6″	21″
P/WBC27	24 ¼″	27 ¾″	12 ¼″	15 ¾″	9″	24″	25″	27 ¾″	13″	16 ¾″	9″	24″
P/WBC30	27 ¼″	30 ¾″	15 ¼″	18 ¾″	12″	27″	28″	30 ¾″	16″	19 ¾″	12″	27″
P/WBC33	30 ¼″	33 ¾″	18 ¼″	21 ¾″	15″	30″	31″	33 ¾″	19″	21 ¾″	15″	30″
P/WBC36	33 ¼″	36 ¾″	21 ¼″	24 ¾″	18″	33″	34″	36 ¾″	22″	24 ¾″	18″	33″
WBC39	36 ¼″	39 ¾″	24 ¼″	27 ¾″	21″	36″	37″	39 ¾″	25″	27 ¾″	21″	36″
WBC42	39 ¼″	42 ¾″	27 ¼″	30 ¾″	24″	39″	40″	42 ¾″	28″	30 ¾″	24″	39″
WBC45	42 ¼″	45 ¾″	30 ¼″	33 ¾″	(2) 12″	42″	43″	45 ¾″	31″	33 ¾″	(2) 12″	42″
WBC48	45 ¼″	48 ¾″	33 ¼″	36 ¾″	(2)13 ½″	45″	46″	48 ¾″	34″	36 ¾″	(2)13 ½″	45″

Wall Blind Corner 23 1/2"—42" H

Left shown

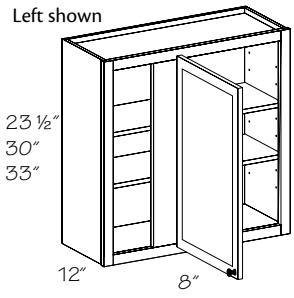

WBC2724-WBC3933

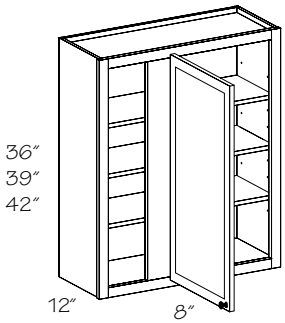

WBC2436-WBC3942

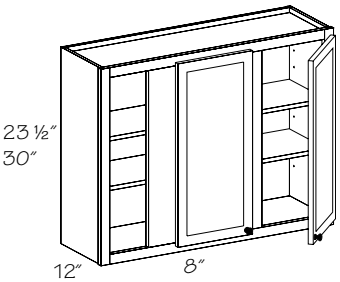

WBC4224-WBC4830

Specify R or L
One shelf
Single Door
23 1/2" High

WBC2724 R or L
WBC3024 R or L
WBC3324 R or L
WBC3624 R or L
WBC3924 R or L

Two shelves
30" High

❄+ **WBC2430 R or L**
WBC2730 R or L
WBC3030 R or L
WBC3330 R or L
WBC3630 R or L
WBC3930 R or L

33" High

❄+ **WBC2433 R or L**
WBC2733 R or L
WBC3033 R or L
WBC3333 R or L
WBC3633 R or L
WBC3933 R or L

Specify R or L
Three shelves
36" High

❄+ **WBC2436 R or L**
WBC2736 R or L
WBC3036 R or L
WBC3336 R or L
WBC3636 R or L

39" High

❄+◆ **WBC2439 R or L**
◆ **WBC2739 R or L**
◆ **WBC3039 R or L**
◆ **WBC3339 R or L**
◆ **WBC3639 R or L**
◆ **WBC3939 R or L**

42" High

❄+◆ **WBC2442 R or L**
◆ **WBC2742 R or L**
◆ **WBC3042 R or L**
◆ **WBC3342 R or L**
◆ **WBC3642 R or L**
◆ **WBC3942 R or L**

Double Door
One shelf
23 1/2" High

☆▲ **WBC4224 R or L**
☆ **WBC4524 R or L**
☆ **WBC4824 R or L**

Two shelves
30" High

☆▲ **WBC4230 R or L**
☆ **WBC4530 R or L**
☆ **WBC4830 R or L**

❄ Doors are square except full overlay arch door styles. Thermofoil door styles will always be square. Vanderbilt doors will have a solid, recessed flat panel
\+ Glass door option ***not*** available
◆ Top Wide Rail (TWR) option ***not*** available
☆ ***Not*** available in Increased Depth (ID)
▲ Two butt doors

- R or L indicates blind
- Adjustable shelves
- Overlay Panel for Wall Blind Corner Cabinet (OPWBC) is recommended for full overlay door styles and ***must*** be ordered separately; see Base Accessories Section of this book

Remember to order Flush Finished Blind (FFB) on a Wall Blind Corner (WBC) if the adjacent cabinet is shorter than the WBC.

Any wall cabinet over 24" wide or 30" high or higher with a depth greater than 12" and/or with butt doors ***must*** be installed between two (2) cabinets, a cabinet and a wall or supported from below

●	PE
●	APC
●	APFC
●	FPEB
●	MI
●	DE
	OE
●	AD_E
	CW
●	RD
☆	ID
●	CH
☆	TWR
●	XS
	XSG
☆	GD

Wall Blind Corner 48" and 54" H

Left shown

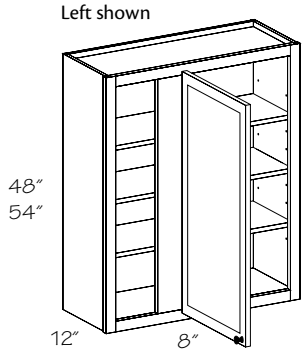

Specify R or L
Three shelves
48" High

❄+ **WBC2448 R or L**
WBC2748 R or L
WBC3048 R or L
WBC3348 R or L
WBC3648 R or L
☆ **WBC3948 R or L**

Specify R or L
Four shelves
54" High

❄+ **WBC2454 R or L**
WBC2754 R or L
WBC3054 R or L
WBC3354 R or L
WBC3654 R or L
☆ **WBC3954 R or L**

❄ Doors are square except full overlay arch door styles. Thermofoil door styles will always be square. Vanderbilt doors will have a solid, recessed flat panel
\+ Glass door option ***not*** available
☆ ***Not*** available in Increased Depth (ID)

- R or L indicates blind
- Adjustable shelves
- Shelves shipped separately
- Available in full overlay door styles only
- Overlay Panel for Wall Blind Corner Cabinet (OPWBC) is recommended for full overlay door styles and ***must*** be ordered separately; see Base Accessories Section of this book

☆ Maximum Increased Depth (ID) is 15"
☆ ***Not*** available with Camed glass door (GD) option
☆ ***Not*** available with Mullion glass doors (GD) option
☆ Modern Frosted (MRT) and Moire (MOI) Glass Inserts ***not*** available on 54" H cabinets

●	PE
●	APC
●	APFC
●	FPEB
●	MI
●	DE
	OE
●	AD_E
	CW
●	RD
☆	ID
●	CH
	TWR
●	XS
	XSG
☆	GD

Wall Blind Corner Stack

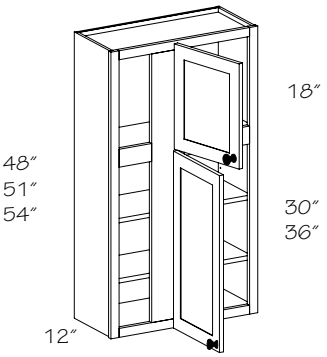

Specify R or L
Two shelves
48" High

❊+ **WBCST2448 R or L**
WBCST2748 R or L
WBCST3048 R or L
WBCST3348 R or L
WBCST3648 R or L
☆ **WBCST3948 R or L**

Specify R or L
Three shelves
54" High

❊+ **WBCST2454 R or L**
WBCST2754 R or L
WBCST3054 R or L
WBCST3354 R or L
WBCST3654 R or L
☆ **WBCST3954 R or L**

Two shelves
51" High

❊+ **WBCST2451 R or L**
WBCST2751 R or L
WBCST3051 R or L
WBCST3351 R or L
WBCST3651 R or L
☆ **WBCST3951 R or L**

❊ Doors are square except full overlay arch door styles. Thermofoil door styles will always be square. Vanderbilt doors will have a solid, recessed flat panel
\+ Glass door option ***not*** available
☆ ***Not*** available in Increased Depth (ID)

- R or L indicates blind
- Two vertical compartments with fixed rail and floor
- Bottom shelves are adjustable
- Shelves shipped separately
- Bottom door is always square
- Overlay Panel for Wall Blind Corner Cabinet (OPWBC) is recommended for full overlay door styles and ***must*** be ordered separately; see Base Accessories Section of this book
- ☆ Maximum Increased Depth (ID) is 15″

☆ Glass on top and bottom - select glass designs only

●	PE
●	APC
●	APFC
●	FPEB
●	MI
●	DE
	OE
●	AD_E
	CW
●	RD
☆	ID
	CH
	TWR
●	XS
	XSG
☆	GD

Flush Finished Blind

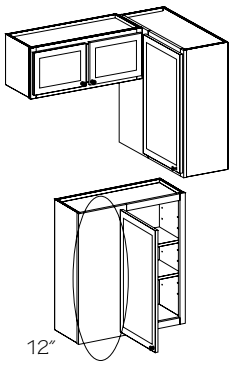

FFB

- Wall Blind Corner Cabinets (WBC) are available with Flush Finished Blind. Specify FFB
- Flush finished panel is solid wood
- Order Example: WBC 2430L-FFB

	PE
	APC
	APFC
	FPEB
	MI
	DE
	OE
	AD_E
	CW
	RD
	ID
	CH
	TWR
	XS
	XSG
	GD

Peninsula Wall Blind Corner

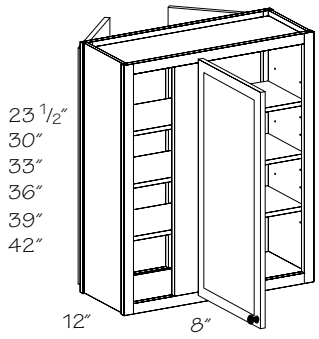

Specify R or L
One shelf
23 1/2" High

❊ **PWBC2724 R or L**
❊ **PWBC3024 R or L**
PWBC3324 R or L
PWBC3624 R or L

Two shelves
30" High

☆▲+ **PWBC2430 R or L**
❊ **PWBC2730 R or L**
❊ **PWBC3030 R or L**
PWBC3330 R or L
PWBC3630 R or L

33" High

☆▲+ **PWBC2433 R or L**
❊ **PWBC3033 R or L**
PWBC3633 R or L

Specify R or L
Three shelves
36" High

☆▲+ **PWBC2436 R or L**
❊ **PWBC3036 R or L**
PWBC3636 R or L

39" High

☆▲+ **PWBC2439 R or L**
PWBC3039 R or L
PWBC3639 R or L

42" High

☆▲+ **PWBC2442 R or L**
❊ **PWBC3042 R or L**
PWBC3642 R or L

❊ Butt doors on peninsula side
☆ Single door both sides
▲ Kitchen side door is square except full overlay arch door styles. Thermofoil door styles are always square. Vanderbilt doors will have a solid, recessed flat panel
\+ Glass door option ***not*** available

- R or L indicates blind
- Left shown
- Adjustable shelves
- Frame backs are ***not*** finished
- See Wall Blind Corner (WBC) cabinet chart for cabinet specifications
- ***Note:*** Two 3″ fillers included. Overlay Panel for Wall Blind Corner Cabinets (OPWBC) ***must*** be ordered separately; see Wall Accessories section of this book

We recommend using Under Cabinet Panels (UCP) on all wall cabinet runs. This will give the kitchen an elegant finished look. Unless ordered with a matching wood veneer interior option, the under side of wall cabinets are a natural birch material.

●	PE
●	APC
●	APFC
●	FPEB
●	MI
	DE
	OE
●	AD_E
	CW
●	RD
●	ID
●	CH
	TWR
●	XS
	XSG
☆	GD

135° Wall Inside Angle Corner Cabinet

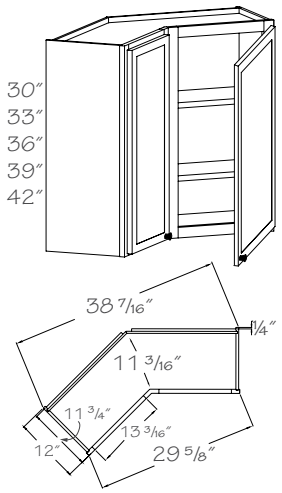

Two shelves

WIAC2130

WIAC2133

Three shelves

WIAC2136

WIAC2139

WIAC2142

- Adjustable shelves
- Backs of cabinets are slightly recessed to allow for wall imperfections
- Shimming is required
- ***Must*** allow 21″ of wall space

●	PE
●	APC
●	APFC
●	FPEB
●	MI
	DE
	OE
	AD_E
	CW
	RD
	ID
●	CH
●	TWR
●	XS
	XSG
●	GD

135° Wall Outside Angle Corner Cabinet

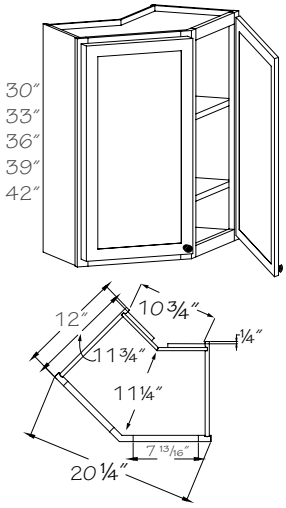

Two shelves

WOAC630

WOAC633

Three shelves

WOAC636

WOAC639

WOAC642

- Adjustable shelves
- Backs of cabinets are slightly recessed to allow for wall imperfections
- Shimming is required
- ***Must*** allow 6″ of wall space

●	PE
●	APC
●	APFC
●	FPEB
●	MI
	DE
	OE
	AD_E
	CW
	RD
	ID
●	CH
●	TWR
●	XS
	XSG
	GD

Wall Angle 12″ Deep

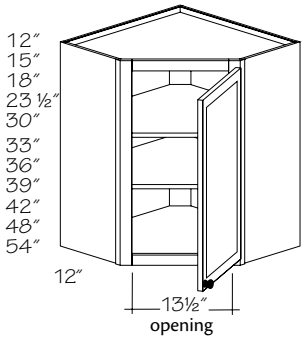

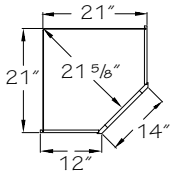

WA21_

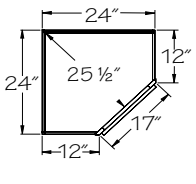

WA24_

Specify R or L
21″ Wide
No Shelf

❒ **WA2112 R or L**
WA2115 R or L
WA2118 R or L
❊ **WA2124 R or L**

Two Shelves

WA2130 R or L
WA2133 R or L

Three Shelves

WA2136 R or L
WA2139 R or L
WA2142 R or L
▲☆**WA2148 R or L**

Four Shelves

▲☆**WA2154 R or L**

Specify R or L
24″ Wide
No shelf

❒ **WA2412 R or L**
WA2415 R or L
WA2418 R or L

One shelf

❊ **WA2424 R or L**

Two shelves

WA2430 R or L
WA2433 R or L

Three shelves

WA2436 R or L
WA2439 R or L
WA2442 R or L
▲☆**WA2448 R or L**

Four shelves

▲☆**WA2454 R or L**

- Adjustable shelves
- ☆ Wall Top Wide Rail (WTWR) available on 12″–36″ high cabinets only
- ☆ Modern Frosted (MRT) and Moire (MOI) Glass Inserts ***not*** available on 54″ H cabinets
- ***Note:*** Full overlay door styles use a 1/2″ overlay hinge

Do ***not*** design a corner cabinet adjacent to an object deeper than the end panel. The door of the corner cabinet may ***not*** function properly.

●	PE
●	APC
●	APFC
●	FPEB
●	MI
●	DE
●	OE
●	AD_E
	CW
	RD
	ID
☆	CH
☆	TWR
	XS
	XSG
☆	GD

❒ Change Height (CH) option ***not*** available
❊ Shelf is factory installed and ***not*** removable
▲ Available in full overlay door styles only
☆ ***Not*** available with Mullion glass doors (GD) option

Grey color coding indicates new product, size or code.

Wall Angle 15″ Deep

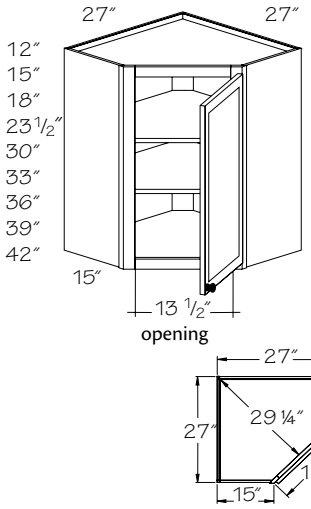

Specify R or L
No shelf

❒ **WA2712 R or L**
WA2715 R or L
WA2718 R or L

One shelf

❄ **WA2724 R or L**

Two shelves

WA2730 R or L
WA2733 R or L

Specify R or L
Three shelves

WA2736 R or L
WA2739 R or L
WA2742 R or L

❒ Change Height (CH) option ***not*** available
❄ Shelf is factory installed and ***not*** removable

- Adjustable shelves
- Furniture Plywood Ends (FPEB) standard; recommended Matching Interior option is MIFP
- Flush Finished Ends standard

☆ APFC standard when APC option is selected

- ***Note:*** Full overlay door styles use a 1/2″ overlay hinge



Full overlay doors on cabinets with an angled front are intentionally narrower to allow proper clearance of adjacent cabinets.

	PE
●	APC
☆	APFC
❖	FPEB
●	MI
	DE
●	OE
●	AD_E
	CW
	RD
	ID
☆	CH
●	TWR
	XS
	XSG
●	GD

Wall Angle Chrome Lazy Susan

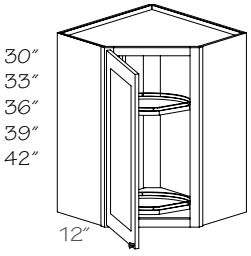

Specify R or L
Two shelves

WA2430 R or L•CLS
WA2433 R or L•CLS

Three shelves

WA2436 R or L•CLS
WA2439 R or L•CLS
WA2442 R or L•CLS

- 19 1/2″ diameter rotating shelves
- Maximum weight per shelf is 18 lbs.
- Shelves rotate together
- ***Note:*** Full overlay door styles use a 1/2″ overlay hinge

●	PE
●	APC
●	APFC
●	FPEB
●	MI
●	DE
	OE
●	AD_E
	CW
	RD
	ID
	CH
	TWR
	XS
	XSG
●	GD

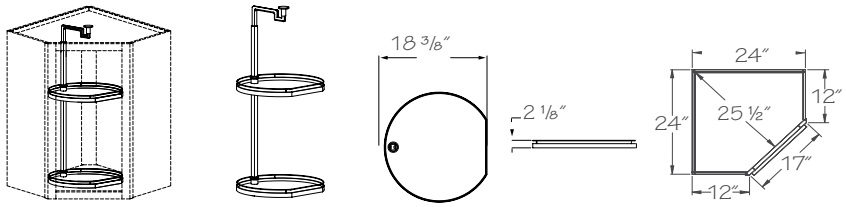

Wall Angle Wood Lazy Susan

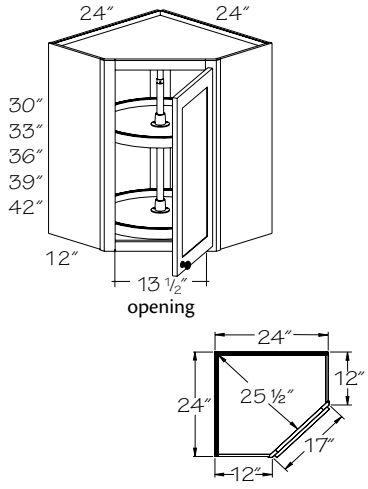

Specify R or L
Two shelves

WA2430 R or L•WLS
WA2433 R or L•WLS

Three shelves

WA2436 R or L•WLS
WA2439 R or L•WLS
WA2442 R or L•WLS

- 19 1/2″ diameter rotating shelves
- Rotating shelves have plywood floor and solid wood trim
- ***Note:*** Full overlay door styles use a 1/2″ overlay hinge

●	PE
●	APC
●	APFC
●	FPEB
●	MI
●	DE
	OE
●	AD_E
	CW
	RD
	ID
	CH
	TWR
	XS
	XSG
●	GD

Wall Angle Stack

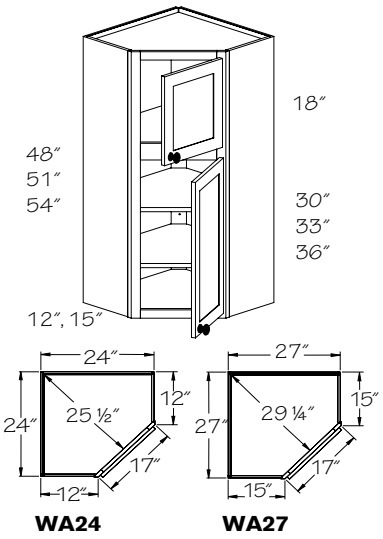

Specify R or L
Two shelves
48" High

WAST2448 R or L

☆ **WAST2748 R or L**

Two shelves
51" High

WAST2451 R or L

☆ **WAST2751 R or L**

Three shelves
54" High

WAST2454 R or L

☆ **WAST2754 R or L**

☆ Furniture Plywood Ends (FPEB) standard; recommended Matching Interior option is MIFP

- Two vertical compartments with fixed rail and floor
- Bottom shelves are adjustable
- Shelves shipped separately
- Bottom door is always square

☆ Glass on top and bottom - select glass designs only

- ***Note:*** Full overlay door styles use a 1/2" overlay hinge

☆	PE
●	APC
●	APFC
☆	FPEB
●	MI
	DE
●	OE
●	AD_E
	CW
	RD
	ID
	CH
	TWR
	XS
	XSG
☆	GD

Wall Angle Chrome Lazy Susan Stack

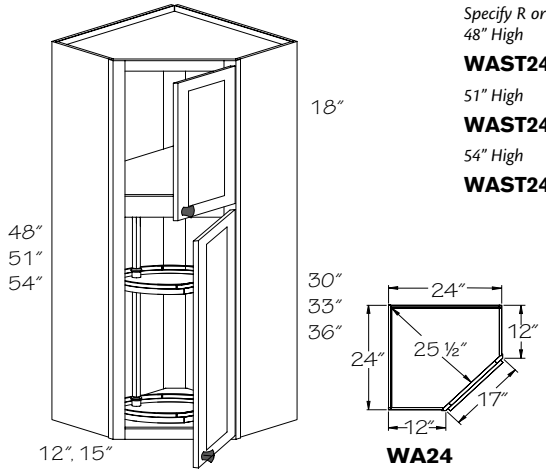

Specify R or L
48" High

WAST2448 R or L•CLS

51" High

WAST2451 R or L•CLS

54" High

WAST2454 R or L•CLS

- 19 11/16" diameter rotating shelves
- Maximum weight per shelf is 18 lbs.
- Shelves rotate together
- Two vertical compartments with fixed rail and floor
- Bottom door is always square

☆ Glass on top and bottom - select glass designs only

- ***Note:*** Full overlay door styles use a 1/2" overlay hinge

●	PE
●	APC
●	APFC
●	FPEB
●	MI
	DE
	OE
●	AD_E
	CW
	RD
	ID
	CH
	TWR
	XS
	XSG
☆	GD

Wall Angle Wood Lazy Susan Stack

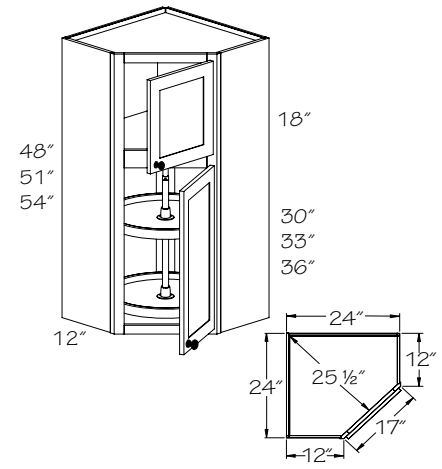

Specify R or L
48" High

WAST2448 R or L•WLS

51" High

WAST2451 R or L•WLS

54" High

WAST2454 R or L•WLS

- 19 1/2" diameter rotating shelves
- Rotating shelves have plywood floor and solid wood trim
- Two vertical compartments with fixed rail and floor
- Bottom door is always square

☆ Glass on top and bottom - select glass designs only

- ***Note:*** Full overlay door styles use a 1/2" overlay hinge

●	PE
●	APC
●	APFC
●	FPEB
●	MI
	DE
	OE
●	AD_E
	CW
	RD
	ID
	CH
	TWR
	XS
	XSG
☆	GD

Wall Angle Appliance Garage

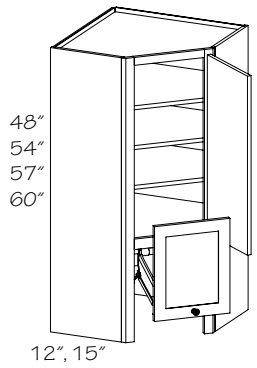

Specify R or L
Two adjustable shelves
48″ High
❒ **WAAG2448 R or L**
☆❒ **WAAG2748 R or L**

Specify R or L
Three adjustable shelves
54″ High
WAAG2454 R or L
☆ **WAAG2754 R or L**
57″ High
✣ **WAAG2457 R or L**
☆✣ **WAAG2757 R or L**
60″ High
✣ **WAAG2460 R or L**
☆✣ **WAAG2760 R or L**

❒ Change Height (CH) option ***not*** available
☆ Furniture plywood ends (FPEB) standard
✣ Attached Decorative Ends (AD_E) option ***not*** available

- Clearance from countertop to bottom of door is 20 1/32″
- Adjustable Soft-Close lift mechanism standard
- Shelves shipped separately
- Bottom door is always square
- Void All Door and Drawer Front option (VDA) is ***not*** available
- ☆ Glass doors available for top doors only
- ***Note:*** Full overlay door styles use a 1/2″ overlay hinge

☆	PE
●	APC
●	APFC
☆	FPEB
●	MI
	DE
	OE
☆	AD_E
	CW
	RD
	ID
☆	CH
	TWR
	XS
	XSG
☆	GD

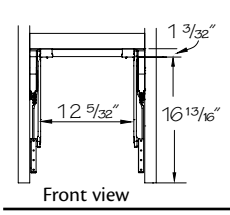

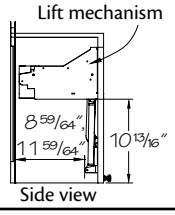

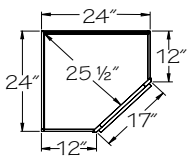

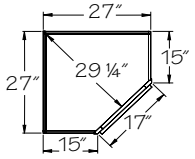

Wall Angle Appliance Garage Chrome Lazy Susan

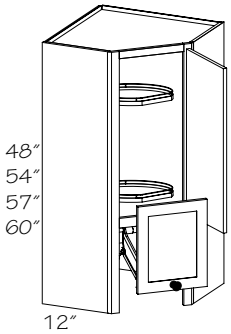

Specify R or L
Two shelves
48″ High
WAAG2448 R or L•CLS
Three shelves
54″ High
WAAG2454 R or L•CLS
57″ High
✣ **WAAG2457 R or L•CLS**
60″ High
✣ **WAAG2460 R or L•CLS**

✣ Attached Decorative Ends (AD_E) option ***not*** available

- 19 11/16″ diameter rotating shelves
- Maximum weight per shelf is 18 lbs.
- Shelves rotate together
- Clearance from countertop to bottom of door is 20 1/32″
- Adjustable Soft-Close lift mechanism standard
- Bottom door is always square
- Void All Door and Drawer Front option (VDA) is ***not*** available
- ☆ Glass doors available for top doors only
- ***Note:*** Full overlay door styles use a 1/2″ overlay hinge

●	PE
●	APC
●	APFC
●	FPEB
●	MI
	DE
	OE
☆	AD_E
	CW
	RD
	ID
	CH
	TWR
	XS
	XSG
☆	GD

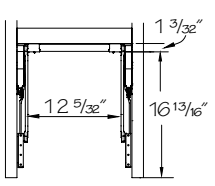

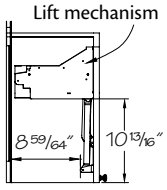

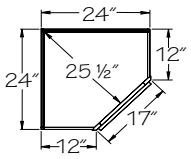

Wall Angle Appliance Garage Wood Lazy Susan

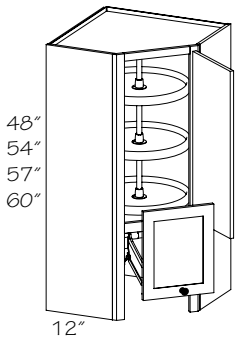

Specify R or L
Two shelves
48″ High
WAAG2448 R or L•WLS
Three shelves
54″ High
WAAG2454 R or L•WLS
57″ High
✣ **WAAG2457 R or L•WLS**
60″ High
✣ **WAAG2460 R or L•WLS**

✣ Attached Decorative Ends (AD_E) option ***not*** available

- 19 1/2″ diameter rotating shelves
- Adjustable Soft-Close lift mechanism standard
- Rotating shelves have plywood floor and solid wood trim
- Clearance from countertop to bottom of door is 20 1/32″
- Bottom door is always square
- Void All Door and Drawer Front option (VDA) is ***not*** available
- ☆ Glass doors available for top doors only
- ***Note:*** Full overlay door styles use a 1/2″ overlay hinge

●	PE
●	APC
●	APFC
●	FPEB
●	MI
	DE
	OE
☆	AD_E
	CW
	RD
	ID
	CH
	TWR
	XS
	XSG
☆	GD

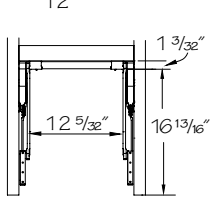

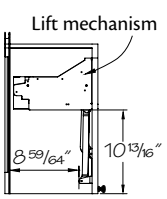

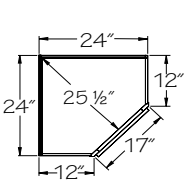

Wall Easy Reach

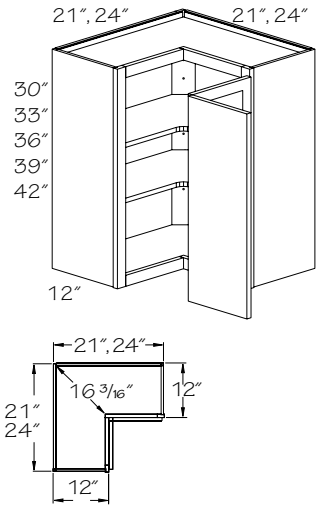

Specify R or L
Two shelves
30″ High

❊†■❍ **WEZR2130 R or L**
WEZR2430 R or L

33″ High

❊†■❍ **WEZR2133 R or L**
WEZR2433 R or L

Specify R or L
Three shelves
36″ High

❊†■❍ **WEZR2136 R or L**
WEZR2436 R or L

39″ High

❊†■❍ **WEZR2139 R or L**
WEZR2439 R or L

42″ High

❊†■❍ **WEZR2142 R or L**
WEZR2442 R or L

❊ Doors are square except full overlay arch door styles. Thermofoil door styles will always be square. Vanderbilt doors will have a solid, recessed flat panel. Courtney doors will have a veneer, recessed flat panel
† Glass door option ***not*** available
■ Wood-Grain Foil door styles will be supplied as vertical grain slabs
❍ Change Width (CW) option ***not*** available

- Right shown
- Adjustable shelves
- Frame opening from left to right edge:
  10 1/2″ for WEZR21
  14 3/4″ for WEZR24
- Face frame is scooped for hinge installation on full overlay door styles
- Hinged door opens to 170°
- ☆ ***Not*** available with Aluminum Frame Glass doors
- Both legs ***must*** be modified equally for Change Width (CW), ***not*** available with Glass Doors (GD)
- ***Note:*** Does ***not*** include Soft-Close feature

Do ***not*** design a corner cabinet adjacent to an object deeper than the end panel. The door of the corner cabinet may ***not*** function properly.

●	PE
●	APC
●	APFC
●	FPEB
●	MI
●	DE
●	OE
●	AD_E
☆	CW
	RD
	ID
●	CH
	TWR
●	XS
	XSG
☆	GD

Asymmetrical Wall Easy Reach

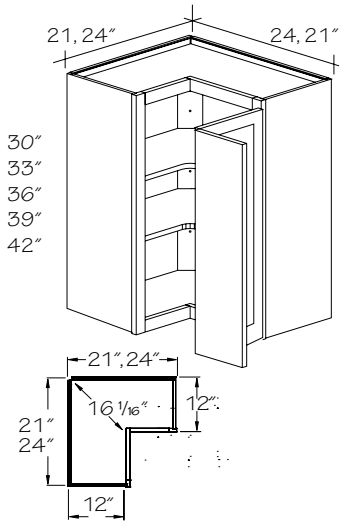

Specify R or L
Two shelves
30″ High

WEZR212430 R or L
WEZR242130 R or L

33″ High

WEZR212433 R or L
WEZR242133 R or L

Three shelves
36″ High

WEZR212436 R or L
WEZR242136 R or L

39″ High

WEZR212439 R or L
WEZR242139 R or L

42″ High

WEZR212442 R or L
WEZR242142 R or L

- Adjustable shelves
- Frame opening from left to right edge is 12 7/8″
- Face frame is scooped for hinge installation on full overlay door styles
- Hinged door opens to 170°
- Doors are square except full overlay arch door styles. Thermofoil door styles will always be square. Vanderbilt doors will have a solid, recessed flat panel. Courtney doors will have a veneer, recessed flat panel
- Wood-Grain Foil door styles will be supplied as vertical grain slabs
- ***Note:*** Does ***not*** include Soft-Close feature

Remember, all 9″ wide doors in 1/2″ overlay will be square even for a roman door style. If a 9″ cabinet is required, one suggestion is to void the door and order the cabinet with matching interior and use it as a decorative open cabinet.

●	PE
●	APC
●	APFC
●	FPEB
●	MI
●	DE
●	OE
●	AD_E
	CW
	RD
	ID
●	CH
	TWR
●	XS
	XSG
	GD

Peninsula Wall Corner Cabinets

PWA	24	30	R	L
code	width	height	kitchen side hinging	rear door placement (looking at kitchen side)

Construction Options and Modifications

❖	Included as standard
●	Available with an upcharge
☆	Available with exceptions
(Blank)	***Not*** available

PE	Plywood Ends
APC	All Plywood Construction
APFC	All Plywood Furniture Construction
FPEB	Furniture Plywood Ends
MI	Matching Interior
AD_E	Attached Decorative End
CW	Change Width
RD	Reduced Depth
ID	Increased Depth
CH	Change Height
XS	Extended Stile
GD	Glass Doors

Material dimensions listed may vary slightly from actual dimensions of the product.

Specifications subject to change without notice.

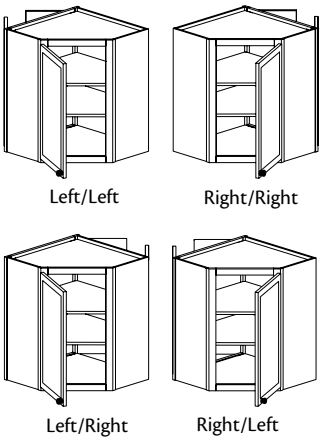

Peninsula Wall Angle Example

- Specify R or L rear door position
- The second R or L designates rear frame position looking at kitchen side

PE
APC
APFC
FPEB
MI
AD_E
CW
RD
ID
CH
XS
GD

Peninsula Wall Angle

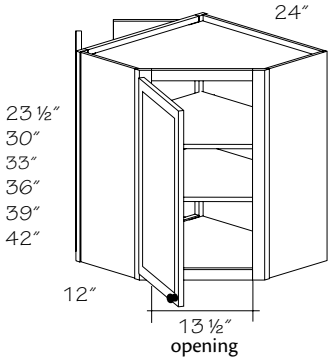

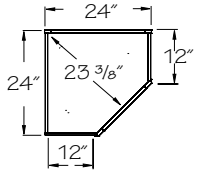

Specify R or L Kitchen Side Hinging
Specify R or L Rear Door Placement
One shelf
23 1/2" High

PWA2424 RR or RL
PWA2424 LR or LL

Two shelves
30" High

PWA2430 RR or RL
PWA2430 LR or LL

33" High

PWA2433 RR or RL
PWA2433 LR or LL

Three shelves
36" High

PWA2436 RR or RL
PWA2436 LR or LL

39" High

PWA2439 RR or RL
PWA2439 LR or LL

42" High

PWA2442 RR or RL
PWA2442 LR or LL

- Left/Left shown
- Adjustable shelves
- Butt doors on peninsula side
- Frame backs are ***not*** finished
- See example for hinging and rear door position

☆ Glass inserts ***not*** available on ends

- ***Note:*** Full overlay door styles: Kitchen side (front) doors use a 1/2" overlay hinge. Peninsula side (back) doors use a full overlay hinge

● PE
● APC
● APFC
● FPEB
● MI
● AD_E
CW
RD
ID
● CH
XS
☆ GD

Peninsula Wall Angle Wood Lazy Susan

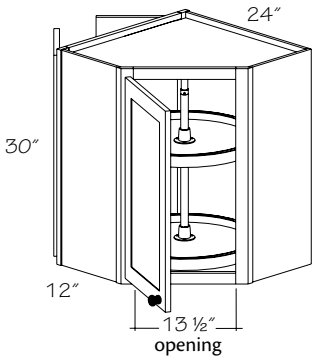

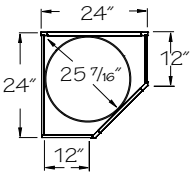

Specify R or L Kitchen Side Hinging
Specify R or L Rear Frame Position
Two Shelves

PWA2430 RR or RL▪WLS
PWA2430 LR or LL▪WLS

- Left/Left shown
- 19 1/2" diameter rotating shelves
- Rotating shelves have plywood floor and solid wood trim
- Butt doors on peninsula side
- Frame backs are ***not*** finished
- See example for hinging and rear door position
- ☆ Glass inserts ***not*** available on ends
- ***Note:*** Full overlay door styles: Kitchen side (front) doors use a 1/2" overlay hinge. Peninsula side (back) doors use a full overlay hinge

●	PE
●	APC
●	APFC
●	FPEB
●	MI
●	AD_E
	CW
	RD
	ID
	CH
	XS
☆	GD

Peninsula Wall Easy Reach

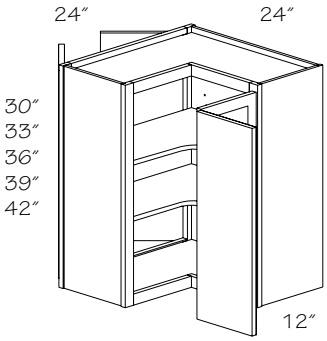

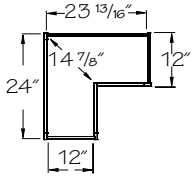

Specify R or L Kitchen Side Hinging
Specify R or L Rear Frame Placement
Two shelves
30" High

PWEZR2430 RR or RL
PWEZR2430 LR or LL

33" High

PWEZR2433 RR or RL
PWEZR2433 LR or LL

Three shelves
36" High

PWEZR2436 RR or RL
PWEZR2436 LR or LL

39" High

PWEZR2439 RR or RL
PWEZR2439 LR or LL

42" High

PWEZR2442 RR or RL
PWEZR2442 LR or LL

- Right/Left shown
- Adjustable shelves
- Butt doors on peninsula side
- Hinged door opens to 170°
- See example for hinging and rear door position
- Frame backs are ***not*** finished
- ☆ ***Not*** available with Aluminum Frame glass doors on kitchen side
- ☆ Glass inserts ***not*** available on ends
- ***Note:*** Kitchen side does ***not*** include Soft-Close feature. Peninsula side doors feature Soft-Close hinge

●	PE
●	APC
●	APFC
●	FPEB
●	MI
●	AD_E
	CW
	RD
	ID
●	CH
●	XS
☆	GD

Wall End Run Cabinets

WEC	12	30
code	width	height

Material dimensions listed may vary slightly from actual dimensions of the product.

Specifications subject to change without notice.

Construction Options and Modifications

❖ Included as standard
● Available with an upcharge
☆ Available with exceptions
(Blank) ***Not*** available

PE	Plywood Ends
APC	All Plywood Construction
APFC	All Plywood Furniture Construction
FPEB	Furniture Plywood Ends
MI	Matching Interior
DE	Integrated Decorative End
AD_E	Attached Decorative End
CW	Change Width
RD	Reduced Depth
ID	Increased Depth
CH	Change Height
XS	Extended Stile
GD	Glass Doors

Wall Corner Angle

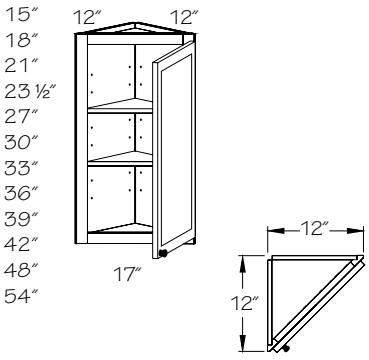

Specify R or L
No shelf

WCA1215 R or L
WCA1218 R or L

One shelf

WCA1221 R or L
WCA1224 R or L
❒ **WCA1227 R or L**

Two shelves

WCA1230 R or L
WCA1233 R or L

Three shelves

WCA1236 R or L
WCA1239 R or L
WCA1242 R or L

Three shelves, shipped separately

☆▲■ **WCA1248 R or L**

Four shelves shipped separately

†☆■▲**WCA1254 R or L**

- ❒ Change Height (CH) option ***not*** available
- ☆ ***Not*** available with Mullion glass doors (GD) option
- ▲ Available in full overlay door styles only
- ■ ***Not*** available with Prepared for Glass (GD) option
- † Modern Frosted (MRT) and Moire (MOI) Glass Inserts ***not*** available on 54″ H cabinets

- Adjustable shelves
- Back Options (BEB and VGRB) ***not*** available
- Contrasting Back Options (CBEB, CPLB, CVGR) ***not*** available

●	PE
●	APC
	APFC
	FPEB
●	MI
	DE
	AD_E
	CW
	RD
	ID
☆	CH
	XS
☆	GD

Wall Corner Angle Stack

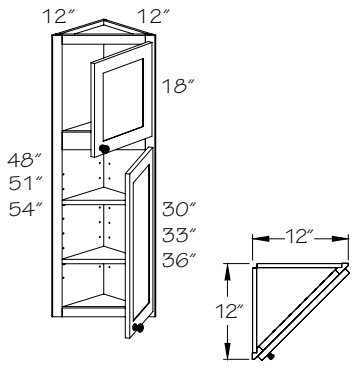

Specify R or L
Two shelves

WCAST1248 R or L
WCAST1251 R or L

Three shelves

WCAST1254 R or L

- Two vertical compartments with fixed rail and floor
- Bottom shelves are adjustable
- Shelves shipped separately
- Bottom door is always square
- Back Options (BEB and VGRB) ***not*** available
- Contrasting Back Options (CBEB, CPLB, CVGR) ***not*** available

☆ Glass on top and bottom - select glass designs only

●	PE
●	APC
	APFC
	FPEB
●	MI
	DE
	AD_E
	CW
	RD
	ID
	CH
	XS
☆	GD

Wall End Corner

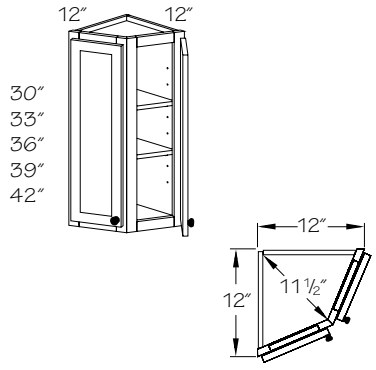

Two shelves

WEC1230

WEC1233

Three shelves

WEC1236

WEC1239

WEC1242

- Adjustable shelves
- Back Options (BEB and VGRB) ***not*** available
- Contrasting Back Options (CBEB, CPLB, CVGR) ***not*** available
- Doors are square except full overlay arch door styles. Thermofoil door styles will always be square. Vanderbilt doors will have a solid, recessed flat panel

●	PE
●	APC
	APFC
	FPEB
●	MI
	DE
	AD_E
	CW
	RD
	ID
●	CH
	XS
	GD

Wall End Angle

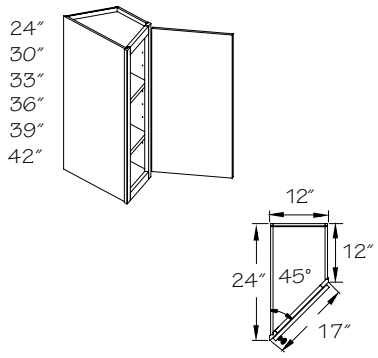

Specify R or L
One shelf

WEA1224 R or L

Two shelves

WEA1230 R or L

WEA1233 R or L

Three shelves

WEA1236 R or L

WEA1239 R or L

WEA1242 R or L

- Designed to be a transition cabinet between a 12″ deep wall cabinet and a 24″ deep tall or Wall Refrigerator cabinet
- Right shown
- Adjustable shelves
- ☆ Minimum Reduced Depth (RD) is 18″
- ☆ Integrated Decorative End (DE) available on 12″ deep side only
- ***Note:*** Full overlay door styles use a 1/2″ overlay hinge

●	PE
●	APC
●	APFC
●	FPEB
●	MI
☆	DE
●	AD_E
	CW
☆	RD
	ID
●	CH
	XS
●	GD

Wall Message Center

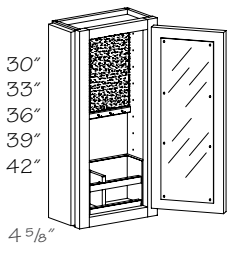

Specify R or L

MCW1230 R or L

MCW1233 R or L

MCW1236 R or L

MCW1239 R or L

MCW1242 R or L

- Includes: Dry erase board, key hooks, cork board and Utensil organizer
- Available on all door styles
- For use at the end of a cabinet run
- Filler Overlay (FO) supplied, ships separately, field install

	PE
	APC
❖	APFC
	FPEB
	MI
	DE
	AD_E
	CW
	RD
	ID
	CH
	XS
	GD

Solid Wood Wall End Open Shelf

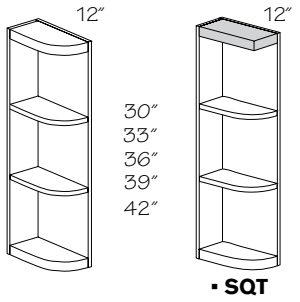

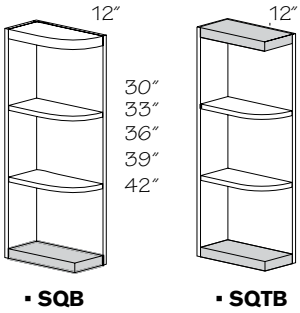

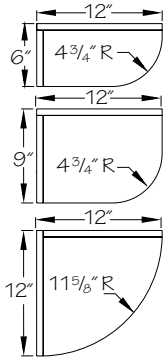

Specify R or L
(3) 8 13/16″ sections
30″ High

SWEOS630 R or L
SWEOS630 R or L▪SQT
SWEOS630 R or L▪SQB
SWEOS630 R or L▪SQTB
SWEOS930 R or L
SWEOS930 R or L▪SQT
SWEOS930 R or L▪SQB
SWEOS930 R or L▪SQTB
SWEOS1230 R or L
SWEOS1230 R or L▪SQT
SWEOS1230 R or L▪SQB
SWEOS1230 R or L▪SQTB

(3) 9 13/16″ sections
33″ High

SWEOS633 R or L
SWEOS633 R or L▪SQT
SWEOS633 R or L▪SQB
SWEOS633 R or L▪SQTB
SWEOS933 R or L
SWEOS933 R or L▪SQT
SWEOS933 R or L▪SQB
SWEOS933 R or L▪SQTB
SWEOS1233 R or L
SWEOS1233 R or L▪SQT
SWEOS1233 R or L▪SQB
SWEOS1233 R or L▪SQTB

(4) 7 15/16″ sections
36″ High

SWEOS636 R or L
SWEOS636 R or L▪SQT
SWEOS636 R or L▪SQB
SWEOS636 R or L▪SQTB
SWEOS936 R or L
SWEOS936 R or L▪SQT
SWEOS936 R or L▪SQB
SWEOS936 R or L▪SQTB
SWEOS1236 R or L
SWEOS1236 R or L▪SQT
SWEOS1236 R or L▪SQB
SWEOS1236 R or L▪SQTB

Specify R or L
(4) 8 11/16″ sections
39″ High

SWEOS639 R or L
SWEOS639 R or L▪SQT
SWEOS639 R or L▪SQB
SWEOS639 R or L▪SQTB
SWEOS939 R or L
SWEOS939 R or L▪SQT
SWEOS939 R or L▪SQB
SWEOS939 R or L▪SQTB
SWEOS1239 R or L
SWEOS1239 R or L▪SQT
SWEOS1239 R or L▪SQB
SWEOS1239 R or L▪SQTB

(4) 9 7/16″ sections
42″ High

SWEOS642 R or L
SWEOS642 R or L▪SQT
SWEOS642 R or L▪SQB
SWEOS642 R or L▪SQTB
SWEOS942 R or L
SWEOS942 R or L▪SQT
SWEOS942 R or L▪SQB
SWEOS942 R or L▪SQTB
SWEOS1242 R or L
SWEOS1242 R or L▪SQT
SWEOS1242 R or L▪SQB
SWEOS1242 R or L▪SQTB

- 5/8″ wood veneer on sides and back
- 1 3/16″ thick top and bottom shelves
- Left shown
- Painted hardwood supplied for EverCore™ and Thermofoil
- Plain sawn material supplied for Barnet Crafted door styles
- Solid wood construction on shelves only
- Back Options (BEB and VGRB) ***not*** available
- Contrasting Back Options (CBEB, CPLB, CVGR) ***not*** available
- ***Not*** available in High-Gloss Foil or Wood-Grain Foil door styles
- ***Not*** available in Morristown; Melrose and Putnam Oak supplied quartersawn

☆ Shelves remain solid when APC option is chosen; sides and back will be 11/16″ matching wood veneer plywood

☆ Reduced Depth (RD) available in 3″ increments to a minimum of 6″

	PE
☆	APC
	APFC
	FPEB
❖	MI
	DE
	AD_E
	CW
☆	RD
	ID
	CH
	XS
	GD

Wall Open Cabinets

WCDA	18	36
code	width	height

Material dimensions listed may vary slightly from actual dimensions of the product.

Specifications subject to change without notice.

Construction Options and Modifications

❖ Included as standard
● Available with an upcharge
☆ Available with exceptions
(Blank) ***Not*** available

PE	Plywood Ends
APC	All Plywood Construction
APFC	All Plywood Furniture Construction
FPEB	Furniture Plywood Ends
MI	Matching Interior
DE	Integrated Decorative End
AD_E	Attached Decorative End
CW	Change Width
RD	Reduced Depth
ID	Increased Depth
CH	Change Height
TWR	Top Wide Rail
XS	Extended Stile
XSG	Integrated Extended Stile
GD	Glass Doors

Wall Open Cabinet

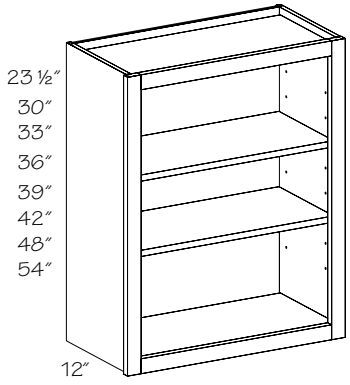

One shelf
23 1/2″ High
WOC2424
WOC3024

Two shelves
30″ High
WOC1230
WOC1530
WOC1830
WOC2130
WOC2430
WOC2730
WOC3030
WOC3330
WOC3630

33″ High
WOC1233
WOC1533
WOC1833
WOC2133
WOC2433
WOC2733
WOC3033
WOC3333
WOC3633

Three shelves
36″ High
WOC1236
WOC1536
WOC1836
WOC2136
WOC2436
WOC2736
WOC3036
WOC3336
WOC3636

39″ High
WOC1239
WOC1539
WOC1839
WOC2139
WOC2439
WOC2739
WOC3039
WOC3339
WOC3639

42″ High
WOC1242
WOC1542
WOC1842
WOC2142
WOC2442
WOC2742
WOC3042
WOC3342
WOC3642

Three shelves, shipped separately
48″ High
WOC1248
WOC1548
WOC1848
WOC2148
WOC2448
WOC2748
WOC3048
WOC3348
WOC3648

Four shelves, shipped separately
54″ High
WOC1254
WOC1554
WOC1854
WOC2154
WOC2454
WOC2754
WOC3054
WOC3354
WOC3654

- No door
- Adjustable shelves
- The following valance options are available:
- VA (4 1/2″ Arched Fret Valance)
- VCB (5 1/2″ Corbel Valance)
- VCV (5 1/2″ Cove Valance)
- VCR (5 1/2″ Crown Valance)
- VF (3 1/2″ Furniture Valance)
- VSH (5 1/2″ Shaker Arched Valance)
- VTWR (6″ Straight Rail Valance)
- VVIC (5 1/2″ Victorian Valance)
- Valance options available in cabinets 15″ and wider
- VA ***not*** available in 15″ wide cabinets
- Painted hardwood supplied for EverCore™
- Valance options are plain sawn wood in quartersawn door styles

☆ Wall Top Wide Rail (WTWR) available on 12″–36″ high cabinets only

☆ Maximum Increased Depth (ID) is 15″ for cabinets 48″ and 54″ high

- Order Example: WOC2430-VCR; see Construction Option section of this book for illustrations

●	PE
●	APC
●	APFC
●	FPEB
❖	MI
●	DE
●	AD_E
●	CW
●	RD
☆	ID
●	CH
☆	TWR
●	XS
●	XSG
	GD

Wall China Display

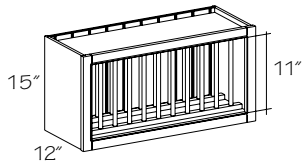

WCD2415 7 plates
WCD3015 10 plates
WCD3615 12 plates

- 10 7/8″ clearance for plates
- Spindle height 11 1/2″
- Spindles are shipped separately
- Wood veneer Beaded Back
- Painted hardwood supplied for EverCore™
- ***Not*** available in Morristown; Melrose and Putnam supplied plain sawn

☆ Minimum Reduced Depth (RD) is 9″

●	PE
●	APC
●	APFC
●	FPEB
❖	MI
●	DE
	AD_E
	CW
☆	RD
	ID
	CH
	TWR
	XS
	XSG
	GD

Lattice Wall Cabinet

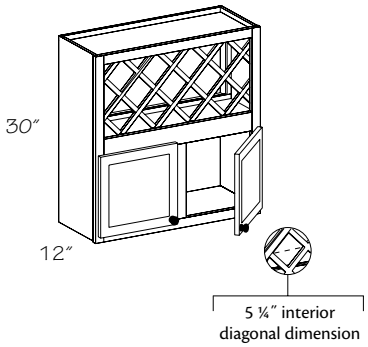

LW3030 11 bottles
LW3630 13 bottles

- 3 3/4″ diameter bottle
- Lattices are ***not*** removable
- Lattice finished one side only
- No shelf

●	PE
●	APC
●	APFC
●	FPEB
❖	MI
	DE
●	AD_E
	CW
	RD
	ID
	CH
	TWR
●	XS
	XSG
●	GD

Lattice Wall

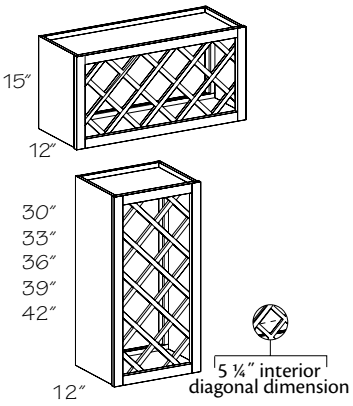

Horizontal
15″ High
LW2415 7 bottles
LW3015 11 bottles
LW3315 11 bottles
LW3615 13 bottles

Vertical
30″ High
LW1530 11 bottles
LW1830 11 bottles
LW2430 17 bottles
33″ High
LW1533 11 bottles
LW1833 11 bottles
LW2433 17 bottles
36″ High
LW1536 13 bottles
LW1836 13 bottles
LW2436 23 bottles
39″ High
LW1539 17 bottles
LW1839 17 bottles
LW2439 27 bottles
42″ High
LW1542 17 bottles
LW1842 17 bottles
LW2442 27 bottles

- 3 3/4″ diameter bottle
- Lattices are ***not*** removable
- Lattice finished one side only
- Painted hardwood supplied for EverCore™

●	PE
●	APC
●	APFC
●	FPEB
❖	MI
	DE
●	AD_E
	CW
	RD
	ID
	CH
	TWR
●	XS
	XSG
	GD

Wall Wine Hutch

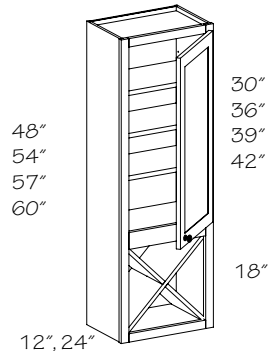

Specify R or L
12″ Deep
☆ **WWH181248 R or L**
☆ **WWH181254 R or L**
+☆**WWH181257 R or L**
+☆**WWH181260 R or L**
24″ Deep
WWH182448 R or L
WWH182454 R or L
\+ **WWH182457 R or L**
\+ **WWH182460 R or L**

\+ Attached Decorative Ends (AD_E) option ***not*** available
☆ Reduced Depth (RD) option ***not*** available

- Designed to set on countertop
- 24″ deep cabinet ***cannot*** be reduced to depth less than 12″

☆ When Reduced Depth (RD) is selected, wine storage section will always be 12″ deep. The cabinet when ordered from 24″ deep to 12 1/16″ deep will always have a back panel in the wine storage section that is up against the X cross members

	PE
❖	APC
●	APFC
●	FPEB
❖	MI
	DE
☆	AD_E
	CW
☆	RD
	ID
	CH
	TWR
●	XS
	XSG
●	GD

New

Wall - Diagonal Wine Storage Cabinet

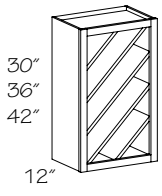

Ascending

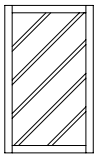

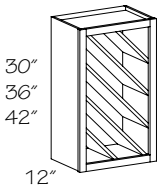

Descending

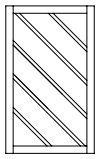

Ascending

WDWC1830 ▪A
WDWC1836 ▪A
WDWC1842 ▪A
WDWC2430 ▪A
WDWC2436 ▪A
WDWC2442 ▪A

Descending

WDWC1830 ▪D
WDWC1836 ▪D
WDWC1842 ▪D
WDWC2430 ▪D
WDWC2436 ▪D
WDWC2442 ▪D

Grey color coding indicates new product, size or code.

- 11/16" (17.5 mm) thick shelves
- Shelves fixed into position and are not adjustable
- Spacing between shelves is 4 1/8" wide, except top/bottom corner shelves which vary based on the overall cabinet size chosen

PE
❖ APC
● APFC
FPEB
❖ MI
DE
AD_E
CW
RD
ID
CH
TWR
● XS
XSG
GD

New

Wall - Offset Diagonal Wine Storage Cabinet

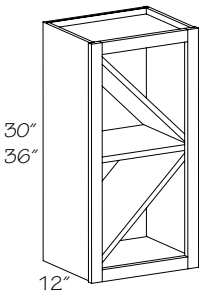

WODWC1530
WODWC1830
WODWC2130
WODWC1536
WODWC1836
WODWC2136

Grey color coding indicates new product, size or code.

- 11/16" (17.5 mm) thick shelves
- Shelves fixed into position and are not adjustable

PE
❖ APC
● APFC
FPEB
❖ MI
DE
AD_E
CW
RD
ID
CH
TWR
● XS
XSG
GD

Wine Storage Cabinet

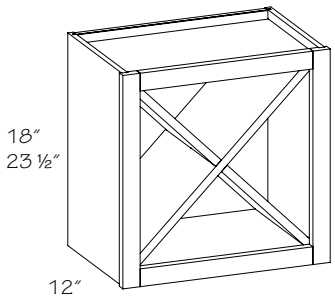

WSC1818
WSC2424

- Requires additional support. Installation between two cabinets or cabinet and wall recommended
- Painted hardwood supplied for EverCore™

When ordering an unfinished cabinet that has standard Matching Interior (MIV), you ***must*** use MIP, MIFP or FPEB to get a wood veneer matching interior. If the cabinet is Wood Veneer standard, ordered as All Plywood (APC) or with Furniture Plywood Ends (FPEB, APFC), wood veneer matching interior will be standard.

PE
❖ APC
● APFC
● FPEB
❖ MI
DE
AD_E
CW
RD
ID
CH
TWR
XS
XSG
GD

Wall Microwave Cabinets

WMC	27	18	36
code	width	depth	height

Construction Options and Modifications

❖	Included as standard
●	Available with an upcharge
☆	Available with exceptions
(Blank)	***Not*** available

PE	Plywood Ends
APC	All Plywood Construction
APFC	All Plywood Furniture Construction
FPEB	Furniture Plywood Ends
MI	Matching Interior
AD_E	Attached Decorative End
CW	Change Width
RD	Reduced Depth
ID	Increased Depth
CH	Change Height
XS	Extended Stile
GD	Glass Doors

Installation Notes: Installation of a wall cabinet 30" or wider, by itself, is ***not*** recommended by KraftMaid® and requires additional support, such as attachment to a soffit, or support from below.

Any wall cabinet over 24" wide or 30" high with a depth greater than 12" or butt doors ***must*** be installed between two cabinets, a cabinet and a wall, or supported from below.

Material dimensions listed may vary slightly from actual dimensions of the product.

Specifications subject to change without notice.

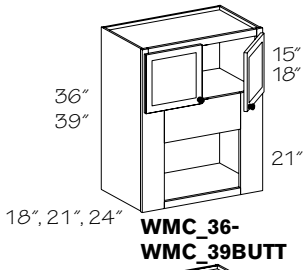

WMC_36-WMC_39BUTT

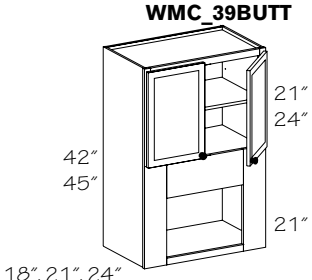

WMC_42-WMC_45

Wall Microwave Cabinet

36" High
Opening trimmable to:
Width: 16" to 25"
Height: 13" to 19"

WMC271836 (Butt)
WMC272136 (Butt)
WMC272436 (Butt)

Opening trimmable to:
Width: 19" to 28"
Height: 13" to 19"

WMC301836 BUTT
WMC302136 BUTT
WMC302436 BUTT

39" High
Opening trimmable to:
Width: 16" to 25"
Height: 13" to 19"

WMC271839 (Butt)
WMC272139 (Butt)
WMC272439 (Butt)

Opening trimmable to:
Width: 19" to 28"
Height: 13" to 19"

WMC301839 BUTT
WMC302139 BUTT
WMC302439 BUTT

42" High
Opening trimmable to:
Width: 16" to 25"
Height: 13 1/2" to 19 1/2"

WMC271842 (Butt)
WMC272142 (Butt)
WMC272442 (Butt)

Opening trimmable to:
Width: 19" to 28"
Height: 13 1/2" to 19 1/2"

WMC301842 BUTT
WMC302142 BUTT
WMC302442 BUTT

45" High
Opening trimmable to:
Width: 16" to 25"
Height: 13 1/2" to 19 1/2"

+ WMC271845 (Butt)
+ WMC272145 (Butt)
+ WMC272445 (Butt)

Opening trimmable to:
Width: 19" to 28"
Height: 13 1/2" to 19 1/2"

+ WMC301845 BUTT
+ WMC302145 BUTT
+ WMC302445 BUTT

+ Attached Decorative Ends (AD_E) option ***not*** available

Grey color coding indicates new product, size or code.

- Designed for "built-in" style microwaves
- Change Height (CH) modifications will be made in the upper door section
- ***Note: Must*** be installed between two cabinets or cabinet and wall with supplied connectors

●	PE
●	APC
●	APFC
●	FPEB
●	MI
☆	AD_E
●	CW
●	RD
	ID
●	CH
●	XS
●	GD

Installation of a wall cabinet 30" or wider, by itself, is ***not*** recommended by KraftMaid® and requires additional support, such as attachment to a soffit or support from below

Wall Microwave Cabinet–Extended Opening

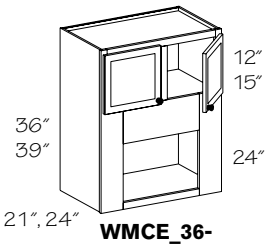

WMCE_36-WMCE_39BUTT

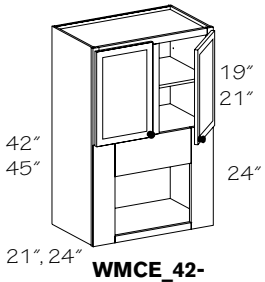

WMCE_42-WMCE_45BUTT

36" High
Opening trimmable to:
Width: 16" to 25"
Height: 16" to 22"

❒ **WMCE272136 (Butt)**
❒ **WMCE272436 (Butt)**

Opening trimmable to:
Width: 19" to 28"
Height: 16" to 22"

❒ **WMCE302136 BUTT**
❒ **WMCE302436 BUTT**

39" High
Opening trimmable to:
Width: 16" to 25"
Height: 16" to 22"

WMCE272139 (Butt)
WMCE272439 (Butt)

Opening trimmable to:
Width: 19" to 28"
Height: 16" to 22"

WMCE302139 BUTT
WMCE302439 BUTT

42" High
Opening trimmable to:
Width: 19" to 28"
Height: 16 1/2" to 22 1/2"

WMCE272142 (Butt)
WMCE272442 (Butt)

Opening trimmable to:
Width: 19" to 28"
Height: 16 1/2" to 22 1/2"

WMCE302142 BUTT
WMCE302442 BUTT

45" High
Opening trimmable to:
Width: 16" to 25"
Height: 16 1/2" to 22 1/2"

✣ **WMCE272145 (Butt)**
✣ **WMCE272445 (Butt)**

Opening trimmable to:
Width: 19" to 28"
Height: 16 1/2" to 22 1/2"

✣ **WMCE302145 BUTT**
✣ **WMCE302445 BUTT**

❒ Change Height (CH) option ***not*** available
✣ Attached Decorative Ends (AD_E) option ***not*** available

Grey color coding indicates new product, size or code.

- Designed for "built-in" style microwaves
- Change Height (CH) modifications will be made in the upper door section
- ***Note: Must*** be installed between two cabinets or cabinet and wall with supplied connectors

●	PE
●	APC
●	APFC
●	FPEB
●	MI
☆	AD_E
●	CW
●	RD
	ID
☆	CH
●	XS
●	GD

Wall Microwave Shelf Cabinet

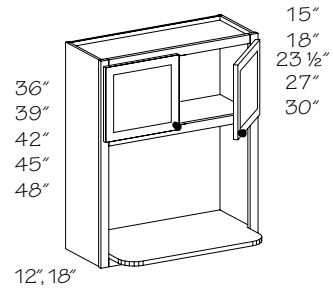

Inside Dimensions:	
36" High	
WMSC271236 (Butt)	24" x 18 3/4"
WMSC271836 (Butt)	24" x 18 3/4"
WMSC301236 BUTT	27" x 18 3/4"
39" High	
WMSC271239 (Butt)	24" x 18 3/4"
WMSC271839 (Butt)	24" x 18 3/4"
WMSC301239 BUTT	27" x 18 3/4"
42" High	
WMSC271242 (Butt)	24" x 16 1/4"
WMSC271842 (Butt)	24" x 16 1/4"
WMSC301242 BUTT	27" x 16 1/4"
45" High	
✣ **WMSC271245 (Butt)**	24" x 15 3/4"
✣ **WMSC271845 (Butt)**	24" x 15 3/4"
✣ **WMSC301245 BUTT**	27" x 15 3/4"
48" High	
WMSC271848 (Butt)	24" x 15 3/4"

✣ Attached Decorative Ends (AD_E) option ***not*** available

Grey color coding indicates new product, size or code.

- 36" and 39" high has no shelves, 42" and 45" high have one shelf and 48" high has two shelves in top section
- 3/4" matching shelf, 18" deep on 12" cabinets, 24" deep on 18" cabinets
- Designed for countertop style microwaves
- Change Height (CH) modifications will be made in the upper door section
- ***Note: Must*** be installed between two cabinets or cabinet and wall with supplied connectors

●	PE
●	APC
●	APFC
●	FPEB
❖	MI
☆	AD_E
	CW
●	RD
	ID
●	CH
●	XS
●	GD

Wall Microwave w/Solid Wood Shelf

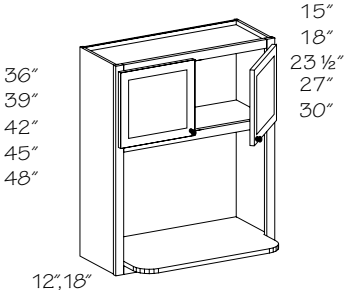

Inside Dimensions:	
36" High	
SWMSC271236 (Butt)	24" x 18 3/4"
SWMSC271836 (Butt)	24" x 18 3/4"
SWMSC301236 BUTT	27" x 18 3/4"
39" High	
SWMSC271239 (Butt)	24" x 18 3/4"
SWMSC271839 (Butt)	24" x 18 3/4"
SWMSC301239 BUTT	27" x 18 3/4"
42" High	
SWMSC271242 (Butt)	24" x 16 1/4"
SWMSC271842 (Butt)	24" x 16 1/4"
SWMSC301242 BUTT	27" x 16 1/4"
45" High	
✣ **SWMSC271245 (Butt)**	24" x 15 3/4"
✣ **SWMSC271845 (Butt)**	24" x 15 3/4"
✣ **SWMSC301245 BUTT**	27" x 15 3/4"
48" High	
SWMSC271848 (Butt)	24" x 15 3/4"

✣ Attached Decorative Ends (AD_E) option ***not*** available

Grey color coding indicates new product, size or code.

- 36" and 39" high has no shelves, 42" and 45" high have one shelf and 48" high has two shelves in top section
- 3/4" matching shelf, 18" deep on 12" cabinets, 24" deep on 18" cabinets
- Solid wood construction on matching lower shelf only
- Designed for countertop style microwaves
- Thermofoils are painted hardwood
- Change Height (CH) modifications will be made in the upper door section
- ***Note: Must*** be installed between two cabinets or cabinet and wall with supplied connectors

●	PE
●	APC
●	APFC
●	FPEB
❖	MI
☆	AD_E
	CW
●	RD
	ID
●	CH
●	XS
●	GD

Wall Compact Microwave Shelf

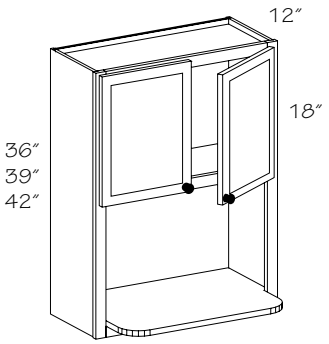

36″ High	*Inside Dimensions:*
WCMSC241236	21″ x 15 3/4″
WCMSC271236 (Butt)	24″ x 15 3/4″
39″ High	
WCMSC241239	21″ x 15 3/4″
WCMSC271239 (Butt)	24″ x 15 3/4″
42″ High	
WCMSC241242	21″ x 16 1/4″
WCMSC271242 (Butt)	24″ x 16 1/4″

- 18″ deep, 3/4″ matching shelf
- Designed for countertop style microwaves
- Change Height (CH) modifications will be made in the upper door section
- ***Note: Must*** be installed between two cabinets or cabinet and wall with supplied connectors

●	PE
●	APC
●	APFC
●	FPEB
❖	MI
●	AD_E
	CW
●	RD
	ID
●	CH
●	XS
●	GD

Grey color coding indicates new product, size or code.

Wall Compact Microwave w/Solid Wood Shelf

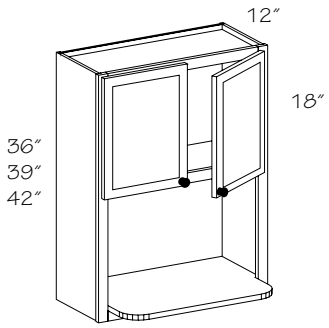

36″ High	*Inside Dimensions:*
SWCMSC241236	21″ x 15 3/4″
SWCMSC271236 (Butt)	24″ x 15 3/4″
39″ High	
SWCMSC241239	21″ x 15 3/4″
SWCMSC271239 (Butt)	24″ x 15 3/4″
42″ High	
SWCMSC241242	21″ x 16 1/4″
SWCMSC271242 (Butt)	24″ x 16 1/4″

- 18″ deep, 3/4″ matching shelf
- Solid wood construction on matching lower shelf only
- Designed for countertop style microwaves
- Thermofoils are painted hardwood
- Change Height (CH) modifications will be made in the upper door section
- ***Note: Must*** be installed between two cabinets or cabinet and wall with supplied connectors

●	PE
●	APC
●	APFC
●	FPEB
❖	MI
●	AD_E
	CW
●	RD
	ID
●	CH
●	XS
●	GD

Grey color coding indicates new product, size or code.

Wall Microwave Cabinet w/Drawer

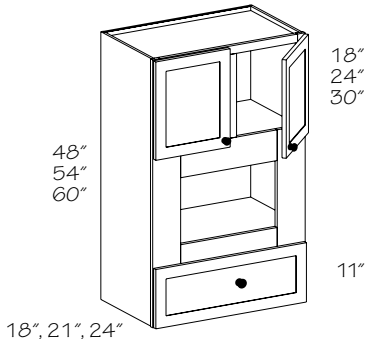

Cut out dimensions

Cabinet	Min. Width	Max. Width	Min. Height	Max. Height
WMCDE27_48	16″	25″	12″	15 1/2″
WMCDE27_54	16″	25″	12 1/2″	16″
WMCDE27_60	16″	25″	12″	15 1/2″
WMCDE30_48	19″	28″	12″	15 1/2″
WMCDE30_54	19″	28″	12 1/2″	16″
WMCDE30_60	19″	28″	12″	15 1/2″

No shelves in upper section 48″ High		*Two shelves in upper section 60″ High*
WMCD271848 (Butt)	+	**WMCD271860 (Butt)**
WMCD301848	+	**WMCD301860**
WMCD272148 (Butt)	+	**WMCD272160 (Butt)**
WMCD302148	+	**WMCD302160**
WMCD272448 (Butt)	+	**WMCD272460 (Butt)**
WMCD302448	+	**WMCD302460**

One shelf in upper section 54″ High

WMCD271854 (Butt)
WMCD301854
WMCD272154 (Butt)
WMCD302154
WMCD272454 (Butt)
WMCD302454

+ Attached Decorative Ends (AD_E) option ***not*** available

- One deep drawer
- Designed for "built-in" style microwaves
- Change Height (CH) modifications will be made in the upper door section
- ***Not*** intended as a wall mounted cabinet; unit ***must*** be supported by another cabinet or countertop

●	PE
●	APC
●	APFC
●	FPEB
●	MI
☆	AD_E
●	CW
●	RD
	ID
●	CH
●	XS
●	GD

Wall Microwave Cabinet w/Drawer–Extended Opening

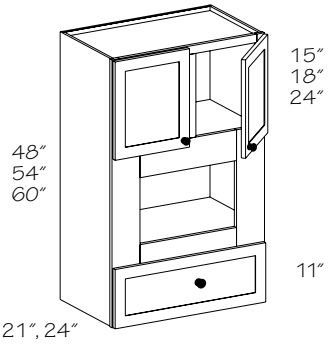

Cut out dimensions

Cabinet	Min. Width	Max. Width	Min. Height	Max. Height
WMCDE27_48	16″	25″	15″	18 1/2″
WMCDE27_54	16″	25″	15 1/2″	19″
WMCDE27_60	16″	25″	15″	18 1/2″
WMCDE30_48	19″	28″	15″	18 1/2″
WMCDE30_54	19″	28″	15 1/2″	19″
WMCDE30_60	19″	28″	15″	18 1/2″

No shelves in upper section
48″ High

WMCDE272148 (Butt) +
WMCDE302148 +
WMCDE272448 (Butt) +
WMCDE302448 +

One shelf in upper section
54″ High

WMCDE272154 (Butt)
WMCDE302154
WMCDE272454 (Butt)
WMCDE302454

Two shelves in upper section
60″ High

WMCDE272160 (Butt) +
WMCDE302160 +
WMCDE272460 (Butt) +
WMCDE302460 +

+ Attached Decorative Ends (AD_E) option ***not*** available

- One deep drawer
- Designed for "built-in" style microwaves
- Change Height (CH) modifications will be made in the upper door section
- ***Not*** intended as a wall mounted cabinet; unit ***must*** be supported by another cabinet or countertop

●	PE
●	APC
●	APFC
●	FPEB
●	MI
☆	AD_E
●	CW
●	RD
	ID
●	CH
●	XS
●	GD

Wall Microwave Box

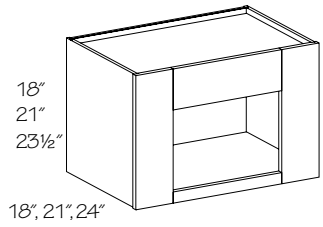

18″ High
Opening trimmable to:
Width: 16″ to 25″
Height: 11″ to 15 1/2″

WMB271818
WMB272118

Opening trimmable to:
Width: 19″ to 28″
Height: 11″ to 15 1/2″

WMB301818
WMB302118

21″ High
Opening trimmable to:
Width: 16″ to 25″ Height: 14″ to 18 1/2″

WMB271821
WMB272121
WMB272421

Opening trimmable to:
Width: 19″ to 28″
Height: 14″ to 18 1/2″

WMB301821
WMB302121
WMB302421

23 1/2″ High
Opening trimmable to:
Width: 16″ to 25″
Height: 17″ to 21 1/2″

WMB272124
WMB272424

Opening trimmable to:
Width: 19″ to 28″
Height: 17″ to 21 1/2″

WMB302124
WMB302424

- Designed for "built-in" style microwaves
- Contrasting Back Options (CBEB, CPLB, CVGR) ***not*** available
- Back Options (BEB and VGRB) ***not*** available
- Painted hardwood supplied for EverCore™
- Change Height (CH) and Change Width (CW) changes will occur in the cabinet opening - stiles and rails will ***not*** change
- ***Note: Must*** be installed between two cabinets or cabinet and wall with supplied connectors

●	PE
●	APC
●	APFC
●	FPEB
	MI
	AD_E
●	CW
●	RD
	ID
●	CH
	XS
	GD

Wall Microwave Shelf

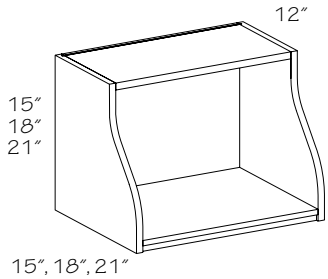

	15″ High	*Inside Dimensions:*
❍	**WMS211515**	19 3/8″ x 12 11/16″
	WMS241515	22 3/8″ x 12 11/16″
❍	**WMS211815**	19 3/8″ x 12 11/16″
	WMS241815	22 3/8″ x 12 11/16″
	18″ High	
	WMS241818	22 3/8″ x 15 11/16″
	WMS271818	25 3/8″ x 15 11/16″
	WMS301818	28 3/8″ x 15 11/16″
	WMS242118	22 3/8″ x 15 11/16″
	WMS272118	25 3/8″ x 15 11/16″
	WMS302118	28 3/8″ x 15 11/16″
	21″ High	
	WMS241821	22 3/8″ x 18 11/16″
	WMS271821	25 3/8″ x 18 11/16″
	WMS301821	28 3/8″ x 18 11/16″
	WMS242121	22 3/8″ x 18 11/16″
	WMS272121	25 3/8″ x 18 11/16″
	WMS302121	28 3/8″ x 18 11/16″

❍ Change Width (CW) option ***not*** available

- 3/4″ wood veneer construction
- Designed for countertop style microwaves
- Painted hardwood supplied for EverCore™
- ***Not*** available in Morristown; Melrose and Putnam supplied plain sawn
- Contrasting Back Options (CBEB, CPLB, CVGR) ***not*** available
- ***Note: Must*** be installed between two cabinets or cabinet and wall with supplied connectors

	PE
●	APC
	APFC
	FPEB
❖	MI
	AD_E
☆	CW
	RD
	ID
	CH
	XS
	GD



Do ***not*** design a wall hood or microwave shelf adjacent to a corner cabinet. The door of the corner cabinet will ***not*** function.

Wall Hoods

WHCC	36	24	30
Code	width	depth	height

Construction Options and Modifications

❖ Included as standard
● Available with an upcharge
☆ Available with exceptions
(Blank) ***Not*** available

PE	Plywood Ends
APC	All Plywood Construction
APFC	All Plywood Furniture Construction
FPEB	Furniture Plywood Ends
MI	Matching Interior
DE	Integrated Decorative End
CW	Change Width
RD	Reduced Depth
ID	Increased Depth
CH	Change Height
XS	Extended Stile
XSG	Integrated Extended Stile
GD	Glass Doors

Consult your local building code for rules and regulations that may apply to the installation of this product.

Material dimensions listed may vary slightly from actual dimensions of the product.

Specifications subject to change without notice.

Wall Hood Classic

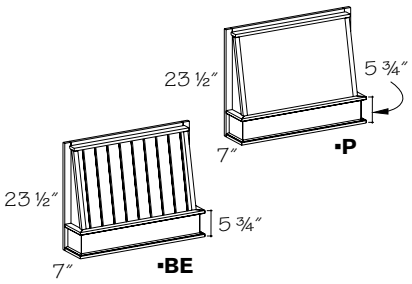

CRHF3024 ▪BE
CRHF3624 ▪BE
CRHF3024 ▪P
CRHF3624 ▪P

- Solid wood/wood veneer construction
- Metal liner required
- Requires Wall Hood Component Package "B" or "E", located before the Wall Hood Designs in this section
- ***Not*** available in Rustic Alder door styles
- ***Not*** available in High-Gloss Foil or Wood-Grain Foil door styles
- Painted hardwood supplied for EverCore™
- ***Not*** available in Morristown; Melrose and Putnam supplied plain sawn
- ***Note:*** Wall Hood ***must*** be installed between two cabinets

PE
● APC
APFC
FPEB
MI
DE
CW
RD
ID
CH
XS
XSG
GD

Peninsula Wall Hood Classic

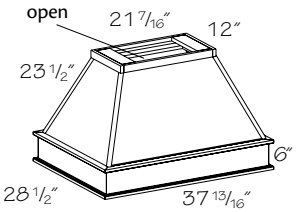

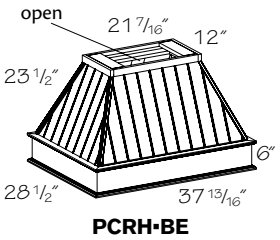

PCRH3624 ▪BE
PCRH3624 ▪P

- Solid wood/wood veneer construction
- Requires Wall Hood Component Package "C" or "F", located before the Wall Hood Designs in this section
- ***Not*** available in Rustic Alder door styles
- ***Not*** available in High-Gloss Foil or Wood-Grain Foil door styles
- Painted hardwood supplied for EverCore™
- ***Not*** available in Morristown; Melrose and Putnam supplied plain sawn
- ***Note:*** Wall hood ***must*** be securely anchored to ceiling or soffit

PE
● APC
APFC
FPEB
MI
DE
CW
RD
ID
CH
XS
XSG
GD

Wall Hood Matching

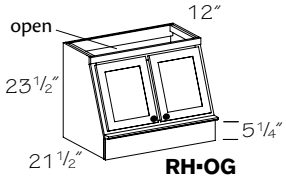

Ogee Molding
RH3024 ▪OG
RH3624 ▪OG

- Solid wood/wood veneer construction
- Metal liner required
- Doors open to facilitate duct installation and wiring
- Requires Wall Hood Component Package "A" or "D", located before the Wall Hood Designs in this section
- ***Not*** available in Rustic Alder door styles
- ***Not*** available in High-Gloss Foil or Wood-Grain Foil door styles
- Painted hardwood supplied for EverCore™
- ***Not*** available in Morristown; Melrose and Putnam supplied plain sawn
- ***Note:*** Wall Hood ***must*** be installed between two cabinets

PE
● APC
APFC
FPEB
MI
DE
CW
RD
ID
CH
XS
XSG
GD

Peninsula Wall Hood Matching

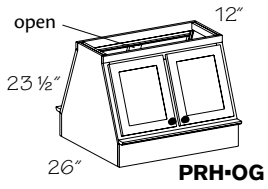

Ogee Molding

PRH3024 ▪OG
PRH3624 ▪OG

PE
● APC
APFC
FPEB
MI
DE
CW
RD
ID
CH
XS
XSG
GD

- Solid wood/wood veneer construction
- Metal liner required
- Doors open to facilitate duct installation and wiring
- Requires Wall Hood Component Package "C" or "F", located before the Wall Hood Designs in this section
- ***Not*** available in Rustic Alder door styles
- ***Not*** available in High-Gloss Foil or Wood-Grain Foil door styles
- Painted hardwood supplied for EverCore™
- ***Not*** available in Morristown; Melrose and Putnam supplied plain sawn
- ***Note:*** Wall hood ***must*** be securely anchored to ceiling or soffit

Wall Hood Classic Chimney

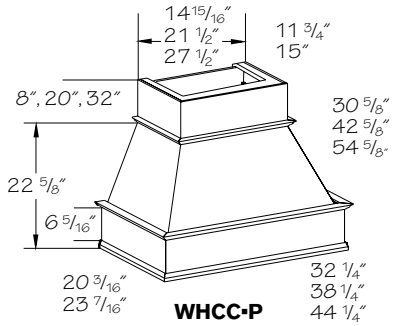

Plain
30 5/8″ High

WHCC301930 ▪P
WHCC361930 ▪P
WHCC362430 ▪P
WHCC422430 ▪P

42 5/8″ High

WHCC301942 ▪P
WHCC361942 ▪P
WHCC362442 ▪P
WHCC422442 ▪P

54 5/8″ High

WHCC301954 ▪P
WHCC361954 ▪P
WHCC362454 ▪P
WHCC422454 ▪P

PE
❖ APC
APFC
FPEB
MI
DE
CW
RD
ID
CH
XS
XSG
GD

- Solid wood/wood veneer construction
- Check local building codes for required clearances between the Wall Hood and cooking surface
- A 3″ space is recommended on the right and left side of this unit before beginning the adjacent cabinet runs
- 30 5/8″ high hoods are designed for use with 8 foot ceilings
- 42 5/8″ high hoods are designed for use with 9 ft. ceilings
- 54 5/8″ high hoods are designed for use with 10 ft. ceilings
- Lower molding matches Beaded Panel Molding (BPM8) profile, other molding matches Soffit Crown Molding profile (SCM8)
- Chimney section shipped separately
- Will accept optional onlays, ordered separately; see Molding Accents section of this book
- ***Not*** designed to be used with a soffit
- Painted hardwood supplied for EverCore™ and Thermofoil
- Painted or Stained hardwood supplied for Wood-Grain Foil door styles
- ***Not*** available in Morristown; Melrose and Putnam supplied plain sawn
- 19″ deep requires Wall Hood Component Package "J", located before the Wall Hood Designs in this section
- 24″ deep requires Wall Hood Component Package "G" or "P", located before the Wall Hood Designs in this section
- ***Note:*** Cabinetry and appliances located below these Wall Hoods ***must*** be pulled to a minimum of 27″deep and a maximum of 30″ deep for improved function
- ***Note:*** Wall Hood ***must*** be securely anchored to wall

Opening Sizes				
Cabinet	**Top Width**	**Top Depth**	**Bottom Width**	**Bottom Depth**
WHCC30	8″	7 9/16″	28 ½″	18 5/16″
WHCC36	14 9/16″	10 ¾″	34 ½″	21 9/16″
WHCC42	20 ½″	10 ¾″	40 ½″	21 9/16″

Select a Wall Hood, Chimney style when designing with open soffits. A Chimney style hood is selected when you want an unfitted look; a design that looks great with your door style, but matching or including the door style is ***not*** required.

Peninsula Wall Hood Classic Chimney

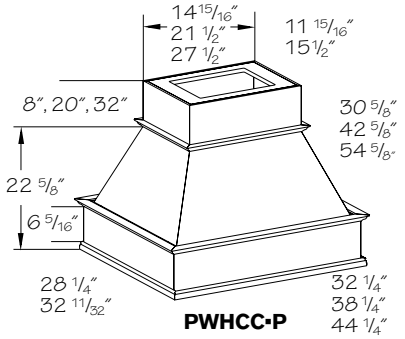

Plain
30 5/8" High

PWHCC302830 •P
PWHCC363330 •P
PWHCC423330 •P

42 5/8" High

PWHCC302842 •P
PWHCC363342 •P
PWHCC423342 •P

54 5/8" High

PWHCC302854 •P
PWHCC363354 •P
PWHCC423354 •P

Opening Sizes				
Cabinet	Top Width	Top Depth	Bottom Width	Bottom Depth
PWHCC30	7 15/16"	6 15/16"	28 ½"	24 ½"
PWHCC36	14 ½"	10 ½"	34 ½"	28 19/33"
PWHCC42	20 ½"	10 ½"	40 ½"	21 19/32"

PE
❖ APC
APFC
FPEB
MI
DE
CW
RD
ID
CH
XS
XSG
GD

- Solid wood/wood veneer construction
- Check local building codes for required clearances between the Wall Hood and cooking surface
- A 3" space is recommended on the right and left side of this unit before beginning the adjacent cabinet runs
- 30 5/8" high hoods are designed for use with 8 foot ceilings
- 42 5/8" high hoods are designed for use with 9 ft. ceilings
- 54 5/8" high hoods are designed for use with 10 ft. ceilings
- Lower molding matches Beaded Panel Molding (BPM8) profile, other molding matches Soffit Crown Molding profile (SCM8)
- Chimney section shipped separately
- Will accept optional onlays, ordered separately; see Molding Accents section of this book
- ***Not*** designed to be used with a soffit
- Painted hardwood supplied for EverCore™ and Thermofoil
- Painted or Stained hardwood supplied for Wood-Grain Foil door styles
- ***Not*** available in Morristown; Melrose and Putnam supplied plain sawn
- 30" wide requires Wall Hood Component Package "K", located before the Wall Hood Designs in this section
- 36"–42" wide requires Wall Hood Component Package "H" or "O", located before the Wall Hood Designs in this section
- ***Note:*** Cabinetry and appliances located below these Wall Hoods ***must*** be pulled to a minimum of 27"deep and a maximum of 30" deep for improved function
- ***Note:*** Wall hood ***must*** be securely anchored to ceiling

Apply your molding of choice at the ceiling along the top edge of the Wall Hood Chimney to present a finished look or to coordinate with adjacent cabinetry.A beaded styled hood may be selected to coordinate with beaded/v-grooved paneling and doors, but is ***not*** required.

Wall Hood Classic Chimney Flat Panel Valance

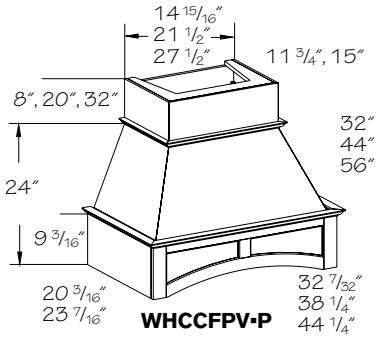

Plain
32" High

WHCCFPV301932 •P
WHCCFPV361932 •P
WHCCFPV362432 •P
WHCCFPV422432 •P

44" High

WHCCFPV301944 •P
WHCCFPV361944 •P
WHCCFPV362444 •P
WHCCFPV422444 •P

56" High

WHCCFPV301956 •P
WHCCFPV361956 •P
WHCCFPV362456 •P
WHCCFPV422456 •P

Opening Sizes				
Cabinet	Top Width	Top Depth	Bottom Width	Bottom Depth
WHCCFPV30	8"	7 9/16"	28 5/8"	18 5/16"
WHCCFPV36	14 9/16"	10 ¾"	34 5/8"	21 9/16"
WHCCFPV42	20 ½"	10 ¾"	40 5/8"	21 9/16"

PE
❖ APC
APFC
FPEB
MI
DE
CW
RD
ID
CH
XS
XSG
GD

- Solid wood/wood veneer construction
- Check local building codes for required clearances between the Wall Hood and cooking surface
- A 3" space is recommended on the right and left side of this unit before beginning the adjacent cabinet runs
- 32" high hoods are designed for use with 8 foot ceilings
- 44" high hoods are designed for use with 9 ft. ceilings
- 56" high hoods are designed for use with 10 ft. ceilings
- Decorative molding matches Soffit Crown Molding profile (SCM8)
- Chimney section shipped separately
- ***Not*** designed to be used with a soffit
- Painted hardwood supplied for EverCore™ and Thermofoil
- ***Not*** available in High-Gloss Foil or Wood-Grain Foil door styles
- ***Not*** available in Morristown; Melrose and Putnam supplied plain sawn
- 19" deep requires Wall Hood Component Package "J", located before the Wall Hood Designs in this section
- 24" deep requires Wall Hood Component Package "G" or "P", located before the Wall Hood Designs in this section
- ***Note:*** Cabinetry and appliances located below these Wall Hoods ***must*** be pulled to a minimum of 27"deep and a maximum of 30" deep for improved function
- ***Note:*** Wall Hood ***must*** be securely anchored to wall

A Wall Hood Classic Chimney Flat Panel Valance coordinates best with flat panel door styles. It may ***not*** match the door exactly, but will blend into the design and enhance the appearance of the entire room.

Peninsula Wall Hood Classic Chimney Flat Panel Valance

PE
❖ APC
APFC
FPEB
MI
DE
CW
RD
ID
CH
XS
XSG
GD

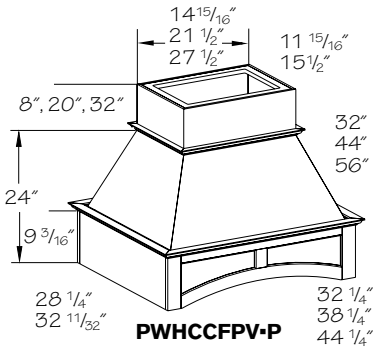

Plain
32″ High
PWHCCFPV302832 ▪P
PWHCCFPV363332 ▪P
PWHCCFPV423332 ▪P
44″ High
PWHCCFPV302844 ▪P
PWHCCFPV363344 ▪P
PWHCCFPV423344 ▪P
56″ High
PWHCCFPV302856 ▪P
PWHCCFPV363356 ▪P
PWHCCFPV423356 ▪P

Opening Sizes				
Cabinet	Top Width	Top Depth	Bottom Width	Bottom Depth
PWHCCFPV30	7 15/16″	6 15/16″	28 5/8″	24 1/2″
PWHCCFPV36	14 1/2″	10 1/2″	34 5/8″	28 1/2″
PWHCCFPV42	20 1/2″	10 1/2″	40 5/8″	28 1/2″

- Solid wood/wood veneer construction
- Check local building codes for required clearances between the Wall Hood and cooking surface
- A 3″ space is recommended on the right and left side of this unit before beginning the adjacent cabinet runs
- 32″ high hoods are designed for use with 8 foot ceilings
- 44″ high hoods are designed for use with 9 ft. ceilings
- 56″ high hoods are designed for use with 10 ft. ceilings
- Decorative molding matches Soffit Crown Molding profile (SCM8)
- Chimney section shipped separately
- ***Not*** designed to be used with a soffit
- Painted hardwood supplied for EverCore™ and Thermofoil
- ***Not*** available in High-Gloss Foil or Wood-Grain Foil door styles
- ***Not*** available in Morristown; Melrose and Putnam supplied plain sawn
- 30″ wide requires Wall Hood Component Package "K", located before the Wall Hood Designs in this section
- 36″–42″ wide requires Wall Hood Component Package "H" or "O", located before the Wall Hood Designs in this section
- ***Note:*** Cabinetry and appliances located below these Wall Hoods ***must*** be pulled to a minimum of 27″deep and a maximum of 30″ deep for improved function
- ***Note:*** Wall hood ***must*** be securely anchored to ceiling

Wall Hood Classic Chimney Raised Panel Valance

PE
❖ APC
APFC
FPEB
MI
DE
CW
RD
ID
CH
XS
XSG
GD

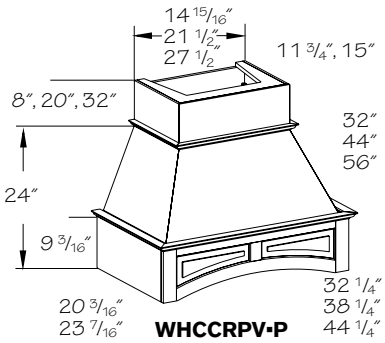

Plain
32″ High
WHCCRPV301932 ▪P
WHCCRPV361932 ▪P
WHCCRPV362432 ▪P
WHCCRPV422432 ▪P
44″ High
WHCCRPV301944 ▪P
WHCCRPV361944 ▪P
WHCCRPV362444 ▪P
WHCCRPV422444 ▪P
56″ High
WHCCRPV301956 ▪P
WHCCRPV361956 ▪P
WHCCRPV362456 ▪P
WHCCRPV422456 ▪P

Opening Sizes				
Cabinet	Top Width	Top Depth	Bottom Width	Bottom Depth
WHCCRPV30	8″	7 9/16″	28 5/8″	18 5/16″
WHCCRPV36	14 9/16″	10 3/4″	34 5/8″	21 9/16″
WHCCRPV42	20 1/2″	10 3/4″	40 5/8″	21 9/16″

- Solid wood/wood veneer construction
- A 3″ space is recommended on the right and left side of this unit before beginning the adjacent cabinet runs
- Decorative molding matches Soffit Crown Molding profile (SCM8)
- Chimney section shipped separately
- ***Not*** designed to be used with a soffit
- Painted hardwood supplied for EverCore™ and Thermofoil
- ***Not*** available in Morristown; Melrose and Putnam supplied plain sawn
- ***Not*** available in High-Gloss Foil or Wood-Grain Foil door styles
- 19″ deep requires Wall Hood Component Package "J", located before the Wall Hood Designs in this section
- 24″ deep requires Wall Hood Component Package "G" or "P", located before the Wall Hood Designs in this section
- ***Note:*** Cabinetry and appliances located below these Wall Hoods ***must*** be pulled to a minimum of 27″deep and a maximum of 30″ deep for improved function
- ***Note:*** Wall Hood ***must*** be securely anchored to wall

The Wall Hood Classic Chimney Raised Panel Valance includes a representative raised panel profile that blends with most raised panel door styles. It may ***not*** match the chosen door style exactly. Consider designing in a valance on the adjacent wall of the cooking area to coordinate with this style hood.

Peninsula Wall Hood Classic Chimney Raised Panel Valance

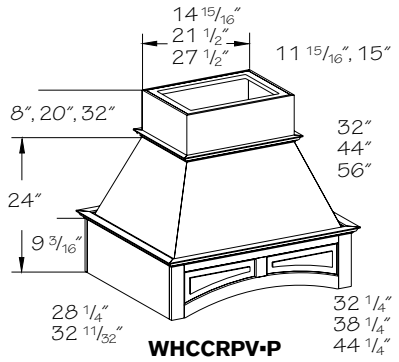

WHCCRPV▪P

Plain

32″ High

PWHCCRPV302832 ▪P
PWHCCRPV363332 ▪P
PWHCCRPV423332 ▪P

44″ High

PWHCCRPV302844 ▪P
PWHCCRPV363344 ▪P
PWHCCRPV423344 ▪P

56″ High

PWHCCRPV302856 ▪P
PWHCCRPV363356 ▪P
PWHCCRPV423356 ▪P

Opening Sizes				
Cabinet	Top Width	Top Depth	Bottom Width	Bottom Depth
PWHCCRPV30	7 15/16″	6 15/16″	28 3/8″	24 1/2″
PWHCCRPV36	14 1/2″	10 1/2″	34 3/8″	28 1/2″
PWHCCRPV42	20 1/2″	10 1/2″	40 3/8″	28 1/2″

PE
❖ APC
APFC
FPEB
MI
DE
CW
RD
ID
CH
XS
XSG
GD

- Solid wood/wood veneer construction
- Check local building codes for required clearances between the Wall Hood and cooking surface
- A 3″ space is recommended on the right and left side of this unit before beginning the adjacent cabinet runs
- 32″ high hoods are designed for use with 8 foot ceilings
- Decorative molding matches Soffit Crown Molding profile (SCM8)
- Chimney section shipped separately
- ***Not*** designed to be used with a soffit
- Painted hardwood supplied for EverCore™ and Thermofoil
- ***Not*** available in Wood-Grain Foil door styles
- ***Not*** available in Morristown; Melrose and Putnam supplied plain sawn
- 30″ wide requires Wall Hood Component Package "K", located before the Wall Hood Designs in this section
- 36″–42″ wide requires Wall Hood Component Package "H" or "O", located before the Wall Hood Designs in this section
- ***Note:*** Cabinetry and appliances located below these Wall Hoods ***must*** be pulled to a minimum of 27″deep and a maximum of 30″ deep for improved function
- ***Note:*** Wall hood ***must*** be securely anchored to ceiling

Wall Hood Box

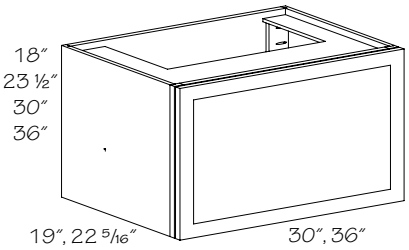

WHB30-36

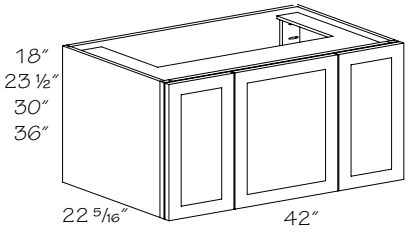

WHB42

18″ High

WHB301818
WHB361818
WHB362118
WHB422118

23 1/2″ High

WHB301824
WHB361824
WHB362124
WHB422124

30″ High

WHB301830
WHB361830
WHB362130
WHB422130

36″ High

WHB301836
WHB361836
WHB362136
WHB422136

PE
APC
❖ APFC
FPEB
MI
DE
CW
RD
ID
CH
XS
XSG
GD

- Solid wood/wood veneer construction
- Thermofoils are painted hardwood
- All door styles will default to full overlay
- Doors are attached by false front clips. ***Not*** operational
- Designed to align with top of adjacent cabinets
- 30" and 36" wide hoods have a single door panel
- 42" wide hoods have three door panels
- 19" deep (18" nominal) requires Wall Hood Component Package "J", located before the Wall Hood Designs in this section
- 22 5/16" (21" nominal) deep requires Wall Hood Component Package "G" or "P", located before the Wall Hood Designs in this section
- Check local building codes for required clearances between the Wall Hood and cooking surface
- The 18" high Wall Hood Box will require a soffit or a molding box application to house the duct work for the blower unit
- ***Not*** available in Belmont Roman, Belmont Square, Hanley Roman, Hanley Square or Harper door styles
- ***Note:*** Square doors will be supplied when ordered in arched door styles
- ***Note:*** Cabinetry and appliances located below these Wall Hoods ***must*** be pulled to a minimum of 27″deep and a maximum of 30″ deep for improved function

Wall Hood Box Valance

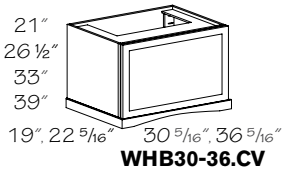

WHB30-36.CV

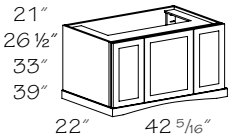

WHB42.CV

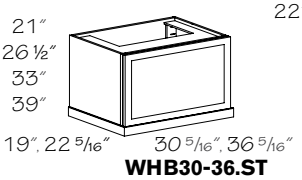

WHB30-36.ST

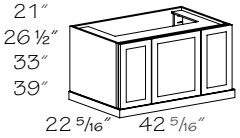

WHB42.ST

Cove Valance	*Straight Valance*
21″ High	*21″ High*
WHB301821 •CV	**WHB301821 •ST**
WHB361821 •CV	**WHB361821 •ST**
WHB362121 •CV	**WHB362121 •ST**
WHB422121 •CV	**WHB422121 •ST**
26 1/2″ High	*26 1/2″ High*
WHB301827 •CV	**WHB301827 •ST**
WHB361827 •CV	**WHB361827 •ST**
WHB362127 •CV	**WHB362127 •ST**
WHB422127 •CV	**WHB422127 •ST**
33″ High	*33″ High*
WHB301833 •CV	**WHB301833 •ST**
WHB361833 •CV	**WHB361833 •ST**
WHB362133 •CV	**WHB362133 •ST**
WHB422133 •CV	**WHB422133 •ST**
39″ High	*39″ High*
WHB301839 •CV	**WHB301839 •ST**
WHB361839 •CV	**WHB362139 •ST**
WHB362139 •CV	**WHB361839 •ST**
WHB422139 •CV	**WHB422139 •ST**

PE
APC
❖ APFC
FPEB
MI
DE
CW
RD
ID
CH
XS
XSG
GD

- Solid wood/wood veneer construction
- Thermofoils are painted hardwood
- All door styles will default to full overlay
- Doors are attached by false front clips. ***Not*** operational
- Designed to align with top of adjacent cabinets
- Valance adds 3″ to overall height and 5/32″ width to both sides
- Valances will be supplied in plain-sawn material for Quartersawn Cherry and Quartersawn Maple door styles
- Includes (2) Wall Hood Box Fillers, shipped separately
- 30 5/16″ and 36 5/16″ wide hoods have a single door panel
- 42 5/16″ wide hoods have three door panels
- 19″ deep (18″ nominal) requires Wall Hood Component Package "J", located before the Wall Hood Designs in this section
- 22 5/16″ (21″ nominal) deep requires Wall Hood Component Package "G" or "P", located before the Wall Hood Designs in this section
- Check local building codes for required clearances between the Wall Hood and cooking surface
- Filler strips are used when butting adjacent cabinets against the Wall Hood Box. Fillers ***must*** be used in this application to avoid gaps between cabinet boxes
- ***Not*** available in Belmont Roman, Belmont Square, Hanley Roman, Hanley Square or Harper door styles
- ***Note:*** Square doors will be supplied when ordered in arched door styles
- ***Note:*** Cabinetry and appliances located below these Wall Hoods ***must*** be pulled to a minimum of 27″deep and a maximum of 30″ deep for improved function

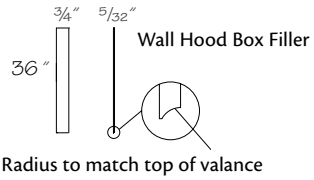



The Wall Hood Box Filler should be used when installing the hood box between two wall cabinets

Wall Hood Box w/Columns & Wall Hood Box w/Columns w/Extra Large Cove Top Plate

New

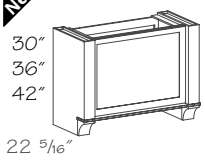

WHBC362230-
WHBC542242

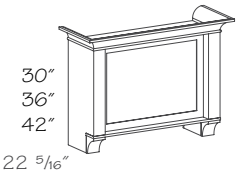

WHBC362230•XLCVM-
WHBC542242•XLCVM

Without Top Plate	*With Top Plate*
WHBC362230	WHBC362230•XLCVM
WHBC422230	WHBC422230•XLCVM
WHBC482230	WHBC482230•XLCVM
WHBC542230	WHBC542230•XLCVM
WHBC362236	WHBC362236•XLCVM
WHBC422236	WHBC422236•XLCVM
WHBC482236	WHBC482236•XLCVM
WHBC542236	WHBC542236•XLCVM
WHBC362242	WHBC362242•XLCVM
WHBC422242	WHBC422242•XLCVM
WHBC482242	WHBC482242•XLCVM
WHBC542242	WHBC542242•XLCVM

PE
❖ APC
APFC
FPEB
MI
DE
CW
RD
ID
CH
XS
XSG
GD

- ***Not*** available in mitered door styles, quartersawn door styles, rustic door styles, Evercore™ door styles, slab door styles, and all High-gloss foil, Thermofoil or Wood-Grain foil door styles
- Solid wood/wood veneer construction
- Front panel designed to coordinate with the selected door style
- Check local building codes for required clearances between the Wall Hood and cooking surface
- 36″ wide cabinet requires Wall Hood Component Package "T"
- 42″, 48″ and 54″ cabinets require Wall Hood Component Package "R" or "S"
- Front panel is removable to facilitate duct installation and wiring
- Top molding on Wall Hood Box w/Columns w/ Extra Large Cove Molding matches Extra Large Cove Molding (XLCVM8)
- Molding top plate of Wall Hood Box w/Columns w/Extra Large Cove Top Plate adds 6 3/4″ to the width, 3 3/8″ to the depth and 4 1/2″ to the height
- ***Note:*** Cabinetry and appliances located below these Wall Hoods ***must*** be pulled to a minimum of 27″deep and a maximum of 30″ deep for improved function

Grey color coding indicates new product, size or code.

Opening Sizes				
Cabinet	**Top Width**	**Top Depth**	**Bottom Width**	**Bottom Depth**
WHBC362230	21 13/16″	17 3/4″	21 13/16″	17 3/4″
WHBC422230	27 13/16″	17 3/4″	27 13/16″	17 3/4″
WHBC482230	33 13/16″	17 3/4″	33 13/16″	17 3/4″
WHBC542230	39 13/16″	17 3/4″	39 13/16″	17 3/4″
WHBC362236	21 13/16″	17 3/4″	21 13/16″	17 3/4″
WHBC422236	27 13/16″	17 3/4″	27 13/16″	17 3/4″
WHBC482236	33 13/16″	17 3/4″	33 13/16″	17 3/4″
WHBC542236	39 13/16″	17 3/4″	39 13/16″	17 3/4″
WHBC362242	21 13/16″	17 3/4″	21 13/16″	17 3/4″
WHBC422242	27 13/16″	17 3/4″	27 13/16″	17 3/4″
WHBC482242	33 13/16″	17 3/4″	33 13/16″	17 3/4″
WHBC542242	39 13/16″	17 3/4″	39 13/16″	17 3/4″

Wall Hood Matching Straight Valance

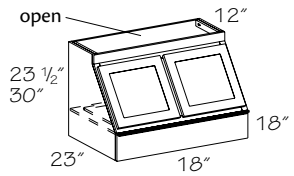

WHMSV36

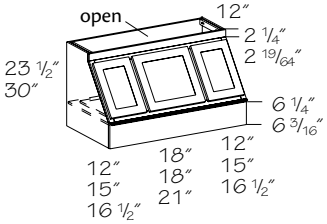

WHMSV42- 54

23 1/2" High

WHMSV3624
WHMSV4224
WHMSV4824
WHMSV5424

30" High

WHMSV3630
WHMSV4230
WHMSV4830
WHMSV5430

- Solid wood/wood veneer construction
- 23 1/2″ high units are designed to align with 90″ cabinets
- 30″ high hoods are designed to align with 96″ high cabinets
- Will accept optional onlays, ordered separately; see Molding Accents section of this book
- Check local building codes for required clearances between the Wall Hood and cooking surface
- Requires Wall Hood Component Package "G", located before the Wall Hood Designs in this section
- Doors open to facilitate duct installation and wiring
- Thermofoils are painted hardwood
- ***Not*** available in Morristown; Melrose and Putnam supplied plain sawn
- ***Note:*** Wall Hood ***must*** be installed between two cabinets
- ***Note:*** Cabinetry and appliances located below these Wall Hoods ***must*** be pulled to a minimum of 27″deep and a maximum of 30″ deep for improved function

PE
APC
❖ APFC
FPEB
MI
DE
CW
RD
ID
CH
XS
XSG
GD

Opening Sizes						
Cabinet	**Top Width**	**Top Depth**	**Bottom Width**	**Bottom Depth**	**Floor Opening Width**	**Floor Opening Depth**
WHMSV36	33 1/8″	10 9/16″	34 5/8″	21 9/16″	29 1/8″	17″
WHMSV42	39 1/8″	10 9/16″	40 5/8″	21 9/16″	29 1/8″	17″
WHMSV48	45 1/8″	10 9/16″	46 5/8″	21 9/16″	29 1/8″	17″
WHMSV54	51 1/8″	10 9/16″	52 5/8″	21 9/16″	29 1/8″	17″

Wall Hood Cove Application

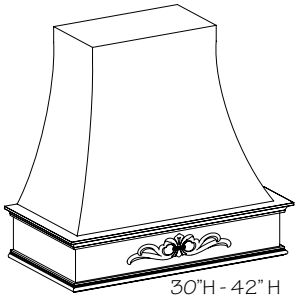

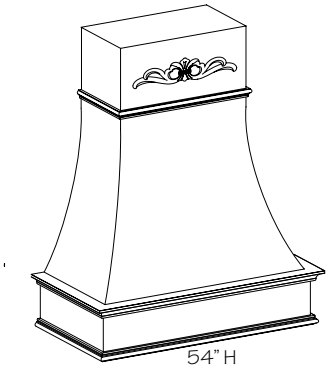

Onlays

- Make the cooking area a dramatic focal point by adding a drawer front, appliance panel, molding or onlay to the cove hood to create architectural interest
- Decorate the front apron of the hood with a drawer front to add architectural interest, which can be ordered through the Custom Appliance Panel Program
- Customize the 12" H cap on the 54" H units with a molding stack, custom appliance panel used as wainscot, or a decorative onlay
- Don't forget to trim out the top of your hood with the same top molding you are using for the wall cabinets in your kitchen

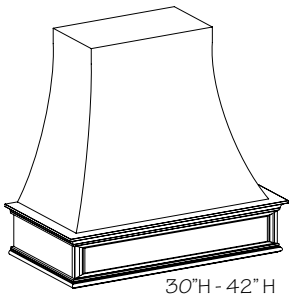

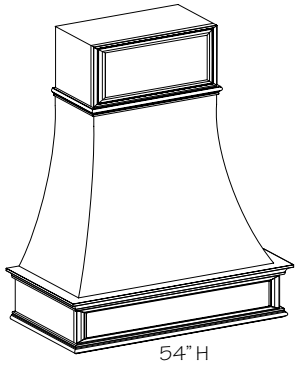

Drawer Front Panels

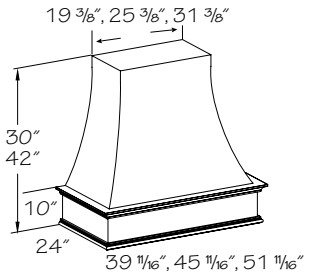

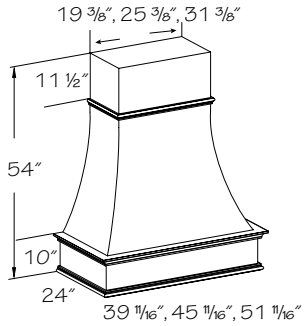

Wall Hood Cove

30" High

WHCV362430
WHCV422430
WHCV482430

42" High

WHCV362442
WHCV422442
WHCV482442

54" High

❊ **WHCV362454**
❊ **WHCV422454**
❊ **WHCV482454**

❊ 54" Cove Hood will have trim molding approximately 12" from the top of the chimney

PE
❖ APC
APFC
FPEB
MI
DE
CW
RD
ID
CH
XS
XSG
GD

- Small Cove Casing (SCVCS) used with top component
- Available in Cherry, EverCore™, Thermofoil, Maple and Wood-Grain Foil door styles only
- Painted hardwood supplied for EverCore™
- Painted or Stained hardwood supplied for Wood-Grain Foil door styles
- Solid wood/wood veneer construction
- Check local building codes for required clearances between the Wall Hood and cooking surface
- Requires Wall Hood Component Package "G" or "P", located before the Wall Hood Designs in this section
- A 3" space is recommended on the right and left side of this unit before beginning the adjacent cabinet runs
- 30" high hoods are designed for use with 8 foot ceilings
- 42" high hoods are designed for use with 9 foot ceilings
- 54" high hoods are designed for use with 10 ft. ceilings
- Decorative molding on top matches Small Cove Molding profile (SCVM8). Bottom molding matches Cove Light Rail profile (CVLR8)
- Chimney section shipped separately
- Recirculating component packages are ***not*** available
- ***Not*** designed to be used with a soffit
- ***Note:*** Cabinetry and appliances located below these Wall Hoods ***must*** be pulled to a minimum of 27"deep and a maximum of 30" deep for improved function
- ***Note:*** Wall Hood ***must*** be securely anchored to wall

Opening Sizes				
Cabinet	**Top Width**	**Top Depth**	**Bottom Width**	**Bottom Depth**
WHCV36	12 13/16"	10 3/4"	34 1/2"	21 5/8"
WHCV42	18 13/16"	10 3/4"	40 1/2"	21 5/8"
WHCV48	24 13/16"	10 3/4"	46 1/2"	21 5/8"
Surface Area Dimensions for Decorative Onlay Application				
Cabinet	**Front Width**	**Front Height**	**Side Width**	**Side Height**
WHCV36	36"	6 3/8"	22 1/4"	6 3/8"
WHCV42	42"	6 3/8"	22 1/4"	6 3/8"
WHCV48	48"	6 3/8"	22 1/4"	6 3/8"

Order a decorative drawer front from our Custom Appliance panel program to create a customized insert that matches your door profile for the front apron of your hood.

You may also use a drawer front to create a matching custom look on the 12" cap used to create the 54"H units.

Wall Hood Mantle Matching Application

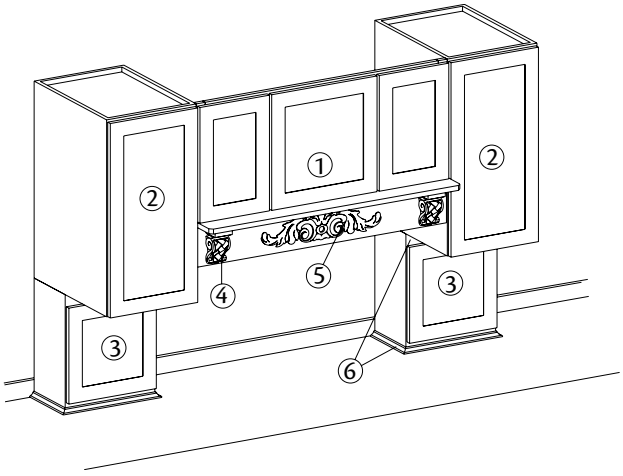

- Gain a "Mantle" style appearance in your kitchen design while maximizing your storage
- Personalize the design by incorporating molding and companion onlays to enhance the cooking focal point of the kitchen
- Wall Hood Mantle Cabinets ***must*** be used to support the hood. The increased overall depth makes a "bump-out" focal point that is easy to design
- 18" deep Wall Hood Mantle Cabinets are to be used with 30"–36" Wall Hood Mantle Matching (WHMM) units only. Larger units will ***not*** ventilate properly
- Add an LED Lighting Kit near the front, beneath the Wall Hood Mantle Cabinets (B) to highlight lower storage
- Create a hearth surround for the cooking area in your kitchen with components that work as a system for 84", 87", 90", 93" and 96" high cabinetry designs

1. Wall Hood Mantle Matching (WHMM)
2. Wall Hood Mantle Cabinet (WHMC)
3. Under Cabinet Door Storage (UCDS)
4. Corbels
5. Onlay
6. 3" rails allow for molding application at top or bottom of Under Cabinet Door Storage

Wall Hood Mantle Matching

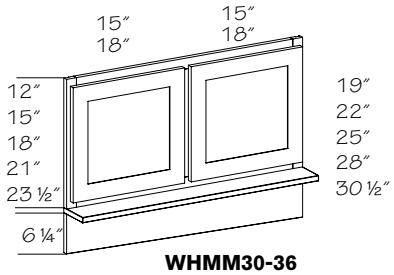

WHMM30-36

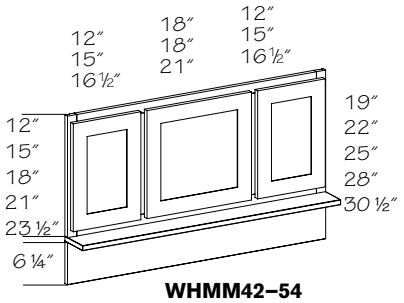

WHMM42–54

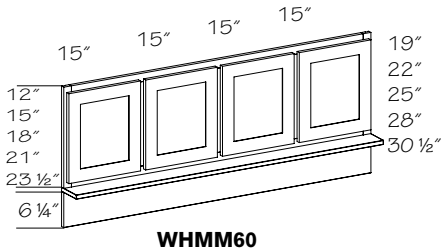

WHMM60

19″ High

WHMM3019
WHMM3619
WHMM4219
WHMM4819
WHMM5419
WHMM6019

22″ High

WHMM3022
WHMM3622
WHMM4222
WHMM4822
WHMM5422
WHMM6022

25″ High

WHMM3025
WHMM3625
WHMM4225
WHMM4825
WHMM5425
WHMM6025

28″ High

WHMM3028
WHMM3628
WHMM4228
WHMM4828
WHMM5428
WHMM6028

30 1/2″ High

WHMM3031
WHMM3631
WHMM4231
WHMM4831
WHMM5431
WHMM6031

	PE
❖	APC
	APFC
	FPEB
	MI
	DE
	CW
	RD
	ID
	CH
	XS
	XSG
	GD

- Solid wood/wood veneer construction
- No end panels, ***must*** be supported on each side by Wall Hood Mantle Cabinet or Wall Column
- 3/4″ thick, 4 1/4″ deep solid wood shelf
- 19″ high hoods are designed to be set 29″ above the cooking surface (84″ ceiling)
- 22″ high hoods are designed to be set 29″ above the cooking surface (87″ ceiling)
- 25″ high hoods are designed to be set 29″ above the cooking surface (90″ ceiling)
- 28″ high hoods are designed to be set 29″ above the cooking surface (93″ ceiling)
- 30 1/2″ high hoods are designed to be set 29 1/2″ above the cooking surface (96″ ceiling)
- 30″ and 36″ wide used at 18″ depth requires Wall Hood Component Package "L", located before the Wall Hood Designs in this section. Component package "L" is available for 18″ deep hoods only
- 36″–60″ wide used at 21″ deep will use Wall Hood Component Package "I" or "Q", located before the Wall Hood Designs in this section
- Doors open to facilitate duct installation and wiring
- Will accept optional onlays, ordered separately; see Molding Accents section of this book
- Thermofoils are painted hardwood
- ***Not*** available in Morristown; Melrose and Putnam supplied plain sawn
- ***Note:*** Cabinetry and appliances located below these Wall Hoods ***must*** be pulled to a minimum of 27″deep and a maximum of 30″ deep for improved function

Choose the Wall Hood Mantel Matching when you prefer a larger, wider focal point that matches your chosen door style. Personalize the front shelf area with an onlay or corbel. Personalize the design by incorporating companion onlays to enhance the cooking focal point of the kitchen

Wall Hood Mantle Cabinet

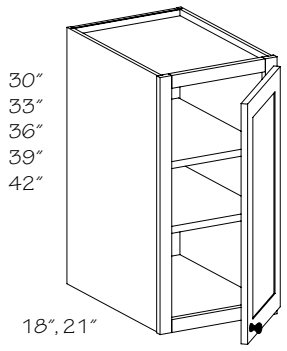

Specify R or L
Two Shelves
30″ High

WHMC121830 R or L
WHMC151830 R or L
WHMC181830 R or L
WHMC122130 R or L
WHMC152130 R or L
WHMC182130 R or L

33″ High

WHMC121833 R or L
WHMC151833 R or L
WHMC181833 R or L
WHMC122133 R or L
WHMC152133 R or L
WHMC182133 R or L

Specify R or L
Three Shelves
36″ High

WHMC121836 R or L
WHMC151836 R or L
WHMC181836 R or L
WHMC122136 R or L
WHMC152136 R or L
WHMC182136 R or L

39″ High

WHMC121839 R or L
WHMC151839 R or L
WHMC181839 R or L
WHMC122139 R or L
WHMC152139 R or L
WHMC182139 R or L

42″ High

WHMC121842 R or L
WHMC151842 R or L
WHMC181842 R or L
WHMC122142 R or L
WHMC152142 R or L
WHMC182142 R or L

	PE
●	APC
☆	APFC
❖	FPEB
●	MI
●	DE
	CW
	RD
	ID
	CH
●	XS
●	XSG
●	GD

- Additional support required
- 18″ deep Wall Hood Mantle Cabinets are to be used with 30″–36″ Wall Hood Mantle Matching (WHMM) units only. Larger units will ***not*** ventilate properly
- Thermofoils are painted hardwood
- Bottom door is always square
- Void All Door and Drawer Front option (VDA) is ***not*** available
- ***Not*** available in Morristown

☆ APFC standard when APC option is selected

Wall Hood Mantle Column

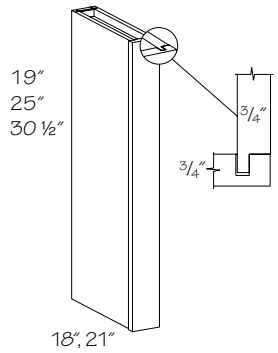

19″ High
WC31819
WC32119
25″ High
WC31825
WC32125
31″ High
WC31831
WC32131

- Front is 3/4″ solid wood
- Quartersawn Oak door styles have 3/4″ solid quartersawn wood front and quartersawn wood veneer end panels
- Painted hardwood supplied for EverCore™
- Plain sawn material supplied for Barnet Crafted door styles
- Finished front and both sides
- Reversible, may be used on either right or left end
- Foil-wrapped MDF supplied for Wood-Grain Foil door styles

☆ APFC standard when APC option is selected

	PE
●	APC
☆	APFC
❖	FPEB
	MI
	DE
	CW
●	RD
●	ID
●	CH
	XS
	XSG
	GD

Wall Hood Mantle Column–Sterling

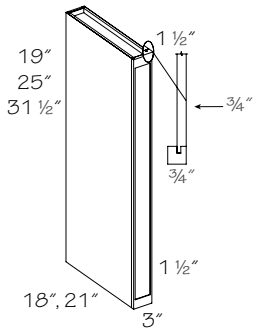

19″ High
STWC31819
STWC32119
25″ High
STWC31825
STWC32125
31 1/2″ High
STWC31831
STWC32131

- Front is 3/4″ solid wood
- Available in Cherry, EverCore™, Maple, Rustic Alder and Wood-Grain Foil door styles only
- Painted hardwood supplied for EverCore™
- Painted hardwood supplied for Wood-Grain Foil door styles; only available in white
- Finished front and both sides
- Reversible, may be used on either right or left end

☆ APFC standard when APC option is selected

	PE
●	APC
☆	APFC
❖	FPEB
	MI
	DE
	CW
●	RD
●	ID
	CH
	XS
	XSG
	GD

New

Wall Hood Cabinet Run - Rosette Corbel

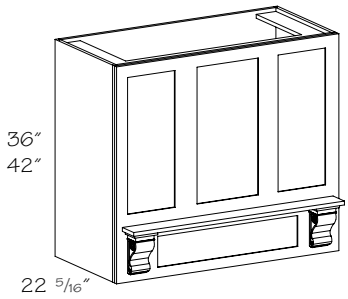

WHCR422236 ▪RC
WHCR482236 ▪RC
WHCR542236 ▪RC
WHCR422242 ▪RC
WHCR482242 ▪RC
WHCR542242 ▪RC

Grey color coding indicates new product, size or code.

- ***Not*** available in mitered door styles, quartersawn door styles, rustic door styles, Evercore™ door styles, slab door styles, and all High-gloss foil, Thermofoil or Wood-Grain foil door styles
- Solid wood/wood veneer construction
- Front panel designed to coordinate with the selected door style
- Check local building codes for required clearances between the Wall Hood and cooking surface
- Requires Wall Hood Component Package "G" or "P", located before the Wall Hood Designs in this section
- Front panel is removable to facilitate duct installation and wiring
- Rosette Corbel design also sold separately
- 36" wide units will have a single panel
- Weight capacity of 10 lbs.
- ***Note:*** Cabinetry and appliances located below these Wall Hoods ***must*** be pulled to a minimum of 27"deep and a maximum of 30" deep for improved function

	PE
❖	APC
	APFC
	FPEB
	MI
	DE
	CW
	RD
	ID
	CH
	XS
	XSG
	GD

Opening Sizes				
Cabinet	**Top Width**	**Top Depth**	**Bottom Width**	**Bottom Depth**
WHCR422236▪RC	32 ½″	18 13/16″	32 ½″	18 13/16″
WHCR482236▪RC	38 ½″	18 13/16″	38 ½″	18 13/16″
WHCR542236▪RC	44 ½″	18 13/16″	44 ½″	18 13/16″
WHCR422242▪RC	32 ½″	18 13/16″	32 ½″	18 13/16″
WHCR482242▪RC	38 ½″	18 13/16″	38 ½″	18 13/16″
WHCR542242▪RC	44 ½″	18 13/16″	44 ½″	18 13/16″

New

Wall Hood Cabinet Run - Sterling Corbel

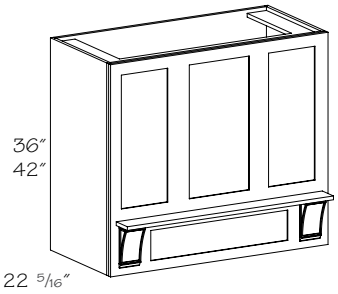

WHCR422236 ▪SC
WHCR482236 ▪SC
WHCR542236 ▪SC
WHCR422242 ▪SC
WHCR482242 ▪SC
WHCR542242 ▪SC

Grey color coding indicates new product, size or code.

- ***Not*** available in mitered door styles, quartersawn door styles, rustic door styles, Evercore™ door styles, slab door styles, and all High-gloss foil, Thermofoil or Wood-Grain foil door styles
- Solid wood/wood veneer construction
- Front panel designed to coordinate with the selected door style
- Check local building codes for required clearances between the Wall Hood and cooking surface
- Requires Wall Hood Component Package "G" or "P", located before the Wall Hood Designs in this section
- Front panel is removable to facilitate duct installation and wiring
- Sterling Corbel design also sold separately
- 36" wide units will have a single panel
- Weight capacity of 10 lbs.
- ***Note:*** Cabinetry and appliances located below these Wall Hoods ***must*** be pulled to a minimum of 27"deep and a maximum of 30" deep for improved function

PE
❖ APC
APFC
FPEB
MI
DE
CW
RD
ID
CH
XS
XSG
GD

Opening Sizes				
Cabinet	Top Width	Top Depth	Bottom Width	Bottom Depth
WHCR422236•SC	32 ½"	18 13/16"	32 ½"	18 13/16"
WHCR482236•SC	38 ½"	18 13/16"	38 ½"	18 13/16"
WHCR542236•SC	44 ½"	18 13/16"	44 ½"	18 13/16"
WHCR422242•SC	32 ½"	18 13/16"	32 ½"	18 13/16"
WHCR482242•SC	38 ½"	18 13/16"	38 ½"	18 13/16"
WHCR542242•SC	44 ½"	18 13/16"	44 ½"	18 13/16"

New

Wall Hood Cabinet Run - Transitional Corbel

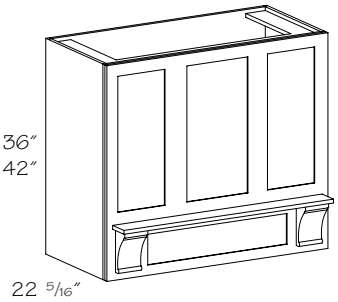

WHCR422236 ▪TRC
WHCR482236 ▪TRC
WHCR542236 ▪TRC
WHCR422242 ▪TRC
WHCR482242 ▪TRC
WHCR542242 ▪TRC

Grey color coding indicates new product, size or code.

- ***Not*** available in mitered door styles, quartersawn door styles, rustic door styles, Evercore™ door styles, slab door styles, and all High-gloss foil, Thermofoil or Wood-Grain foil door styles
- Solid wood/wood veneer construction
- Front panel designed to coordinate with the selected door style
- Check local building codes for required clearances between the Wall Hood and cooking surface
- Requires Wall Hood Component Package "G" or "P", located before the Wall Hood Designs in this section
- Front panel is removable to facilitate duct installation and wiring
- Transitional Corbel design also sold separately
- 36" wide units will have a single panel
- Weight capacity of 10 lbs.
- ***Note:*** Cabinetry and appliances located below these Wall Hoods ***must*** be pulled to a minimum of 27"deep and a maximum of 30" deep for improved function

PE
❖ APC
APFC
FPEB
MI
DE
CW
RD
ID
CH
XS
XSG
GD

Opening Sizes				
Cabinet	Top Width	Top Depth	Bottom Width	Bottom Depth
WHCR422236•TRC	32 ½"	18 13/16"	32 ½"	18 13/16"
WHCR482236•TRC	38 ½"	18 13/16"	38 ½"	18 13/16"
WHCR542236•TRC	44 ½"	18 13/16"	44 ½"	18 13/16"
WHCR422242•TRC	32 ½"	18 13/16"	32 ½"	18 13/16"
WHCR482242•TRC	38 ½"	18 13/16"	38 ½"	18 13/16"
WHCR542242•TRC	44 ½"	18 13/16"	44 ½"	18 13/16"

Wall Hood Cabinet Run - Shelf w/Classic Crown Molding

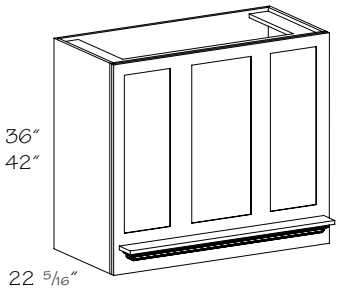

WHCR362230 •CCM
WHCR422230 •CCM
WHCR482230 •CCM
WHCR542230 •CCM
WHCR362236 •CCM
WHCR422236 •CCM
WHCR482236 •CCM
WHCR542236 •CCM
WHCR362242 •CCM
WHCR422242 •CCM
WHCR482242 •CCM
WHCR542242 •CCM

Grey color coding indicates new product, size or code.

PE
❖ APC
APFC
FPEB
MI
DE
CW
RD
ID
CH
XS
XSG
GD

- ***Not*** available in mitered door styles, quartersawn door styles, rustic door styles, Evercore™ door styles, slab door styles, and all High-gloss foil, Thermofoil or Wood-Grain foil door styles
- Solid wood/wood veneer construction
- Front panel designed to coordinate with the selected door style
- Check local building codes for required clearances between the Wall Hood and cooking surface
- Requires Wall Hood Component Package "G" or "P", located before the Wall Hood Designs in this section
- Front panel is removable to facilitate duct installation and wiring
- Shelf molding matches Classic Crown Molding (CCM8)
- 36" wide units will have a single panel
- Weight capacity of 10 lbs.
- ***Note:*** Cabinetry and appliances located below these Wall Hoods ***must*** be pulled to a minimum of 27"deep and a maximum of 30" deep for improved function

Opening Sizes				
Cabinet	**Top Width**	**Top Depth**	**Bottom Width**	**Bottom Depth**
WHCR362230•CCM	26 ½"	18 13/16"	26 ½"	18 13/16"
WHCR422230•CCM	32 ½"	18 13/16"	32 ½"	18 13/16"
WHCR482230•CCM	38 ½"	18 13/16"	38 ½"	18 13/16"
WHCR542230•CCM	44 ½"	18 13/16"	44 ½"	18 13/16"
WHCR362236•CCM	26 ½"	18 13/16"	26 ½"	18 13/16"
WHCR422236•CCM	32 ½"	18 13/16"	32 ½"	18 13/16"
WHCR482236•CCM	38 ½"	18 13/16"	38 ½"	18 13/16"
WHCR542236•CCM	44 ½"	18 13/16"	44 ½"	18 13/16"
WHCR362242•CCM	26 ½"	18 13/16"	26 ½"	18 13/16"
WHCR422242•CCM	32 ½"	18 13/16"	32 ½"	18 13/16"
WHCR482242•CCM	38 ½"	18 13/16"	38 ½"	18 13/16"
WHCR542242•CCM	44 ½"	18 13/16"	44 ½"	18 13/16"

Wall Hood Cabinet Run - Shelf w/Extra Large Cove Molding

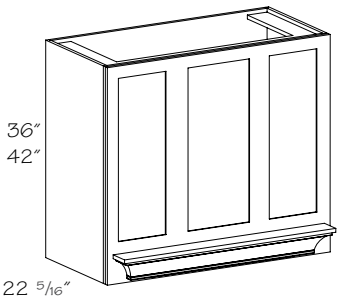

WHCR362230 •XLCVM
WHCR422230 •XLCVM
WHCR482230 •XLCVM
WHCR542230 •XLCVM
WHCR362236 •XLCVM
WHCR422236 •XLCVM
WHCR482236 •XLCVM
WHCR542236 •XLCVM
WHCR362242 •XLCVM
WHCR422242 •XLCVM
WHCR482242 •XLCVM
WHCR542242 •XLCVM

Grey color coding indicates new product, size or code.

PE
❖ APC
APFC
FPEB
MI
DE
CW
RD
ID
CH
XS
XSG
GD

- ***Not*** available in mitered door styles, quartersawn door styles, rustic door styles, Evercore™ door styles, slab door styles, and all High-gloss foil, Thermofoil or Wood-Grain foil door styles
- Solid wood/wood veneer construction
- Front panel designed to coordinate with the selected door style
- Check local building codes for required clearances between the Wall Hood and cooking surface
- Requires Wall Hood Component Package "G" or "P", located before the Wall Hood Designs in this section
- Front panel is removable to facilitate duct installation and wiring
- Shelf molding matches Extra Large Cove Molding (XLCVM8)
- 36" wide units will have a single panel
- Weight capacity of 10 lbs.
- ***Note:*** Cabinetry and appliances located below these Wall Hoods ***must*** be pulled to a minimum of 27"deep and a maximum of 30" deep for improved function

Opening Sizes				
Cabinet	**Top Width**	**Top Depth**	**Bottom Width**	**Bottom Depth**
WHCR362230•XLCVM	26 ½"	18 13/16"	26 ½"	18 13/16"
WHCR422230•XLCVM	32 ½"	18 13/16"	32 ½"	18 13/16"
WHCR482230•XLCVM	38 ½"	18 13/16"	38 ½"	18 13/16"
WHCR542230•XLCVM	44 ½"	18 13/16"	44 ½"	18 13/16"
WHCR362236•XLCVM	26 ½"	18 13/16"	26 ½"	18 13/16"
WHCR422236•XLCVM	32 ½"	18 13/16"	32 ½"	18 13/16"
WHCR482236•XLCVM	38 ½"	18 13/16"	38 ½"	18 13/16"
WHCR542236•XLCVM	44 ½"	18 13/16"	44 ½"	18 13/16"
WHCR362242•XLCVM	26 ½"	18 13/16"	26 ½"	18 13/16"
WHCR422242•XLCVM	32 ½"	18 13/16"	32 ½"	18 13/16"
WHCR482242•XLCVM	38 ½"	18 13/16"	38 ½"	18 13/16"
WHCR542242•XLCVM	44 ½"	18 13/16"	44 ½"	18 13/16"

Wall Hood Component Package (A, B & C)–Recirculating

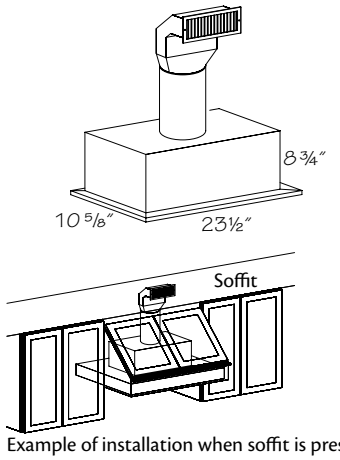

Example of installation when soffit is present

Package "A"

RHCP30 R ▪SN

RHCP36 R ▪SN

Package "B"

CRHCP30 R ▪SN

CRHCP36 R ▪SN

Package "C"

PRHCP30 R ▪SN

PRHCP36 R ▪SN

- This unit includes a satin nickel colored metal liner, and an easy to clean aluminum mesh filter. This is powered by a 390 CFM squirrel cage fan and has push button controls. This unit comes with two feet of 7" round ductwork, a 90° elbow, charcoal filter and grille with white vent
- Requires a 50 watt, 120 volt halogen lamp (MR16 GU10 base) which are available at hardware or lighting retailers

Wall Hood Component Package (D, E & F)–Vented

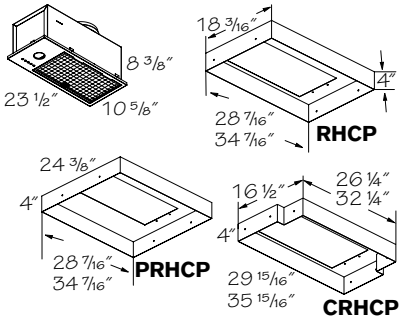

Package "D"

RHCP30 V ▪SN Satin Nickel

RHCP36 V ▪SN Satin Nickel

Package "E"

CRHCP30 V ▪SN Satin Nickel

CRHCP36 V ▪SN Satin Nickel

Package "F"

PRHCP30 V ▪SN Satin Nickel

PRHCP36 V ▪SN Satin Nickel

- This unit includes metal liner, and an easy to clean aluminum mesh filter. This is powered by a 390 CFM squirrel cage fan and has push button controls. 7" round duct vents on top
- Requires a 50 watt, 120 volt halogen lamp (MR16 GU10 base) which are available at hardware or lighting retailers

Wall Hood Component Package (G, H & I)–Vented

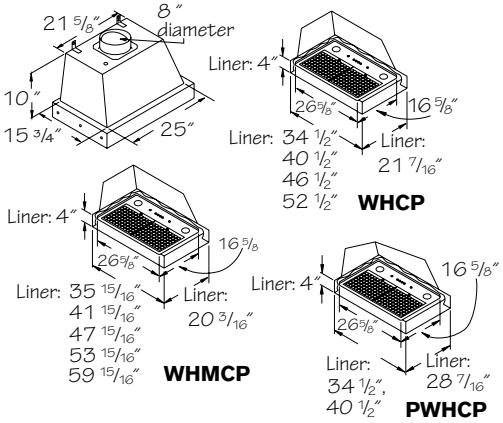

Package "G"

WHCP3624 V

WHCP4224 V

WHCP4824 V

WHCP5424 V

Package "H"

PWHCP3633 V

PWHCP4233 V

Package "I"

WHMCP3621 V

WHMCP4221 V

WHMCP4821 V

WHMCP5421 V

WHMCP6021 V

- This unit is used for ducted to exterior installation
- Powered by a 660 CFM 3-speed squirrel cage fan with push button controls
- Requires two 50 watt, 120 volt halogen light bulbs (MR16 GU10 base) which are available at hardware or lighting retailers
- Easy to clean aluminum mesh filter
- Includes stainless steel liner
- Interior of stainless liner is clear, powder coated
- Front panel of blower is covered with a removable protective peel-coat to prevent scratching
- ***Not*** available in Morristown

Wall Hood Component Package (J, K & L)–Vented

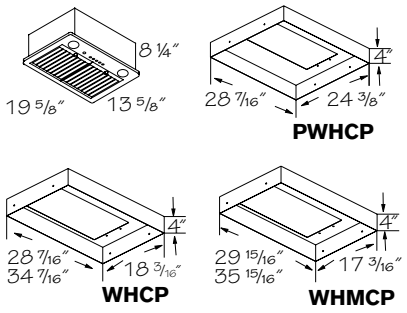

Package "J"

WHCP3019 V

WHCP3619 V

Package "K"

PWHCP3028 V

Package "L"

WHMCP3018 V

WHMCP3618 V

- This unit is used for ducted to exterior installation
- Powered by a 390 CFM squirrel cage fan and has push button controls
- Easy to clean aluminum mesh filter
- Includes stainless steel liner
- Interior of stainless liner is clear, powder coated
- 7″ round duct
- Requires two 50 watt, 120 volt halogen light bulbs (MR16 GU10 base) which are available at hardware or lighting retailers
- Front panel of blower is covered with a removable protective peel-coat to prevent scratching
- ***Not*** available in Morristown

Wall Hood Component Package (O, P, Q)–Vented

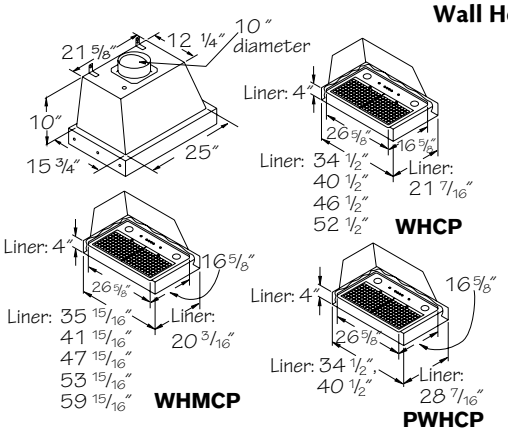

Package "O"

PWHCP3633 V•2
PWHCP4233 V•2

Package "P"

WHCP3624 V•2
WHCP4224 V•2
WHCP4824 V•2
WHCP5424 V•2

Package "Q"

WHMCP3621 V•2
WHMCP4221 V•2
WHMCP4821 V•2
WHMCP5421 V•2
WHMCP6021 V•2

- This unit is used for ducted to exterior installation
- 10" round duct vents on top
- Powered by a 980 CFM 3-speed squirrel cage fan and has push button controls
- Requires two 50 watt, 120 volt halogen light bulbs (MR16 GU10 base) which are available at hardware or lighting retailers
- Easy to clean aluminum mesh filter
- Interior of stainless liner is clear, powder coated
- Front panel of blower is covered with a protective white vinyl to prevent scratching

New

Wall Hood Component Package (R)-Vented

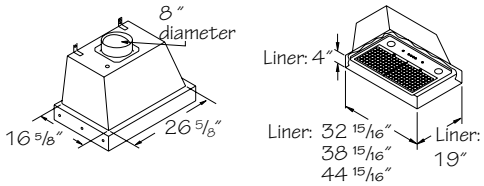

WHCP4222 V
WHCP4822 V
WHCP5422 V

Grey color coding indicates new product, size or code.

- This unit is used for ducted to exterior installation
- 42, 48 and 54 powered by a 660 CFM squirrel cage fan and has push button controls
- Easy to clean aluminum mesh filter
- Includes stainless steel liner
- Interior of stainless liner is clear, powder coated
- 8" round duct vents on top
- Requires two 50 watt, 120 volt halogen light bulbs (MR16 GU10 base) which are available at hardware or lighting retailers
- Front panel of blower is covered with a removable protective peel-coat to prevent scratching

New

Wall Hood Component Package (S)-Vented

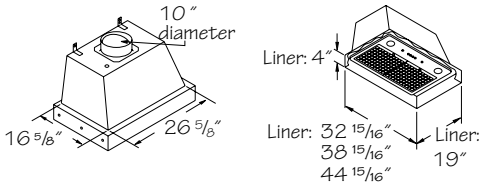

WHCP4222 V•2
WHCP4822 V•2
WHCP5422 V•2

Grey color coding indicates new product, size or code.

- This unit is used for ducted to exterior installation
- Powered by a 980 CFM squirrel cage fan and has push button controls
- Easy to clean aluminum mesh filter
- Includes stainless steel liner
- Interior of stainless liner is clear, powder coated
- 10" round duct vents on top
- Requires two 50 watt, 120 volt halogen light bulbs (MR16 GU10 base) which are available at hardware or lighting retailers
- Front panel of blower is covered with a removable protective peel-coat to prevent scratching

New

Wall Hood Component Package (T)-Vented

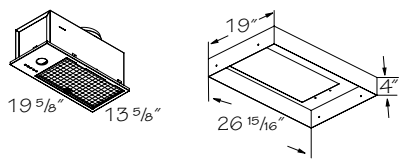

WHCP3622 V

Grey color coding indicates new product, size or code.

- This unit is used for ducted to exterior installation
- Powered by a 390 CFM squirrel cage fan and has push button controls
- Easy to clean aluminum mesh filter
- Includes stainless steel liner
- Interior of stainless liner is clear, powder coated
- 7" round duct vents on top
- Requires two 50 watt, 120 volt halogen light bulbs (MR16 GU10 base) which are available at hardware or lighting retailers
- Front panel of blower is covered with a removable protective peel-coat to prevent scratching

Wall Hood Design Idea 1

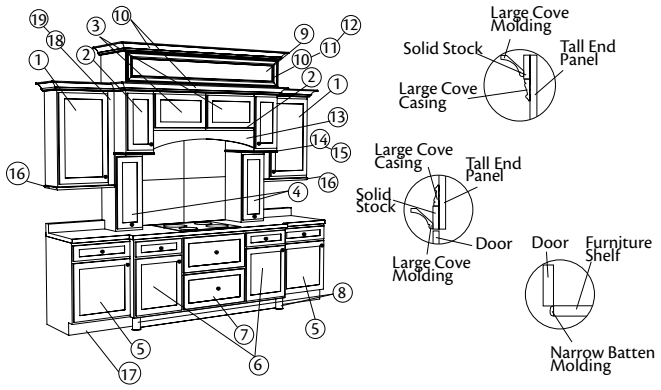

1. Wall Cabinets
2. Wall Cabinets (Increased Depth to 21″; with Furniture Plywood Ends)
3. Wall Top Hinge Cabinets
4. Wall Pantry Pull-out (with Furniture Plywood Ends)
5. Base Cabinets
6. Base Cabinet (pulled to 27″; with Furniture Plywood Ends; Void Toe Kick)
7. Base Pots and Pans Storage (pulled to 27″; Scoop Top Drawer; Void Toe Kick)
8. Aluminum Round Legs
9. Wood Tall End Panel (cut to build box)
10. Large Cove Molding
11. Large Cove Casing
12. Solid Stock
13. Valance–Cove
14. Furniture Shelves
15. Narrow Batten Molding (applied to exposed edges)
16. Cove Light Rail
17. Toe Kick Material
18. Wall Filler
19. Wall Filler Overlay

Wall Hood Design Idea 2

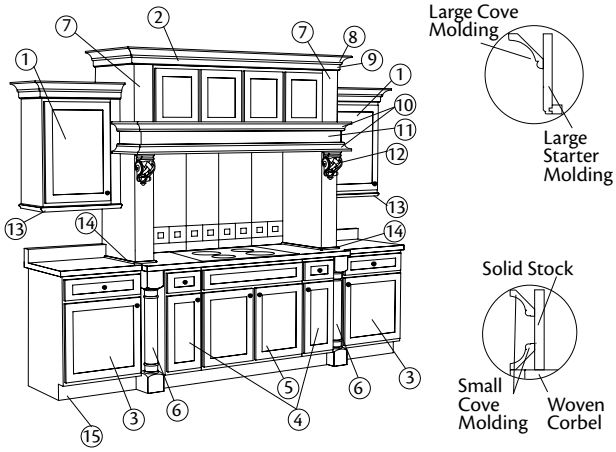

1. Wall Cabinets (with Integrated Extended Stile
2. Wall Hood Mantle Matching
3. Base Cabinets
4. Base Cabinets (pulled to 27″; with Furniture Plywood Ends)
5. Range Base 27″ D
6. Roman Spindle with filler behind
7. Tall Column
8. Large Cove Molding
9. Large Starter Molding
10. Small Cove Molding
11. Solid Stock
12. Woven Corbel
13. Small Cove Light Rail
14. Ogee Edging
15. Toe Kick Material

Wall Hood Design Idea 3

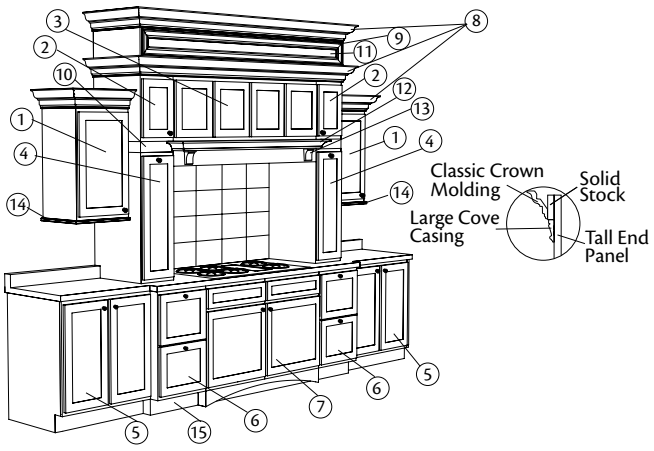

1. Wall Cabinets (ID to 15)
2. Wall Cabinet (ID to 21″; with Furniture Plywood Ends)
3. Wall Hood Mantle Matching
4. Wall Pantry Pull-out (pulled to 21″; skin sides)
5. Base Cabinets
6. Base Pots & Pans Storage (with Furniture Plywood Ends; pull to 27″)
7. Range Base 27″D (Wide Rail Cove; with Furniture Plywood Ends)
8. Classic Crown Molding
9. Large Cove Casing
10. Solid Stock
11. Tall End Panel (cut to build box)
12. Large Cove Molding
13. Cove Corbel
14. Single Bead Pilaster
15. Toe Kick Material

Wall Specialty Cabinets

WMSP	36	36
code	width	height

Material dimensions listed may vary slightly from actual dimensions of the product.

Specifications subject to change without notice.

Construction Options and Modifications

- ❖ Included as standard
- ● Available with an upcharge
- ☆ Available with exceptions
- (Blank) ***Not*** available

PE	Plywood Ends
APC	All Plywood Construction
APFC	All Plywood Furniture Construction
FPEB	Furniture Plywood Ends
MI	Matching Interior
DE	Integrated Decorative End
AD_E	Attached Decorative End
CW	Change Width
RD	Reduced Depth
ID	Increased Depth
CH	Change Height
TWR	Top Wide Rail
XS	Extended Stile
GD	Glass Doors

Wall Appliance Garage

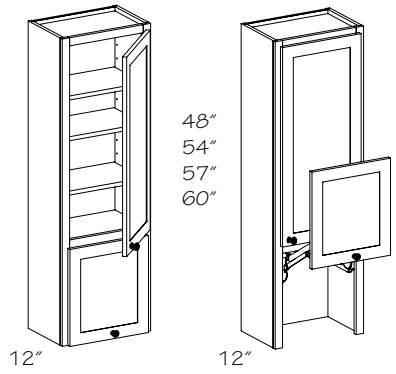

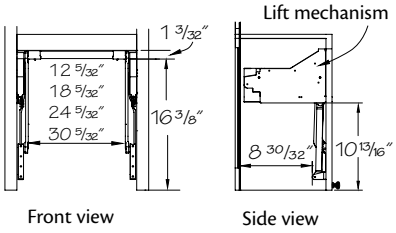

Specify R or L
Two shelves
48″ High
WAG181248 R or L
WAG241248 R or L
WAG241248 BUTT
WAG301248
WAG361248

Three shelves
54″ High
WAG181254 R or L
WAG241254 R or L
WAG241254 BUTT
WAG301254
WAG361254

57″ High
+ **WAG181257 R or L**
+ **WAG241257 R or L**
+ **WAG241257 BUTT**
+ **WAG301257**
+ **WAG361257**

60″ High
+ **WAG181260 R or L**
+ **WAG241260 R or L**
+ **WAG241260 BUTT**
+ **WAG301260**
+ **WAG361260**

+ Attached Decorative Ends (AD_E) option ***not*** available

- Adjustable shelves
- Clearance from countertop to bottom of door is 20 1/32″
- Adjustable Soft-Close lift mechanism standard
- Void All Door and Drawer Front option (VDA) is ***not*** available
- Bottom door is always square

☆ Glass doors available for top doors only
☆ Maximum Increased Depth (ID) is 24″

●	PE
●	APC
●	APFC
●	FPEB
●	MI
●	DE
☆	AD_E
	CW
	RD
☆	ID
●	CH
	TWR
●	XS
☆	GD

Door Storage

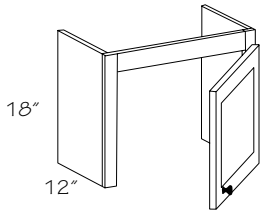

Specify R or L
DOS18 R or L
DOS21 R or L
❍ **DOS24 BUTT**

❍ Change Width (CW) option ***not*** available

- ***Not*** trimmable
- ***Note:*** Square doors will be supplied when ordered in arched door styles

●	PE
●	APC
●	APFC
●	FPEB
●	MI
●	DE
	AD_E
☆	CW
●	RD
●	ID
	CH
	TWR
●	XS
●	GD

Door Storage Angle

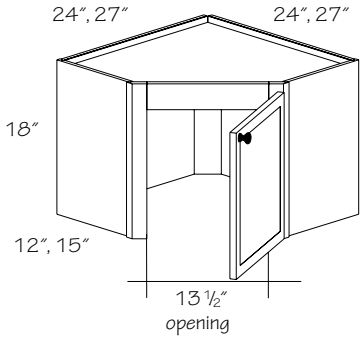

Specify R or L

DOSA2418 R or L

☆❄**DOSA2718 R or L**

☆ Furniture Plywood Ends (FPEB) standard; recommended Matching Interior option is MIFP

❄ Flush Finished Ends standard

- Access height is 15″
- ***Not*** trimmable
- ***Note:*** Square doors will be supplied when ordered in arched door styles
- ***Note:*** Full overlay door styles use a 1/2″ overlay hinge

●	PE
●	APC
●	APFC
☆	FPEB
●	MI
	DE
	AD_E
	CW
	RD
	ID
	CH
	TWR
	XS
●	GD

Under Cabinet Door Storage

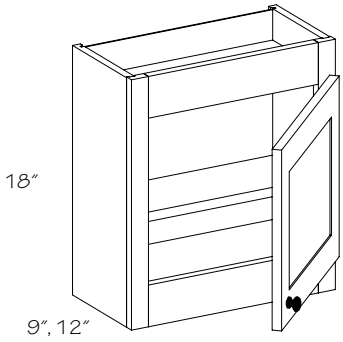

Specify R or L

UCDS150918 R or L
UCDS180918 R or L
UCDS210918 R or L
UCDS151218 R or L
UCDS181218 R or L
UCDS211218 R or L

- One adjustable shelf
- Top and bottom rails are 3″ high allowing for molding application
- Refer to the appliance manufacturer's specifications for clearance between the Under Cabinet Storage cabinets and the cooking surface for residential applications
- Consult your local building code to determine the amount of space required between the cooking surface and the Under Cabinet Storage cabinets for commercial applications
- If ordered in an arched door style, it will be supplied square
- Thermofoils are painted hardwood
- ***Not*** available in Morristown

☆ APFC standard when APC option is selected

	PE
●	APC
☆	APFC
❖	FPEB
●	MI
	DE
	AD_E
	CW
●	RD
	ID
	CH
	TWR
	XS
●	GD

Drawer Storage Cabinet

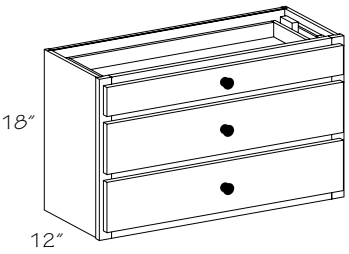

DS15
DS18
DS21
DS24
DS27
DS30

- Three drawers with full extension side-mount runners
- Top drawer will be slab, including DRPD, except LaSalle, Lyndale-Full and Mandolay door styles which will be five-piece

●	PE
●	APC
●	APFC
●	FPEB
	MI
●	DE
	AD_E
●	CW
	RD
	ID
	CH
	TWR
●	XS
	GD

Drawer Storage Angle

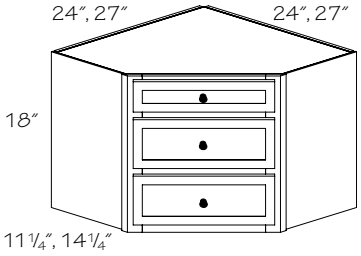

DSA2418

☆ **DSA2718**

☆ Furniture plywood ends (FPEB) standard

- Three drawers with full extension side-mount runners
- Top drawer will be slab, including DRPD, except LaSalle, Lyndale-Full and Mandolay door styles which will be five-piece

When including any under cabinet storage unit, consider using a countertop with a loose backsplash. This will prevent having to notch the cabinet.

●	PE
●	APC
●	APFC
☆	FPEB
	MI
	DE
	AD_E
	CW
	RD
	ID
	CH
	TWR
	XS
	GD

Tambour Storage 18" H

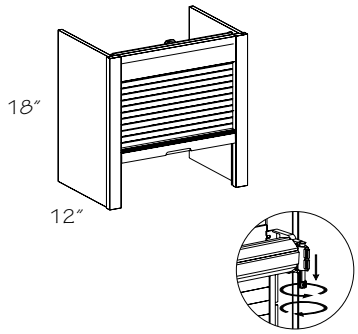

TS18
TS21
TS24
TS27
TS30
TS33
TS36

- Tambour opens to allow 13 1/2" access height
- Tambour tension controlled with thumb screw adjustment
- Painted hardwood supplied for EverCore™
- ***Not*** available in High-Gloss Foil or Wood-Grain Foil door styles
- ***Not*** available in Morristown; Melrose and Putnam supplied plain sawn

●	PE
●	APC
●	APFC
●	FPEB
●	MI
●	DE
	AD_E
	CW
●	RD
●	ID
	CH
	TWR
●	XS
	GD

Tambour Storage Angle

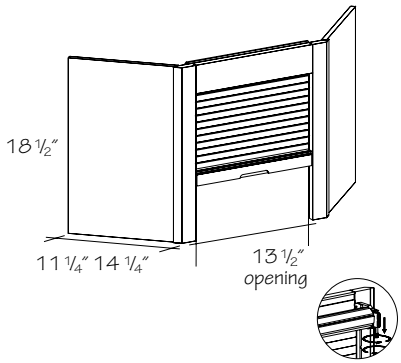

TSA2418
☆ **TSA2718**
☆ Furniture Plywood Ends (FPEB) standard; recommended Matching Interior option is MIFP

- Tambour opens to allow 14" access height
- Tambour tension controlled with thumb screw adjustment
- This unit is shipped with the sides at 90° to the face frame
- Painted hardwood supplied for EverCore™
- Stained Oak supplied for Cannon Grey Wood-Grain Foil; Painted Maple supplied for Dove White Wood-Grain Foil
- Painted Maple (non-gloss) will be supplied for High-Gloss Foils
- ***Not*** available in Morristown; Melrose and Putnam supplied plain sawn
- Installation ***Note:*** These units may be installed flush with the face frame of a wall angle (WA) cabinet by trimming the height

●	PE
●	APC
●	APFC
☆	FPEB
●	MI
	DE
	AD_E
	CW
	RD
	ID
	CH
	TWR
	XS
	GD

Wall Lateral Bi-Fold Cabinet

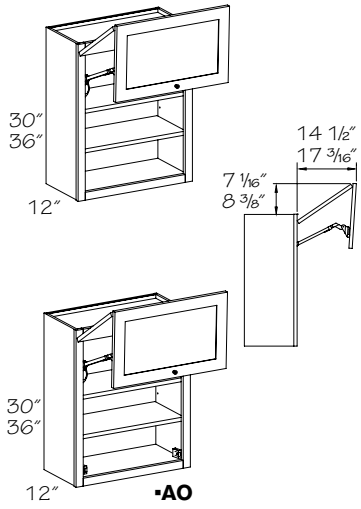

Two shelves
30" High
WLBF2430
WLBF3030
WLBF3630

Three shelves
36" High
WLBF2436
WLBF3036
WLBF3636

With Auto-open Kit
Two shelves
30" High
WLBF2430 ▪AO
WLBF3030 ▪AO
WLBF3630 ▪AO

Three shelves
36" High
WLBF2436 ▪AO
WLBF3036 ▪AO
WLBF3636 ▪AO

- Adjustable shelves
- Adjustable Soft-Close lift mechanism standard
- With the Auto-open Kit (AO), pressing lower corners of cabinet door triggers auto-open. Pressing a button on activator switch triggers auto-close. Doors can be operated manually if desired. Multiple units can also be synced to open and close simultaneously with the push of one button
- Breakaway hinge engages or separates, when an object is caught between the doors as they are closing
- Door-to-door hinge will show slightly when glass doors are applied
- Available in full overlay door styles only
- Allow 8 11/16″ above the cabinet for proper door clearance
- Auto-open Kit (AO) requires 110V power source at back of cabinet
- Auto-open Kit (AO) feature offers programmable stop
- Permaset bumpers are ***not*** included on doors ordered with the Auto-open Kit (AO)
- ☆ ***Not*** available with Mullion glass doors (GD) option
- ☆ ***Not*** available with Camed glass door (GD) option
- ☆ Prep for Glass (DRS▪PREP) ***not*** available
- ☆ ***Not*** available with Crossroads (CRO), Modern Textured (MRT) and Moire (MOI) Glass Inserts
- ☆ Antiquity Glass Insert (ATQ) ***not*** available on 36″ wide cabinet
- ***Note:*** Auto-open Kit (AO) requires field installation
- ***Note:*** Square doors will be supplied when ordered in arched door styles

●	PE
●	APC
●	APFC
●	FPEB
●	MI
	DE
●	AD_E
	CW
	RD
●	ID
	CH
	TWR
	XS
☆	GD

Any wall cabinet over 24″ wide or 30″ high or higher with a depth greater than 12″ and/or with butt doors ***must*** be installed between two (2) cabinets, a cabinet and a wall or supported from below

Wall Pantry Pull-out

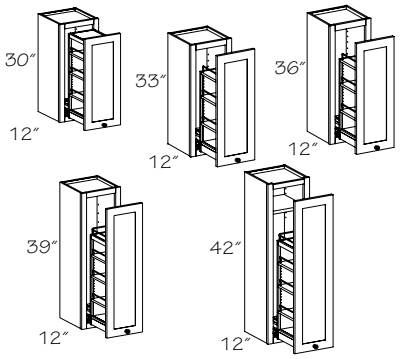

30″ High
❄ **WPP930**
WPP1230

33″ High
❄ **WPP933**
WPP1233

36″ High
❄ **WPP936**
WPP1236

39″ High
❄ **WPP939**
WPP1239

42″ High
✛❄ **WPP942**
✛ **WPP1242**

- Three adjustable shelves
- Shelves have solid wood floor with chrome wire side rails
- Shelves are 9 1/2″ deep
- Shelf widths are 4 1/4″ or 7 1/8″
- Unit slides on full extension side-mount runners

❄ Doors are square except full overlay arch door styles. Thermofoil door styles will always be square. Vanderbilt doors will have a solid, recessed flat panel

✛ One adjustable shelf above pull-out

●	PE
●	APC
●	APFC
●	FPEB
●	MI
●	DE
●	AD_E
	CW
	RD
	ID
	CH
	TWR
●	XS
	GD

Wall Pantry Pull-out Stack

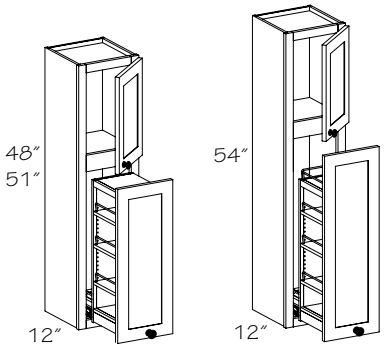

Specify R or L
48″ High
❄✛ **WPPST948 R or L**
WPPST1248 R or L

51″ High
❄✛ **WPPST951 R or L**
WPPST1251 R or L

54″ High
❄✛ **WPPST954 R or L**
WPPST1254 R or L

- Two vertical compartments with fixed rail and floor
- Bottom door is always square

☆ Glass doors available for top doors only

Any wall cabinet over 24″ wide or 30″ high or higher with a depth greater than 12″ and/or with butt doors ***must*** be installed between two (2) cabinets, a cabinet and a wall or supported from below

❄ Doors are square except full overlay arch door styles. Thermofoil door styles will always be square. Vanderbilt doors will have a solid, recessed flat panel

✛ Glass door option ***not*** available

●	PE
●	APC
●	APFC
●	FPEB
	MI
●	DE
●	AD_E
	CW
	RD
	ID
	CH
	TWR
	XS
☆	GD

Wall Multi-Storage Pantry

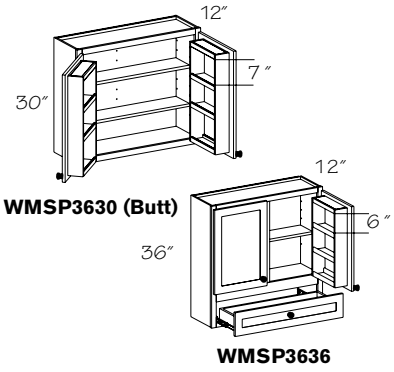

WMSP3630 (Butt)
❄ **WMSP3636**

❄ Full extension side-mount drawer glides; Mullion strip attached to left door

- Adjustable 7 1/8″ deep shelves
- Two 4″ deep door storage racks with three fixed shelves
- ***Must*** be installed between two cabinets or a cabinet and wall with supplied connectors
- ***Not*** available with knife hinge door option

●	PE
●	APC
●	APFC
●	FPEB
●	MI
	DE
●	AD_E
	CW
	RD
	ID
	CH
●	TWR
●	XS
	GD

Wall Cabinet w/Spice Rack

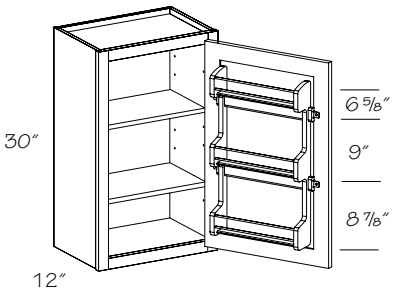

Specify R or L
W1530 R or L•SR
W1830 R or L•SR
W2130 R or L•SR

- Right shown
- Two standard depth adjustable shelves
- Spice rack is 3 1/8″ deep, rack shelf is 2 1/8″ deep

●	PE
●	APC
●	APFC
●	FPEB
●	MI
●	DE
	AD_E
	CW
●	RD
●	ID
	CH
●	TWR
●	XS
	GD

Wall Reverse-A-Shelf

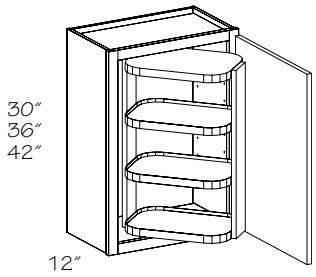

Specify R or L *Three shelves*	*Shelf clearance top to bottom*
W2130 R or L-RS	6 1/6" – 7 1/16" – 6 11/16"
W2136 R or L-RS	8 1/8" – 9 1/16" – 8 11/16"
Four shelves	
W2142 R or L-RS	7 3/16" – 8" – 8" – 7 5/8"

- Right shown
- Shelf assembly pivots 180° for full shelf access
- Vinyl laminated shelves with wood grain T-molding
- Contrasting Back Options (CBEB, CPLB, CVGR) ***not*** available
- ***Note:*** Cabinet is ***not*** reversible

●	PE
●	APC
●	APFC
●	FPEB
	MI
●	DE
●	AD_E
	CW
	RD
	ID
	CH
	TWR
●	XS
●	GD

We recommend using Under Cabinet Panels (UCP) on all wall cabinet runs. This will give the kitchen an elegant finished look. Unless ordered with a matching wood veneer interior option, the under side of wall cabinets are a natural birch material.

Spice Drawer Cabinet

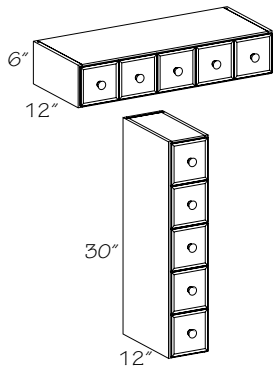

Horizontal

SDC18 3 Drawers
SDC24 4 Drawers
SDC30 5 Drawers
SDC36 6 Drawers
SDC42 7 Drawers

Vertical

VSDC6 5 Drawers

- 5/8" wood veneer construction on horizontal cabinets; vertical cabinets have 1/2" Plywood Ends (PE) standard; not available in plywood
- Drawer boxes have 1/2" sides and 3/4" floor, front and back
- Interior drawer depth 10 1/16"
- Solid wood 1/2" thick slab drawer fronts with a radius edge. Outside profile will ***not*** match the selected door style
- Drawer front is adjustable
- All drawer boxes are Natural Birch wood veneer plywood
- Drawer box slides along wood guide. Wood guide is used to keep drawers from moving left to right
- Vinyl edge banding applied to edges of cabinet
- Matching wood knobs included, ***not*** installed
- Replacement knobs available—use the following order codes: 161 for Birch and Maple; 171 for Cherry; 181 for Oak and Hickory; 191 for Alder; 634 for Thermofoils. See Decorative Hardware section of this book for description
- ***Not*** available in High-Gloss Foil or Wood-Grain Foil door styles
- ***Not*** available in Morristown; Melrose and Putnam supplied plain sawn
- ***Note:*** This cabinet features "frameless" type construction

☆	PE
	APC
	APFC
	FPEB
❖	MI
	DE
	AD_E
	CW
	RD
	ID
	CH
	TWR
	XS
	GD

When using an Organizer (O—) Cabinet or Spice Drawer Cabinet (SDC), which have flush ends standard, under a wall cabinet at the end of a run, either attach Furniture Ends (FE) or order a 3/16" Wood Skin (WSK) for the wall cabinet to flush the ends. (There will be a seam.) Also, consider ordering a furniture matching wall end panel if the height of the finished product allows it. For an alternative, see our Organizer Wall Cabinet in the Office Cabinet section.

Wall Wine Rack Cabinet

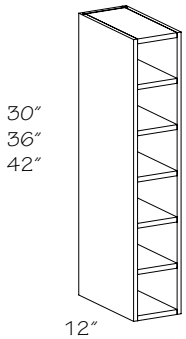

WWR630 5 shelves
WWR636 6 shelves
WWR642 7 shelves

- 1/2" plywood ends
- Crafted or Quartersawn door styles will be supplied in plain sawn wood
- Painted hardwood supplied for EverCore™
- Vinyl edge banding applied to edges of cabinet
- Recommended installation is between two cabinets
- Intended for vertical installation only
- Contrasting Back Options (CBEB, CPLB, CVGR) ***not*** available
- ☆ Reduced Depth (RD) ***not*** available in Foil door styles
- ***Note:*** This cabinet features "frameless" type construction

❖	PE
	APC
	APFC
	FPEB
❖	MI
	DE
	AD_E
	CW
☆	RD
	ID
	CH
	TWR
	XS
	GD

Organizers

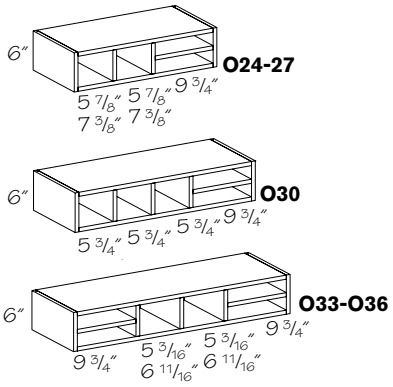

O24
O27
O30
O33
O36

- 5/8" wood veneer construction; not available in plywood
- Crafted or Quartersawn door styles will be supplied in plain sawn wood
- Painted hardwood supplied for EverCore™
- Vinyl edge banding applied to edges of cabinet
- Contrasting Back Options (CBEB, CPLB, CVGR) ***not*** available
- ***Note:*** This cabinet features "frameless" type construction

PE
APC
APFC
FPEB
❖ MI
DE
AD_E
CW
RD
ID
CH
TWR
XS
GD

When using an Organizer (O—) Cabinet or Spice Drawer Cabinet (SDC), which have flush ends standard, under a wall cabinet at the end of a run, either attach Furniture Ends (FE) or order a 3/16" Wood Skin (WSK) for the wall cabinet to flush the ends. (There will be a seam.) Also, consider ordering a furniture matching wall end panel if the height of the finished product allows it. For an alternative, see our Organizer Wall Cabinet in the Office Cabinet section.

Wall Filler Pull-out

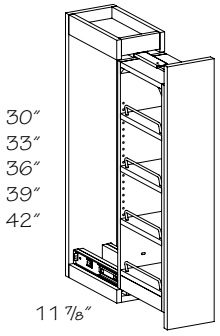

Install decorative hardware prior to attaching filler to pull-out unit

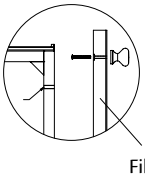

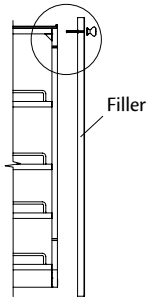

Side View

Three adjustable shelves
30" High
WFP3•30 2 1/8" shelf width
WFP6•30 5 1/8" shelf width
33" High
WFP3•33 2 1/8" shelf width
WFP6•33 5 1/8" shelf width
Four adjustable shelves
36" High
WFP3•36 2 1/8" shelf width
WFP6•36 5 1/8" shelf width
39" High
WFP3•39 2 1/8" shelf width
WFP6•39 5 1/8" shelf width
Five adjustable shelves
42" High
WFP3•42 2 1/8" shelf width
WFP6•42 5 1/8" shelf width

- Crafted or Quartersawn door styles will be supplied in plain sawn wood
- Painted hardwood supplied for EverCore™
- Painted or Stained hardwood supplied for Wood-Grain Foil door styles
- Unit slides on full extension side-mount runners
- Recommended installation is between two cabinets
- Installation may also be made between a cabinet and a wall or a cabinet and an end panel with stile
- Filler is included, but unattached. Unit should be installed before removing shipping brace and attaching filler
- A filler overlay is recommended for full overlay door styles; ***must*** be ordered separately

PE
APC
APFC
FPEB
MI
DE
AD_E
CW
RD
ID
CH
TWR
XS
GD

Do ***not*** use filler pullouts (WFP, BFP, BSPP) at the end of cabinet runs or next to appliances. They ***must*** be installed between two cabinets or a cabinet and an end panel.

Wall Accessories

PCWFC	3	15	24
code	width	depth	height

Material dimensions listed may vary slightly from actual dimensions of the product.

Specifications subject to change without notice.

Construction Options and Modifications

❖	Included as standard
●	Available with an upcharge
☆	Available with exceptions
(Blank)	***Not*** available

PE	Plywood Ends
APC	All Plywood Construction
APFC	All Plywood Furniture Construction
FPEB	Furniture Plywood Ends
MI	Matching Interior
CW	Change Width
RD	Reduced Depth
ID	Increased Depth
CH	Change Height
XS	Extended Stile
GD	Glass Doors

Under Cabinet Shelf

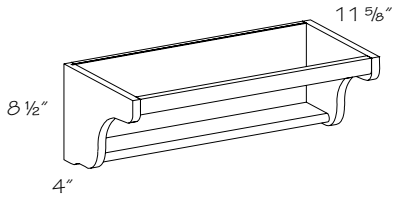

UCS12
UCS15
UCS18
UCS21
UCS24
UCS27
UCS30
UCS33
UCS36

- 3 7/8" shelf depth
- Solid wood/wood veneer construction
- Painted hardwood supplied for EverCore™
- ***Not*** available in Morristown; Melrose and Putnam supplied plain sawn

	PE
	APC
	APFC
	FPEB
	MI
●	CW
	RD
	ID
	CH
	XS
	GD

Under Cabinet Shelf Corner

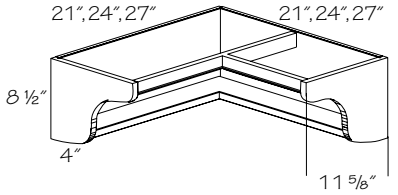

UCSC2121
UCSC2424
UCSC2727

- 3 7/8" shelf depth
- Solid wood/wood veneer construction
- For use with Wall Easy Reach (WEZR) Cabinets only
- Painted hardwood supplied for EverCore™
- Painted or Stained hardwood supplied for Wood-Grain Foil door styles
- ***Not*** available in Morristown; Melrose and Putnam supplied plain sawn

	PE
	APC
	APFC
	FPEB
	MI
	CW
	RD
	ID
	CH
	XS
	GD

Under Cabinet Shelf 18″ H

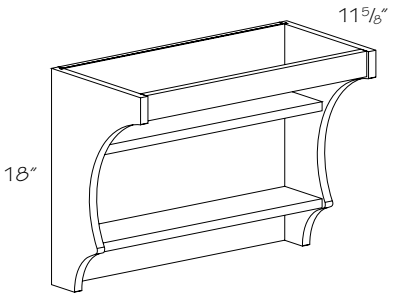

UCS1218
UCS1518
UCS1818
UCS2118
UCS2418
UCS2718
UCS3018
UCS3318
UCS3618

- 4 7/8" shelf depth
- Solid wood/wood veneer construction
- Painted hardwood supplied for EverCore™ and Thermofoil
- ***Not*** available in Morristown; Melrose and Putnam supplied plain sawn

	PE
	APC
	APFC
	FPEB
	MI
●	CW
	RD
	ID
	CH
	XS
	GD

Paper Towel Holder

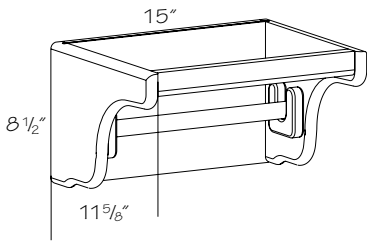

PTH15

- 4 7/8" shelf depth
- Solid wood/wood veneer construction
- Painted hardwood supplied for EverCore™ and Thermofoil
- ***Not*** available in Morristown; Melrose and Putnam supplied plain sawn

PE
APC
APFC
FPEB
MI
CW
RD
ID
CH
XS
GD

Stem Glass Holder

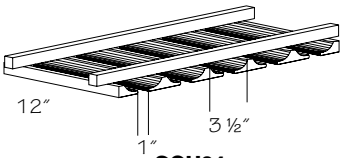

SGH24
SGH36

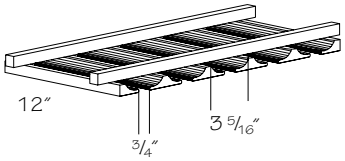

SGH30

SGH24	5 Sections
SGH30	7 Sections
SGH36	8 Sections

- Solid wood
- Mounts to bottom of wall cabinet
- Can be cut to fit smaller cabinets
- Oak supplied for Hickory
- Painted hardwood supplied for EverCore™ and Thermofoil
- High-Gloss finishes will be supplied as matching standard finish
- ***Not*** available in Morristown; Melrose and Putnam supplied plain sawn

PE
APC
APFC
FPEB
MI
CW
RD
ID
CH
XS
GD

Wire Stem Glass Holder

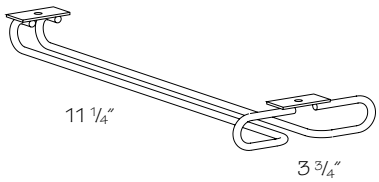

WSGH •SC Satin Chrome

- Mounts to underside of cabinet; a 3/4" spacer or Under Cabinet Panel (UCP) needed for proper installation
- Mounting screws included

PE
APC
APFC
FPEB
MI
CW
RD
ID
CH
XS
GD

Wine Shelf

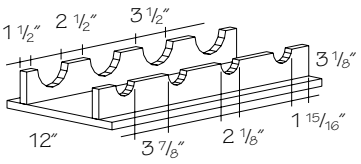

WS24	4 Bottles
WS30	5 Bottles
WS36	6 Bottles

- Solid wood/wood veneer construction
- Edgebanded one long and two short edges
- May be trimmed in field
- Crafted or Quartersawn door styles will be supplied in plain sawn wood
- Thermofoils are painted hardwood

PE
APC
APFC
FPEB
MI
CW
RD
ID
CH
XS
GD

Tray Dividers–Wall

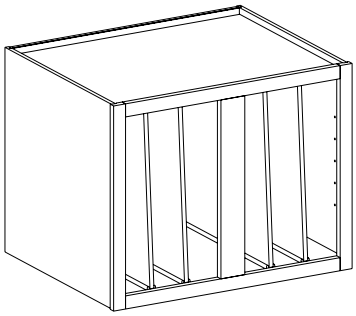

1TD
2TD
3TD
4TD
5TD
6TD

- Available factory installed for 24" deep wall refrigerator (WR) cabinets only
- Installed in wood or plastic U-channels
- Shelves are eliminated when this option is selected
- Specify quantity and location
- 1/2" natural Birch Viraguard
- Order Example: WR2724-3TD (spaced evenly)

PE APC APFC FPEB MI CW RD ID CH XS GD

K-Cup® Shelf Kit

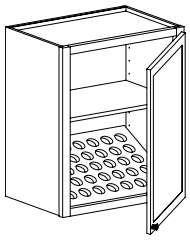

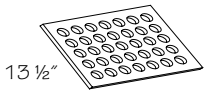

10 5/8", 13 5/8", 16 5/8", 19 5/8", 22 5/8"

KCSK12	Holds 20 K-Cups®
KCSK15	Holds 25 K-Cups®
KCSK18	Holds 35 K-Cups®
KCSK21	Holds 40 K-Cups®
KCSK24	Holds 45 K-Cups®

- Available for 12" deep cabinets only
- Field installation only
- K-cup® is a registered trademark of Keurig Green Mountain, Inc.

PE APC APFC FPEB MI CW RD ID CH XS GD

Chrome Lazy Susan Kit for Wall Angle Cabinets

30"
33"
36"
39"
42"

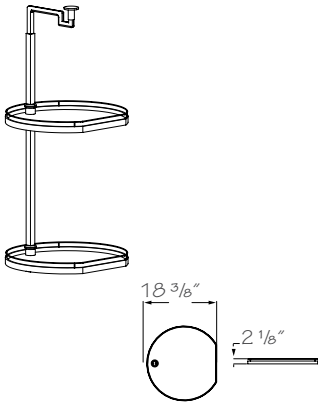

LSKC30•33	for 30" and 33" high
LSKC36•39	for 36" and 39" high
LSKC42	for 42" high

- 19 11/16" diameter rotating shelves
- Maximum weight per shelf is 18 lbs.
- Shelves rotate together
- Shelves are wood grain melamine with chrome rails
- Designed for installation in a WA24__ cabinet only
- Field installation only

PE APC APFC FPEB MI CW RD ID CH XS GD

Wood Lazy Susan Kit for Wall Angle Cabinets

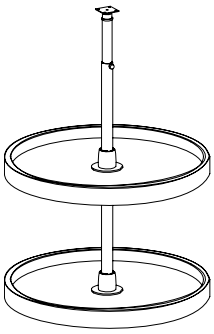

Two shelves

LSK18 •WLS	for 30" high
LSK1833 •WLS	for 33" high

Three shelves

LSK1836 •WLS	for 36" high
LSK1839 •WLS	for 39" high
LSK1842 •WLS	for 42" high

- 19 1/2" diameter rotating shelves
- Rotating shelves have plywood floor and solid wood trim
- Designed for installation in a WA24__ cabinet only
- Field installation only

PE APC APFC FPEB MI CW RD ID CH XS GD

Spice Rack Kit

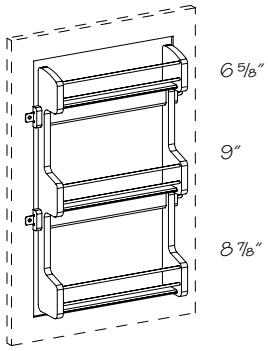

SRK15	9 1/2" wide
SRK18	12 1/2" wide
SRK21	15 1/2" wide

- Rack is 3 1/8" deep
- Three fixed shelves, 2 1/8" deep
- Minimum cabinet height 30"
- Includes mounting hardware
- Field installation only

PE
APC
APFC
FPEB
MI
CW
RD
ID
CH
XS
GD

New

Spice Open Storage

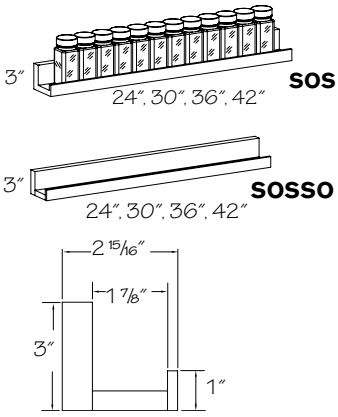

With Bottles

SOS24	12 spice bottles
SOS30	18 spice bottles
SOS36	18 spice bottles
SOS42	24 spice bottles

Shelf Only

SOSSO24
SOSSO30
SOSSO36
SOSSO42

Grey color coding indicates new product, size or code.

- Spice bottles measure 1 3/4" x 1 3/4" x 4", 4 oz. capacity, clear glass
- Satin metal lids
- Painted or Stained hardwood supplied for Wood-Grain Foil door styles
- ***Note:***
  SOS30 is supplied with 18 spice bottles, 15 bottles will fit on the shelf.
  SOS42 is supplied with 24 spice bottles, 21 bottles will fit on the shelf

PE
APC
APFC
FPEB
MI
CW
RD
ID
CH
XS
GD

New

Replacement Spice Bottle

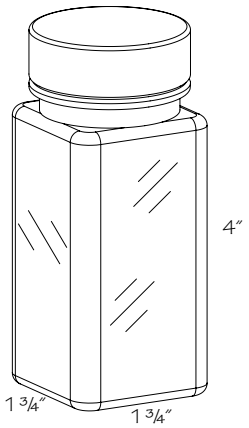

SPBTL

Grey color coding indicates new product, size or code.

- Spice bottles measure 1 3/4" x 1 3/4" x 4", 4 oz. capacity, clear glass
- Satin metal lids
- Also used with the Spice Caddy (SPCD.B or SPCD)
- Sold in quantities of 6

PE
APC
APFC
FPEB
MI
CW
RD
ID
CH
XS
GD

Tiered Storage Shelf

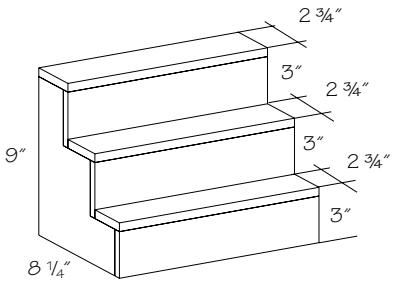

TSS15
TSS18
TSS21

- Solid wood
- Field installation only

PE APC APFC FPEB MI CW RD ID CH XS GD

Reverse-A-Shelf Kit

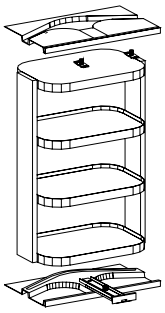

Three Shelves	*Shelf clearance top to bottom*
RSK2130	6 1/16" – 7 1/16" – 6 11/16"
RSK2136	8 1/8" – 9 1/16" – 8 11/16"
Four Shelves	
RSK2142	7 3/16" – 8" – 8" – 7 5/8"

- Designed for installation in 21" wide wall cabinets
- Shelf assembly pivots 180° for full shelf access
- Vinyl laminated shelves with wood grain T-molding
- Includes mounting hardware
- Field installation only

PE APC APFC FPEB MI CW RD ID CH XS GD



UCP1296

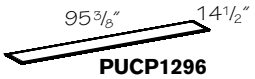

PUCP1296

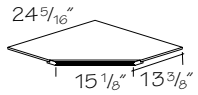

UCPWA

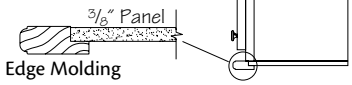

Under Cabinet Panels

PUCP1296
UCP1296
UCPWA

- 3/8" panel with matching Viraguard sides and applied solid wood edge molding
- Cabinet Panel Edge (CPE8) molding may be ordered separately; see Molding section of this book
- ***Not*** available in plywood
- Painted hardwood supplied for EverCore™
- Painted or Stained hardwood supplied for Wood-Grain Foil door styles
- ***Not*** available in Morristown; Melrose and Putnam supplied plain sawn

PE APC APFC FPEB MI CW RD ID CH XS GD

We recommend using Under Cabinet Panels (UCP) on all wall cabinet runs. This will give the kitchen an elegant finished look. Unless ordered with a matching wood veneer interior option, the under side of wall cabinets are a natural birch material.

Wall Filler

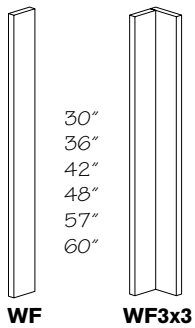

WF **WF3x3**



30" High	*57" High*
WF3•30	**WF3•57**
WF6•30	**WF6•57**
36" High	*60" High*
WF3•36	**WF3•60**
42" High	**WF6•60**
WF3•42	*30" High*
WF6•42	**WF3X3•30**
48" High	*42" High*
WF3•48	**WF3X3•42**

Grey color coding indicates new product, size or code.

- 3/4" thick solid wood
- Finished one side only
- Filler overlay has routed door profile and is made from the same material as doors and drawer fronts
- Painted hardwood supplied for EverCore™ and Thermofoil
- Painted or Stained hardwood supplied for Wood-Grain Foil door styles

PE APC APFC FPEB MI CW RD ID CH XS GD

Remember to use fillers with full overlay door styles, especially square edge profiles, when cabinets will be against a return wall, box, pilaster or column. Use fillers on all overlays if there is case molding on a return wall. This will ensure proper clearance for drawers and roll-out tray access.

Wall Filler Overlay

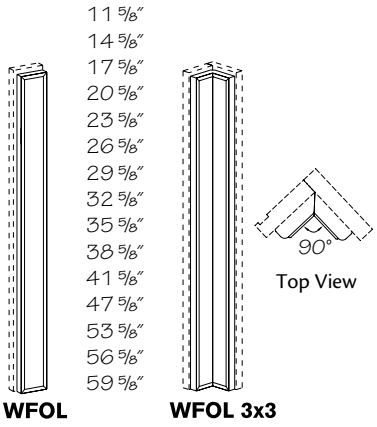

WFOL3•12	**WFOL3•42**
WFOL6•12	**WFOL6•42**
WFOL3•15	❄ **WFOL3•48**
WFOL6•15	❄ **WFOL6•48**
WFOL3•18	❄ **WFOL3•54**
WFOL6•18	❄ **WFOL6•54**
WFOL3•21	**WFOL3•57**
WFOL6•21	**WFOL6•57**
WFOL3•24	**WFOL3•60**
WFOL6•24	**WFOL6•60**
WFOL3•27	▲ **WFOL3X3•30**
WFOL6•27	▲ **WFOL3X3•33**
WFOL3•30	▲ **WFOL3X3•36**
WFOL6•30	▲ **WFOL3X3•39**
WFOL3•33	▲ **WFOL3X3•42**
WFOL6•33	**WFOL3•48•FH**
WFOL3•36	**WFOL6•48•FH**
WFOL6•36	**WFOL3•54•FH**
WFOL3•39	**WFOL6•54•FH**
WFOL6•39	

❄ Two pieces

▲ Shipped as two pieces in Thermofoil and Wood-Grain Foil door styles. ***Must*** be field trimmed and mitered

- Available in full overlay door styles only
- Available in High-Gloss Foils finish except in 3X3 models
- Filler overlay has routed door profile and is made from the same material as doors and drawer fronts
- Quartersawn Oak door styles are 3/4″ quartersawn wood with matching door profile on all sides. Quartersawn Cherry and Maple door styles are quartersawn wood veneer
- Filler ordered separately

PE
APC
APFC
FPEB
MI
CW
RD
ID
CH
XS
GD

Wall Inside Corner Angle Filler

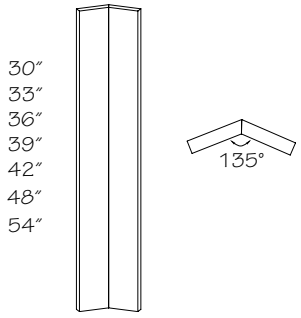

ICAF30
ICAF33
ICAF36
ICAF39
ICAF42
ICAF48
ICAF54

- 3/4″ thick solid wood
- Crafted or Quartersawn door styles will be supplied in plain sawn wood
- Painted hardwood supplied for EverCore™
- Painted or Stained hardwood supplied for Wood-Grain Foil door styles
- Finished one side only
- ***Not*** available in Thermofoil door styles

PE
APC
APFC
FPEB
MI
CW
RD
ID
CH
XS
GD

Wall Inside Corner Angle Filler Overlay

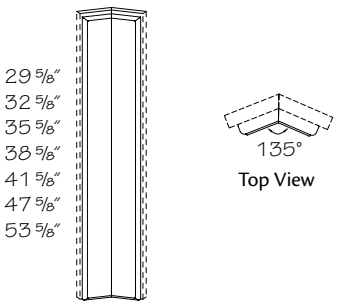

ICAFOL30
ICAFOL33
ICAFOL36
ICAFOL39
ICAFOL42
ICAFOL48
ICAFOL54

- Available in full overlay door styles only
- Filler overlay has routed door profile and is solid wood
- Filler overlay has routed door profile and is made from the same material as doors and drawer fronts
- Filler ordered separately
- Shipped as two pieces
- ***Not*** available in Thermofoil door styles

PE
APC
APFC
FPEB
MI
CW
RD
ID
CH
XS
GD

Wall Fluted Filler

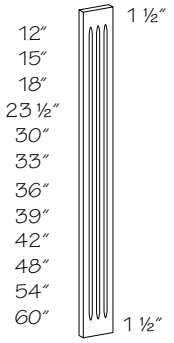

WFF3•12	**WFF3•36**
WFF6•12	**WFF6•36**
WFF3•15	**WFF3•39**
WFF6•15	**WFF6•39**
WFF3•18	**WFF3•42**
WFF6•18	**WFF6•42**
WFF3•24	**WFF3•48**
WFF6•24	**WFF6•48**
WFF3•30	**WFF3•54**
WFF6•30	**WFF6•54**
WFF3•33	**WFF3•60**
WFF6•33	**WFF6•60**

- 3/4″ thick solid wood
- Trimmable 5/8″ each side
- Painted hardwood supplied for EverCore™ and Thermofoil
- Painted or Stained hardwood supplied for Wood-Grain Foil door styles
- ***Not*** available in Morristown; Melrose and Putnam supplied plain sawn

PE **APC** **APFC** **FPEB** **MI** **CW** **RD** **ID** **CH** **XS** **GD**

Plain Capital Wall Fluted Filler

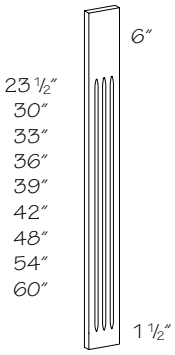

PCWFF3•24	**PCWFF3•42**
PCWFF6•24	**PCWFF6•42**
PCWFF3•30	**PCWFF3•48**
PCWFF6•30	**PCWFF6•48**
PCWFF3•33	**PCWFF3•54**
PCWFF6•33	**PCWFF6•54**
PCWFF3•36	**PCWFF3•60**
PCWFF6•36	**PCWFF6•60**
PCWFF3•39	
PCWFF6•39	

- 3/4″ thick solid wood
- Trimmable 5/8″ each side
- Painted hardwood supplied for EverCore™ and Thermofoil
- Painted or Stained hardwood supplied for Wood-Grain Foil door styles
- ***Not*** available in Morristown; Melrose and Putnam supplied plain sawn

PE **APC** **APFC** **FPEB** **MI** **CW** **RD** **ID** **CH** **XS** **GD**

Rosette Wall Fluted Filler

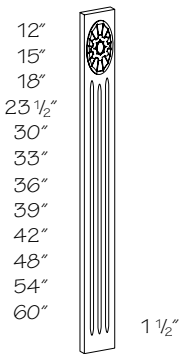

RWFF3•12
RWFF3•15
RWFF3•18
RWFF3•24
RWFF3•30
RWFF3•33
RWFF3•36
RWFF3•39
RWFF3•42
RWFF3•48
RWFF3•54
RWFF3•60

- 3/4″ thick solid wood
- Applied decorative rosette
- Painted hardwood supplied for EverCore™ and Thermofoil
- ***Not*** available in Rustic Alder door styles
- ***Not*** available in Wood-Grain Foil door styles
- ***Not*** available in Morristown; Melrose and Putnam supplied plain sawn

PE **APC** **APFC** **FPEB** **MI** **CW** **RD** **ID** **CH** **XS** **GD**

Rosette Wall Fluted Filler Overlay

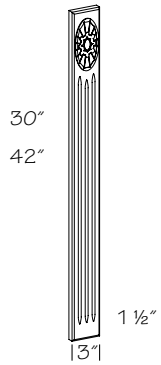

RFWFOL3•30
RFWFOL3•42

- 3/4″ thick solid wood
- Applied decorative rosette
- Painted hardwood supplied for EverCore™ and Thermofoil
- ***Not*** available in Rustic Alder door styles
- ***Not*** available in Wood-Grain Foil door styles
- ***Not*** available in Morristown; Melrose and Putnam supplied plain sawn

PE **APC** **APFC** **FPEB** **MI** **CW** **RD** **ID** **CH** **XS** **GD**

Filler Extension

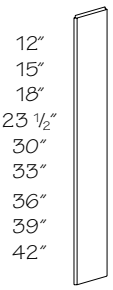

Filler Extension

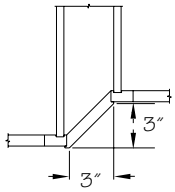

Filler Extension Application

FE3•12
FE3•15
FE3•18
FE3•24
FE3•30
FE3•33
FE3•36
FE3•39
FE3•42

- 3/4" thick solid wood
- Crafted or Quartersawn door styles will be supplied in plain sawn wood
- Painted hardwood supplied for EverCore™ and Thermofoil
- Painted or Stained hardwood supplied for Wood-Grain Foil door styles

PE
APC
APFC
FPEB
MI
CW
RD
ID
CH
XS
GD

Fluted Filler Extension

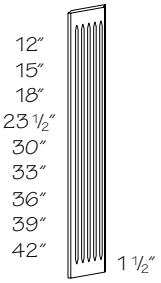

Fluted Filler Extension

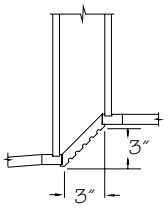

Filler Extension Application

FFE3•12
FFE3•15
FFE3•18
FFE3•24
FFE3•30
FFE3•33
FFE3•36
FFE3•39
FFE3•42

- 3/4" thick solid wood
- Painted hardwood supplied for EverCore™ and Thermofoil
- Painted or Stained hardwood supplied for Wood-Grain Foil door styles
- ***Not*** available in Morristown; Melrose and Putnam supplied plain sawn

PE
APC
APFC
FPEB
MI
CW
RD
ID
CH
XS
GD

Wall Box

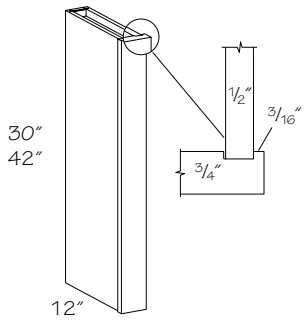

WB3•30
WB3•42

- Finished front and both sides
- Reversible, may be used on either right or left end
- Crafted or Quartersawn door styles will be supplied in plain sawn wood
- Painted hardwood supplied for EverCore™
- Foil-wrapped MDF supplied for Wood-Grain Foil door styles on face frame only

● PE
● APC
● APFC
● FPEB
MI
CW
● RD
● ID
● CH
XS
GD

Wall Column

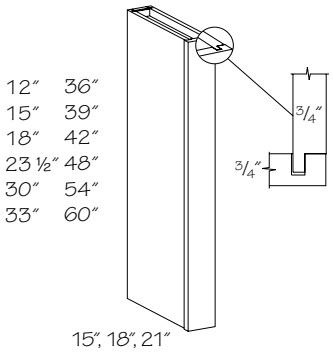

❍❒**WC31512**
❒ **WC61512**
❍ **WC31515**
WC61515
❍ **WC31518**
WC61518
❍ **WC31524**
WC61524
❍ **WC31530**
WC61530
❍ **WC31533**
WC61533
❍ **WC31536**
WC61536
❍ **WC31539**
WC61539

❍ **WC31542**
WC61542
❍ **WC31548**
WC61548
❍ **WC31848**
❍ **WC32148**
❍ **WC31554**
WC61554
❍ **WC31854**
❍ **WC32154**
❍ **WC31560**
WC61560
❍ **WC31860**
❍ **WC32160**

❍ Change Width (CW) option ***not*** available
❒ Change Height (CH) option ***not*** available

- Front is 3/4" solid wood
- Quartersawn Oak door styles have 3/4" solid quartersawn wood front and quartersawn wood veneer end panels
- Painted hardwood supplied for EverCore™
- Foil-wrapped MDF supplied for Wood-Grain Foil door styles on face frame only
- Plain sawn material supplied for Barnet Crafted door styles
- Finished front and both sides
- Reversible, may be used on either right or left end
- ☆ APFC standard when APC option is selected

PE
● APC
☆ APFC
❖ FPEB
MI
☆ CW
● RD
● ID
☆ CH
XS
GD

Wall Fluted Column

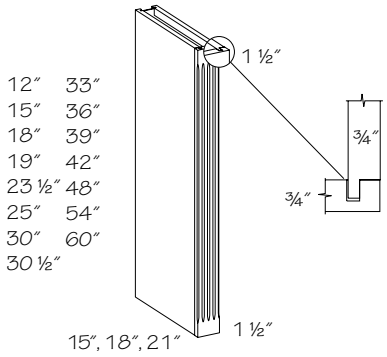

❒	**WFC31512**	**WFC31536**
	WFC31515	**WFC31539**
	WFC31518	**WFC31542**
	WFC31819	**WFC31548**
	WFC32119	**WFC31848**
	WFC31524	**WFC32148**
	WFC31825	**WFC31554**
	WFC32125	**WFC31854**
	WFC31530	**WFC32154**
	WFC31831	**WFC31560**
	WFC32131	**WFC31860**
	WFC31533	**WFC32160**

❒ Change Height (CH) option ***not*** available

- Fluted front is 3/4″ solid wood; plain sawn wood supplied for quartersawn door styles
- Reversible, may be used on either right or left end
- Finished front and both sides
- Quartersawn Oak door styles have quartersawn wood veneer end panels
- Painted hardwood supplied for EverCore™
- Painted or Stained hardwood supplied for Wood-Grain Foil door styles
- ***Not*** available in Morristown

☆ APFC standard when APC option is selected

PE
● APC
☆ APFC
❖ FPEB
MI
CW
● RD
● ID
☆ CH
XS
GD

Sterling Wall Column

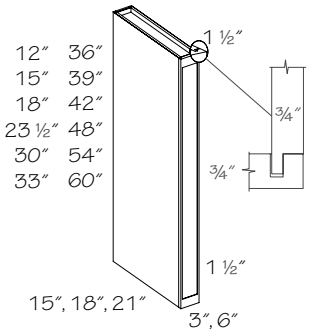

	STWC31512	**STWC31542**
	STWC61512	**STWC61542**
	STWC31515	**STWC31548**
	STWC61515	**STWC61548**
	STWC31518	**STWC31848**
	STWC61518	**STWC32148**
	STWC31524	**STWC31554**
	STWC61524	**STWC61554**
	STWC31530	**STWC31854**
	STWC61530	**STWC32154**
	STWC31533	**STWC31560**
	STWC61533	**STWC61560**
	STWC31536	**STWC31860**
	STWC61536	**STWC32160**
	STWC31539	
	STWC61539	

- Front is 3/4″ solid wood
- Finished front and both sides
- Available in Rustic Alder, Cherry, EverCore™, Maple and White Wood-Grain Foil door styles only
- Painted hardwood supplied for Wood-Grain Foil door styles; only available in white
- Painted hardwood supplied for EverCore™
- Reversible, may be used on either right or left end

☆ APFC standard when APC option is selected

PE
● APC
☆ APFC
❖ FPEB
MI
CW
● RD
● ID
CH
XS
GD

Plain Capital Wall Fluted Column

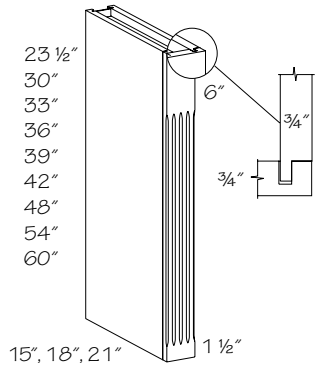

	PCWFC31524	**PCWFC31554**
	PCWFC31530	**PCWFC31854**
	PCWFC31533	**PCWFC32154**
	PCWFC31536	**PCWFC31560**
	PCWFC31539	**PCWFC31860**
	PCWFC31542	**PCWFC32160**
	PCWFC31548	
	PCWFC31848	
	PCWFC32148	

- Fluted front is 3/4″ solid wood; plain sawn wood supplied for quartersawn door styles
- Quartersawn Oak door styles have quartersawn wood veneer end panels
- Painted hardwood supplied for EverCore™
- Painted or Stained hardwood supplied for Wood-Grain Foil door styles
- Plain sawn material supplied for Barnet Crafted door styles
- Finished front and both sides
- Reversible, may be used on either right or left end
- ***Not*** available in Morristown

☆ APFC standard when APC option is selected

PE
● APC
☆ APFC
❖ FPEB
MI
CW
● RD
● ID
● CH
XS
GD

Rosette Wall Fluted Column

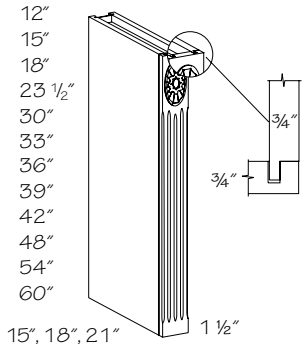

❒	**RWFC31512**	**RWFC31548**
❒	**RWFC31515**	**RWFC31848**
❒	**RWFC31518**	**RWFC32148**
	RWFC31524	**RWFC31554**
	RWFC31530	**RWFC31854**
	RWFC31533	**RWFC32154**
	RWFC31536	**RWFC31560**
	RWFC31539	**RWFC31860**
	RWFC31542	**RWFC32160**

❒ Change Height (CH) option ***not*** available

- Fluted front is 3/4″ solid wood; plain sawn wood supplied for quartersawn door styles
- Applied decorative rosette
- Quartersawn Oak door styles have quartersawn wood veneer end panels
- Finished front and both sides
- Reversible, may be used on either right or left end
- Painted hardwood supplied for EverCore™ and Thermofoil
- ***Not*** available in Rustic Alder door styles
- ***Not*** available in Wood-Grain Foil door styles
- ***Not*** available in Morristown

☆ APFC standard when APC option is selected

	PE
●	APC
☆	APFC
❖	FPEB
	MI
	CW
●	RD
●	ID
☆	CH
	XS
	GD

Wall End Panel

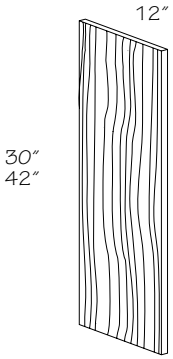

	Viraguard	*Width x Height x Thickness*
■	**VWEP30**	12″ x 30″ x 3/4″
■	**VWEP42**	12″ x 42″ x 3/4″
	Wood Veneer	
❄	**WWEP30**	12″ x 30″ x 13/16″
❄	**WWEP42**	12″ x 42″ x 13/16″

■ ***Not*** available in Morristown; Melrose and Putnam supplied plain sawn

❄ Painted hardwood supplied for EverCore™ and Thermofoil

- Edgebanded one long and two short edges
- Finished to match exterior both sides
- Wood Veneer Panels will have painted or stained hardwood supplied for Wood-Grain Foil door styles

☆ APC panel only available in wood veneer

☆ APC panel is 11/16″ thick

	PE
☆	APC
	APFC
	FPEB
	MI
	CW
	RD
	ID
●	CH
	XS
	GD

Wall End Panel w/Stile

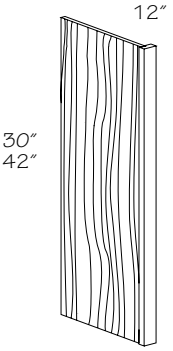

WEP1 1/2▪30
WEP3▪30
WEP1 1/2▪42
WEP3▪42

- Left shown
- Crafted or Quartersawn door styles will be supplied in plain sawn wood
- Painted hardwood supplied for EverCore™
- Painted or Stained hardwood supplied for Wood-Grain Foil door styles
- Viraguard panels are edgebanded two short edges
- Exterior finished to match, interior is Natural Birch Viraguard and machined to match a cabinet end panel
- Reversible, may be used on either right or left end

●	PE
●	APC
●	APFC
●	FPEB
●	MI
	CW
●	RD
●	ID
●	CH
	XS
	GD

Matching Wall End Panel

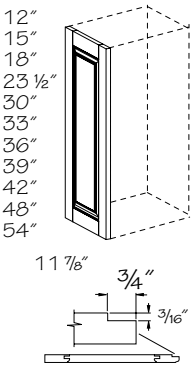

Specify R or L	*Peninsula*
❒ **MWEP12 R or L**	■❒ **PMWEP12**
MWEP15 R or L	■ **PMWEP15**
MWEP18 R or L	■ **PMWEP18**
MWEP24 R or L	■ **PMWEP24**
MWEP30 R or L	■ **PMWEP30**
MWEP33 R or L	■ **PMWEP33**
MWEP36 R or L	■ **PMWEP36**
MWEP39 R or L	■ **PMWEP39**
MWEP42 R or L	■ **PMWEP42**
▲ **MWEP48 R or L**	
▲ **MWEP54 R or L**	

❒ Change Height (CH) option ***not*** available

▲ Available in full overlay door styles only

■ ***Not*** available in Wood-Grain Foil door styles

- 3/4" thick
- Inside of matching panel bottom rail will line up with inside bottom rail of door
- Left shown
- Field installation only
- Thermofoil, mitered and slab door styles do ***not*** have grooves and will ***not*** fit flush against 1/2" end panel. A 3/16" shim is recommended
- Peninsula panel has routed door profile front and back
- ***Not*** available in High-Gloss Foil door styles
- ***Not*** available in Morristown

When designing with Matching End Panels the reveal will differ from the cabinet door height reveal. Matching End Panels cover the entire side of the cabinet. See drawing for exact measurements

	PE
	APC
	APFC
	FPEB
	MI
	CW
	RD
	ID
☆	CH
	XS
	GD

Matching Wall End Panel–Square Edges

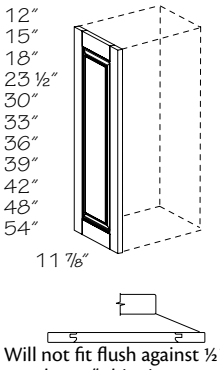

Will not fit flush against ½″ end panel; a 3/16″ shim is recommended

- ❒ **MWEP12 S**
- **MWEP15 S**
- **MWEP18 S**
- **MWEP24 S**
- **MWEP30 S**
- **MWEP33 S**
- **MWEP36 S**
- **MWEP39 S**
- **MWEP42 S**
- ▲ **MWEP48 S**
- ▲ **MWEP54 S**

❒ Change Height (CH) option ***not*** available
▲ Available in full overlay door styles only

- 3/4″ thick panel with square edge front and back
- Inside of matching panel bottom rail will line up with inside bottom rail of door
- Reversible, may be used on either right or left end
- Field installation only
- No frame recess dado
- ***Not*** available in High-Gloss Foil, Thermofoil or Wood-Grain Foil door styles
- ***Not*** available in mitered door styles
- ***Not*** available in Morristown

PE
APC
APFC
FPEB
MI
CW
RD
ID
☆ CH
XS
GD

Furniture Matching Wall End Panel

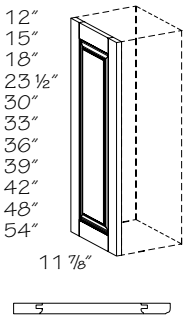

Specify R or L	*Peninsula*
❒ **FMWEP12 R or L**	❒ **FPMWEP12**
FMWEP15 R or L	**FPMWEP15**
FMWEP18 R or L	**FPMWEP18**
FMWEP24 R or L	**FPMWEP24**
FMWEP30 R or L	**FPMWEP30**
FMWEP33 R or L	**FPMWEP33**
FMWEP36 R or L	**FPMWEP36**
FMWEP39 R or L	**FPMWEP39**
FMWEP42 R or L	**FPMWEP42**
▲ **FMWEP48 R or L**	
▲ **FMWEP54 R or L**	

❒ Change Height (CH) option ***not*** available
▲ Available in full overlay door styles only

- 3/4″ thick
- Inside of matching panel bottom rail will line up with inside bottom rail of door
- Left shown
- Field installation only
- Peninsula panel has routed door profile front and back
- For use with Furniture Plywood Ends (FPEB)—flush ends
- ***Not*** available in High-Gloss Foil or Wood-Grain Foil door styles
- ***Not*** available in Morristown

PE
APC
APFC
FPEB
MI
CW
RD
ID
☆ CH
XS
GD

Overlay Panel For Wall Blind Corner Cabinets

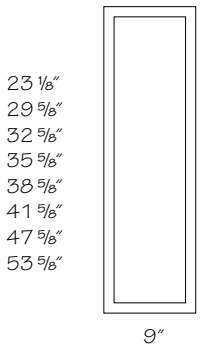

- **OPWBC24**
- **OPWBC30**
- **OPWBC33**
- **OPWBC36**
- **OPWBC39**
- **OPWBC42**
- **OPWBC48**
- **OPWBC54**

- Available in full overlay door styles only
- Overlay Panel has routed door profile and is made from the same material as doors and drawer fronts
- Field miter

PE
APC
APFC
FPEB
MI
CW
RD
ID
CH
XS
GD

Diagonal Installation of Standard Wall Cabinets

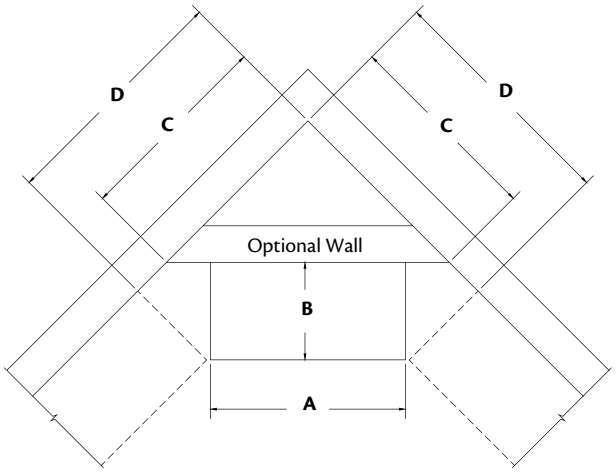

Note: Fillers are always recommended at both sides of cabinet junction points to allow for wall variations and drawer clearances

Caption Width A	Caption Width B	Wall Dimensions C	Wall Dimensions D
12″	12″	16 1/8″	21 7/8″
15″	12″	18 1/4″	23 1/4″
18″	12″	20 3/8″	25 3/8″
21″	12″	22 1/2″	27 1/2″
24″	12″	24 5/8″	29 5/8″
27″	12″	26 3/4″	31 3/4″
30″	12″	28 7/8″	33 7/8″
33″	12″	31″	36″
34″	12″	31 11/16″	33 13/16″
36″	12″	33 1/8″	38 1/8″
37″	12″	36 11/16″	38 13/16″
39″	12″	35 1/4″	40 1/4″
42″	12″	37 3/8″	42 3/8″
45″	12″	39 1/2″	44 1/2″
48″	12″	41 5/8″	46 5/8″

Base Cabinets

B	12	24	40	R	•FH
code	width	depth	height	hinge	suffix

Note: Standard base cabinet box depth is 24" unless stated otherwise. Add door thickness with bumpers for total depth.

When BUTT is in all capitals, it ***must*** be included as part of your ordering nomenclature. A (Butt) in parentheses is for your information and isn't required on an order form.

Material dimensions listed may vary slightly from actual dimensions of the product.

Specifications subject to change without notice.

Construction Options and Modifications

❖ Included as standard
● Available with an upcharge
☆ Available with exceptions
(Blank) ***Not*** available

PE	Plywood Ends
APC	All Plywood Construction
APFC	All Plywood Furniture Construction
FPEB	Furniture Plywood Ends
MI	Matching Interior
DE	Integrated Decorative End
OE	Operational End
AD_E	Attached Decorative End
CW	Change Width
RD	Reduced Depth
CH	Change Height
IF	Inverted Frame
TWR	Top Wide Rail
WR	Wide Bottom Rail
XS	Extended Stile
XSG	Integrated Extended Stile
GD	Glass Doors
RTK	Recessed Toe Kick
RTKP	Recessed Toe Kick Peninsula
VTK	Void Toe Kick
TKD	Toe Kick Drawer

Base Single Door

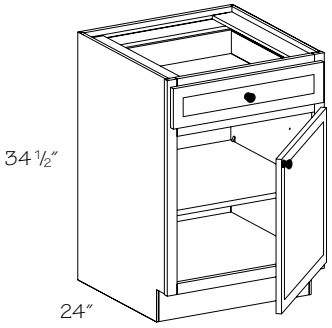

Specify R or L

❍◆☆†**B9 R or L-1D**
B12 R or L
B15 R or L
B18 R or L
B21 R or L
B24 R or L

❍ Change Width (CW) option ***not*** available
◆ Recessed Toe Kick Both Sides (RTKB) ***not*** available
☆ Glass door option ***not*** available
† Toe Kick Drawer (TKD) option ***not*** available

• One adjustable shelf
☆ Operational End (OE) is ***not*** available with Reduced Depth (RD) options

● PE	● IF
● APC	● TWR
● APFC	● WR
● FPEB	● XS
● MI	● XSG
● DE	☆ GD
☆ OE	☆ RTK
● AD_E	● RTKP
☆ CW	● VTK
● RD	☆ TKD
● CH	

Base Double Door

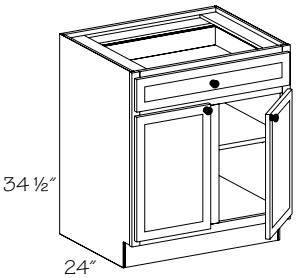

❍ **B24 BUTT**
B27 (Butt)
B30
B30 BUTT
B33
B33 BUTT
B36
B36 BUTT
B39

❍ Change Width (CW) option ***not*** available

• One adjustable shelf
☆ Operational End (OE) is ***not*** available with Reduced Depth (RD) options

● PE	● IF
● APC	● TWR
● APFC	● WR
● FPEB	● XS
● MI	● XSG
● DE	● GD
☆ OE	● RTK
● AD_E	● RTKP
☆ CW	● VTK
● RD	● TKD
● CH	

Base Double Door Double Drawer

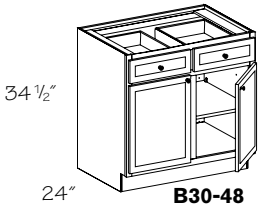

B30-48

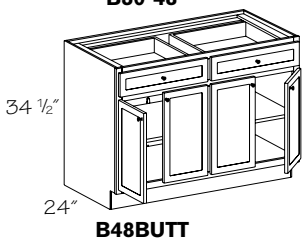

B48BUTT

B30 ▪2D
B33 ▪2D
B36 ▪2D
B39 ▪2D
B42
† **B45**
† **B48**
❍▲† **B48 BUTT**

† Toe Kick Drawer (TKD) option ***not*** available
❍ Change Width (CW) option ***not*** available
▲ Two pair of butt doors

• 3" center stile
• Two drawers
• One adjustable shelf
☆ Operational End (OE) is ***not*** available with Reduced Depth (RD) options

● PE	● IF
● APC	● TWR
● APFC	● WR
● FPEB	● XS
● MI	● XSG
● DE	● GD
☆ OE	● RTK
● AD_E	● RTKP
☆ CW	● VTK
● RD	☆ TKD
● CH	

Base Single Door w/Deluxe Dovetailed Full-Width Tray(s)

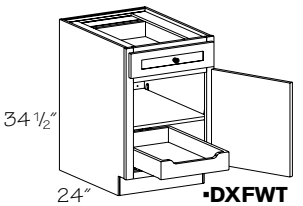

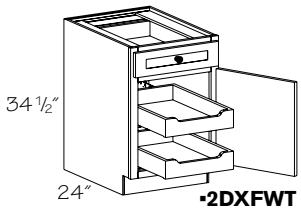

Specify R or L
One tray, one adjustable shelf

❍ **B12 R or L▪DXFWT**
B15 R or L▪DXFWT
B18 R or L▪DXFWT
B21 R or L▪DXFWT
B24 R or L▪DXFWT

Specify R or L
Two trays, no shelf

❍ **B12 R or L▪2DXFWT**
B15 R or L▪2DXFWT
B18 R or L▪2DXFWT
B21 R or L▪2DXFWT
B24 R or L▪2DXFWT

❍ Change Width (CW) option ***not*** available

- Adjustable, full-width Roll-out Tray(s) (ROT)
- Roll-out Trays (ROT) are 4″ deep, 5/8″ solid wood dovetailed sides with 3/16″ plywood bottom, notched front and full extension runners with integrated buffer

☆ Reduced Depth (RD) available in 18″ and 21″ depths only

●	PE		IF
●	APC	●	TWR
●	APFC	●	WR
●	FPEB	●	XS
●	MI		XSG
●	DE	●	GD
	OE	●	RTK
●	AD_E	●	RTKP
☆	CW	●	VTK
☆	RD	●	TKD
●	CH		

Base Double Door w/Deluxe Dovetailed Full-Width Tray(s)

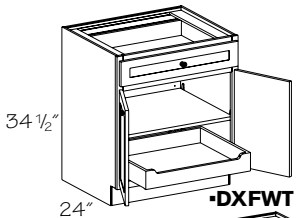

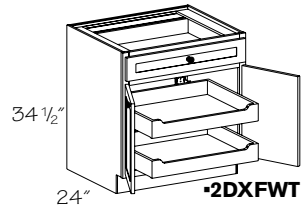

One tray,
one adjustable shelf

❍ **B24 BUTT▪DXFWT**
B27 (Butt)▪DXFWT
B30 BUTT▪DXFWT
B33 BUTT▪DXFWT
B36 BUTT▪DXFWT

Two trays,
no shelf

❍ **B24 BUTT▪2DXFWT**
B27 (Butt)▪2DXFWT
B30 BUTT▪2DXFWT
B33 BUTT▪2DXFWT
B36 BUTT▪2DXFWT

❍ Change Width (CW) option ***not*** available

- Adjustable, full-width Roll-out Tray(s) (ROT)
- Roll-out Trays (ROT) are 4″ deep, 5/8″ solid wood dovetailed sides with 3/16″ plywood bottom, notched front and full extension runners with integrated buffer

☆ Reduced Depth (RD) available in 18″ and 21″ depths only

●	PE		IF
●	APC	●	TWR
●	APFC	●	WR
●	FPEB	●	XS
●	MI		XSG
●	DE	●	GD
	OE	●	RTK
●	AD_E	●	RTKP
☆	CW	●	VTK
☆	RD	●	TKD
●	CH		

Base Full-Height Single Door w/Tray Divider

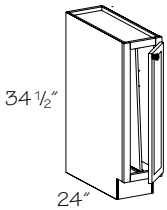

With divider

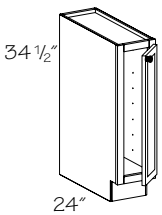

Without divider

Specify R or L
With Tray Divider

■❐★ **B9 R or L**

Without Tray Divider

▲❍❄†**B6 R or L**
B9 R or L▪VTD

■ ***Not*** available with Operational End Door (OE) option
❐ Change Height (CH) option ***not*** available
★ Integrated Extended Stile (XSG) is ***not*** available
▲ ***Not*** available with Recessed Toe Kick Peninsula (RTKP) Option
❍ Recessed Toe Kick Both Sides (RTKB) ***not*** available
❄ Wide Rail Plain only (WR)
† Door defaults to a slab design with an outside profile matching the selected door style

- Full-height door
- One full-height tray divider
- Vanderbilt doors will have a solid, recessed flat panel

☆ Tray divider ***cannot*** be included when Reduced Depth (RD) option of less than 6″ is selected
☆ Recessed Toe Kick Peninsula Both Sides (RTKPB) ***not*** available
☆ Operational End (OE) is ***not*** available with Reduced Depth (RD) options

●	PE		IF
●	APC		TWR
●	APFC	●	WR
●	FPEB	●	XS
●	MI	☆	XSG
●	DE		GD
☆	OE	☆	RTK
●	AD_E	☆	RTKP
	CW	●	VTK
☆	RD		TKD
☆	CH		

New

Base Full-Height Single Door - Full Overlay

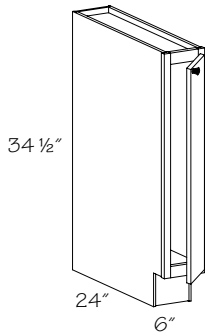

Specify R or L

❄◆†**B6 R or L▪FO**

❄ Recessed Toe Kick Both Sides (RTKB) ***not*** available
◆ Recessed Toe Kick Peninsula Both Sides (RTKPB) ***not*** available

Grey color coding indicates new product, size or code.

† Door defaults to a slab design with an outside profile matching the selected door style

- Frame rails are 15/16″ wide
- Available in full overlay only
- Full-height door

☆ Wide Rail Plain only (WR)

- Maximum Change Width (CW) 8 15/16″

●	PE		IF
●	APC		TWR
●	APFC	☆	WR
●	FPEB	●	XS
●	MI	●	XSG
●	DE		GD
●	OE	☆	RTK
	AD_E	☆	RTKP
●	CW	●	VTK
●	RD		TKD
●	CH		

Base Full-Height Single Door

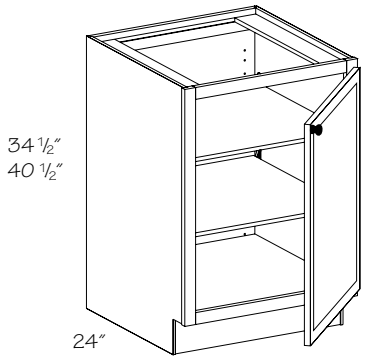

Specify R or L
34 1/2" High, two shelves

B12 R or L•FH
B15 R or L•FH
B18 R or L•FH
B21 R or L•FH
B24 R or L•FH

Specify R or L
40 1/2" High, three shelves

B122440 R or L•FH
B152440 R or L•FH
B182440 R or L•FH
B212440 R or L•FH
B242440 R or L•FH

- Full-height door
- Adjustable shelves
- ☆ Operational End (OE) is ***not*** available with Reduced Depth (RD) options

● PE	IF
● APC	TWR
● APFC	● WR
● FPEB	● XS
● MI	● XSG
● DE	● GD
☆ OE	● RTK
● AD_E	● RTKP
● CW	● VTK
● RD	● TKD
● CH	

Base Full-Height Double Door

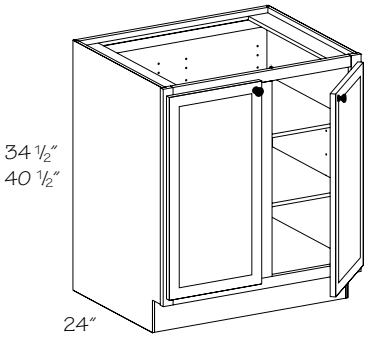

34 1/2" High, two shelves

❍ **B24 BUTT•FH**
B27 (Butt)•FH
B30 •FH
B30 BUTT•FH
B33 •FH
B33 BUTT•FH
B36 •FH
B36 BUTT•FH
B39 •FH
B42 •FH
† **B45 •FH**
† **B48 •FH**
▲❍† **B48 BUTT•FH**

40 1/2" High, three shelves

❍ **B242440 BUTT•FH**
B272440 (Butt)•FH
B302440 •FH
B302440 BUTT•FH
B332440 •FH
B332440 BUTT•FH
B362440 •FH
B362440 BUTT•FH

- Full-height door
- Adjustable shelves
- Only full-width Roll-out Trays (ROT) are available factory installed on 40 1/2″ high Base cabinets
- ☆ Operational End (OE) is ***not*** available with Reduced Depth (RD) options

● PE	IF
● APC	TWR
● APFC	● WR
● FPEB	● XS
● MI	● XSG
● DE	● GD
☆ OE	● RTK
● AD_E	● RTKP
☆ CW	● VTK
● RD	☆ TKD
● CH	

❍ Change Width (CW) option ***not*** available
† Toe Kick Drawer (TKD) option ***not*** available
▲ Two pair of butt doors

Base Full-Height Single Door 12" Deep

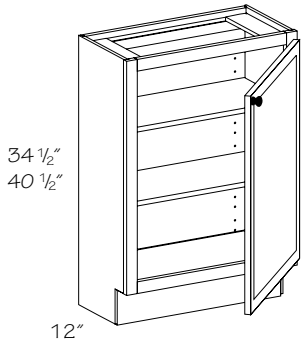

Specify R or L
34 1/2" High - two shelves

B1212 R or L•FH
B1512 R or L•FH
B1812 R or L•FH
B2112 R or L•FH
B2412 R or L•FH

Specify R or L
40 1/2" High - three shelves

B121240 R or L•FH
B151240 R or L•FH
B181240 R or L•FH
B211240 R or L•FH
B241240 R or L•FH

- Full-height door
- Adjustable shelves
- ☆ Operational End (OE) is ***not*** available with Reduced Depth (RD) options

● PE	IF
● APC	TWR
● APFC	● WR
● FPEB	● XS
● MI	● XSG
● DE	● GD
☆ OE	● RTK
● AD_E	RTKP
● CW	● VTK
● RD	TKD
● CH	

Base Full-Height Double Door 12" Deep

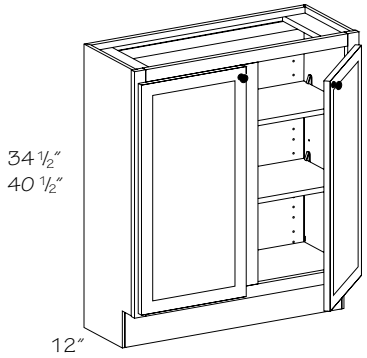

34 1/2" High - two shelves

❍ **B2412 BUTT•FH**
B2712 (Butt)•FH
B3012 •FH
B3012 BUTT•FH
B3312 •FH
B3312 BUTT•FH
B3612 •FH
B3612 BUTT•FH
B3912 •FH
B4212 •FH
B4512 •FH
B4812 •FH
▲❍ **B4812 BUTT•FH**

40 1/2" High - three shelves

❍ **B241240 BUTT•FH**
B271240 (Butt)•FH
B301240 •FH
B301240 BUTT•FH
B331240 •FH
B331240 BUTT•FH
B361240 •FH
B361240 BUTT•FH

- Full-height door
- Adjustable shelves
- ☆ Operational End (OE) is ***not*** available with Reduced Depth (RD) options

● PE	IF
● APC	TWR
● APFC	● WR
● FPEB	● XS
● MI	● XSG
● DE	● GD
☆ OE	● RTK
● AD_E	RTKP
☆ CW	● VTK
● RD	TKD
● CH	

Remember, a cabinet designated BUTT or (Butt) has no center stile. When you see the word BUTT in all capitals, it ***must*** be included as part of your ordering nomenclature, a (Butt) in parentheses is for your information and isn't required on an order form

❍ Change Width (CW) option ***not*** available
▲ Two pair of butt doors

Peninsula Base Single Door

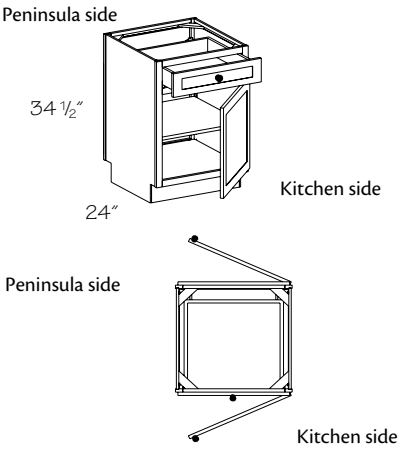

Specify R or L - hinging for kitchen side

PB12 R or L
PB15 R or L
PB18 R or L
PB21 R or L
PB24 R or L

- One adjustable shelf
- False drawer front on peninsula side
- Both doors hinged on same end panel

●	PE	●	IF
●	APC	●	TWR
●	APFC	●	WR
●	FPEB	●	XS
●	MI		XSG
●	DE	●	GD
	OE	●	RTK
●	AD_E	❖	RTKP
●	CW	●	VTK
●	RD		TKD
●	CH		

Peninsula Base Double Door

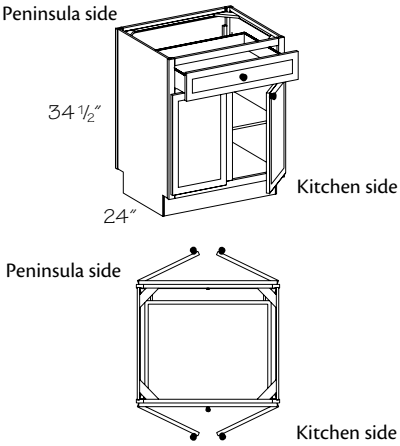

One drawer	*Two drawers*
❍ **PB24 BUTT**	**PB30 ▪2D**
PB27 (Butt)	**PB33 ▪2D**
PB30	**PB36 ▪2D**
PB30 BUTT	**PB39 ▪2D**
PB33	**PB42**
PB33 BUTT	**PB45**
PB36	**PB48**
PB36 BUTT	▲❍**PB48 BUTT**
PB39	

❍ Change Width (CW) option ***not*** available
▲ Four pair of butt doors

- One adjustable shelf
- False drawer front on peninsula side
- ☆ Glass inserts not available on ends

Remember, a cabinet designated BUTT or (Butt) has no center stile. When you see the word BUTT in all capitals, it ***must*** be included as part of your ordering nomenclature, a (Butt) in parentheses is for your information and isn't required on an order form

●	PE	●	IF
●	APC	●	TWR
●	APFC	●	WR
●	FPEB	●	XS
●	MI		XSG
●	DE	☆	GD
	OE	●	RTK
●	AD_E	❖	RTKP
☆	CW	●	VTK
●	RD		TKD
●	CH		

Peninsula Base Full-Height Single Door w/Tray Divider

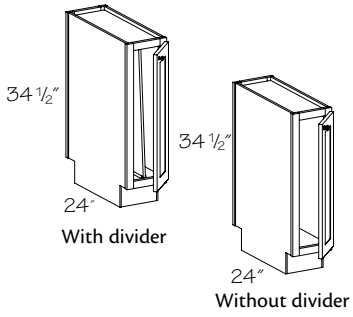

Specify R or L
With Tray Divider

■ **PB9 R or L**

Without Tray Divider

PB9 R or L▪VTD

■ ***Not*** available with Operational End Door (OE) option

- Full-height door
- One full-height tray divider
- Both doors hinged on same end panel
- ☆ Tray divider ***cannot*** be included when Reduced Depth (RD) option of less than 6″ is selected
- ☆ Recessed Toe Kick Peninsula Both Sides (RTKPB) ***not*** available
- ☆ Operational End (OE) is ***not*** available with Reduced Depth (RD) options

●	PE		IF
●	APC	●	TWR
●	APFC	●	WR
●	FPEB	●	XS
●	MI		XSG
●	DE		GD
☆	OE	☆	RTK
●	AD_E	●	RTKP
	CW	●	VTK
☆	RD		TKD
●	CH		

Peninsula Base Full-Height Single Door

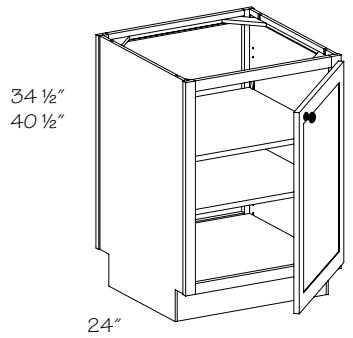

Specify R or L - hinging for kitchen side 34 1/2″ high - two shelves	*Specify R or L - hinging for kitchen side 40 1/2″ High - three shelves*
PB12 R or L▪FH	**PB122440 R or L▪FH**
PB15 R or L▪FH	**PB152440 R or L▪FH**
PB18 R or L▪FH	**PB182440 R or L▪FH**
PB21 R or L▪FH	**PB212440 R or L▪FH**
PB24 R or L▪FH	**PB242440 R or L▪FH**

- Adjustable shelves
- Both doors hinged on same end panel

●	PE		IF
●	APC		TWR
●	APFC	●	WR
●	FPEB	●	XS
●	MI		XSG
●	DE	●	GD
	OE	●	RTK
●	AD_E	❖	RTKP
●	CW	●	VTK
●	RD		TKD
●	CH		

Peninsula Base Full-Height Double Door

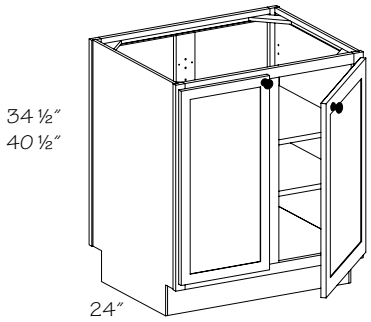

34 1/2" High - two shelves

❍ **PB24 BUTT•FH**
PB27 (Butt)•FH
PB30 •FH
PB30 BUTT•FH
PB33 •FH
PB33 BUTT•FH
PB36 •FH
PB36 BUTT•FH
PB39 •FH
PB42 •FH
PB45 •FH
PB48 •FH
❍ **PB48 BUTT•FH**

40 1/2" High - three shelves

❍ **PB242440 BUTT•FH**
PB272440 (Butt)•FH
PB302440 •FH
PB302440 BUTT•FH
PB332440 •FH
PB332440 BUTT•FH
PB362440 •FH
PB362440 BUTT•FH

❍ Change Width (CW) option ***not*** available

- Adjustable shelves

☆ Glass inserts not available on ends

Remember, a cabinet designated BUTT or (Butt) has no center stile. When you see the word BUTT in all capitals, it ***must*** be included as part of your ordering nomenclature, a (Butt) in parentheses is for your information and isn't required on an order form

●	PE		IF
●	APC		TWR
●	APFC	●	WR
●	FPEB	●	XS
●	MI		XSG
●	DE	☆	GD
	OE	●	RTK
●	AD_E	❖	RTKP
☆	CW	●	VTK
●	RD		TKD
●	CH		

Peninsula Base Full-Height Single Door 12" Deep

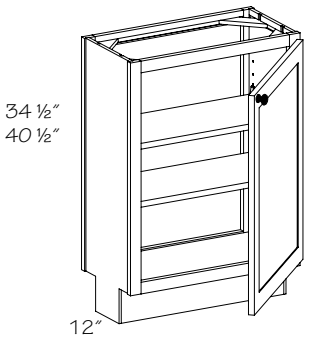

Specify R or L - hinging for kitchen side
34 1/2" High - two shelves

PB1212 R or L•FH
PB1512 R or L•FH
PB1812 R or L•FH
PB2112 R or L•FH
PB2412 R or L•FH

40 1/2" High - three shelves

PB121240 R or L•FH
PB151240 R or L•FH
PB181240 R or L•FH
PB211240 R or L•FH
PB241240 R or L•FH

- Adjustable shelves
- Both doors hinged on same end panel

●	PE		IF
●	APC		TWR
●	APFC	●	WR
●	FPEB	●	XS
●	MI		XSG
●	DE	●	GD
	OE	●	RTK
●	AD_E	❖	RTKP
●	CW	●	VTK
●	RD		TKD
●	CH		

Peninsula Base Full-Height Double Door 12" Deep

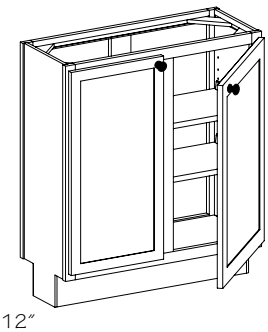

Specify R or L - hinging for kitchen side
34 1/2" High - two shelves

❍ **PB2412 BUTT•FH**
PB2712 (Butt)•FH
PB3012 •FH
PB3012 BUTT•FH
PB3312 •FH
PB3312 BUTT•FH
PB3612 •FH
PB3612 BUTT•FH
PB3912 •FH
PB4212 •FH
PB4512 •FH
PB4812 •FH
❍▲**PB4812 BUTT•FH**

40 1/2" High - three shelves

❍ **PB241240 BUTT•FH**
PB271240 (Butt)•FH
PB301240 •FH
PB301240 BUTT•FH
PB331240 •FH
PB331240 BUTT•FH
PB361240 •FH
PB361240 BUTT•FH

❍ Change Width (CW) option ***not*** available
▲ Two pair of butt doors

- Adjustable shelves

☆ Glass inserts not available on ends

●	PE		IF
●	APC		TWR
●	APFC	●	WR
●	FPEB	●	XS
●	MI		XSG
●	DE	☆	GD
	OE	●	RTK
●	AD_E	❖	RTKP
☆	CW	●	VTK
●	RD		TKD
●	CH		

Base Three Drawer

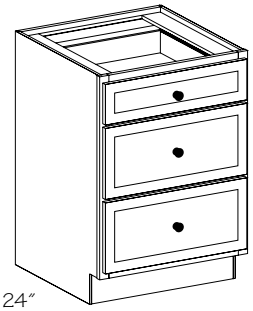

BD12 •3
❄ **BD15 •3**
❄ **BD18 •3**
❄ **BD21 •3**
❄ **BD24 •3**
BD27 •3
BD30 •3
BD33 •3
BD36 •3
BD39 •3
BD42 •3

❄ Deep drawer(s) will accept optional Bread Box (BB) or Bread Box Kit (BBK)

- One standard drawer
- Two deep drawers

●	PE		IF
●	APC	●	TWR
●	APFC	●	WR
●	FPEB	●	XS
	MI		XSG
●	DE		GD
	OE	●	RTK
●	AD_E	●	RTKP
●	CW	●	VTK
●	RD	●	TKD
	CH		

Base Four Drawer

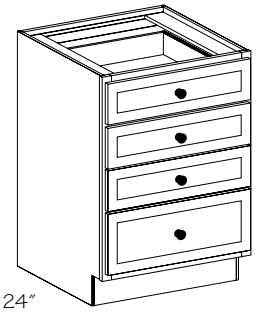

BD12
❄ **BD15**
❄ **BD18**
❄ **BD21**
❄ **BD24**
BD27
BD30
BD33
BD36

❄ Deep drawer(s) will accept optional Bread Box (BB) or Bread Box Kit (BBK)

- Three standard height drawers
- One deep bottom drawer

●	PE		IF
●	APC	●	TWR
●	APFC	●	WR
●	FPEB	●	XS
	MI		XSG
●	DE		GD
	OE	●	RTK
●	AD_E	●	RTKP
●	CW	●	VTK
●	RD	●	TKD
	CH		

Bread Box Drawer

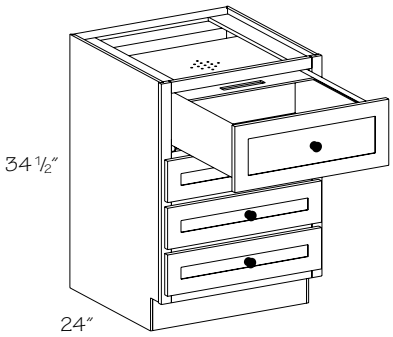

BBD15
BBD18
BBD21
BBD24

- Three standard height drawers
- One deep top drawer with factory installed Sliding Bread Box Lid (SBB)

●	PE		IF
●	APC		TWR
●	APFC	●	WR
●	FPEB	●	XS
	MI		XSG
●	DE		GD
	OE	●	RTK
●	AD_E	●	RTKP
	CW	●	VTK
	RD	●	TKD
	CH		

Base Pots and Pans Storage Two Drawer

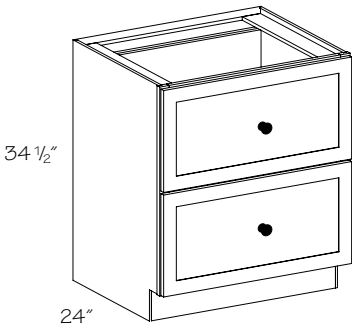

❍ **BPPS12 ▪2**
BPPS15 ▪2
BPPS18 ▪2
BPPS21 ▪2
BPPS24 ▪2
BPPS27 ▪2
BPPS30 ▪2
BPPS33 ▪2
BPPS36 ▪2
BPPS39 ▪2
BPPS42 ▪2

❍ Change Width (CW) option ***not*** available

- Two 10″ deep solid wood drawers
- Uses Whisper Touch™ Drawer Runners – Two Drawer Cabinets

☆ Minimum Reduced Depth (RD) is 21″

●	PE		IF
●	APC		TWR
●	APFC	●	WR
●	FPEB	●	XS
	MI		XSG
	DE		GD
	OE	●	RTK
●	AD_E	●	RTKP
☆	CW	●	VTK
☆	RD	●	TKD
	CH		

Base Pots and Pans Storage Three Drawer

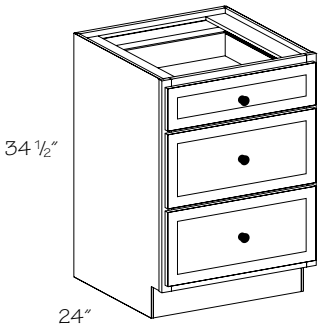

❊ **BPPS18**
❊ **BPPS21**
❊◆ **BPPS24**
◆ **BPPS27**
◆ **BPPS30**
◆ **BPPS33**
◆ **BPPS36**

❊ Deep drawer(s) will accept optional Bread Box (BB) or Bread Box Kit (BBK)
◆ Prep for Warming Drawer (PWD) option is available. See Construction Options section in this book

- One standard drawer
- Two deep drawers

●	PE		IF
●	APC	●	TWR
●	APFC	●	WR
●	FPEB	●	XS
	MI		XSG
●	DE		GD
	OE	●	RTK
●	AD_E	●	RTKP
●	CW	●	VTK
●	RD	●	TKD
	CH		

Base Pots and Pans Storage Four Drawer

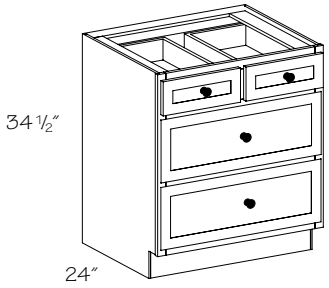

BPPS30 ▪4
BPPS36 ▪4

- Two standard drawers
- Two deep drawers
- Prep for Warming Drawer (PWD) option is available. See Construction Options section in this book

●	PE		IF
●	APC		TWR
●	APFC	●	WR
●	FPEB	●	XS
	MI		XSG
●	DE		GD
	OE	●	RTK
●	AD_E	●	RTKP
●	CW	●	VTK
●	RD	●	TKD
	CH		

Base Deep Drawer Combination

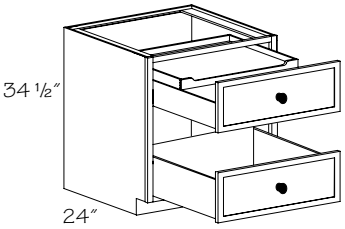

❍ **BDDC18 ▪2▪TT**
BDDC24 ▪2▪TT
BDDC30 ▪2▪TT
BDDC36 ▪2▪TT

❍ Change Width (CW) option ***not*** available

- One 7″ deep solid wood drawer
- One 10″ deep solid wood drawer
- One 3″ deluxe rollout tray above the top drawer
- Uses Whisper Touch™ Drawer Runners – Two Drawer Cabinets
- Adjustable Drawer Dividers (ADD) ***not*** available in top drawer

☆ Minimum Reduced Depth (RD) is 21″

●	PE		IF
●	APC		TWR
●	APFC	●	WR
●	FPEB	●	XS
	MI		XSG
●	DE		GD
	OE	●	RTK
●	AD_E	●	RTKP
☆	CW	●	VTK
☆	RD	●	TKD
	CH		

New

Base Deep Drawer Combination - Top & Bottom Tray

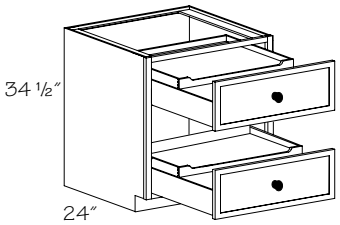

❍ **BDDC18 ▪2▪TBT**
BDDC24 ▪2▪TBT
BDDC30 ▪2▪TBT
BDDC36 ▪2▪TBT

❍ Change Width (CW) option ***not*** available

Grey color coding indicates new product, size or code.

- Two 7″ solid wood drawers
- 3″ deluxe rollout tray above the top and bottom drawer
- Uses Whisper Touch™ Drawer Runners
- Adjustable Drawer Dividers (ADD) ***not*** available

☆ Minimum Reduced Depth (RD) is 21″

●	PE		IF
●	APC		TWR
●	APFC	●	WR
●	FPEB	●	XS
	MI		XSG
●	DE		GD
	OE	●	RTK
●	AD_E	●	RTKP
☆	CW	●	VTK
☆	RD	●	TKD
	CH		

CoreGuard® Sink Base

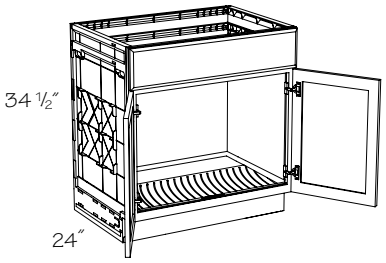

SB24 BUTT▪CG
SB27 (Butt)▪CG
SB30 BUTT▪CG
SB33 BUTT▪CG
SB36 BUTT▪CG

Opening Sizes		
Cabinet	Top Width	Top Depth
SB24BUTT.CG	21 1⁄16″	22 3⁄8″
SB27.CG	24 1⁄16″	22 3⁄8″
SB30BUTT.CG	27 1⁄16″	22 3⁄8″
SB33BUTT.CG	30 1⁄16″	22 3⁄8″
SB36BUTT.CG	33 1⁄16″	22 3⁄8″

- Easy to clean and durable sink base helps protect the cabinetry from everyday leaks and spills
- Back, end and bottom panels are made of an engineered polymer material
- Bottom panel slants 1º toward front of cabinet and has raised ribs to slightly elevate stored items
- Decorative end panel required for end of peninsula or island. ***Not*** included, order separately
- No shelf
- One full-width false drawer front above doors
- Use CoreGuard® Panel Backer in the paneling section to resolve cutting and installation errors
- Optional Door Storage Unit (SBDSU) is available
- Optional Utensil Trays (UT and SUT) are available
- Will ***not*** accommodate Roll-out Trays (ROT)
- Includes a Touch-Up Kit (TUK)

	PE		IF
	APC	●	TWR
	APFC		WR
	FPEB	●	XS
	MI		XSG
	DE		GD
	OE		RTK
	AD_E		RTKP
	CW		VTK
	RD		TKD
	CH		

Caution: For an island/peninsula installation, the CoreGuard® Sink cabinet ***must*** have a minimum of one (1) 15″ cabinet or larger installed adjacent to it in order for the island/peninsula to have adequate structural stability. Accessories ***cannot*** be installed on end panels, back or floor of the cabinet

Wood Sink Base

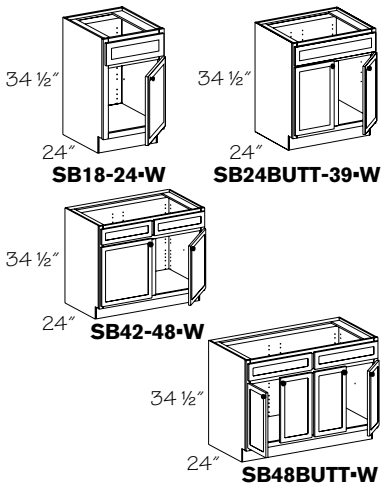

Specify R or L - One Drawer Front

- ❍ **SB18 R or L▪W**
- **SB21 R or L▪W**
- **SB24 R or L▪W**
- ❍ **SB24 BUTT▪W**
- **SB27 (Butt)▪W**
- **SB30 BUTT▪W**
- **SB33 BUTT▪W**
- **SB36 BUTT▪W**
- ◆ **SB39 ▪W**

Two Drawer Fronts

- ◆ **SB42 ▪W**
- ◆† **SB45 ▪W**
- ◆† **SB48 ▪W**
- ❍◆† ■ **SB48 BUTT▪W**

❍ Change Width (CW) option ***not*** available
◆ Deluxe Dovetailed full-width Trays (DXFWT) ***not*** available
† Toe Kick Drawer (TKD) option ***not*** available
■ Glass inserts ***not*** available on ends

- No shelf
- False drawer front(s)
- Optional Door Storage Unit (SBDSU) is available
- Optional Utensil Trays (UT and SUT) are available
- Includes a Touch-Up Kit (TUK)
- Use Full-Height Kitchen (FHK) option to achieve a full-height door look

☆ Operational End (OE) is ***not*** available with Reduced Depth (RD) options

● PE	IF
● APC	● TWR
● APFC	● WR
● FPEB	● XS
● MI	● XSG
● DE	☆ GD
☆ OE	● RTK
● AD_E	● RTKP
☆ CW	● VTK
● RD	☆ TKD
● CH	

When you need an inverted frame for a sink base cabinet, consider using a regular base with a drawer instead of a sink base if plumbing allows. This way you get a working drawer at the bottom of your cabinet.

Remember, a cabinet designated BUTT or (Butt) has no center stile. When you see the word BUTT in all capitals, it ***must*** be included as part of your ordering nomenclature, a (Butt) in parentheses is for your information and isn't required on an order form

Wood Sink Base 27" Deep

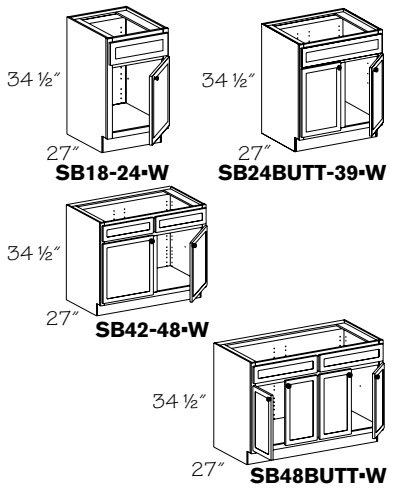

Specify R or L - One Drawer Front

- ❍ **SB1827 R or L▪W**
- **SB2127 R or L▪W**
- **SB2427 R or L▪W**
- ❍ **SB2427 BUTT▪W**
- **SB2727 (Butt)▪W**
- **SB3027 BUTT▪W**
- **SB3327 BUTT▪W**
- **SB3627 BUTT▪W**
- **SB3927 ▪W**

Two Drawer Fronts

- **SB4227 ▪W**
- **SB4527 ▪W**
- **SB4827 ▪W**
- ❍ ■ **SB4827 BUTT▪W**

❍ Change Width (CW) option ***not*** available
■ Glass inserts ***not*** available on ends

- No shelf
- False drawer front(s)
- Optional Door Storage Unit (SBDSU) is available
- Optional Utensil Trays (UT and SUT) are available
- Will ***not*** accommodate Roll-out Trays (ROT)
- Includes a Touch-Up Kit (TUK)
- Use Full-Height Kitchen (FHK) option to achieve a full-height door look

☆ Operational End (OE) is ***not*** available with Reduced Depth (RD) options

● PE	IF
● APC	● TWR
● APFC	● WR
● FPEB	● XS
● MI	● XSG
DE	☆ GD
☆ OE	● RTK
AD_E	● RTKP
☆ CW	● VTK
● RD	TKD
● CH	

Sink Base w/Roll-Out Trays

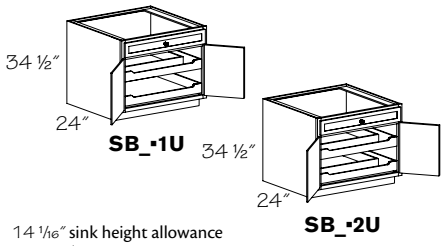

One Deep Full Width tray, one deep "U" shaped Tray

SB36 ▪2SBROT▪1U
SB39 ▪2SBROT▪1U
SB42 ▪2SBROT▪1U

Two Deep "U" shaped Trays

SB36 ▪2SBROT▪2U
SB39 ▪2SBROT▪2U
SB42 ▪2SBROT▪2U

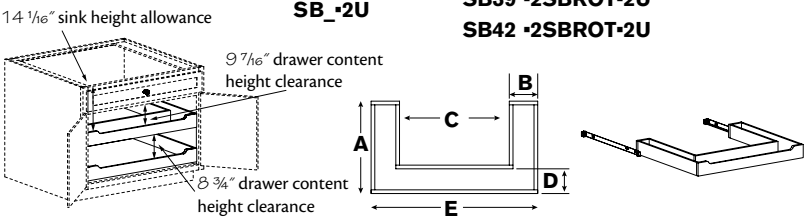

Cabinet	Opening	A	B	C	D	E
SB36.2SBROT	33"	17 23/32"	5 7/16"	22 1/2"	4"	32"
SB39.2SBROT	36"	17 23/32"	5 7/16"	25 1/2"	4"	35"
SB42.2SBROT	39"	17 23/32"	5 7/16"	28 1/2"	4"	38"

- Two door cabinet with top false drawer front; two Sink Base Roll-out Trays (ROT) in the door section
- "U" shaped drawers are 21" Deep; 4" High
- Full Width Deep drawers are 21" Deep; 4" High
- Roll-out Trays (ROT) are 5/8" solid wood dovetailed sides with 3/16" plywood bottom, notched front and full extension runners with integrated buffer
- SB36 is designed for a 30" sink (drawer clearance - 21 1/16")
- SB39 is designed for a 33" sink (drawer clearance - 24 1/16")
- SB42 is designed for a 36" sink (drawer clearance - 21 1/16")
- Cabinets are not designed for sinks with drains that are offset towards the outer edges. Be sure to check sink manufacturer's specifications for drain placement and clearance requirements. Also consider clearance for disposals and other under-sink appliances

●	PE		IF
●	APC	●	TWR
●	APFC	●	WR
●	FPEB	●	XS
●	MI		XSG
●	DE	●	GD
	OE	●	RTK
●	AD_E	●	RTKP
	CW	●	VTK
	RD	●	TKD
	CH		

Sink Base w/Roll-Out Trays and Utensil Tray

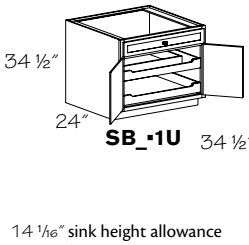

One Standard Full Width Tray, One "U" shaped Tray

SB36 ▪SUT▪2SBROT▪1U
SB39 ▪SUT▪2SBROT▪1U
SB42 ▪SUT▪2SBROT▪1U

Two "U" Shaped Trays

SB36 ▪SUT▪2SBROT▪2U
SB39 ▪SUT▪2SBROT▪2U
SB42 ▪SUT▪2SBROT▪2U

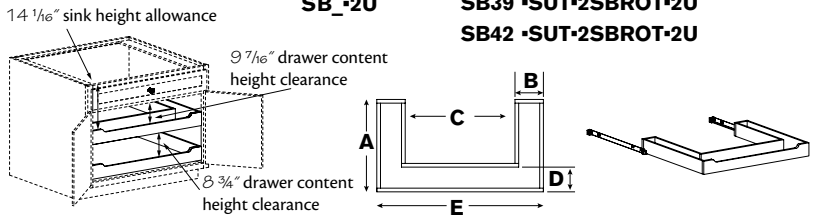

Cabinet	Opening	A	B	C	D	E
SB36.SUT.2SBROT	33"	17 23/32"	5 7/16"	22 1/2"	4"	32"
SB39.SUT.2SBROT	36"	17 23/32"	5 7/16"	25 1/2"	4"	35"
SB42.SUT.2SBROT	39"	17 23/32"	5 7/16"	28 1/2"	4"	38"

- Two door cabinet with top stainless utensil tray; two Sink Base Roll-out Trays (ROT) in the door section
- "U" shaped drawers are 21" Deep; 4" High
- Full Width Deep drawers are 21" Deep; 4" High
- Roll-out Trays (ROT) are 5/8" solid wood dovetailed sides with 3/16" plywood bottom, notched front and full extension runners with integrated buffer
- SB36 is designed for a 30" sink (drawer clearance - 21 1/16")
- SB39 is designed for a 33" sink (drawer clearance - 24 1/16")
- SB42 is designed for a 36" sink (drawer clearance - 21 1/16")
- Cabinets are not designed for sinks with drains that are offset towards the outer edges. Be sure to check sink manufacturer's specifications for drain placement and clearance requirements. Also consider clearance for disposals and other under-sink appliances

●	PE		IF
●	APC	●	TWR
●	APFC	●	WR
●	FPEB	●	XS
●	MI		XSG
●	DE	●	GD
	OE	●	RTK
●	AD_E	●	RTKP
	CW	●	VTK
	RD	●	TKD
	CH		

New

Sink Base Wastebasket

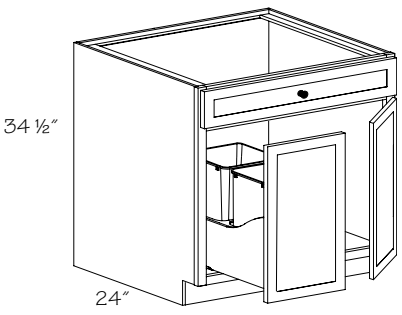

Right Side

❄✣ SBWBR30 BUTT▪W
❄✣ SBWBR33 BUTT▪W
❄▲ SBWBR36 BUTT▪W

Left Side

◆✣ SBWBL30 BUTT▪W
◆✣ SBWBL33 BUTT▪W
◆▲ SBWBL36 BUTT▪W

❄ ***Not*** available with Operational End (OE) right
◆ ***Not*** available with Operational End (OE) left
✣ One 35 qt. capacity white basket
▲ Two 35 qt. capacity white baskets

Grey color coding indicates new product, size or code.

- Sink ***must*** be a single bowl with an offset drain opposite the wastebasket
- Sink ***cannot*** be deeper than 8" for under mount applications and 9" for top mount applications because of wastebasket interference
- No shelf
- False Front
- Includes a Touch-Up Kit (TUK)

●	PE		IF
●	APC	●	TWR
●	APFC	●	WR
●	FPEB	●	XS
	MI		XSG
●	DE		GD
☆	OE	●	RTK
●	AD_E	●	RTKP
	CW	●	VTK
	RD	●	TKD
	CH		

Sink Base–Clipped and Fluted Clipped Corners

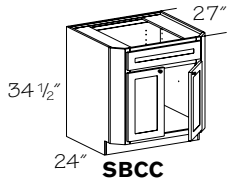

SBCC

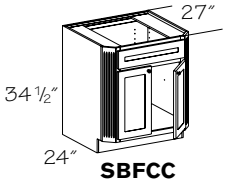

SBFCC

Clipped Corners

SBCC3027 BUTT
SBCC3327 BUTT
SBCC3627 BUTT
SBCC4227 BUTT

Fluted Clipped Corners

▲ **SBFCC3027 BUTT**
▲ **SBFCC3327 BUTT**
▲ **SBFCC3627 BUTT**
▲ **SBFCC4227 BUTT**

▲ ***Not*** available in Morristown; Melrose and Putnam supplied plain sawn

- No shelf
- False drawer front
- Optional Door Storage Unit (SBDSU) is available
- Optional Utensil Trays (UT and SUT) are available
- Angled stiles extend 3″ each side
- Nominal width is overall cabinet width. Order Example: SBCC3027BUTT is 30″ wide
- Factory installed Roll-out Trays (ROT) are ***not*** available
- Can be used as corner sink by butting up adjacent cabinets to the clipped corner area
- Includes a Touch-Up Kit (TUK)
- Use Full-Height Kitchen (FHK) option to achieve a full-height door look

☆ Minimum Reduced Depth (RD) is 15″

● PE	IF
● APC	● TWR
● APFC	WR
● FPEB	XS
MI	XSG
DE	● GD
OE	RTK
AD_E	RTKP
CW	● VTK
☆ RD	TKD
CH	

Sink Base Multi-Storage Cabinet

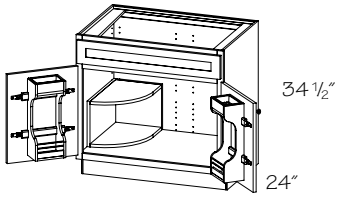

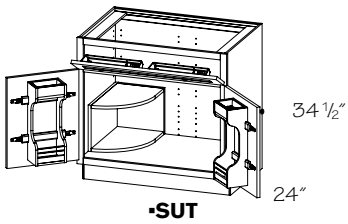

▪SUT

SBMS30 BUTT
SBMS33 BUTT
SBMS36 BUTT
◆ **SBMS39**
◆ **SBMS42**

With Stainless Utensil Tray

SBMS30 BUTT▪SUT
SBMS33 BUTT▪SUT
SBMS36 BUTT▪SUT
◆ **SBMS39 ▪SUT**
◆ **SBMS42 ▪SUT**

◆ 3″ center stile

- No shelf
- False drawer front(s)
- Includes two Door Storage Units (SBDSU) and one Multi-Storage Shelf (SBMSSK)
- Sink Base Multi-Storage Shelf Kit (SBMSSK) shipped separately

☆ Sink Base Multi-Storage Shelf Kit (SBMSSK) is Natural Birch plywood and does ***not*** come matching

- Includes a Touch-Up Kit (TUK)

● PE	IF
● APC	● TWR
● APFC	● WR
● FPEB	● XS
☆ MI	XSG
● DE	GD
OE	● RTK
● AD_E	● RTKP
CW	● VTK
RD	● TKD
CH	

Sink Base Drawer

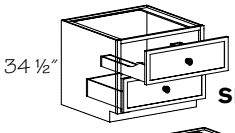

SB_▪2D1U

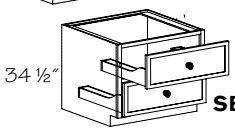

SB_▪2D2U

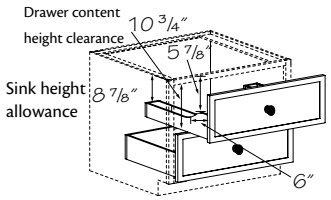

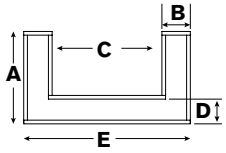

One "U" shaped Drawer, one full width Drawer

SB36 ▪2D1U
SB39 ▪2D1U
SB42 ▪2D1U

Two "U" shaped Drawers

SB36 ▪2D2U
SB39 ▪2D2U
SB42 ▪2D2U

- "U" shaped drawers are 7″ to 4″ scoop, 21″ deep
- Full width drawer is 7″ high, 21″ deep (***Not*** "U" shaped)
- SB36 is designed for a 30″ sink (drawer clearance - 21 1/16″)
- SB39 is designed for a 33″ sink (drawer clearance - 24 1/16″)
- SB42 is designed for a 36″ sink (drawer clearance - 21 1/16″)
- Cabinets are not designed for sinks with drains that are offset towards the outer edges. Be sure to check sink manufacturer's specifications for drain placement and clearance requirements. Also consider clearance for disposals and other under-sink appliances

● PE	IF
● APC	TWR
● APFC	● WR
● FPEB	● XS
● MI	XSG
● DE	GD
OE	● RTK
● AD_E	● RTKP
CW	● VTK
RD	● TKD
CH	

Cabinet	Opening	A	B	C	D	E
SB36.2D(1U&2U)	33"	17 23/32"	5 7/16"	21 5/9"	4"	32 4/9"
SB39.2D(1U&2U)	36"	17 23/32"	5 7/16"	26"	4"	35 4/9"
SB42.2D(1U&2U)	39"	17 23/32"	5 7/16"	29"	4"	38 4/9"

Deep Sink Base

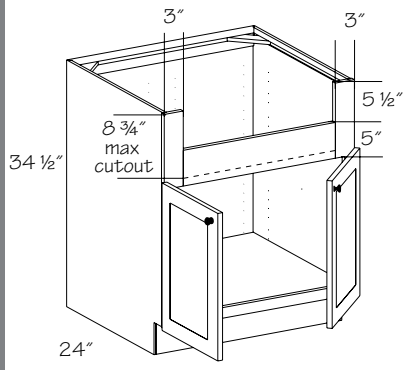

DSB30 BUTT
DSB33 BUTT
DSB36 BUTT
DSB39 BUTT
DSB42 BUTT

- 3″ stiles are routed to 1 1/2″ in the door area
- Includes a Touch-Up Kit (TUK)
- ***Note:*** Be sure to follow manufacturer's specifications to ensure proper sink fit



To avoid cutting the side walls of a sink base cabinet, make sure your sink base cabinet is at least 2 1/2″ wider than the overall width of your sink. If your overall front-to-back sink depth is 22 1/2″ or greater use a 27″ deep sink base.

● PE	IF
● APC	TWR
● APFC	● WR
● FPEB	● XS
● MI	XSG
DE	● GD
OE	● RTK
● AD_E	● RTKP
● CW	● VTK
● RD	● TKD
CH	

Deep Sink Base 27″ Deep

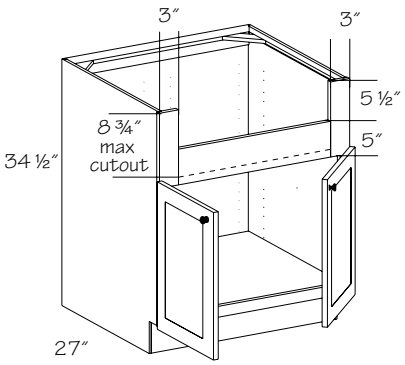

DSB3027 BUTT
DSB3327 BUTT
DSB3627 BUTT

- Will ***not*** accommodate Roll-out Trays (ROT)
- Maximum cutout height is 8 3/4″
- 3″ stiles are routed to 1 1/2″ in the door area
- Includes a Touch-Up Kit (TUK)
- ***Note:*** Be sure to follow manufacturer's specifications to ensure proper sink fit

●	PE		IF
●	APC		TWR
●	APFC	●	WR
●	FPEB	●	XS
●	MI		XSG
	DE	●	GD
	OE	●	RTK
	AD_E		RTKP
●	CW	●	VTK
●	RD		TKD
	CH		

New

Deep Sink Base Extended

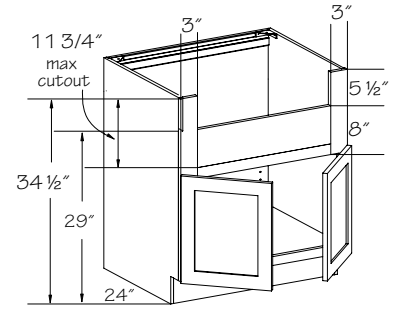

DSBE30 BUTT
DSBE33 BUTT
DSBE36 BUTT
DSBE39 BUTT
DSBE42 BUTT

Grey color coding indicates new product, size or code.

- 3″ stiles are routed to 1 1/2″ in the door area
- Maximum cutout height is 11 3/4″
- Includes a Touch-Up Kit (TUK)
- ***Note:*** Be sure to follow manufacturer's specifications to ensure proper sink fit

●	PE		IF
●	APC		TWR
●	APFC	●	WR
●	FPEB	●	XS
●	MI		XSG
	DE	●	GD
	OE	●	RTK
●	AD_E	●	RTKP
●	CW	●	VTK
●	RD	●	TKD
	CH		

Apron Sink Base Extended

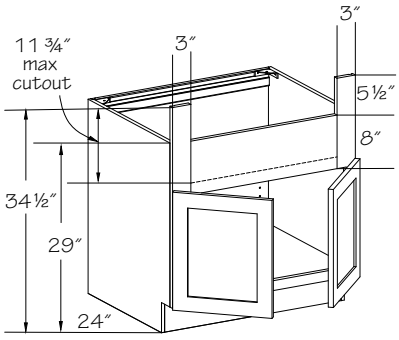

APSBE30 BUTT
APSBE33 BUTT
APSBE36 BUTT
APSBE39 BUTT
APSBE42 BUTT
† **APSBE45 BUTT**
† **APSBE48 BUTT**

† Toe Kick Drawer (TKD) option ***not*** available

Grey color coding indicates new product, size or code.

- No shelf
- 3″ top stiles
- Maximum cutout height is 11 3/4″
- Additional support rails are required–refer to sink manufacturer
- Includes a Touch-Up Kit (TUK)
- All Plywood Furniture Construction (APFC) will be supplied when All Plywood Construction (APC) is selected; cabinets have standard furniture plywood ends
- ***Note:*** Be sure to follow manufacturer's specifications to ensure proper sink fit

●	PE		IF
●	APC		TWR
☆	APFC	●	WR
❖	FPEB	●	XS
●	MI		XSG
	DE	●	GD
	OE		RTK
	AD_E		RTKP
●	CW	●	VTK
●	RD	☆	TKD
	CH		

Apron Sink Base Extended 27″ Deep

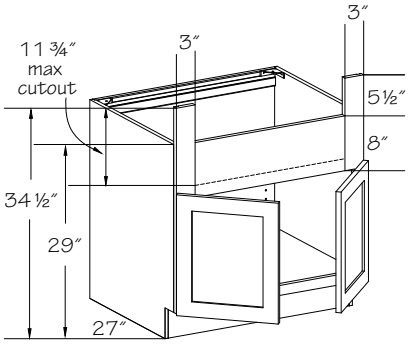

APSBE3027 BUTT
APSBE3327 BUTT
APSBE3627 BUTT
APSBE3927 BUTT
APSBE4227 BUTT
APSBE4527 BUTT
APSBE4827 BUTT

Grey color coding indicates new product, size or code.

- No shelf
- 3″ top stiles
- Maximum cutout height is 11 3/4″
- Additional support rails are required–refer to sink manufacturer
- Includes a Touch-Up Kit (TUK)
- Roll-out Trays (ROT) are ***not*** available
- All Plywood Furniture Construction (APFC) will be supplied when All Plywood Construction (APC) is selected; cabinets have standard furniture plywood ends
- ***Note:*** Be sure to follow manufacturer's specifications to ensure proper sink fit

●	PE		IF
●	APC		TWR
	APFC	●	WR
❖	FPEB	●	XS
●	MI		XSG
	DE	●	GD
	OE		RTK
	AD_E		RTKP
●	CW	●	VTK
●	RD		TKD
	CH		

We recommend using a Filler Extension (FE) on 27″ deep cabinets if adjacent cabinetry will ***not*** be pulled flush to the Sink Base Cabinetry

Sink Base Blind Corner

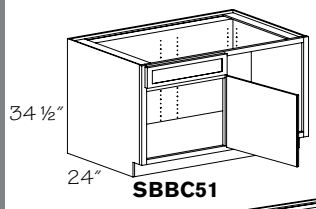

SBBC51

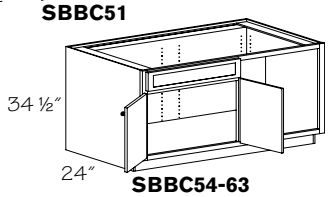

SBBC54-63

Specify R or L

SBBC51 R or L
SBBC54 R or L
SBBC57 R or L
SBBC60 R or L
SBBC63 R or L

- Blind panel (stile) is 8" wide
- Blind opening is covered with an unfinished panel
- R or L indicates blind
- Right blind shown
- Door is hinged from blind panel
- Filler included
- Overlay Panel for Base Blind Corner (OPWBC) ***must*** be ordered separately
- False drawer front
- Factory installed Roll-out Trays (ROT) are ***not*** available

●	PE		IF
●	APC		TWR
●	APFC	●	WR
●	FPEB	●	XS
●	MI		XSG
●	DE	●	GD
	OE	●	RTK
●	AD_E	●	RTKP
	CW	●	VTK
●	RD		TKD
●	CH		

Sink Base Blind Corner		½" Overlay						Full Overlay					
Cabinet	Sink Width (if centered with doors)	Wall Space "A" Min ★	Wall Space "A" Max.	Exposed Front "B" Min ★	Exposed Front "B" Max	Door Open "C"	Cab. Width	Wall Space "A" Min ★	Wall Space "A" Max	Exposed Front "B" Min ★	Exposed Front "B" Max	Door Open "C"	Cab. Width
SBBC51	16⅞"	49 ½"	52 ¾"	25 ½"	28 ¾"	21"	48"	50 ¼"	53 ¾"	26 ¼"	29 ¾"	21"	48"
SBBC54*	19⅞"	52 ½"	55 ¾"	28 ½"	31 ¾"	24"	51"	53 ¼"	56 ¾"	29 ¼"	32 ¾"	24"	51"
SBBC57*	22⅞"	55 ½"	58 ¾"	31 ½"	34 ¾"	27"	54"	56 ¼"	59 ¾"	32 ¼"	35 ¾"	27"	54"
SBBC60*	25⅞"	58 ½"	61 ¾"	34 ½"	37 ¾"	30"	57"	59 ¼"	62 ¾"	35 ¼"	38 ¾"	30"	57"
SBBC63*	28⅞"	61 ½"	64 ¾"	37 ½"	40 ¾"	33"	60"	62 ¼"	65 ¾"	38 ¼"	41 ¾"	33"	60"

★ Dimensions "A" and "B" minimum requirements include optional decorative hardware clearance. You may deduct 1 1/4" if hardware is not used.
✻ Cabinets will have BUTT doors

Sink Front

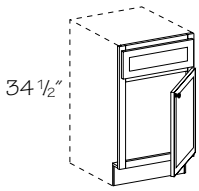

SF18-24

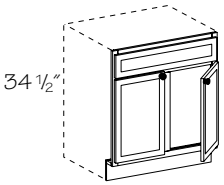

SF24BUTT-39

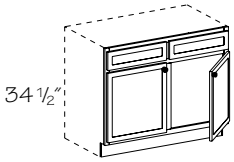

SF42-48

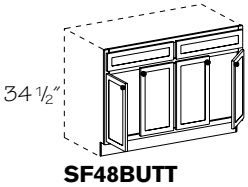

SF48BUTT

Specify R or L
One Drawer Front

SF18 R or L
SF21 R or L
SF24 R or L
❍ **SF24 BUTT**
SF27 (Butt)
SF30
SF30 BUTT
SF33
SF33 BUTT
SF36
SF36 BUTT
SF39

Two Drawer Fronts

SF42
SF45
SF48
▲❍**SF48 BUTT**

❍ Change Width (CW) option ***not*** available
▲ Two pair of butt doors

- Includes floor; shipped loose
- Optional Utensil Trays (UT and SUT) are available
- Unit is ***not*** trimmable
- Includes a Touch-Up Kit (TUK)
- Use Full-Height Kitchen (FHK) option to achieve a full-height door look

	PE		IF
●	APC	●	TWR
	APFC	●	WR
	FPEB	●	XS
	MI		XSG
	DE	●	GD
	OE		RTK
	AD_E		RTKP
☆	CW		VTK
	RD		TKD
●	CH		

Sink Base Angle

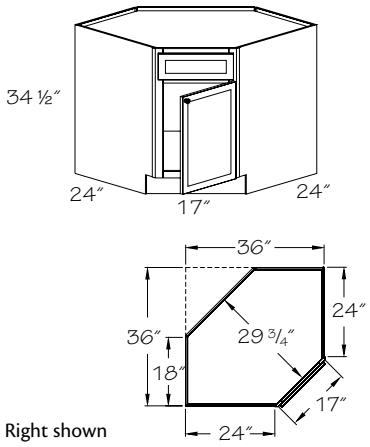

Right shown

Specify R or L

SBA36 R or L

- No shelf
- False drawer front
- Optional Utensil Trays (UT and SUT) are available
- Includes a Touch-Up Kit (TUK)
- Back Options (BEB and VGRB) ***not*** available
- Contrasting Back Options (CBEB, CPLB, CVGR) ***not*** available
- Use Full-Height Kitchen (FHK) option to achieve a full-height door look
- ***Note:*** Full overlay door styles use a 1/2" overlay hinge
- ***Note:*** Will ***not*** accommodate double bowl sink

PE	IF
● APC	● TWR
● APFC	● WR
● FPEB	XS
● MI	XSG
DE	● GD
OE	● RTK
● AD_E	RTKP
CW	● VTK
RD	TKD
● CH	

When using a corner sink in your design, it is recommended to install at least a 15" cabinet between the corner sink and dishwasher. This will allow a comfortable space to load and unload the unit.

Sink Front Angle

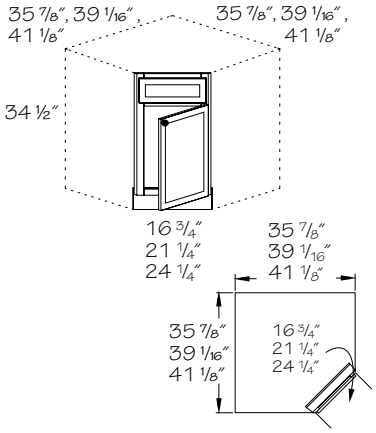

Specify R or L

❍ **SFA36 R or L**

SFA39 R or L

▲ **SFA42 R or L**

❄ **SFA42 BUTT**

❍ Change Width (CW) option ***not*** available

▲ Available in full overlay door styles only

❄ ***Not*** available in full overlay door styles

- Includes 48" x 48" x 1/2" floor; floor shipped separately
- Optional Utensil Trays (UT and SUT) are available
- Toe kick shipped unattached
- Includes a Touch-Up Kit (TUK)
- Use Full-Height Kitchen (FHK) option to achieve a full-height door look
- ***Note:*** Full overlay door styles use a 1/2" overlay hinge

PE	IF
● APC	● TWR
APFC	● WR
FPEB	XS
MI	XSG
DE	● GD
OE	RTK
AD_E	RTKP
☆ CW	● VTK
RD	TKD
● CH	

Sink Front Corner 90°

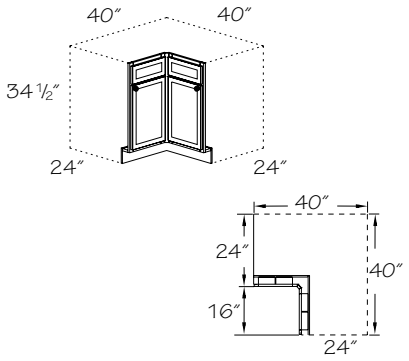

SFC40

- Optional Utensil Tray Kit (UTK) is available
- Includes a Touch-Up Kit (TUK)
- Use Full-Height Kitchen (FHK) option to achieve a full-height door look
- ***Note:*** Includes two 16" Cabinet Front Only (CFO), 1–1 1/4" solid spacer and 48" x 48" x 1/2" floor. Floor Shipped separately

PE	IF
● APC	● TWR
APFC	● WR
FPEB	● XS
MI	XSG
DE	● GD
OE	RTK
AD_E	RTKP
CW	● VTK
RD	TKD
CH	

Base Appliance Cabinets

BMC	30	24	46
code	width	depth	height

Construction Options and Modifications

❖ Included as standard
● Available with an upcharge
☆ Available with exceptions
(Blank) ***Not*** available

When BUTT is in all capitals, it ***must*** be included as part of your ordering nomenclature. A (Butt) in parentheses is for your information and isn't required on an order form.

Material dimensions listed may vary slightly from actual dimensions of the product.

Specifications subject to change without notice.

PE	Plywood Ends
APC	All Plywood Construction
APFC	All Plywood Furniture Construction
FPEB	Furniture Plywood Ends
MI	Matching Interior
DE	Integrated Decorative End
OE	Operational End
AD_E	Attached Decorative End
CW	Change Width
RD	Reduced Depth
CH	Change Height
IF	Inverted Frame
TWR	Top Wide Rail
WR	Wide Bottom Rail
XS	Extended Stile
GD	Glass Doors
RTK	Recessed Toe Kick
RTKP	Recessed Toe Kick Peninsula
VTK	Void Toe Kick

Base Oven Cabinet Universal

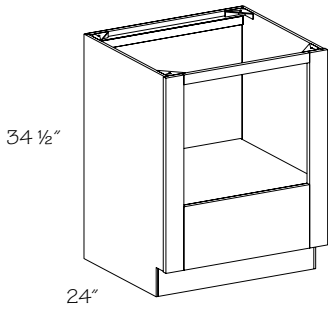

❍ **BOCU24**
BOCU27
BOCU30
BOCU33
❄ **BOCU36**
❄ **BOCU39**
❄ **BOCU42**

❍ Change Width (CW) option ***not*** available
❄ 4 1/2″ stiles

- Adjustable plywood floor
- 3″ stiles
- For undercounter mounting of single ovens
- Contrasting Back Options (CBEB, CPLB, CVGR) ***not*** available
- Change Height (CH) and Change Width (CW) changes will occur in the cabinet opening - stiles and rails will ***not*** change

● PE	● CH
● APC	IF
● APFC	TWR
● FPEB	● WR
● MI	● XS
DE	GD
OE	RTK
● AD_E	RTKP
☆ CW	● VTK
● RD	

Cabinet Width	Min. Width	Max. Width	Min. Height	Max.* Height
24″	18″	22″	18 ¾″	28 ¾″
27″	21″	25″	18 ¾″	28 ¾″
30″	24″	28″	18 ¾″	28 ¾″
33″	27″	31″	18 ¾″	28 ¾″
36″	27″	34″	18 ¾″	28 ¾″
39″	30″	37″	18 ¾″	28 ¾″
42″	33″	40″	18 ¾″	28 ¾″

*Includes removal of top rail

Heat Shield

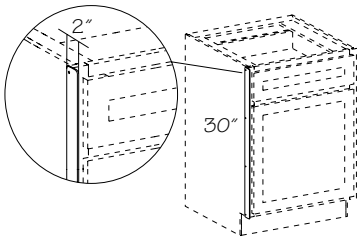

HSD

- 1/16″ thick
- Two clear acrylic heat shields with installation screws
- Recommended to shield Thermofoil and Foil door styles from adjacent oven heat
- Required for warranty on Foil door styles

PE	CH
APC	IF
APFC	TWR
FPEB	WR
MI	XS
DE	GD
OE	RTK
AD_E	RTKP
CW	VTK
RD	

Remember, when ordering Foil doors, to order a Heat Shield(s) (HSD) to apply to the base cabinet(s) adjacent to the oven.

Range Base

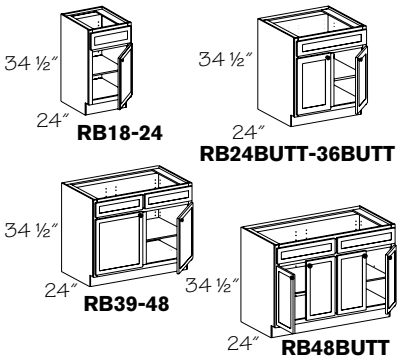

Specify R or L
One Drawer Front

- ❍ **RB18 R or L**
- **RB21 R or L**
- **RB24 R or L**
- ❍ **RB24 BUTT**
- **RB27 (Butt)**
- **RB30**
- **RB30 BUTT**
- **RB33**
- **RB33 BUTT**
- **RB36**
- **RB36 BUTT**

Specify R or L
Two Drawer Fronts

- ◆ **RB39**
- ◆ **RB42**
- ◆† **RB45**
- ◆† **RB48**
- ◆❍† ■ **RB48 BUTT**

❍ Change Width (CW) option ***not*** available
◆ Deluxe Dovetailed full-width Trays (DXFWT) ***not*** available
† Toe Kick Drawer (TKD) option ***not*** available
■ Glass inserts ***not*** available on ends

- One adjustable shelf
- False drawer front(s)
- ☆ Operational End (OE) is ***not*** available with Reduced Depth (RD) options

● PE	● CH
● APC	IF
● APFC	● TWR
● FPEB	● WR
● MI	● XS
● DE	☆ GD
☆ OE	● RTK
● AD_E	● RTKP
☆ CW	● VTK
● RD	

Range Base 27" Deep

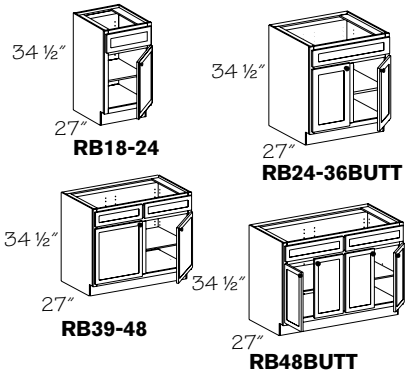

Specify R or L
One Drawer Front

- ❍ **RB1827 R or L**
- **RB2127 R or L**
- **RB2427 R or L**
- ❍ **RB2427 BUTT**
- **RB2727 (Butt)**
- **RB3027**
- **RB3027 BUTT**
- **RB3327**
- **RB3327 BUTT**
- **RB3627**
- **RB3627 BUTT**

Specify R or L
Two Drawer Fronts

- **RB3927**
- **RB4227**
- **RB4527**
- **RB4827**
- ❍ ■ **RB4827 BUTT**

❍ Change Width (CW) option ***not*** available
■ Glass inserts ***not*** available on ends

- One adjustable shelf
- False drawer front(s)
- Roll-out Trays (ROT) are ***not*** available

● PE	● CH
● APC	IF
● APFC	● TWR
● FPEB	● WR
● MI	● XS
DE	☆ GD
● OE	● RTK
AD_E	● RTKP
☆ CW	● VTK
● RD	

New

Deep Range Base

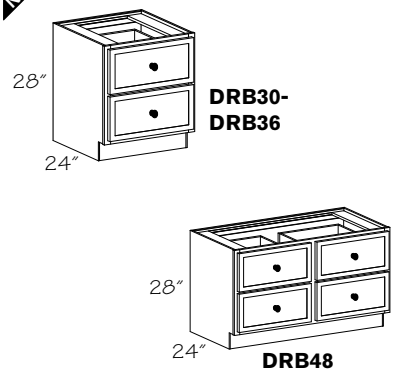

DRB302428
DRB362428
❍ **DRB482428**

❍ Change Width (CW) option ***not*** available

Grey color coding indicates new product, size or code.

- Accommodates cook tops, with or without front mounted controls
- Supplied with a 3" high filler to accommodate different range heights
- 7" deep drawers
- ☆ Minimum Reduced Depth (RD) is 21"
- ***Note:*** Be sure to follow manufacturer's specifications to ensure proper cooktop fit

● PE	CH
● APC	IF
● APFC	TWR
● FPEB	● WR
MI	● XS
DE	GD
OE	● RTK
AD_E	● RTKP
☆ CW	● VTK
☆ RD	

Down Draft Base

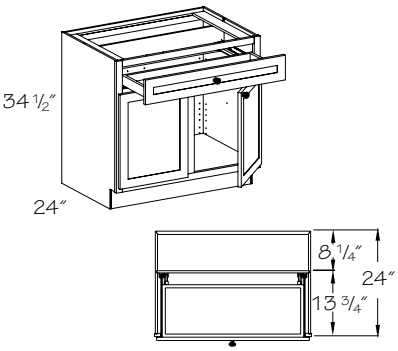

One Drawer Front

- **DDB30**
- **DDB30 BUTT**
- **DDB33**
- **DDB33 BUTT**
- **DDB36**
- **DDB36 BUTT**
- **DDB39**

Two Drawer Fronts

- **DDB42**
- † **DDB45**
- † **DDB48**
- ▲† **DDB48 BUTT**

† Toe Kick Drawer (TKD) option ***not*** available
▲ Two pair of butt doors

- Factory installed Roll-out Trays (ROT) are ***not*** available
- Top drawer will have scooped drawer option (STDW), 2 1/4" high, 11 13/16" deep drawer box
- ***Not*** available with any installed drawer box accessories
- ***Not*** available with Full-Height Door (FHK) option
- ***Note:*** Designed to be used with rear vent systems. ***Not*** designed for center vent systems

● PE	CH
● APC	IF
● APFC	TWR
● FPEB	● WR
● MI	● XS
DE	GD
OE	● RTK
● AD_E	● RTKP
CW	● VTK
RD	

Drop-in Range Panel

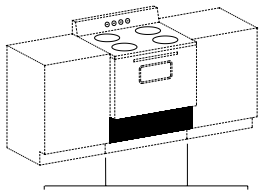

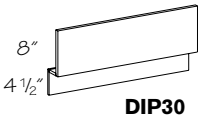

DIP30

DIP30

- Matching front panel may be trimmed to fit drop-in range
- Toe kick included

PE	CH
APC	IF
APFC	TWR
FPEB	WR
MI	XS
DE	GD
OE	RTK
AD_E	RTKP
CW	VTK
RD	

Base Microwave Cabinet 34 1/2" H w/Deep Bottom Drawer

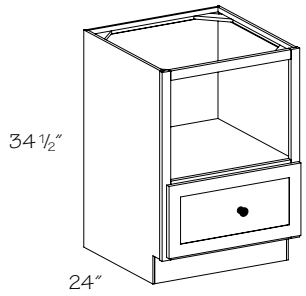

Opening: Width: 21"; Height: 16"

❍ **BMC242434**

Opening: Width: 24"; Height: 16"

BMC272434

Opening: Width: 27"; Height: 16"

BMC302434

❍ Change Width (CW) option ***not*** available

- Deep bottom drawer
- Designed for countertop style microwaves
- Change Height (CH) modified in open section of cabinet

When ordering an unfinished cabinet that has standard Matching Interior (MIV), you ***must*** use MIP, MIFP or FPEB to get a wood veneer matching interior. If the cabinet is Wood Veneer standard, ordered as All Plywood (APC) or with Furniture Plywood Ends (FPEB, APFC), wood veneer matching interior will be standard.

● PE	● CH
● APC	IF
● APFC	TWR
● FPEB	● WR
❖ MI	● XS
DE	GD
OE	● RTK
● AD_E	● RTKP
☆ CW	● VTK
● RD	

Base Microwave Cabinet 34 1/2" H w/Bottom Drawer–Extended Opening

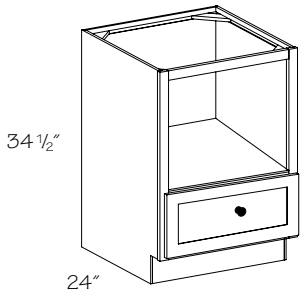

Opening: Width: 24"; Height: 19"

BMCE272434

Opening: Width: 27"; Height: 19"

BMCE302434

- 4" high drawer box
- Designed countertop style microwaves

When ordering unfinished cabinet that has standard Matching Interior (MIV), you ***must*** use MIP, MIFP or FPEB to get a wood veneer matching interior. If the cabinet is Wood Veneer standard, ordered as All Plywood (APC) or with Furniture Plywood Ends (FPEB, APFC), wood veneer matching interior will be standard.

● PE	● CH
● APC	IF
● APFC	TWR
● FPEB	● WR
❖ MI	● XS
DE	GD
OE	● RTK
● AD_E	● RTKP
● CW	● VTK
● RD	

Base Microwave Cabinet 46 1/2" H

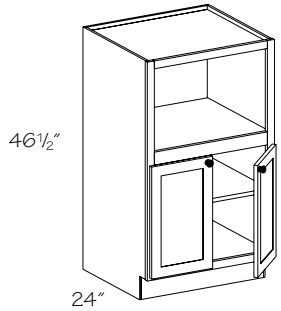

Opening: Width 21"; Height 16"

❍ **BMC242446**

Opening: Width 24"; Height 16"

BMC272446

Opening: Width 27"; Height 16"

BMC302446

❍ Change Width (CW) option ***not*** available

- One adjustable shelf
- Standard cabinet ceiling construction, finished top required
- Designed for countertop style microwaves
- Use Microwave Kit – Compact (CMCK) to reduce opening height to 13"

● PE	CH
● APC	IF
● APFC	TWR
● FPEB	● WR
❖ MI	● XS
DE	● GD
OE	● RTK
AD_E	● RTKP
☆ CW	● VTK
● RD	

Base Microwave Cabinet 46 1/2" H–Extended Opening

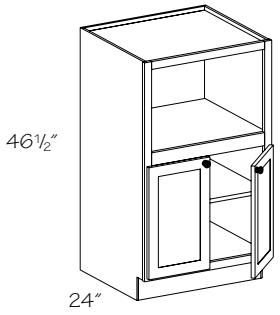

Opening: Width 21"; Height 19"

❍ **BMCE242446**

Opening: Width 24"; Height 19"

BMCE272446

Opening: Width 27"; Height 19"

BMCE302446

❍ Change Width (CW) option ***not*** available

- One adjustable shelf
- Standard cabinet ceiling construction, finished top required
- Designed for countertop style microwaves
- Use Microwave Kit – Compact (CMCK) to reduce opening height to 13"

●	PE		CH
●	APC		IF
●	APFC		TWR
●	FPEB	●	WR
❖	MI	●	XS
	DE	●	GD
	OE	●	RTK
	AD_E	●	RTKP
☆	CW	●	VTK
●	RD		

Base Microwave Cabinet 46 1/2" H w/Drawers–Extended Opening

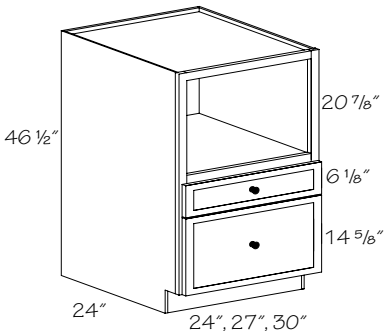

Opening: Width 21"; Height 19"

❍ **BMCDE242446**

Opening: Width 24"; Height 19"

BMCDE272446

Opening: Width 27"; Height 19"

BMCDE302446

❍ Change Width (CW) option ***not*** available

- One 14 5/8" H and one 6 1/8" H full overlay drawer front
- Standard cabinet ceiling construction, finished top required
- Designed for countertop style microwaves
- Use Microwave Kit – Compact (CMCK) to reduce opening height to 13"

●	PE		CH
●	APC		IF
☆	APFC		TWR
●	FPEB	●	WR
❖	MI	●	XS
	DE		GD
	OE	●	RTK
	AD_E	●	RTKP
☆	CW	●	VTK
●	RD		

Base Microwave Drawer

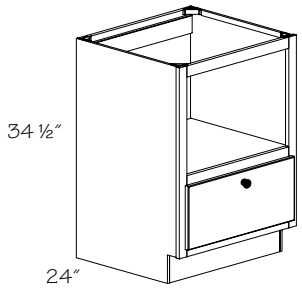

		Cutout
❍	**BMDC242434 •1**	14 13/16" H X 22 1/8" W
	BMDC272434 •1	14 13/16" H X 22 1/8" W
	BMDC302434 •1	14 13/16" H X 28 7/16" W
	BMDC332434 •1	14 13/16" H X 28 7/16" W
❍	**BMDC242434 •2**	15 3/16" H X 22 1/4" W
	BMDC272434 •2	15 3/16" H X 22 1/4" W
	BMDC302434 •2	15 3/16" H X 28 1/2" W
	BMDC332434 •2	15 3/16" H X 28 1/2" W
❍	**BMDC242434 •3**	15 9/16" H X 22 1/8" W
	BMDC272434 •3	15 9/16" H X 22 1/8" W

❍ Change Width (CW) option ***not*** available

- Deep drawer designed for microwave drawer appliances (Check manufacturers specifications for opening requirements)
- 24" and 30" wide cabinets have 1 1/2" frame stiles
- 27" and 33" wide cabinets have 3" frame stiles
- Frame reveals will vary after appliances are installed based on cabinet width

●	PE		CH
●	APC		IF
●	APFC		TWR
●	FPEB	●	WR
❖	MI	●	XS
	DE		GD
	OE	●	RTK
●	AD_E	●	RTKP
☆	CW	●	VTK
●	RD		

Base Built-in Microwave Cabinet

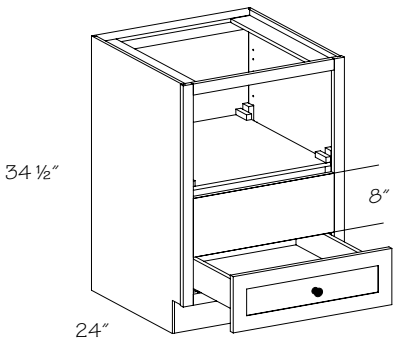

❍ **BBMC242434**
BBMC272434
BBMC302434
BBMC332434

❍ Change Width (CW) option ***not*** available

Cabinet Width	Min. Width	Max. Width	Min. Heigh t	Max. Height
24"	21"	22"	14"	18"
27"	24"	25"	14"	18"
30"	27"	28"	14"	18"
33"	30"	31"	14"	18"

- Adjustable floor
- Plywood floor
- Drawer height is 4"
- Accepts manufacturer's trim kit

●	PE	●	CH
●	APC		IF
●	APFC		TWR
●	FPEB	●	WR
❖	MI	●	XS
	DE		GD
	OE	●	RTK
●	AD_E	●	RTKP
☆	CW	●	VTK
●	RD		

Microwave Kit–Compact

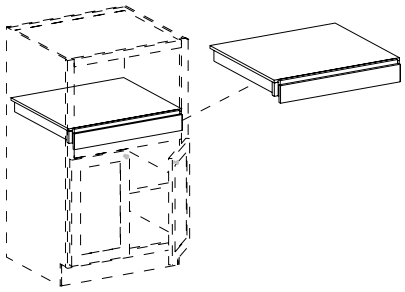

CMCK24
CMCK27

- Kit designed to reduce opening height of Base Microwave Cabinet to 13″
- Slab drawer front in all door styles; DRPD ***not*** available
- Painted hardwood supplied for EverCore™

	PE		CH
●	APC		IF
	APFC		TWR
	FPEB		WR
❖	MI		XS
	DE		GD
	OE		RTK
	AD_E		RTKP
	CW		VTK
●	RD		

Base Dishwasher Cabinet

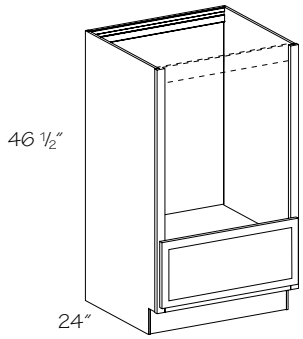

BDW272446

- Allows for 11″ raised installation of standard dishwashers
- False drawer front
- Finished top required
- Plywood floor
- Top rail is removable (used for shipping purposes only)
- ☆ Only available with Recessed Toe Kick Peninsula Back (RTKP); ***cannot*** accommodate Recessed Toe Kick for sides (RTKPB, RTKPL, RTKPR)

●	PE		CH
●	APC		IF
●	APFC		TWR
●	FPEB	●	WR
	MI	●	XS
	DE		GD
	OE		RTK
	AD_E	☆	RTKP
	CW	●	VTK
	RD		

Consider using a three-drawer stack adjacent to this cabinet. The bottom false front will align with the bottom drawer base cabinets.

Consider ordering 46 1/2″ high Base Microwave (BMC) and Dishwasher (BDW) Cabinets with Furniture Plywood Ends (FPEB) to bring the sides flush with the face frame. This will prevent having to notch the countertop of an adjacent cabinet to fit behind the face frame.

Dishwasher Panel

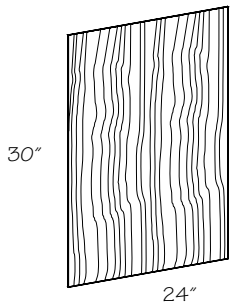

DWP

- 3/16″ thick, plain panel
- Painted hardwood supplied for EverCore™
- Painted or Stained hardwood supplied for Wood-Grain Foil door styles
- Matching wood veneer or laminate
- ***Must*** be trimmed to fit

	PE		CH
	APC		IF
	APFC		TWR
	FPEB		WR
	MI		XS
	DE		GD
	OE		RTK
	AD_E		RTKP
	CW		VTK
	RD		

Dishwasher Raised Panel

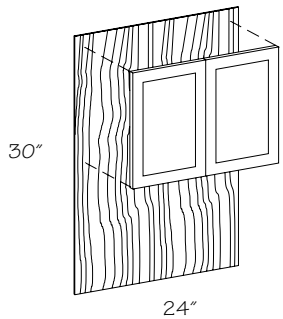

DWP ▪RP

- Full overlay door styles receive one door. All other overlays receive two doors (style and color to match kitchen)
- Mounted to matching 3/16″ wood veneer or laminate panel
- Barnet Crafted door styles are mounted to a plain sawn wood veneer panel
- Quartersawn Oak door styles are mounted to matching 3/16″ quartersawn wood veneer panel
- Universally sized, ***must*** be trimmed to fit

	PE		CH
	APC		IF
	APFC		TWR
	FPEB		WR
	MI		XS
	DE		GD
	OE		RTK
	AD_E		RTKP
	CW		VTK
	RD		

Base Corner Cabinets

PBBC	36
code	width

Material dimensions listed may vary slightly from actual dimensions of the product.

Specifications subject to change without notice.

Construction Options and Modifications

- ❖ Included as standard
- ● Available with an upcharge
- ☆ Available with exceptions
- (Blank) ***Not*** available

PE	Plywood Ends
APC	All Plywood Construction
APFC	All Plywood Furniture Construction
FPEB	Furniture Plywood Ends
MI	Matching Interior
DE	Integrated Decorative End
AD_E	Attached Decorative End
CW	Change Width
RD	Reduced Depth
CH	Change Height
TWR	Top Wide Rail
WR	Wide Bottom Rail
XS	Extended Stile
GD	Glass Doors
RTK	Recessed Toe Kick
RTKP	Recessed Toe Kick Peninsula
VTK	Void Toe Kick

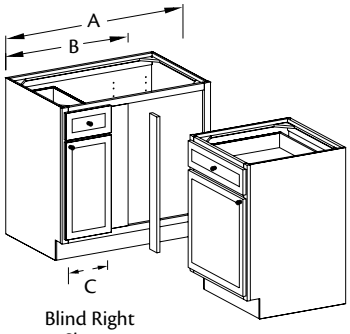

Blind Right Shown

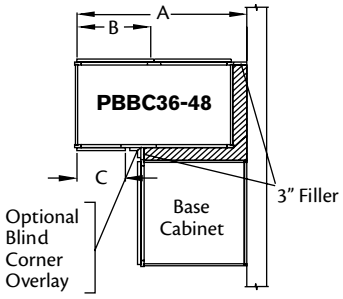

Peninsula Base Blind Corner Cabinet

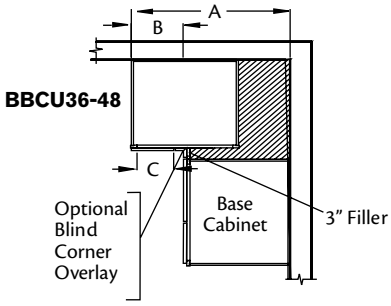

Base Blind Cabinet Universal

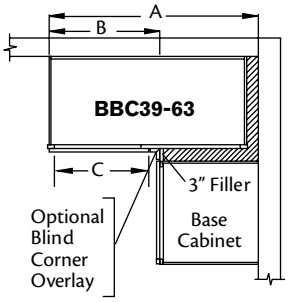

Base Blind Cabinet/ Sink Base Blind Cabinet

Base Blind Corner Cabinet Information

- All Base Blind Corner (BBC) cabinets ***must*** be pulled. Consult chart or pull dimensions and minimum wall space requirements
- R or L indicates blind
- Door hinged on same side as blind on single door cabinets
- A 3" Base Filler (BF) is included with each Base Blind Corner (BBC) cabinet ordered, shipped separately. Base cabinet adjacent to BBC may be ordered with an extended stile in lieu of installing supplied filler
- Base Blind Corner Universal (BBCU) cabinets are shipped blind right standard, and may be reversed in field
- Two 3" Base Fillers (BF) are included with each Peninsula Base Blind Corner (PBBC) ordered except the PBBC 27
- Optional Panel for Base Blind Corner Overlay (OPWBC) is recommended for full overlay door styles; see Base Accessories section of this book
- ***Note:*** For Sink Base Blind Corner (SBBC) cabinet, see Base Cabinets section

	½" Overlay						Full Overlay					
	Wall Space "A"		Exposed Front "B"		Door Open "C"	Cab. Width	Wall Space "A"		Exposed Front "B"		Door Open "C"	Cab. Width
	Min ★	Max.	Min ★	Max			Min ★	Max	Min ★	Max		
BBCU 36	36"	40"	12"	16"	6"	24"	36"	40"	12"	16"	6"	24"
PBBC 36	34 ½"	37 ¾"	10 ½"	13 ¾"	6"	33"	35 ¼"	38 ¾"	11 ¼"	14 ¾"	6"	33"
BBC 39	37 ½"	40 ¾"	13 ½"	16 ¾"	9"	36"	38 ¼"	41 ¾"	14 ¼"	17 ¾"	9"	36"
BBCU 39	37 ½"	40 ⅝"	13 ¾"	16 ⅜"	9"	27"	38 ¼"	39 ⅞"	13"	15 ⅞"	9"	27"
P/BBC 42	40 ½"	43 ¾"	16 ½"	19 ¾"	12"	39"	41 ¼"	44 ¾"	17 ¼"	20 ¾"	12"	39"
BBCU 42	40 ½"	43 ⅝"	16 ¾"	19 ⅜"	12"	33"	41 ¼"	42 ⅞"	16"	18 ⅞"	12"	33"
BBC 45	43 ½"	46 ¾"	19 ½"	22 ¾"	15"	42"	44 ¼"	47 ¾"	20 ¼"	23 ¾"	15"	42"
BBCU 45	43 ½"	46 ⅝"	19 ¾"	22 ⅜"	15"	39"	44 ¼"	45 ⅞"	19"	21 ⅞"	15"	39"
P/BBC 48	46 ½"	49 ¾"	22 ½"	25 ¾"	18"	45"	47 ¼"	50 ¾"	23 ¼"	26 ¾"	18"	45"
BBCU 48	46 ½"	49 ⅝"	22 ¾"	25 ⅜"	18"	45"	47 ¼"	48 ⅞"	22"	24 ⅞"	18"	45"
BBC 51	49 ½"	52 ¾"	25 ½"	28 ¾"	21"	48"	50 ¼"	53 ¾"	26 ¼"	29 ¾"	21"	48"
BBC 54*	52 ½"	55 ¾"	28 ½"	31 ¾"	24"	51"	53 ¼"	56 ¾"	29 ¼"	32 ¾"	24"	51"
BBC 57*	55 ½"	58 ¾"	31 ½"	34 ¾"	27"	54"	56 ¼"	59 ¾"	32 ¼"	35 ¾"	27"	54"
BBC 60*	58 ½"	61 ¾"	34 ½"	37 ¾"	30"	57"	59 ¼"	62 ¾"	35 ¼"	38 ¾"	30"	57"
BBC 63*	61 ½"	64 ¾"	37 ½"	40 ¾"	33"	60"	62 ¼"	65 ¾"	38 ¼"	41 ¾"	33"	60"

★ Dimensions "A" and "B" minimum requirements include optional decorative hardware clearance. You may deduct 1 1/4" if hardware is not used.
✻ Cabinets will have BUTT doors

Base Blind Corner Universal

Right Blind Shown

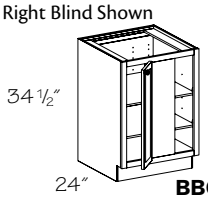

BBCU36

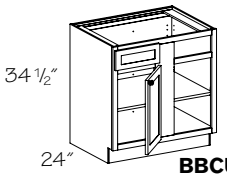

BBCU39-48

BBCU36

Blind panel (stile) is 9" wide

Two adjustable, full-depth shelves

Full-height door

Vanderbilt doors will have a solid, recessed flat panel

BBCU39

BBCU42

BBCU45

BBCU48

One adjustable shelf

Blind panel (stile) is 6" wide

- Base Blind Corner Universal (BBCU) cabinets are shipped blind right standard, and may be reversed in field
- Right blind shown
- False drawer front
- Door is hinged from blind panel
- Filler included
- Overlay Panel for Base Blind Corner (OPWBC) ***must*** be ordered separately
- Factory installed Roll-out Trays (ROT) are ***not*** available

Consider using the Full Height Door (FHK) option on Base Blind Corner Cabinets to increase storage height of the top shelf

● PE
● APC
● APFC
● FPEB
● MI
DE
● AD_E
CW
● RD
● CH
TWR
● WR
● XS
GD
● RTK
● RTKP
● VTK

Base Blind Corner

Right Blind Shown

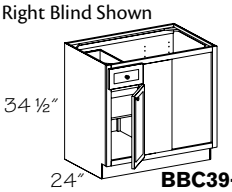

BBC39-51

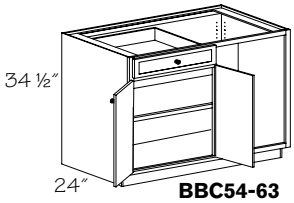

BBC54-63

Specify R or L

BBC39 R or L

BBC42 R or L

BBC45 R or L

BBC48 R or L

BBC51 R or L

BBC54 R or L

BBC57 R or L

BBC60 R or L

BBC63 R or L

- Blind panel (stile) is 8" wide
- Blind opening is covered with an unfinished panel
- R or L indicates blind
- Door is hinged from blind panel
- Filler included
- Overlay Panel for Base Blind Corner (OPWBC) ***must*** be ordered separately
- One adjustable shelf
- Factory installed Roll-out Trays (ROT) are ***not*** available

Consider using the Full Height Door (FHK) option on Base Blind Corner Cabinets to increase storage height of the top shelf

● PE
● APC
● APFC
● FPEB
● MI
● DE
● AD_E
CW
● RD
● CH
TWR
● WR
● XS
● GD
● RTK
● RTKP
● VTK

Base Blind Corner w/Wood Lazy Susan

Right Blind Shown

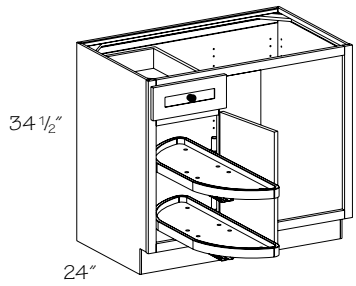

Specify R or L

BBC42 R or L•WLS

BBC45 R or L•WLS

BBC48 R or L•WLS

- Blind panel (stile) is 8" wide
- Blind opening is covered with an unfinished panel
- R or L indicates blind
- Door is hinged from blind panel
- Filler included
- Overlay Panel for Base Blind Corner (OPWBC) ***must*** be ordered separately
- Two half-circle shelves, rotate and slide out individually
- Rotating shelves have plywood floor and solid wood trim
- All Wood Lazy Susan also available as field installed kit; see Base Accessories section of this book

Consider using the Full Height Door (FHK) option on Base Blind Corner Cabinets to increase storage height of the top shelf

● PE
● APC
● APFC
● FPEB
● MI
● DE
● AD_E
CW
RD
CH
TWR
● WR
● XS
● GD
● RTK
● RTKP
● VTK

Base Blind Corner w/Chrome Swing-out

Right Blind Shown

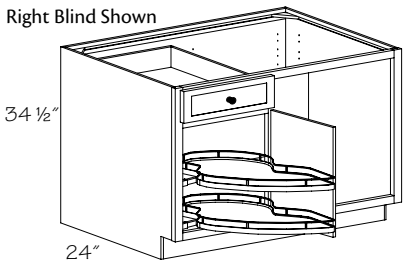

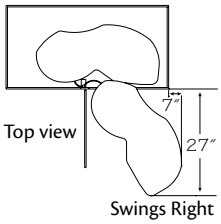

Specify R or L

BBC48 R or L•CSW

- Blind panel (stile) is 8″ wide
- Blind opening is covered with an unfinished panel
- R or L indicates blind
- Door is hinged from blind panel
- Filler included
- Overlay Panel for Base Blind Corner (OPWBC) ***must*** be ordered separately
- One standard drawer
- Two full swing shelves rotate individually
- Shelf height is adjustable
- Shelf is non-stick coated Maple melamine with chrome gallery rails
- ***Note:*** Swing-out will ***not*** fully open if a wall, another cabinet, appliance or any other obstruction deeper than 24″ is next to swing-out side end panel

● PE
● APC
● APFC
● FPEB
● MI
DE
● AD_E
CW
RD
CH
TWR
● WR
● XS
● GD
● RTK
● RTKP
● VTK

Consider using the Full Height Door (FHK) option on Base Blind Corner Cabinets to increase storage height of the top shelf

Base Blind Corner w/Wood Swing-out

Right Blind Shown

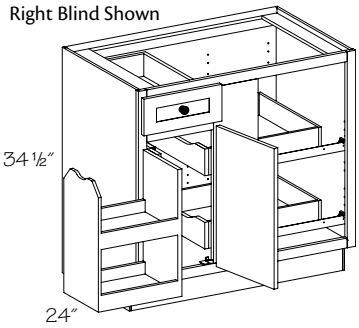

Specify R or L

BBC42 R or L•PSO
BBC45 R or L•PSO
BBC48 R or L•PSO

- Blind panel (stile) is 8″ wide
- Blind opening is covered with an unfinished panel
- R or L indicates blind
- Door is hinged from blind panel
- Filler included
- Overlay Panel for Base Blind Corner (OPWBC) ***must*** be ordered separately
- One standard drawer
- Two Deluxe Roll-out Trays (DXROT)
- Solid wood swing-out caddy
- ***Note:*** Swing-out will ***not*** fully open if a wall, another cabinet, appliance or any other obstruction deeper than 24″ is next to swing-out side end panel

● PE
● APC
● APFC
● FPEB
● MI
DE
● AD_E
CW
RD
CH
TWR
● WR
● XS
● GD
● RTK
● RTKP
● VTK

Consider using the Full Height Door (FHK) option on Base Blind Corner Cabinets to increase storage height of the top shelf

Peninsula Base Blind Corner

Right Blind Shown

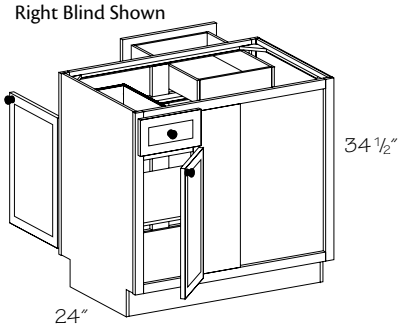

Specify R or L

❇ ☆**PBBC36 R or L**
PBBC39 R or L
PBBC42 R or L
PBBC45 R or L
PBBC48 R or L

❇ Full-height, kitchen side only. Vanderbilt doors will have a solid, recessed flat panel

☆ Glass doors ***not*** available on kitchen side

- Blind panel (stile) is 8″ wide
- Blind opening is covered with an unfinished panel
- R or L indicates blind
- Kitchen door is hinged from blind panel
- Overlay Panel for Base Blind Corner (OPWBC) ***must*** be ordered separately
- Single door and working drawer on kitchen side; double doors and single drawer on peninsula side
- One adjustable shelf
- Factory installed Roll-out Trays (ROT) are ***not*** available
- ***Note:*** Two 3″ base fillers included. Blind Corner Overlay ***must*** be ordered separately; see Base Accessories section of this book

● PE
● APC
● APFC
● FPEB
● MI
DE
● AD_E
CW
● RD
● CH
TWR
● WR
● XS
☆ GD
● RTK
❖ RTKP
● VTK

Consider using the Full Height Door (FHK), Full Height Peninsula (FHP) or Full Height Both (FHB) option on Peninsula Base Blind Corner Cabinets to increase storage height of the top shelf

Peninsula Base Blind Corner–27" Wide

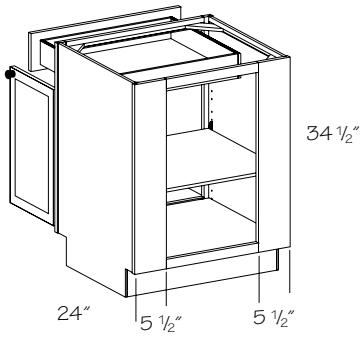

PBBC27

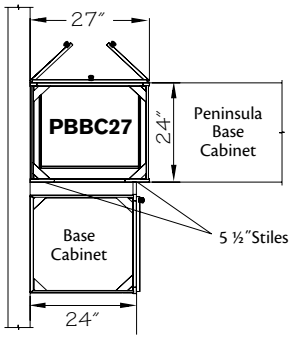

- One adjustable shelf
- Two 5 1/2" stiles on blind side allow cabinet to be used as right or left
- Double doors and single drawer
- Reversible
- For use as a starter cabinet for peninsula
- Designed to fit flush against wall, cabinet may be pulled approximately 2 1/4". Full overlay door styles require a pull of at least 1" from wall to allow decorative hardware clearance
- Filler included
- Overlay Panel for Base Blind Corner (OPWBC) ***must*** be ordered separately
- Working drawer and doors open to same side

● PE
● APC
● APFC
● FPEB
● MI
DE
● AD_E
CW
● RD
● CH
TWR
● WR
● XS
● GD
● RTK
❖ RTKP
● VTK

Remember, when using a 27" wide Peninsula Base Blind Corner cabinet (PBBC27), it is highly recommended to use peninsula cabinets on the adjacent run due to depth continuity. If regular base cabinets are used, the run will ***not*** be flush once the matching panel is applied.

Wood Lazy Susan

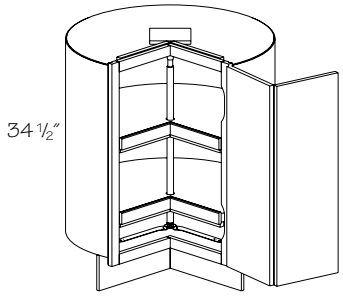

Specify R or L

LS36 R or L▪WLS

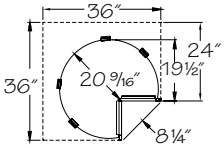

All dimensions are to outside of frame

- Rotating shelves have plywood floor and solid wood trim
- Requires 36" of wall space
- Face frame is scooped for hinge installation on full overlay door styles
- Doors are profiled on one long and two short edges and are connected with hinges
- Contrasting Back Options (CBEB, CPLB, CVGR) ***not*** available
- ☆ Back (barrel) will ***not*** be plywood when APC is chosen

PE
☆ APC
APFC
FPEB
MI
DE
AD_E
CW
RD
CH
TWR
● WR
● XS
● GD
RTK
RTKP
VTK

Lazy Susan End Panel

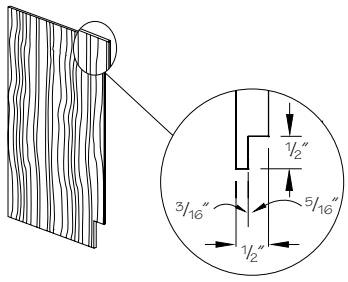

Specify R or L

LSEP ▪R or L

- Notched to fit behind stile of Lazy Susan front frame
- Requires 3/16" of wall space
- Crafted or Quartersawn door styles will be supplied in plain sawn wood
- Painted hardwood supplied for EverCore™
- Exterior finished to match, interior is Natural Birch Viraguard

● PE
● APC
● APFC
● FPEB
MI
DE
AD_E
CW
RD
CH
TWR
WR
XS
GD
RTK
RTKP
VTK

Base Angle

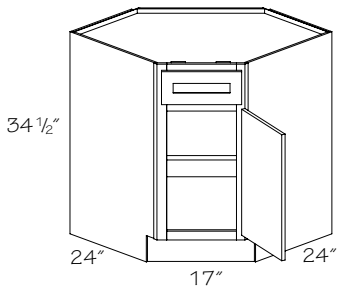

Specify R or L

BA36 R or L

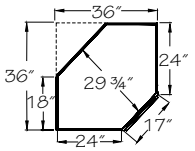

All dimensions are to outside of frame

- One fixed shelf
- False drawer front
- Angled back provides clearance for installation
- 30 1/2″ door clearance recommended for delivery
- Back Options (BEB and VGRB) ***not*** available
- Contrasting Back Options (CBEB, CPLB, CVGR) ***not*** available
- ***Note:*** Full overlay door styles use a 1/2″ overlay hinge

●	PE
●	APC
●	APFC
●	FPEB
●	MI
	DE
●	AD_E
	CW
	RD
●	CH
●	TWR
●	WR
	XS
●	GD
●	RTK
	RTKP
●	VTK

Base Angle Full-Height Door

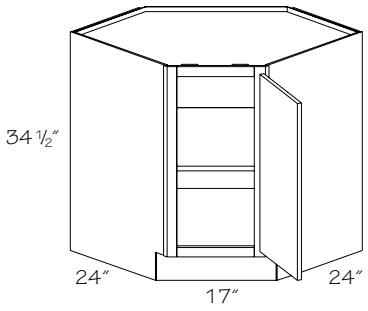

Specify R or L

BA36 R or L•FH

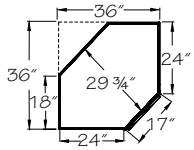

All dimensions are to outside of frame

- One fixed shelf
- Angled back provides clearance for installation
- 30 1/2″ door clearance recommended for delivery
- Back Options (BEB and VGRB) ***not*** available
- Contrasting Back Options (CBEB, CPLB, CVGR) ***not*** available
- ***Note:*** Full overlay door styles use a 1/2″ overlay hinge



Full overlay doors on cabinets with an angled front are intentionally narrower to allow proper clearance of adjacent cabinets.

●	PE
●	APC
●	APFC
●	FPEB
●	MI
	DE
●	AD_E
	CW
	RD
●	CH
●	TWR
●	WR
	XS
●	GD
●	RTK
	RTKP
●	VTK

Wood Lazy Susan Angle

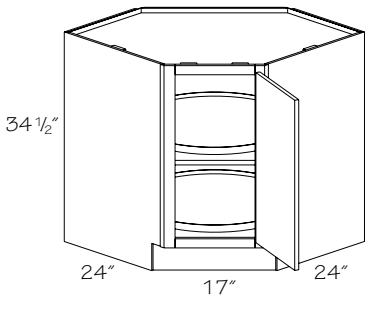

Specify R or L

LSA36 R or L•WLS

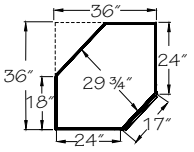

All dimensions are to outside of frame

- Two 28″ diameter rotating shelves
- Rotating shelves have plywood floor and solid wood trim
- Angled back provides clearance for installation
- 30 1/2″ door clearance recommended for delivery
- Back Options (BEB and VGRB) ***not*** available
- Contrasting Back Options (CBEB, CPLB, CVGR) ***not*** available
- ***Note:*** Full overlay door styles use a 1/2″ overlay hinge



Do ***not*** design a corner cabinet adjacent to an object deeper than the end panel. The door of the corner cabinet may ***not*** function properly.

●	PE
●	APC
●	APFC
●	FPEB
●	MI
	DE
●	AD_E
	CW
	RD
●	CH
	TWR
●	WR
	XS
●	GD
●	RTK
	RTKP
●	VTK

Easy Reach

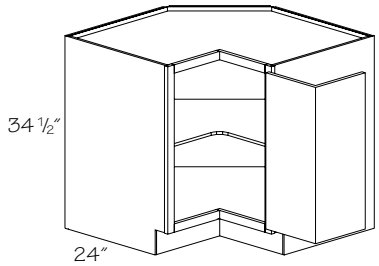

Specify R or L

☆◆■ **EZR33 R or L**

EZR36 R or L

☆ Glass door option ***not*** available

◆ Vanderbilt doors will have a solid, recessed flat panel. Courtney doors will have a veneer, recessed flat panel

■ Wood-Grain Foil door styles will be supplied as vertical grain slabs

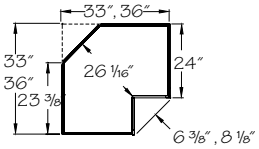

All dimensions are to outside of frame

- One fixed shelf
- Frame opening, from left to right edge is 10 1/2″ for EZR33 and 14 3/4″ for EZR36
- Face frame is scooped for hinge installation on full overlay door styles
- Doors are profiled on one long and two short edges and are connected with hinges
- Angled back provides clearance for installation
- 29″ door clearance recommended for delivery
- Back Options (BEB and VGRB) ***not*** available
- Contrasting Back Options (CBEB, CPLB, CVGR) ***not*** available

☆ ***Not*** available with Aluminum Frame Glass doors

- ***Note:*** Does ***not*** include Soft-Close feature

Do ***not*** put an appliance next to an Easy Reach (EZR) cabinet without providing proper clearance for the door to operate. Also, the cabinet door should be hinged opposite the appliance.

● PE
● APC
● APFC
● FPEB
● MI
DE
● AD_E
CW
RD
● CH
TWR
● WR
● XS
☆ GD
● RTK
RTKP
● VTK

New

Easy Reach w/Chrome Super Susan

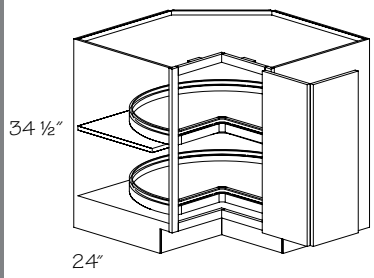

Specify R or L
28″ diameter pie-cut shelves

■ **EZR33 R or L▪CSS**

32″ diameter pie-cut shelves

☆ **EZR36 R or L▪CSS**

■ Glass door option ***not*** available

☆ ***Not*** available with Aluminum Frame Glass doors

Grey color coding indicates new product, size or code.

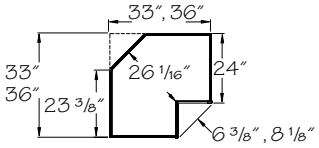

All dimensions are to outside of frame

- Two pie-cut shelves rotate individually
- Rotating shelf has chrome rail
- Frame opening from left to right edge:
  10 1/2″ for EZR33
  14 3/4″ for EZR36
- Face frame is scooped for hinge installation on full overlay door styles
- Doors are profiled on one long and two short edges and are connected with hinges
- Angled back provides clearance for installation
- 29″ door clearance recommended for delivery
- ***Note:*** Does ***not*** include Soft-Close feature

● PE
● APC
● APFC
● FPEB
● MI
DE
● AD_E
CW
RD
● CH
TWR
● WR
● XS
☆ GD
● RTK
RTKP
● VTK

Easy Reach Wood Super Susan

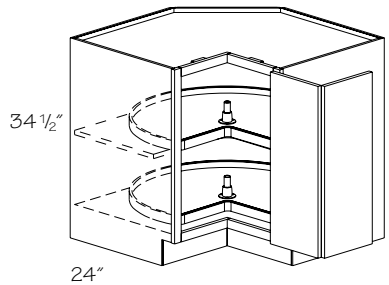

Specify R or L

☆◆■ **EZR33 R or L▪WSS**

EZR36 R or L▪WSS

☆ Glass door option ***not*** available

◆ Vanderbilt doors will have a solid, recessed flat panel. Courtney doors will have a veneer, recessed flat panel

■ Wood-Grain Foil door styles will be supplied as vertical grain slabs

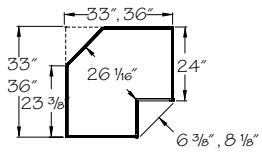

All dimensions are to outside of frame

- Two pie-cut shelves rotate individually
- EZR33 has 28″ diameter shelves; EZR36 has 32″ diameter shelves
- Rotating shelves have plywood floor and solid wood trim
- Frame opening, from left to right edge is 10 1/2″ for EZR33 and 14 3/4″ for EZR36
- Face frame is scooped for hinge installation on full overlay door styles
- Doors are profiled on one long and two short edges and are connected with hinges
- Angled back provides clearance for installation
- 29″ door clearance recommended for delivery
- Back Options (BEB and VGRB) ***not*** available
- Contrasting Back Options (CBEB, CPLB, CVGR) ***not*** available

☆ ***Not*** available with Aluminum Frame Glass doors

- ***Note:*** Does ***not*** include Soft-Close feature

● PE
● APC
● APFC
● FPEB
● MI
DE
● AD_E
CW
RD
● CH
TWR
● WR
● XS
☆ GD
● RTK
RTKP
● VTK

Asymmetrical Easy Reach

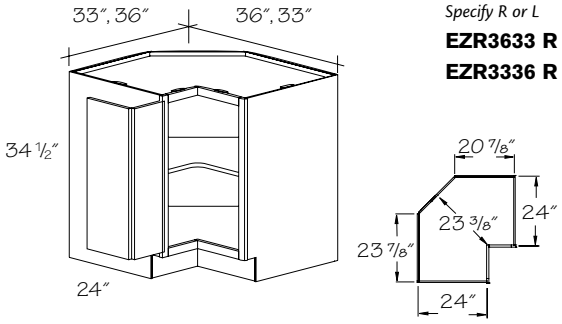

Specify R or L

EZR3633 R or L

EZR3336 R or L

- One fixed shelf
- Frame opening from left to right edge is 12 7/8″
- Face frame is scooped for hinge installation on full overlay door styles
- Doors are profiled on one long and two short edges and are connected with hinges
- Angled back provides clearance for installation
- 29″ door clearance recommended for delivery
- Vanderbilt doors will have a solid, recessed flat panel. Courtney doors will have a veneer, recessed flat panel
- Back Options (BEB and VGRB) ***not*** available
- Contrasting Back Options (CBEB, CPLB, CVGR) ***not*** available
- ***Note:*** Does ***not*** include Soft-Close feature

●	PE
●	APC
●	APFC
●	FPEB
●	MI
	DE
●	AD_E
	CW
	RD
●	CH
	TWR
●	WR
●	XS
	GD
●	RTK
	RTKP
●	VTK

New

Asymmetrical Easy Reach w/Chrome Super Susan

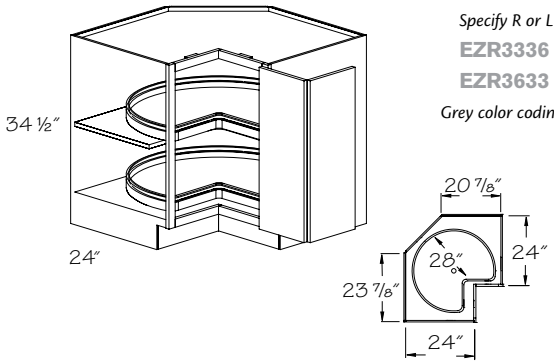

Specify R or L

EZR3336 R or L•CSS

EZR3633 R or L•CSS

Grey color coding indicates new product, size or code.

- Two 28″ diameter pie-cut shelves rotate individually
- Rotating shelf has chrome rail
- Frame opening, from left to right edge is 17 5/8″
- Face frame is scooped for hinge installation on full overlay door styles
- Doors are profiled on one long and two short edges and are connected with hinges
- Angled back provides clearance for installation
- 29″ door clearance recommended for delivery
- ***Note:*** Does ***not*** include Soft-Close feature

●	PE
●	APC
●	APFC
●	FPEB
●	MI
	DE
●	AD_E
	CW
	RD
●	CH
	TWR
●	WR
●	XS
	GD
●	RTK
	RTKP
●	VTK

Asymmetrical Easy Reach Wood Super Susan

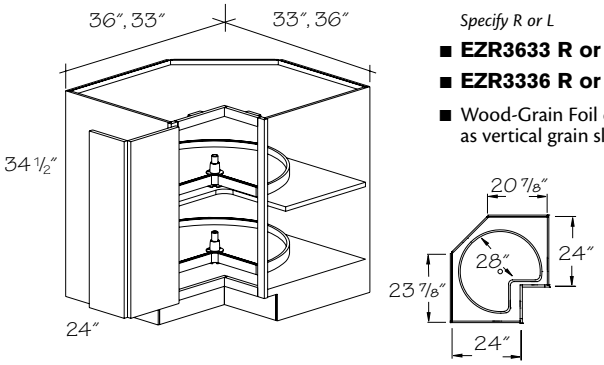

Specify R or L

- **EZR3633 R or L•WSS**
- **EZR3336 R or L•WSS**
- Wood-Grain Foil door styles will be supplied as vertical grain slabs

- Two pie-cut 28″ diameter rotating shelves
- Rotating shelves have plywood floor and solid wood trim
- Frame opening from left to right edge is 12 7/8″
- Face frame is scooped for hinge installation on full overlay door styles
- Doors are profiled on one long and two short edges and are connected with hinges
- Angled back provides clearance for installation
- 29″ door clearance recommended for delivery
- Vanderbilt doors will have a solid, recessed flat panel. Courtney doors will have a veneer, recessed flat panel
- Back Options (BEB and VGRB) ***not*** available
- Contrasting Back Options (CBEB, CPLB, CVGR) ***not*** available
- Order Example as shown: EZR3633 L•WLS
- ***Note:*** Does ***not*** include Soft-Close feature

●	PE
●	APC
●	APFC
●	FPEB
●	MI
	DE
●	AD_E
	CW
	RD
●	CH
	TWR
●	WR
●	XS
	GD
●	RTK
	RTKP
●	VTK

Base Corner Drawer Cabinet and Base Corner Smart Space Companion View

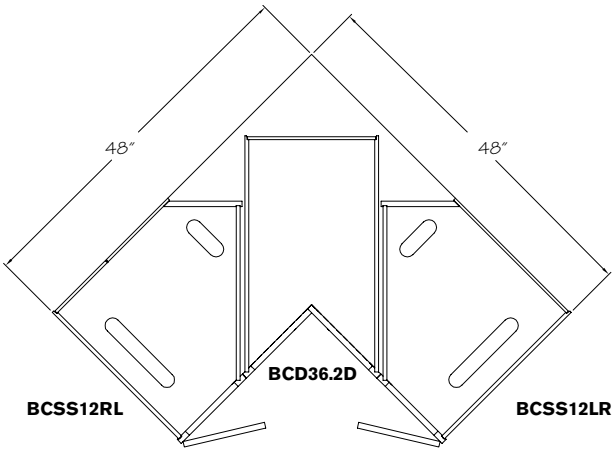

Base Corner Smart Space (BCSS) cabinets can also be used as an alternate corner solution when used with a Base Filler 3x3 (BF3X3) in place of a Base Corner Drawer (BCD) cabinet

Base Corner Drawer Cabinet

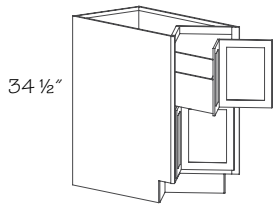

BCD2D

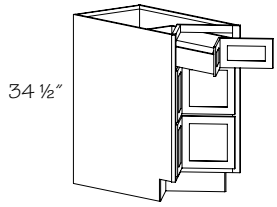

BCD3D

Two Drawer

BCD36 ▪2D

Three Drawer

BCD36 ▪3D

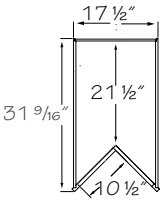

- 90 degree frame
- Drawer is the same as a B12
- ***Not*** available with any drawer box accessories
- Requires 36″ of wall space

Be sure to use a filler next to the Base Corner Drawer Cabinet (BCD) if an adjacent unit is deeper than 24″. The filler width must equal the distance a unit will extend beyond the Base Corner Drawer Cabinet (BCD) to ensure proper drawer clearance. For example: The Base Corner Drawer Cabinet (BCD) will require a 2″ filler if a 26″ deep range is placed next to it.

●	PE
●	APC
	APFC
	FPEB
	MI
	DE
	AD_E
	CW
	RD
	CH
	TWR
●	WR
●	XS
	GD
	RTK
	RTKP
●	VTK

Base Corner Smart Space Cabinet

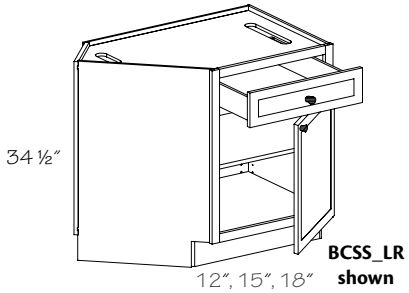

BCSS_LR shown

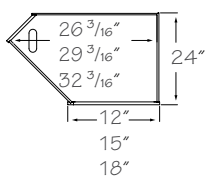

Specify RR or RL Right

❍ **BCSS12 RR or RL**

❍ **BCSS15 RR or RL**

❍ **BCSS18 RR or RL**

Specify LR or LL Left

❒ **BCSS12 LR or LL**

❒ **BCSS15 LR or LL**

❒ **BCSS18 LR or LL**

❍ Extended Stile (XS) available on the left side only

❒ Extended Stile (XS) available on the right side only

- Roll-out Trays (ROT) are ***not*** available
- Right cabinets: Place on the left side of a Base Corner Drawer cabinet (See Base Corner Drawer Cabinet and Base Corner Smart Space Companion View)
- Left cabinets: Place on the right side of a Base Corner Drawer cabinet (See Base Corner Drawer Cabinet and Base Corner Smart Space Companion View)

☆ Furniture Ends will be supplied on the non-angled end panels only

●	PE
●	APC
☆	APFC
☆	FPEB
●	MI
●	DE
●	AD_E
	CW
	RD
	CH
●	TWR
●	WR
☆	XS
●	GD
●	RTK
	RTKP
●	VTK

135° Base Inside Angle Corner Cabinet

BIAC21

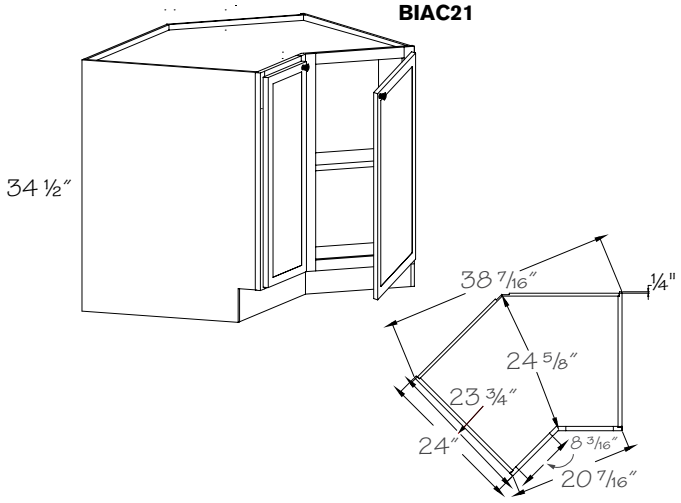

- Backs of cabinets are slightly recessed to allow for wall imperfections, shimming is required
- One adjustable shelf

●	PE
●	APC
●	APFC
●	FPEB
●	MI
	DE
	AD_E
	CW
	RD
●	CH
	TWR
●	WR
●	XS
	GD
●	RTK
	RTKP
●	VTK

135° Base Outside Angle Corner Cabinet

BOAC6

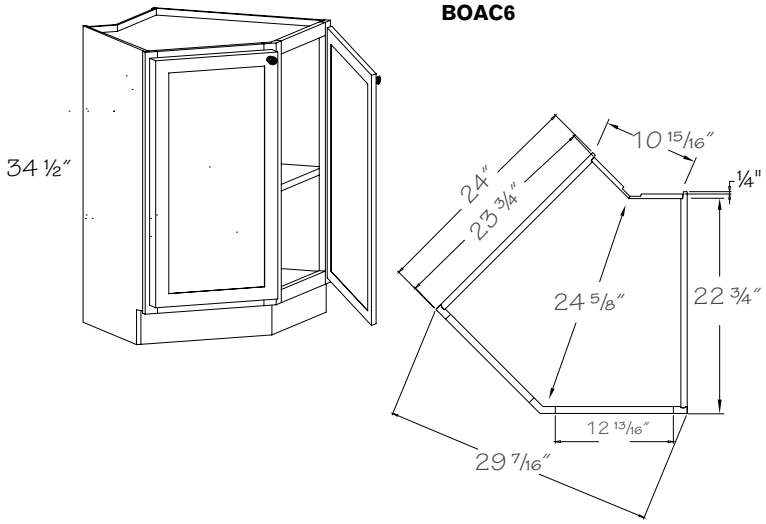

- Backs of cabinets are slightly recessed to allow for wall imperfections, shimming is required
- One adjustable shelf

●	PE
●	APC
●	APFC
●	FPEB
●	MI
	DE
	AD_E
	CW
	RD
●	CH
	TWR
●	WR
●	XS
●	GD
●	RTK
	RTKP
●	VTK

Peninsula Base Corner Cabinets

PEZR	36	R	L
code	width	kitchen side hinging	rear frame position

Material dimensions listed may vary slightly from actual dimensions of the product.

Specifications subject to change without notice.

Construction Options and Modifications

❖ Included as standard
● Available with an upcharge
☆ Available with exceptions
(Blank) ***Not*** available

PE	Plywood Ends
APC	All Plywood Construction
APFC	All Plywood Furniture Construction
FPEB	Furniture Plywood Ends
MI	Matching Interior
AD_E	Attached Decorative End
CW	Change Width
RD	Reduced Depth
CH	Change Height
IF	Inverted Frame
TWR	Top Wide Rail
WR	Wide Bottom Rail
XS	Extended Stile
GD	Glass Doors
RTK	Recessed Toe Kick
RTKP	Recessed Toe Kick Peninsula
VTK	Void Toe Kick

Peninsula Easy Reach

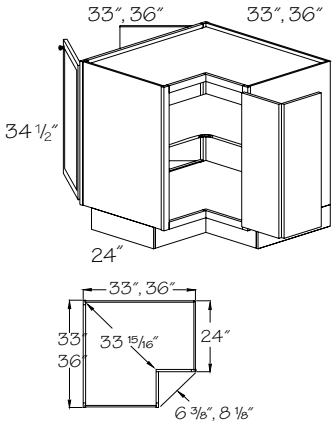

All dimensions are to outside of frame

Specify R or L Rear Frame Position

☆◆■ **PEZR33 RR or L**
☆◆■ **PEZR33 LR or L**
❊ **PEZR36 RR or L**
❊ **PEZR36 LR or L**

☆ Glass doors ***not*** available on kitchen side
◆ Vanderbilt doors will have a solid, recessed flat panel on kitchen side. Courtney doors will have a veneer, recessed flat panel on kitchen side
■ Wood-Grain Foil door styles will be supplied as vertical grain slabs
❊ ***Not*** available with Aluminum Frame glass doors on kitchen side

- One fixed shelf
- Frame opening, from left to right edge is 10 1/2″ for EZR33 and 14 3/4″ for EZR36
- Doors are profiled on one long and two short edges and are connected with hinges
- The first R or L designates kitchen side door hinging
- The second R or L designates rear (peninsula) frame position
- Butt doors on peninsula side
- Toe kick is detachable
- 31″ door clearance recommended for delivery
- ***Note:*** Kitchen side does ***not*** include Soft-Close feature. Peninsula side doors feature Soft-Close hinge

●	PE
●	APC
●	APFC
●	FPEB
●	MI
●	AD_E
	CW
	RD
●	CH
	IF
	TWR
	WR
●	XS
☆	GD
	RTK
	RTKP
	VTK

Peninsula Easy Reach Wood Super Susan

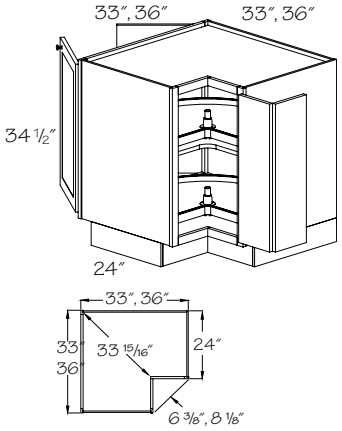

All dimensions are to outside of frame

Specify R or L Rear Frame Position

☆◆■ **PEZR33 RR or L•WSS**
☆◆■ **PEZR33 LR or L•WSS**
❊ **PEZR36 RR or L•WSS**
❊ **PEZR36 LR or L•WSS**

☆ Glass doors ***not*** available on kitchen side
◆ Vanderbilt doors will have a solid, recessed flat panel on kitchen side. Courtney doors will have a veneer, recessed flat panel on kitchen side
■ Wood-Grain Foil door styles will be supplied as vertical grain slabs
❊ ***Not*** available with Aluminum Frame glass doors on kitchen side

- Two pie-cut shelves rotate individually
- EZR33 has 28″ diameter shelves; EZR36 has 32″ diameter shelves
- Rotating shelves are attached to cabinet floor and fixed shelf
- Lazy Susan ***cannot*** be turned from peninsula side with kitchen side doors in closed position
- Frame opening, from left to right edge is 10 1/2″ for EZR33 and 14 3/4″ for EZR36
- Doors are profiled on one long and two short edges and are connected with hinges
- The first R or L designates kitchen side door hinging
- The second R or L designates rear (peninsula) frame position
- Butt doors on peninsula side
- 31″ door clearance recommended for delivery
- Toe kick is detachable
- ***Note:*** Kitchen side does ***not*** include Soft-Close feature. Peninsula side doors feature Soft-Close hinge

●	PE
●	APC
●	APFC
●	FPEB
●	MI
●	AD_E
	CW
	RD
●	CH
	IF
	TWR
	WR
●	XS
☆	GD
	RTK
❖	RTKP
	VTK

Peninsula Base Angle Cabinet

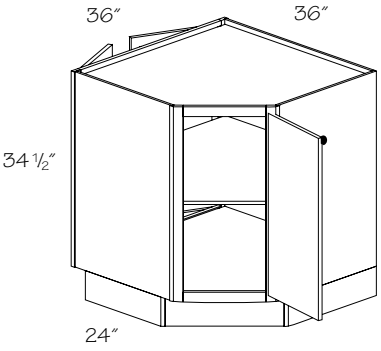

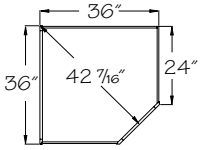

Specify R or L Rear Frame Position

PBA36 RR or L

PBA36 LR or L

- One fixed shelf
- Full-height doors
- Toe kick is detachable
- The first R or L designates kitchen side door hinging
- The second R or L designates rear (peninsula) frame position
- 31″ door clearance recommended for delivery
- ***Note:*** Full overlay door styles: Kitchen side (front) doors use a 1/2" overlay hinge. Peninsula side (back) doors use a full overlay hinge

●	PE
●	APC
●	APFC
●	FPEB
●	MI
●	AD_E
	CW
	RD
●	CH
	IF
	TWR
	WR
	XS
●	GD
	RTK
❖	RTKP
	VTK

Base End Run Cabinets

SBEOS	12	24
code	width	depth

Material dimensions listed may vary slightly from actual dimensions of the product.

Specifications subject to change without notice.

Construction Options and Modifications

❖ Included as standard
● Available with an upcharge
☆ Available with exceptions
(Blank) ***Not*** available

PE	Plywood Ends
APC	All Plywood Construction
APFC	All Plywood Furniture Construction
FPEB	Furniture Plywood Ends
MI	Matching Interior
DE	Integrated Decorative End
AD_E	Attached Decorative End
CW	Change Width
RD	Reduced Depth
CH	Change Height
WR	Wide Bottom Rail
GD	Glass Doors
RTK	Recessed Toe Kick
RTKP	Recessed Toe Kick Peninsula
VTK	Void Toe Kick

Base Corner Angle

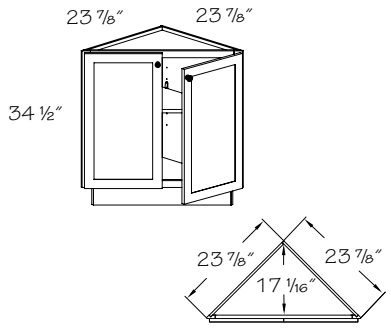

BCA24 BUTT

- One adjustable shelf
- Can be installed on either right or left end
- Contrasting Back Options (CBEB, CPLB, CVGR) ***not*** available

●	PE
●	APC
	APFC
	FPEB
●	MI
	DE
	AD_E
	CW
	RD
●	CH
	WR
●	GD
	RTK
	RTKP
●	VTK

Base End Corner

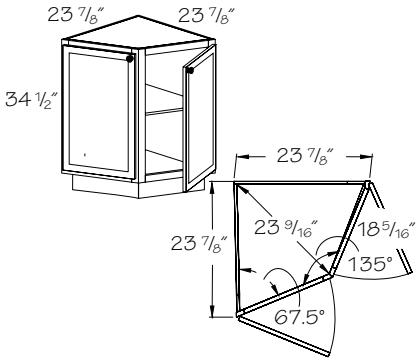

BEC24

- One adjustable shelf
- Can be installed on either right or left end
- Contrasting Back Options (CBEB, CPLB, CVGR) ***not*** available

●	PE
●	APC
	APFC
	FPEB
●	MI
	DE
	AD_E
	CW
	RD
●	CH
	WR
●	GD
	RTK
	RTKP
●	VTK

Base End Angle

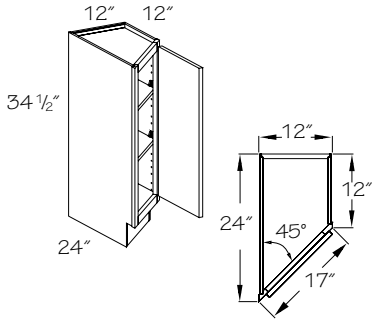

Specify R or L

BEA12 R or L

- Right shown
- Two adjustable shelves
- Full-height door
- One optional tray divider available in center location only
- ☆ Recessed Toe Kick (RTK) available hinge side only
- ☆ Minimum Reduced Depth (RD) is 18″
- ☆ Wide Rail Plain only (WR)
- ☆ Integrated Decorative End (DE) available on 12″ deep side only
- ***Note:*** Full overlay door styles use a 1/2″ overlay hinge

●	PE
●	APC
●	APFC
●	FPEB
●	MI
☆	DE
●	AD_E
	CW
☆	RD
●	CH
☆	WR
●	GD
☆	RTK
	RTKP
●	VTK

Base Message Center

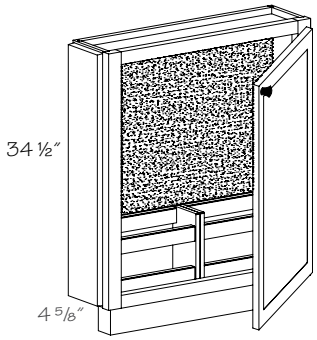

Specify R or L

MCB24 R or L

- For use at the end of a cabinet run
- Includes cork board and two magazine racks
- Filler Overlay (FO) supplied, ships separately, field install

	PE
	APC
❖	APFC
	FPEB
	MI
	DE
	AD_E
	CW
	RD
	CH
●	WR
●	GD
❖	RTK
	RTKP
●	VTK

Solid Wood Base End Open Shelf 24" Deep

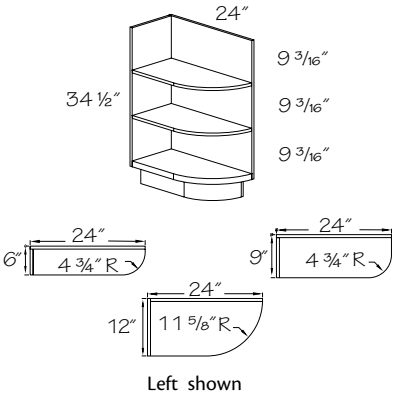

Left shown

Specify R or L

SBEOS624 R or L
SBEOS924 R or L
SBEOS1224 R or L

- Three fixed shelves
- 1 3/16″ thick bottom shelf
- Solid wood construction on shelves only
- 5/8″ wood veneer on sides and back
- Back Options (BEB and VGRB) ***not*** available
- Contrasting Back Options (CBEB, CPLB, CVGR) ***not*** available
- Painted hardwood supplied for EverCore™ and Thermofoil
- Plain sawn material supplied for Barnet Crafted door styles
- For Curved Moldings, see Molding section in Decorative Enhancements
- ***Not*** available in High-Gloss Foil or Wood-Grain Foil door styles
- ***Not*** available in Morristown; Melrose and Putnam Oak supplied quartersawn
- ☆ Shelves remain solid when APC option is chosen; sides and back will be 11/16″ matching wood veneer plywood
- ☆ Reduced Depth (RD) available in 3" increments to a minimum of 12"
- Order Example: SBEOS 1224R-RD reduce depth to 18″

	PE
☆	APC
	APFC
	FPEB
❖	MI
	DE
	AD_E
	CW
☆	RD
	CH
	WR
	GD
	RTK
	RTKP
●	VTK

Solid Wood Peninsula Base End Open Shelf 12" Deep

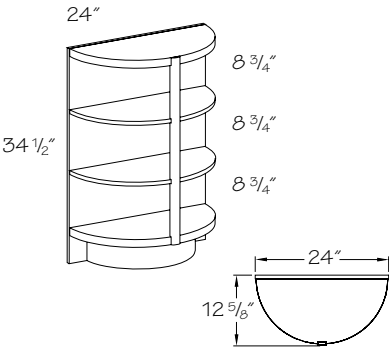

SPBEOS1224

- 11 5/8" radius
- 5/8″ wood veneer on back panel
- 1 3/16″ thick top and bottom shelves; for Curved Moldings see Molding section of this book
- Three fixed shelves
- Solid wood construction on shelves only
- Back may be notched in field for continuous toe kick applications
- Contrasting Back Options (CBEB, CPLB, CVGR) ***not*** available
- Painted hardwood supplied for EverCore™ and Thermofoil
- Plain sawn material supplied for Barnet Crafted door styles
- ***Not*** available in High-Gloss Foil or Wood-Grain Foil door styles
- ***Not*** available in Morristown; Melrose and Putnam Oak supplied quartersawn
- ☆ Shelves remain solid when APC option is chosen; back will be 11/16″ matching wood veneer plywood

	PE
☆	APC
	APFC
	FPEB
❖	MI
	DE
	AD_E
	CW
	RD
	CH
	WR
	GD
	RTK
	RTKP
●	VTK

Base Island

IECDO	38	14	• CLS
code	width	depth	leg style

Material dimensions listed may vary slightly from actual dimensions of the product.

Specifications subject to change without notice.

Construction Options and Modifications

❖ Included as standard
● Available with an upcharge
☆ Available with exceptions
(Blank) ***Not*** available

PE	Plywood Ends
APC	All Plywood Construction
APFC	All Plywood Furniture Construction
MI	Matching Interior
DE	Integrated Decorative End
CW	Change Width
CH	Change Height
IF	Inverted Frame
TWR	Top Wide Rail
GD	Glass Doors
RTK	Recessed Toe Kick
VTK	Void Toe Kick

Island End Cap with Doors

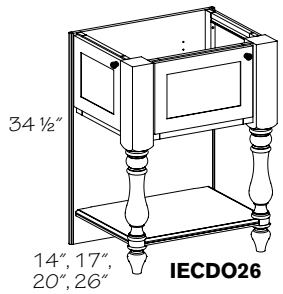

IECDO26

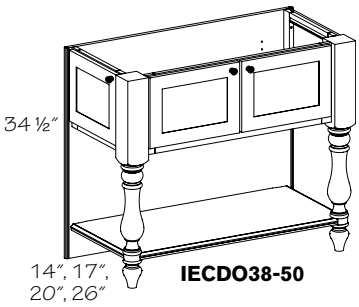

IECDO38-50

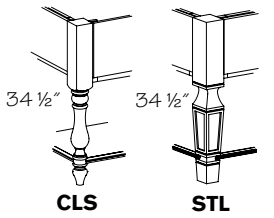

CLS **STL**

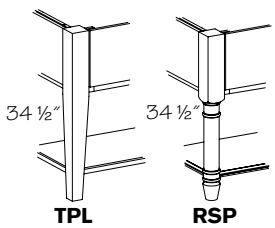

TPL **RSP**

Specify R or L
Classic Leg

IECDO2614 R or L•CLS
IECDO3814 •CLS
IECDO4114 •CLS
IECDO4414 •CLS
IECDO5014 •CLS
IECDO2617 R or L•CLS
IECDO3817 •CLS
IECDO4117 •CLS
IECDO4417 •CLS
IECDO5017 •CLS
IECDO2620 R or L•CLS
IECDO3820 •CLS
IECDO4120 •CLS
IECDO4420 •CLS
IECDO5020 •CLS
IECDO2626 R or L•CLS
IECDO3826 •CLS
IECDO4126 •CLS
IECDO4426 •CLS
IECDO5026 •CLS

Roman Spindle

IECDO2614 R or L•RSP
IECDO3814 •RSP
IECDO4114 •RSP
IECDO4414 •RSP
IECDO5014 •RSP
IECDO2617 R or L•RSP
IECDO3817 •RSP
IECDO4117 •RSP
IECDO4417 •RSP
IECDO5017 •RSP
IECDO2620 R or L•RSP
IECDO3820 •RSP
IECDO4120 •RSP
IECDO4420 •RSP
IECDO5020 •RSP
IECDO2626 R or L•RSP
IECDO3826 •RSP
IECDO4126 •RSP
IECDO4426 •RSP
IECDO5026 •RSP

Specify R or L
Sterling Leg

IECDO2614 R or L•STL
IECDO3814 •STL
IECDO4114 •STL
IECDO4414 •STL
IECDO5014 •STL
IECDO2617 R or L•STL
IECDO3817 •STL
IECDO4117 •STL
IECDO4417 •STL
IECDO5017 •STL
IECDO2620 R or L•STL
IECDO3820 •STL
IECDO4120 •STL
IECDO4420 •STL
IECDO5020 •STL
IECDO2626 R or L•STL
IECDO3826 •STL
IECDO4126 •STL
IECDO4426 •STL
IECDO5026 •STL

Tapered Leg

IECDO2614 R or L•TPL
IECDO3814 •TPL
IECDO4114 •TPL
IECDO4414 •TPL
IECDO5014 •TPL
IECDO2617 R or L•TPL
IECDO3817 •TPL
IECDO4117 •TPL
IECDO4417 •TPL
IECDO5017 •TPL
IECDO2620 R or L•TPL
IECDO3820 •TPL
IECDO4120 •TPL
IECDO4420 •TPL
IECDO5020 •TPL
IECDO2626 R or L•TPL
IECDO3826 •TPL
IECDO4126 •TPL
IECDO4426 •TPL
IECDO5026 •TPL

- Available in Rustic Alder, Cherry, EverCore™, Thermofoil, Maple, Wood-Grain Foil and full overlay door styles only
- Thermofoils are painted hardwood
- Painted hardwood supplied for Wood-Grain Foil door styles; only available in white
- Side doors are fully operational
- Backs of Island End Caps are finished both sides
- Contrasting Back Options (CBEB, CPLB, CVGR) ***not*** available
- Open area height from top of bottom shelf to cabinet frame is 16"
- ***Note:*** Cabinet back panel designed to sit 3/4" proud of doors or drawer fronts

PE
APC
❖ APFC
❖ MI
DE
CW
CH
IF
TWR
GD
RTK
VTK

Island End Cap with Drawers

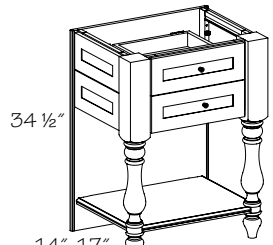

IECDW26-44

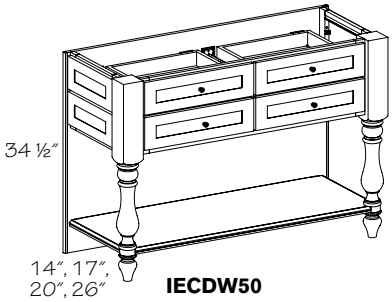

IECDW50

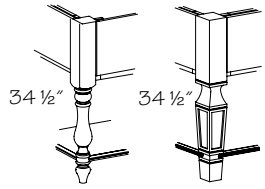

CLS **STL**

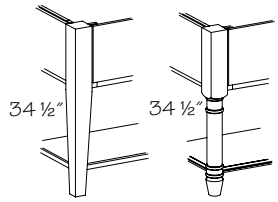

TPL **RSP**

Classic Leg	*Sterling Leg*
IECDW2614 ▪CLS	**IECDW2614 ▪STL**
IECDW3814 ▪CLS	**IECDW3814 ▪STL**
IECDW4114 ▪CLS	**IECDW4114 ▪STL**
IECDW4414 ▪CLS	**IECDW4414 ▪STL**
IECDW5014 ▪CLS	**IECDW5014 ▪STL**
IECDW2617 ▪CLS	**IECDW2617 ▪STL**
IECDW3817 ▪CLS	**IECDW3817 ▪STL**
IECDW4117 ▪CLS	**IECDW4117 ▪STL**
IECDW4417 ▪CLS	**IECDW4417 ▪STL**
IECDW5017 ▪CLS	**IECDW5017 ▪STL**
IECDW2620 ▪CLS	**IECDW2620 ▪STL**
IECDW3820 ▪CLS	**IECDW3820 ▪STL**
IECDW4120 ▪CLS	**IECDW4120 ▪STL**
IECDW4420 ▪CLS	**IECDW4420 ▪STL**
IECDW5020 ▪CLS	**IECDW5020 ▪STL**
IECDW2626 ▪CLS	**IECDW2626 ▪STL**
IECDW3826 ▪CLS	**IECDW3826 ▪STL**
IECDW4126 ▪CLS	**IECDW4126 ▪STL**
IECDW4426 ▪CLS	**IECDW4426 ▪STL**
IECDW5026 ▪CLS	**IECDW5026 ▪STL**
Roman Spindle	*Tapered Leg*
IECDW2614 ▪RSP	**IECDW2614 ▪TPL**
IECDW3814 ▪RSP	**IECDW3814 ▪TPL**
IECDW4114 ▪RSP	**IECDW4114 ▪TPL**
IECDW4414 ▪RSP	**IECDW4414 ▪TPL**
IECDW5014 ▪RSP	**IECDW5014 ▪TPL**
IECDW2617 ▪RSP	**IECDW2617 ▪TPL**
IECDW3817 ▪RSP	**IECDW3817 ▪TPL**
IECDW4117 ▪RSP	**IECDW4117 ▪TPL**
IECDW4417 ▪RSP	**IECDW4417 ▪TPL**
IECDW5017 ▪RSP	**IECDW5017 ▪TPL**
IECDW2620 ▪RSP	**IECDW2620 ▪TPL**
IECDW3820 ▪RSP	**IECDW3820 ▪TPL**
IECDW4120 ▪RSP	**IECDW4120 ▪TPL**
IECDW4420 ▪RSP	**IECDW4420 ▪TPL**
IECDW5020 ▪RSP	**IECDW5020 ▪TPL**
IECDW2626 ▪RSP	**IECDW2626 ▪TPL**
IECDW3826 ▪RSP	**IECDW3826 ▪TPL**
IECDW4126 ▪RSP	**IECDW4126 ▪TPL**
IECDW4426 ▪RSP	**IECDW4426 ▪TPL**
IECDW5026 ▪RSP	**IECDW5026 ▪TPL**

- Available in Rustic Alder Cherry, EverCore™, Thermofoil, Maple and Wood-Grain Foil door styles only
- Thermofoils are painted hardwood
- Painted hardwood supplied for Wood-Grain Foil door styles; only available in white
- Contrasting Back Options (CBEB, CPLB, CVGR) ***not*** available
- Backs of Island End Caps are finished both sides
- Open area height from top of bottom shelf to cabinet frame is 16″
- ***Note:*** Cabinet back panel designed to sit 3/4″ proud of doors or drawer fronts

PE
APC
❖ **APFC**
❖ **MI**
DE
CW
CH
IF
TWR
GD
RTK
VTK

Island End Cap Open with False Doors

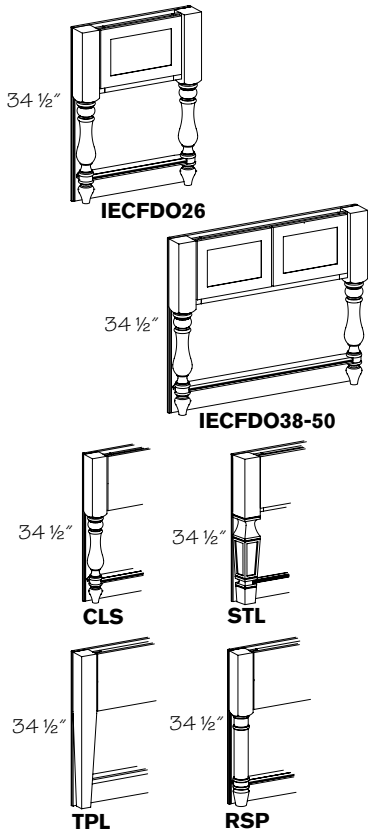

Classic Leg

IECFDO2604 ▪CLS
IECFDO3804 ▪CLS
IECFDO4104 ▪CLS
IECFDO4404 ▪CLS
IECFDO5004 ▪CLS

Roman Spindle Post

IECFDO2604 ▪RSP
IECFDO3804 ▪RSP
IECFDO4104 ▪RSP
IECFDO4404 ▪RSP
IECFDO5004 ▪RSP

Sterling Leg

IECFDO2604 ▪STL
IECFDO3804 ▪STL
IECFDO4104 ▪STL
IECFDO4404 ▪STL
IECFDO5004 ▪STL

Tapered Leg

IECFDO2604 ▪TPL
IECFDO3804 ▪TPL
IECFDO4104 ▪TPL
IECFDO4404 ▪TPL
IECFDO5004 ▪TPL

- Available in Rustic Alder Cherry, EverCore™, Thermofoil, Maple and Wood-Grain Foil door styles only
- Thermofoils are painted hardwood
- Painted hardwood supplied for Wood-Grain Foil door styles; only available in white
- Backs of Island End Caps are finished both sides
- Contrasting Back Options (CBEB, CPLB, CVGR) ***not*** available
- Open area height from top of bottom shelf to cabinet frame is 16"
- ***Note:*** Cabinet back panel designed to sit 3/4" proud of legs

PE
APC
❖ APFC
❖ MI
DE
CW
CH
IF
TWR
GD
RTK
VTK

New

Island End - Bookcase

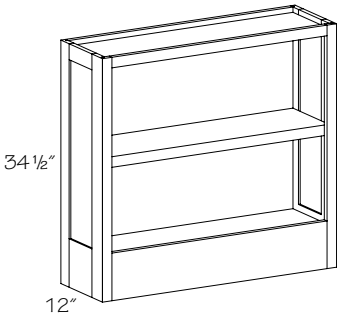

IEB261234
IEB381234
IEB501234

Grey color coding indicates new product, size or code.

- Available in full overlay door styles and the following 1/2" overlay door styles:
  Fox Chase, Grandview, Lyndale and Marquette. All other 1/2" overlay door styles are ***not*** available
- End Panel will match selected door style on the order
- ***Not*** available in Thermofoil door styles
- ***Not*** available in Wood-Grain Foil door styles
- ***Not*** available in slab door styles
- Painted hardwood supplied for EverCore™
- ***Not*** available in Kendrick door styles
- Single fixed shelf

PE
❖ APC
APFC
❖ MI
DE
CW
CH
IF
TWR
GD
RTK
VTK

New

Island End - Gateway

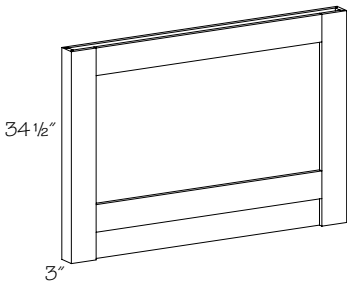

IEG260334
IEG380334
IEG500334

Grey color coding indicates new product, size or code.

- Thermofoils are painted hardwood
- Painted or Stained hardwood supplied for Wood-Grain Foil door styles

	PE
❖	APC
	APFC
	MI
	DE
	CW
	CH
	IF
	TWR
	GD
	RTK
	VTK

New

Island End - Tapered leg

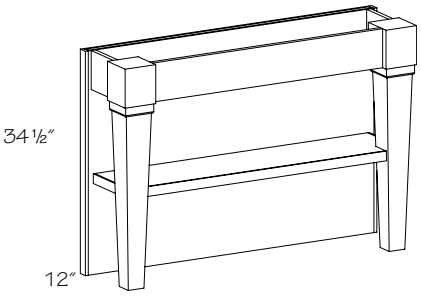

IETL261234
IETL381234
IETL501234

Grey color coding indicates new product, size or code.

- Thermofoils are painted hardwood
- Painted or Stained hardwood supplied for Wood-Grain Foil door styles
- Single fixed shelf

	PE
❖	APC
	APFC
❖	MI
	DE
	CW
	CH
	IF
	TWR
	GD
	RTK
	VTK

New

Island End - Transitional

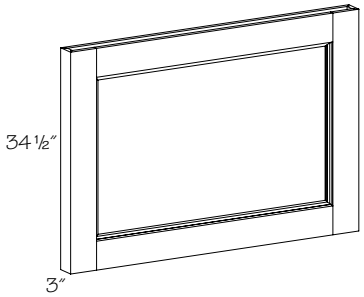

IET260334
IET380334
IET500334

Grey color coding indicates new product, size or code.

- Thermofoils are painted hardwood
- Painted or Stained hardwood supplied for Wood-Grain Foil door styles

	PE
❖	APC
	APFC
	MI
	DE
	CW
	CH
	IF
	TWR
	GD
	RTK
	VTK

Base Specialty Cabinets

BTP	9
code	width

Material dimensions listed may vary slightly from actual dimensions of the product.

Specifications subject to change without notice.

Construction Options and Modifications

❖ Included as standard
● Available with an upcharge
☆ Available with exceptions
(Blank) ***Not*** available

PE	Plywood Ends
APC	All Plywood Construction
APFC	All Plywood Furniture Construction
FPEB	Furniture Plywood Ends
MI	Matching Interior
DE	Integrated Decorative End
AD_E	Attached Decorative End
CW	Change Width
RD	Reduced Depth
CH	Change Height
IF	Inverted Frame
TWR	Top Wide Rail
WR	Wide Bottom Rail
XS	Extended Stile
GD	Glass Doors
RTK	Recessed Toe Kick
RTKP	Recessed Toe Kick Peninsula
VTK	Void Toe Kick
TKD	Toe Kick Drawer

Base Wine Rack

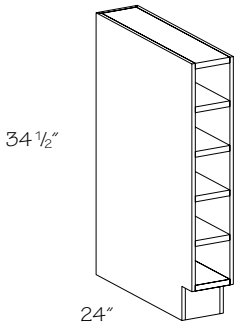

BWR6

	PE		IF
	APC		TWR
	APFC		WR
	FPEB		XS
❖	MI		GD
	DE		RTK
	AD_E	☆	RTKP
	CW	●	VTK
☆	RD		TKD
	CH		

- Wood veneer construction with 1/2" end panels; not available in plywood
- Four fixed shelves
- Bottle stop pin placed at 12" (removable)
- Contrasting Back Options (CBEB, CPLB, CVGR) ***not*** available
- Crafted or Quartersawn door styles will be supplied in plain sawn wood
- Painted hardwood supplied for EverCore™
- Vinyl edge banding applied to edges of cabinet
- Recommended installation is between two cabinets

☆ Minimum Reduced Depth (RD) is 12" for Thermofoil door styles; 6" for wood door styles

☆ Only available with Recessed Toe Kick Peninsula Back (RTKP); ***cannot*** accommodate Recessed Toe Kick for sides (RTKPB, RTKPL, RTKPR)

- ***Note:*** This cabinet features "frameless" type construction

New

Base - Offset Diagonal Wine Storage Cabinet

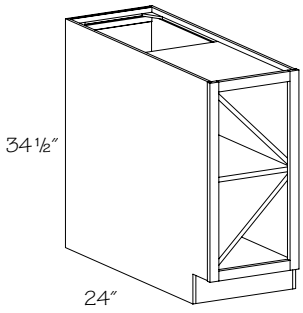

BODWC15
BODWC18
BODWC21

Grey color coding indicates new product, size or code.

	PE		IF
❖	APC		TWR
●	APFC	●	WR
	FPEB	●	XS
❖	MI		GD
	DE	●	RTK
	AD_E		RTKP
	CW	●	VTK
	RD		TKD
	CH		

- 11/16" (17.5 mm) thick shelves
- Shelves fixed into position and are ***not*** adjustable
- When Reduced Depth (RD) is selected, wine storage section will always be 12" deep. The cabinet when ordered from 24" deep to 12 1/16" deep will always have a back panel in the wine storage section that is up against the wine storage dividers

Base Filler Pull-out

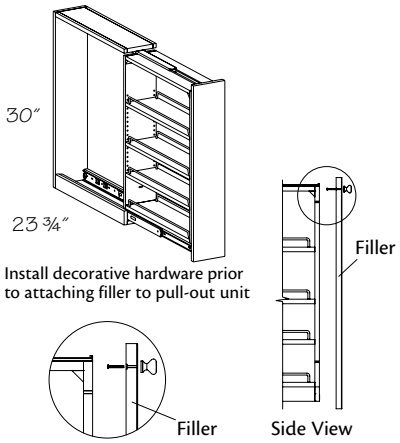

BFP3 1 3/4" shelf width
BFP6 4 3/4" shelf width

- Three adjustable shelves
- Unit slides on full extension side-mount runners
- Recommended installation is between two cabinets
- Installation may also be made between a cabinet and a wall or a cabinet and an end panel with stile
- Filler is included, but unattached. Unit should be installed before removing shipping brace and attaching filler
- A filler overlay is recommended for full overlay door styles; ***must*** be ordered separately
- Crafted or Quartersawn door styles will be supplied in plain sawn wood
- Painted hardwood supplied for EverCore™
- No toe kick

PE	IF
APC	TWR
APFC	WR
FPEB	XS
MI	GD
DE	RTK
AD_E	RTKP
CW	VTK
RD	TKD
CH	

Do ***not*** use filler pullouts (WFP, BFP, BSPP) at the end of cabinet runs or next to appliances. They ***must*** be installed between two cabinets or a cabinet and an end panel.

Consider using a Replacement Drawer Front (RDW3006) on a Base Filler Pullout (BFP) as an overlay for 1/2" door styles.

Base Tray Pull-out

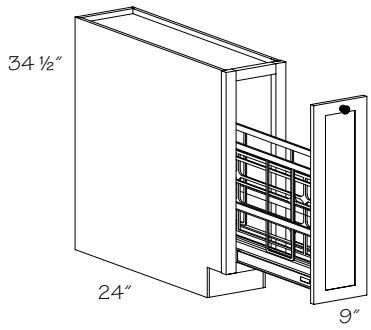

❊◆■ **BTP9**
BTP12

❊ Vanderbilt doors will have a solid, recessed flat panel
◆ Recessed Toe Kick Both Sides (RTKB) ***not*** available
■ Recessed Toe Kick Peninsula Both Sides (RTKPB) ***not*** available

- Unit slides on full extension under-mount Soft-Close runners
- Center tray divider can be removed
- Chrome rack with T-Bar included to subdivide sections for customized compartments

● PE	IF
● APC	TWR
● APFC	● WR
● FPEB	● XS
● MI	GD
● DE	☆ RTK
● AD_E	☆ RTKP
CW	● VTK
RD	TKD
CH	

Base Pantry Pull-out

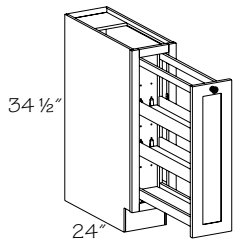

❊◆■ **BPP9** 4 1/2" shelf width
BPP12 7 1/2" shelf width

❊ Vanderbilt doors will have a solid, recessed flat panel
◆ Recessed Toe Kick Both Sides (RTKB) ***not*** available
■ Recessed Toe Kick Peninsula Both Sides (RTKPB) ***not*** available

- Two adjustable shelves
- One fixed wood shelf attached to the bottom of a full-height door
- Unit slides on full extension under-mount Soft-Close runners

● PE	IF
● APC	TWR
● APFC	● WR
● FPEB	● XS
● MI	GD
● DE	☆ RTK
● AD_E	☆ RTKP
CW	● VTK
RD	TKD
CH	

New

Base Cleaning Storage Cabinet

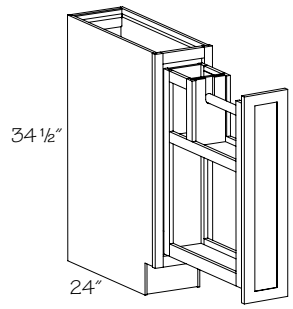

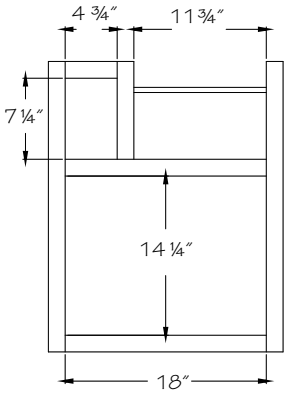

	Cabinet Width
BCS9	6⅝″
BCS12	9⅝″

❊†◆★■ **BCS9**
BCS12

- ❊ Recessed Toe Kick Both Sides (RTKB) ***not*** available
- † Toe Kick Drawer (TKD) option ***not*** available
- ◆ Recessed Toe Kick Peninsula Both Sides (RTKPB) ***not*** available
- ★ Available in full overlay door styles only
- ■ Frame rails are 15/16″ wide

Grey color coding indicates new product, size or code.

- Paper towel holder
- Upper and lower storage space
- Unit slides on full extension under-mount Soft-Close runners

●	PE		IF
●	APC		TWR
●	APFC	●	WR
●	FPEB	●	XS
	MI		GD
●	DE	☆	RTK
●	AD_E	☆	RTKP
	CW	●	VTK
	RD	☆	TKD
	CH		

New

Base Cleaning Storage Cabinet - w/Auto-Open Feature

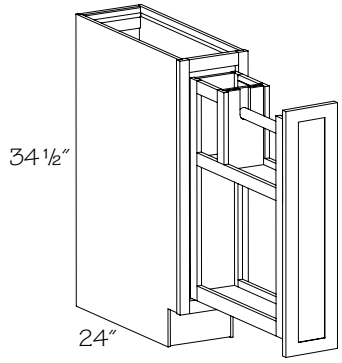

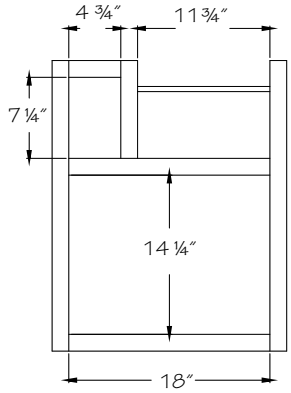

	Cabinet Width
BCS9•AO	6⅝″
BCS12•AO	9⅝″

❊◆†★■ **BCS9 •AO**
BCS12 •AO

- ❊ Recessed Toe Kick Both Sides (RTKB) ***not*** available
- ◆ Recessed Toe Kick Peninsula Both Sides (RTKPB) ***not*** available
- † Toe Kick Drawer (TKD) option ***not*** available
- ★ Available in full overlay door styles only
- ■ Frame rails are 15/16″ wide

Grey color coding indicates new product, size or code.

- Paper towel holder
- Upper and lower storage space
- Unit slides on full extension under-mount Soft-Close runners
- Pressing door front will activate Auto-open; closes like a standard drawer with Soft-Close
- Auto-open Kit (AO) requires 110V power source at back of cabinet
- Auto-open Kit (AO) feature offers programmable stop
- Permaset bumpers are ***not*** included on doors ordered with the Auto-open Kit (AO)
- ***Note:*** Auto-open Kit (AO) requires field installation

●	PE		IF
●	APC		TWR
●	APFC	●	WR
●	FPEB	●	XS
	MI		GD
●	DE	☆	RTK
●	AD_E	☆	RTKP
	CW	●	VTK
	RD	☆	TKD
	CH		

Base Utensil Pull-Out

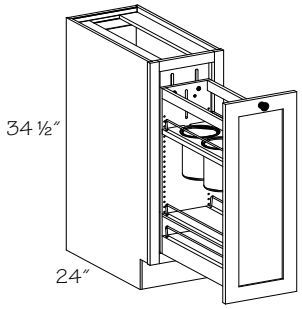

◆■† **BUP9** 5″ canisters
BUP12 5 1/2″ canisters

◆ Recessed Toe Kick Both Sides (RTKB) ***not*** available
■ Recessed Toe Kick Peninsula Both Sides (RTKPB) ***not*** available
† Toe Kick Drawer (TKD) option ***not*** available

- One adjustable shelf with three metal storage canisters and one adjustable plain shelf with chrome galley rails. Canister depth is 5 3/4″ for BUP9; 6 3/4″ for BUP12
- 9″ cabinet measures 5″ wide with 4 1/2″ clearance between the metal rails. Contains a secondary adjustable shelf
- 12″ cabinet measures 8″ wide with 7/12″ clearance between the metals rails. Does not contain a secondary adjustable shelf
- Unit slides on full extension under-mount Soft-Close runners

●	PE		IF
●	APC		TWR
●	APFC	●	WR
●	FPEB	●	XS
●	MI		GD
●	DE	☆	RTK
●	AD_E	☆	RTKP
	CW	●	VTK
	RD	☆	TKD
	CH		

Base Pantry Pull-out Utensil Storage

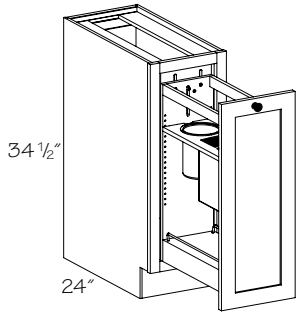

BPPUS12 7 1/2″ shelf width

- One adjustable shelf with two universal knife inserts measuring 4 3/4″ x 4 3/4″ x 9″ deep, and one steel utensil bin
- Unit slides on full extension under-mount Soft-Close runners

●	PE		IF
●	APC		TWR
●	APFC	●	WR
●	FPEB	●	XS
●	MI		GD
●	DE	●	RTK
●	AD_E	●	RTKP
	CW	●	VTK
	RD		TKD
	CH		

Tiered Pan and Lid Storage Pull-out

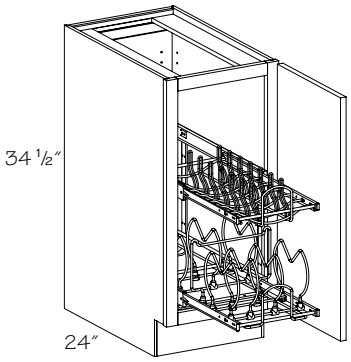

Specify R or L
B15 R or L•FH•TPLS

- Chrome wire roll-out unit
- Pull-out unit is 11 5/8″ wide
- Bottom portion of pull-out has movable dividers and is adjustable to accommodate different pan sizes
- Unit slides on full extension side-mount runners

●	PE		IF
●	APC	●	TWR
●	APFC	●	WR
●	FPEB	●	XS
●	MI		GD
●	DE	●	RTK
●	AD_E	●	RTKP
	CW	●	VTK
	RD	●	TKD
	CH		

Base Liter Bottle

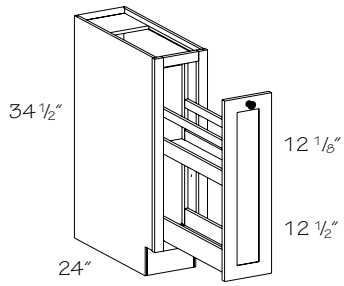

4 ½″ inside shelf width

BLB9

- Designed to hold ten 2-liter bottles; capacity may vary depending on bottle dimension
- Two fixed wood shelves attached to a full-height door
- Unit slides on heavy duty full extension runners with integrated buffer
- Vanderbilt doors will have a solid, recessed flat panel

☆ Recessed Toe Kick Both Sides (RTKB) ***not*** available
☆ Recessed Toe Kick Peninsula Both Sides (RTKPB) ***not*** available

- ***Note:*** 3-liter bottles will ***not*** fit

●	PE		IF
●	APC		TWR
●	APFC	●	WR
●	FPEB	●	XS
●	MI		GD
●	DE	☆	RTK
●	AD_E	☆	RTKP
	CW	●	VTK
	RD		TKD
	CH		

New

Base Step Stool Cabinet

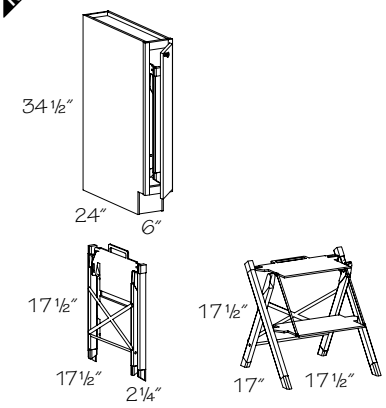

Specify R or L

BSS6 R or L

Grey color coding indicates new product, size or code.

●	PE		IF
●	APC		TWR
●	APFC	☆	WR
	FPEB	●	XS
●	MI		GD
	DE	☆	RTK
	AD_E	☆	RTKP
	CW	●	VTK
	RD		TKD
☆	CH		

- Available in full overlay only
- Frame rails are 15/16" wide
- Replacement Hinge: PHB6FO.SC
- Ladder Weight Capacity 250 pounds
- Door defaults to a slab design with an outside profile matching the selected door style

☆ Wide Rail Plain only (WR)

☆ Recessed Toe Kick Peninsula Both Sides (RTKPB) ***not*** available

☆ Recessed Toe Kick Both Sides (RTKB) ***not*** available

☆ Cannot be reduced less than 34 1/2" and max height is 42"

Base Spice Drawer Cabinet

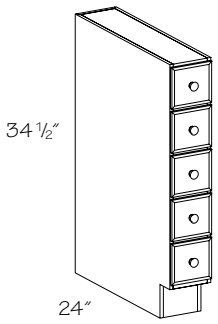

BSDC6

	PE		IF
	APC		TWR
	APFC		WR
	FPEB		XS
❖	MI		GD
	DE		RTK
	AD_E	☆	RTKP
	CW	●	VTK
	RD		TKD
	CH		

- Wood veneer construction with 1/2" end panels; not available in plywood
- Drawer boxes have 1/2" sides and 3/4" floor, front and back
- Interior drawer depth 22" from front to back
- Solid wood 1/2" thick slab drawer fronts with a radius edge. Outside profile will ***not*** match the selected door style
- Drawer front is adjustable
- All drawer boxes are Natural Birch wood veneer plywood
- Drawer box slides along wood guide. Wood guide is used to keep drawers from moving left to right
- Matching wood knobs included, ***not*** installed
- Vinyl edge banding applied to edges of cabinet
- Recommended installation is between two cabinets
- Replacement knobs available—use the following order codes: 161 for Birch and Maple; 171 for Cherry; 181 for Oak and Hickory; 191 for Alder; 634 for Thermofoils. See Decorative Hardware section of this book for description
- ***Not*** available in High-Gloss Foil or Wood-Grain Foil door styles
- ***Not*** available in Morristown; Melrose and Putnam supplied plain sawn

☆ Only available with Recessed Toe Kick Peninsula Back (RTKP); ***cannot*** accommodate Recessed Toe Kick for sides (RTKPB, RTKPL, RTKPR)

- ***Note:*** This cabinet features "frameless" type construction

Base Multi-Storage Pantry

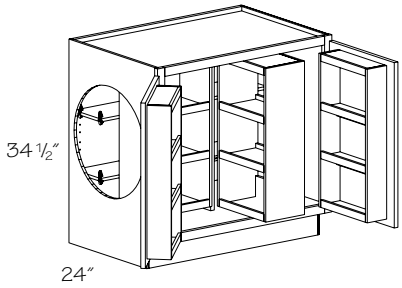

BMSP36

●	PE		IF
●	APC		TWR
●	APFC	●	WR
●	FPEB	●	XS
●	MI		GD
	DE	●	RTK
●	AD_E	●	RTKP
	CW	●	VTK
	RD	●	TKD
	CH		

- Adjustable 7 1/8" deep shelves
- Swing-out shelves operate within a 90° door opening
- Two 4" deep door storage racks with three fixed shelves
- Two 8" deep double sided swing-out storage racks with three fixed shelves
- Contrasting Back Options (CBEB, CPLB, CVGR) ***not*** available

Base Cooking Center

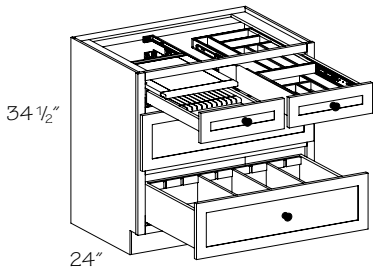

	# knife slots
BCC36	12

- Knife Section Cutting Center (KSCC18) in top left drawer
- Wood Tiered Drawer Storage (WTCD18) in top right drawer
- Two 7″ deep drawers with Adjustable Drawer Dividers (ADD)

● PE	IF
● APC	TWR
● APFC	● WR
● FPEB	● XS
MI	GD
● DE	● RTK
● AD_E	● RTKP
CW	● VTK
RD	● TKD
CH	

Base w/Pots and Pans Organizer

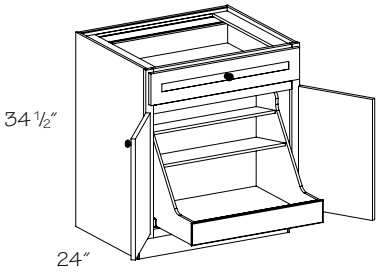

B30 BUTT•BPPSO
B36 BUTT•BPPSO

- 4″ high Roll-out Tray with integrated shelf system
- Roll-out sides and back are 3/4″ wood veneer plywood; the shelves are 1/2″ wood veneer plywood
- Includes full extension soft-close runners

● PE	IF
● APC	● TWR
● APFC	● WR
● FPEB	● XS
● MI	● GD
● DE	● RTK
● AD_E	● RTKP
CW	● VTK
RD	● TKD
CH	

Pedestal Drawer

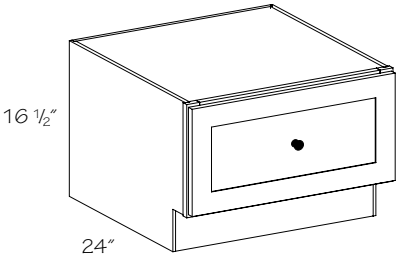

PSD18
PSD21
PSD24
PSD27
PSD30
PSD33
PSD36

- 24″ wide unit will house a single dishwasher drawer when installed between two cabinets
- ***Not*** intended for washing machines or dryers

This cabinet can be used for bench seating. Add a wood top for a finished look!

● PE	IF
● APC	TWR
● APFC	● WR
● FPEB	● XS
MI	GD
DE	RTK
● AD_E	RTKP
● CW	VTK
● RD	● TKD
CH	

Base Mixer Shelf

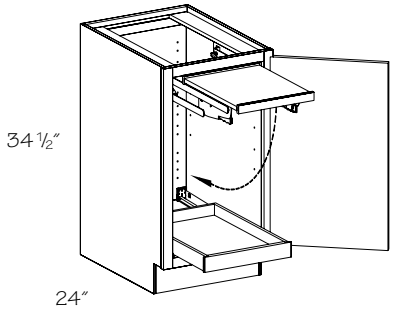

Specify R or L

BMS18 R or L
BMS21 R or L
BMS24 R or L
BMS24 BUTT

- Full-height door
- One Roll-out Tray (ROT)
- Bottom Rollout Tray includes full extension soft-close runners
- Maximum appliance height is 16″
- Lift mechanism includes a soft-close/cushion feature when lowered back into the cabinet
- Weight capacity is adjustable up to 60 lbs.; unit shipped at 30 lbs. capacity

● PE	IF
● APC	TWR
● APFC	● WR
● FPEB	● XS
● MI	● GD
DE	● RTK
● AD_E	● RTKP
CW	● VTK
RD	● TKD
CH	

Base Top Mount Wastebasket–Single Sidemount Soft-Close

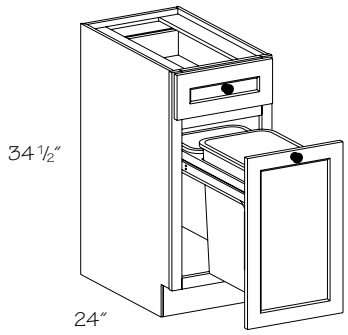

35 qt. capacity white basket
BWBT15 ▪SC

- Basket(s) rest in a Natural Maple plywood frame
- Basket(s) are easily removable for emptying or cleaning
- Frame slides on Soft-Close, full extension glides
- Optional Wastebasket Lid (WBL) available for 35 and 50 qt. wastebaskets
- Optional Wastebasket Drawer Partition (WDP) is available

● PE	● IF
● APC	● TWR
● APFC	● WR
● FPEB	● XS
MI	GD
● DE	● RTK
● AD_E	● RTKP
CW	● VTK
RD	● TKD
CH	

Base Top Mount Wastebasket–Double Sidemount Soft-Close

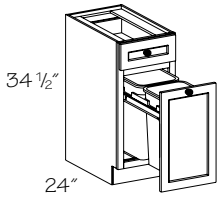

BWBT15▪2

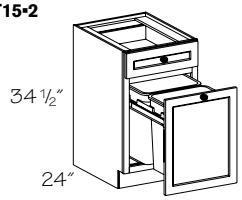

BWBT18▪2
BWBT24▪2

Two 27 qt. capacity white baskets
BWBT15 ▪2▪SC
Two 35 qt. capacity white baskets
BWBT18 ▪2▪SC
Two 35 qt. capacity white baskets
BWBT24 ▪2▪SC

- Basket(s) rest in a Natural Maple plywood frame
- Basket(s) are easily removable for emptying or cleaning
- Frame slides on Soft-Close, full extension glides
- Optional Wastebasket Lid (WBL) available for 35 and 50 qt. wastebaskets
- Optional Wastebasket Drawer Partition (WDP) is available

● PE	● IF
● APC	● TWR
● APFC	● WR
● FPEB	● XS
MI	GD
● DE	● RTK
● AD_E	● RTKP
CW	● VTK
RD	● TKD
CH	

Base Top Mount Wastebasket–Recycling Center Sidemount Soft-Close

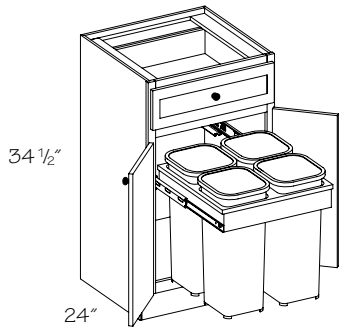

BWBT27 (Butt)▪4▪SC

- Four 27 qt. capacity white baskets
- Basket(s) rest in a Natural Maple plywood frame
- Basket(s) are easily removable for emptying or cleaning
- Frame slides on Soft-Close, full extension glides
- Doors are ***not*** attached to roll-out unit
- Available in full overlay door styles only
- Optional Wastebasket Drawer Partition (WDP) is available

● PE	● IF
● APC	● TWR
● APFC	● WR
● FPEB	● XS
MI	GD
● DE	● RTK
● AD_E	RTKP
CW	● VTK
RD	● TKD
CH	

Base Top Mount Wastebasket–Full-Height Sidemount Soft-Close

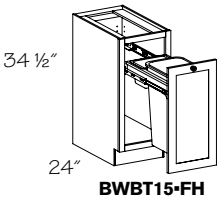

BWBT15▪FH

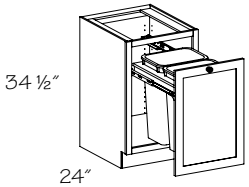

BWBT21▪2▪FH

BWBT15 ▪FH▪SC
BWBT21 ▪2▪FH▪SC

- One or two 50 qt. capacity white baskets
- Basket(s) rest in a Natural Maple plywood frame
- Basket(s) are easily removable for emptying or cleaning
- Frame slides on Soft-Close, full extension glides
- Optional Wastebasket Lid (WBL) available for 35 and 50 qt. wastebaskets

● PE	IF
● APC	TWR
● APFC	● WR
● FPEB	● XS
MI	GD
● DE	● RTK
● AD_E	● RTKP
CW	● VTK
RD	● TKD
CH	

Base Bottom Mount Wastebasket–Single w/Auto-open Kit

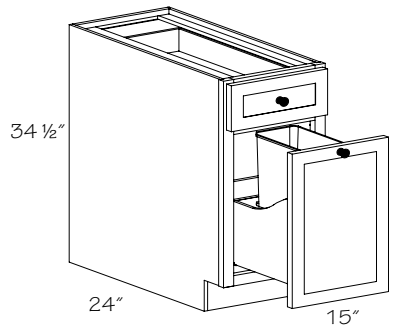

BWBB15 ▪AO

● PE	● IF
● APC	● TWR
● APFC	● WR
● FPEB	● XS
MI	GD
● DE	● RTK
● AD_E	● RTKP
CW	● VTK
RD	● TKD
CH	

- 35 qt. capacity grey basket(s)
- Basket(s) rest on dovetailed Maple drawer box
- Basket(s) are easily removable for emptying or cleaning
- Drawer box slides on Soft-Close, full extension glides
- Pressing door front will activate Auto-open; closes like a standard drawer with Soft-Close
- Auto-open Kit (AO) requires 110V power source at back of cabinet
- Auto-open Kit (AO) feature offers programmable stop
- Permaset bumpers are ***not*** included on doors ordered with the Auto-open Kit (AO)
- Optional Wastebasket Drawer Partition (WDP) is available
- ***Note:*** Auto-open Kit (AO) requires field installation

Base Bottom Mount Wastebasket–Single

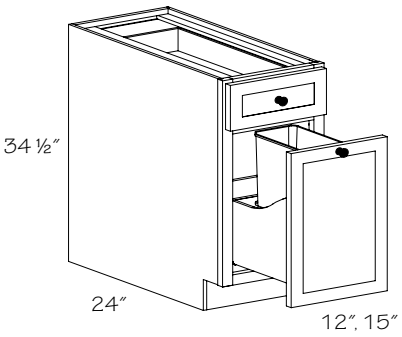

❄ **BWBB12**

30 qt. grey wastebasket

BWBB15

35 qt. grey wastebasket

❄ Available in full overlay door styles only

Grey color coding indicates new product, size or code.

● PE	● IF
● APC	● TWR
● APFC	● WR
● FPEB	● XS
MI	GD
● DE	● RTK
● AD_E	● RTKP
CW	● VTK
RD	● TKD
CH	

- Basket(s) rest on dovetailed Maple drawer box
- Basket(s) are easily removable for emptying or cleaning
- Drawer box slides on Soft-Close, full extension glides
- Optional Wastebasket Drawer Partition (WDP) is available

Base Bottom Mount Wastebasket–Double w/Auto-open Kit

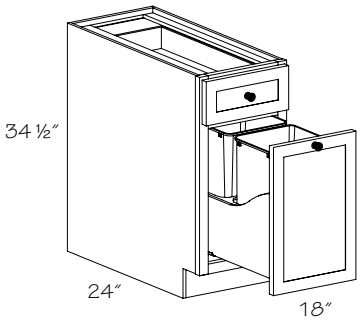

BWBB18 ▪2▪AO

● PE	● IF
● APC	● TWR
● APFC	● WR
● FPEB	● XS
MI	GD
● DE	● RTK
● AD_E	● RTKP
CW	● VTK
RD	● TKD
CH	

- 35 qt. capacity grey basket(s)
- Basket(s) rest on dovetailed Maple drawer box
- Basket(s) are easily removable for emptying or cleaning
- Drawer box slides on Soft-Close, full extension glides
- Permaset bumpers are ***not*** included on doors ordered with the Auto-open Kit (AO)
- Pressing door front will activate Auto-open; closes like a standard drawer with Soft-Close
- Auto-open Kit (AO) requires 110V power source at back of cabinet
- Auto-open Kit (AO) feature offers programmable stop
- One green wastebasket lid is included with cabinet. Lid can only be used with the front wastebasket. Replacement lids available in white and grey only
- Optional Wastebasket Drawer Partition (WDP) is available
- ***Note:*** Auto-open Kit (AO) requires field installation

Base Bottom Mount Wastebasket–Double

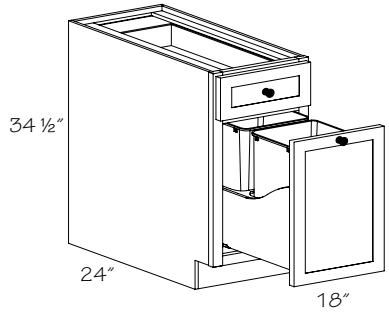

BWBB18 ▪2

● PE	● IF
● APC	● TWR
● APFC	● WR
● FPEB	● XS
MI	GD
● DE	● RTK
● AD_E	● RTKP
CW	● VTK
RD	● TKD
CH	

- 35 qt. capacity grey basket(s)
- Basket(s) rest on dovetailed Maple drawer box
- Basket(s) are easily removable for emptying or cleaning
- Drawer box slides on Soft-Close, full extension glides
- One green wastebasket lid is included with cabinet. Lid can only be used with the front wastebasket. Replacement lids available in white and grey only
- Optional Wastebasket Drawer Partition (WDP) is available

Base Accessories

RBFC	3	15
code	width	depth

Material dimensions listed may vary slightly from actual dimensions of the product.

Specifications subject to change without notice.

Construction Options and Modifications

❖ Included as standard
● Available with an upcharge
☆ Available with exceptions
(Blank) ***Not*** available

PE	Plywood Ends
APC	All Plywood Construction
APFC	All Plywood Furniture Construction
FPEB	Furniture Plywood Ends
MI	Matching Interior
CW	Change Width
RD	Reduced Depth
CH	Change Height
WR	Wide Bottom Rail
RTKP	Recessed Toe Kick Peninsula
VTK	Void Toe Kick

Wastebasket Lid

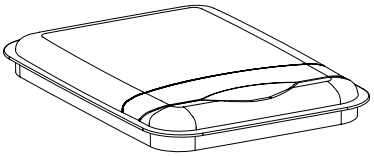

Fits 35 qt. Wastebaskets
WBL35▪G Grey
WBL35▪W White
Fits 50 qt. Wastebaskets
WBL50▪G Grey
WBL50▪W White

- Lid flips open manually
- Lid holds can liner in place

PE ❖
APC ❖
APFC ❖
FPEB ❖
MI ❖
CW ❖
RD ❖
CH ❖
WR ❖
RTKP ❖
VTK ❖

Replacement Wastebasket

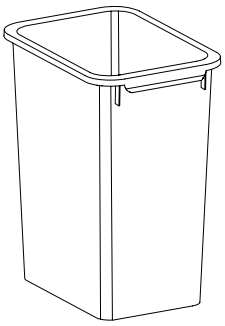

RWB27	27 qt.	White
RWB30	30 qt.	White
RWB35	35 qt.	White
RWB50	50 qt.	White
RCWB50	50 qt.	Grey

Grey color coding indicates new product, size or code.

- Field installation only
- Optional Wastebasket Lid (WBL) available for 35 and 50 qt. wastebaskets

PE ❖
APC ❖
APFC ❖
FPEB ❖
MI ❖
CW ❖
RD ❖
CH ❖
WR ❖
RTKP ❖
VTK ❖

Tiered Pan and Lid Storage Pull-out Kit

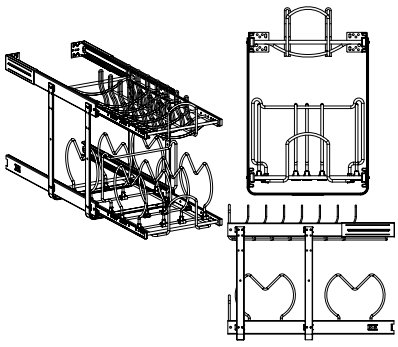

TPLSK15

- Fits into 15″ wide 24″ deep base full-height cabinets
- Overall unit height is 18″
- Chrome wire roll-out unit
- Pull-out unit is 11 5/8″ wide
- Unit slides on full extension side-mount runners
- Bottom portion of pull-out has movable dividers and is adjustable to accommodate different pan sizes

PE ❖
APC ❖
APFC ❖
FPEB ❖
MI ❖
CW ❖
RD ❖
CH ❖
WR ❖
RTKP ❖
VTK ❖

Base Cookware Storage Roll-out Field Installation

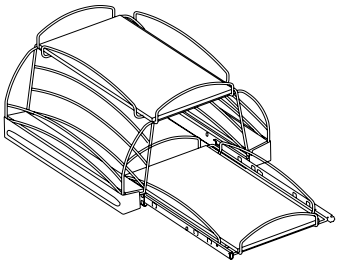

BCSRK24

- Fits into 24″ wide 24″ deep base or base full-height cabinets
- Satin nickel heavy duty wire rack
- Both shelves roll out independently of unit on full extension runners
- Shelf bottoms are Birch veneer
- Top shelf is 11″ x 21″, bottom shelf is 12″ x 21″
- Lower shelf has 9 1/2″ clearance
- Side racks are 2 3/8″ wide
- Field installation only

PE
APC
APFC
FPEB
MI
CW
RD
CH
WR
RTKP
VTK

Base Cookware Storage Roll-out Field Installation Chart

Cabinet	(Max) #BCSRKs
Base	2
Base•FH	3
Base•FH•40	3
Tall	5
Desk	1
Desk•FH	2
Vanity	2
Vanity•FH	3
VLC 88 ½″ H	3 (Top) 3 (Bottom)

Base Pots and Pans Organizer Roll-out Field Installation

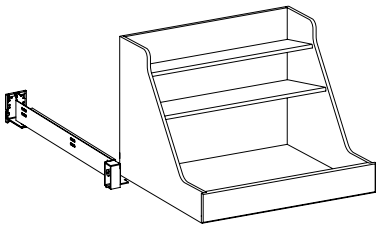

ROT30 •BPPSO
ROT36 •BPPSO

- 4″ high Roll-out Tray with integrated shelf system
- Roll-out sides and back are 3/4″ wood veneer plywood; the shelves are 1/2″ wood veneer plywood
- Includes full extension soft-close runners
- Mounting hardware and runners included
- 24″ depth only
- Field installation only

PE
APC
APFC
FPEB
MI
CW
RD
CH
WR
RTKP
VTK

Base Pots and Pans Organizer Field Installation Chart

Cabinet	(Max) #•BPPSOs
Base	1
Base•FH	1
Base•FH•40	1
Tall	1
Desk	N/A
Desk•FH	N/A
Vanity	N/A
Vanity•FH	N/A
VLC 88 ½″ H	N/A

Sink Base U-Shaped Deluxe Roll-out Tray-Field Installation

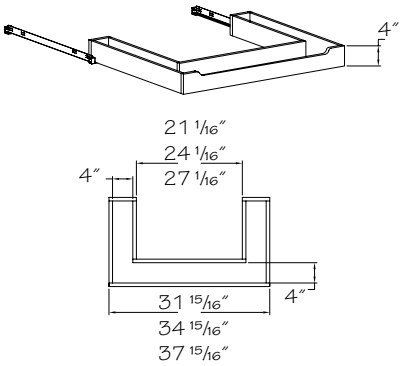

SBUDXROT36
SBUDXROT39
SBUDXROT42

- Roll-out trays are 4" deep, 5/8" solid wood dovetailed sides with 3 1/6" plywood bottom, notched front and full extension runners with soft-close hinges

PE
APC
APFC
FPEB
MI
CW
RD
CH
WR
RTKP
VTK

New

Replacement Deluxe Rollout Trays for BDDC Cabinet

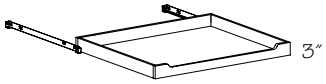

DXROT18•24•3
DXROT24•24•3
DXROT30•24•3
DXROT36•24•3
w/Reduced Depth (RD) option
DXROT18•21•3
DXROT24•21•3
DXROT30•21•3
DXROT36•21•3

Grey color coding indicates new product, size or code.

- Replacement 3" deluxe rollout tray for BDDC cabinet
- Mounting hardware and runners included

PE
APC
APFC
FPEB
MI
CW
RD
CH
WR
RTKP
VTK

Sink Base Shallow Deluxe Roll-out Tray-Field Installation

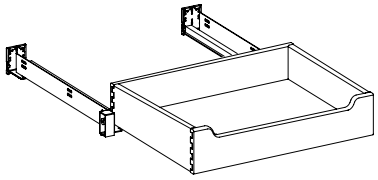

SBDXROT36 •21
SBDXROT39 •21
SBDXROT42 •21

- Tray is nominally 21" deep to allow clearance for plumbing

PE
APC
APFC
FPEB
MI
CW
RD
CH
WR
RTKP
VTK

Base Blind Corner Wood Lazy Susan Kit

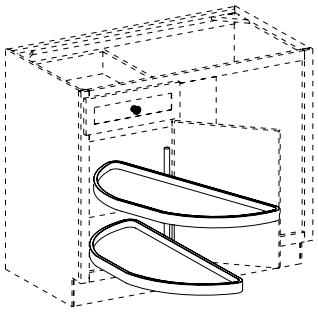

Specify R or L Blind
LSK42 R or L•WLS
LSK45 R or L•WLS
LSK48 R or L•WLS

- Available for 42", 45" and 48" base blind cabinets
- Kit includes two half circle shelves that rotate out individually and mounting hardware
- Rotating shelves have plywood floor and solid wood trim
- Right blind shown
- Field installation only

PE
APC
APFC
FPEB
MI
CW
RD
CH
WR
RTKP
VTK

Tray Dividers–Base

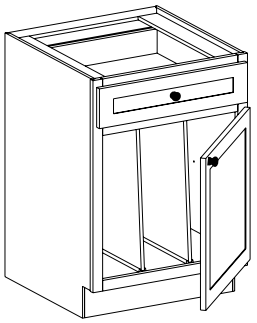

B24R-2TD shown

1TD
2TD
3TD
4TD
5TD
6TD

- 1/2" natural Birch Viraguard
- Available factory installed for 24" deep cabinets only
- ☆ Depth ***must*** be modified after tray divider is selected
- Installed in wood or plastic U-channels
- Shelves are eliminated when this option is selected
- Specify quantity and location
- Order Example: B24R-2TD-RD18 (spaced evenly)
- ***Not*** available in 40 1/2" high Base cabinets

PE
APC
APFC
FPEB
MI
CW
☆ RD
CH
WR
RTKP
VTK

Wire Tray Divider Kit

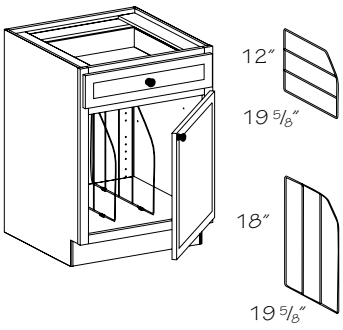

WTDK12 12" high
WTDK18 18" high

- Installation clips and screws included
- White epoxy coated wire
- Field installation only

PE
APC
APFC
FPEB
MI
CW
RD
CH
WR
RTKP
VTK

Adjustable Drawer Dividers

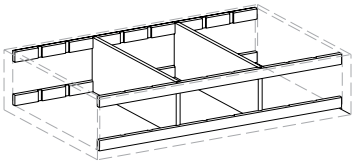

❄ **1ADD**
2ADD
Single Replacement Dividers Only

ADDIV•7•12 7" High 12" Deep Drawers
ADDIV•7•15 7" High 15"Deep Drawers
ADDIV•7•18 7" High 18" Deep Drawers
ADDIV•7•21 7" High 21" Deep Drawers
ADDIV•7•24 7" High 24" Deep Drawers
ADDIV•10•21 10" High 21" Deep Drawers
ADDIV•10•24 10" High 24" Deep Drawers
ADDIV•11•21 11" High 21" Deep Drawers
ADDIV•11•24 11" High 24" Deep Drawers

❄ Installed in bottom drawer of cabinets with 2 deep drawers

- Dividers are 1/2" thick and can be spaced approximately 3" apart
- Fits drawers of all 24"–42" Base cabinets
- For 24"–27" wide cabinets, two dividers supplied
- For 30"–42" wide cabinets, three dividers supplied
- Available factory installed only

PE
APC
APFC
FPEB
MI
CW
RD
CH
WR
RTKP
VTK

New

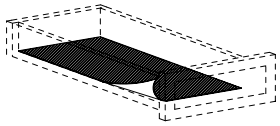

Non-slip drawer liner

24" Deep cabinets
9" Wide
NSDLK924 For B9
12" Wide
NSDLK1224 for B12
15" Wide
NSDLK1524 for B15 & B30•2D
18" Wide
NSDLK1824 for B18 & B36•2D
21" Wide
NSDLK2124 for B21
24" Wide
NSDLK2424 for B24 & B48
27" Wide
NSDLK2724 for B27
30" Wide
NSDLK3024 for B30
33" Wide
NSDLK3324 for B33
33" Wide 2-Drawer
NSDLK1624 for B33
36" Wide
NSDLK3624 for B36
39" Wide
NSDLK3924 for B39
39" Wide 2-Drawer
NSDLK1924 for B39
42" Wide
NSDLK4224 for B42

45" Wide 2-Drawer
NSDLK2224 for B45

24" Deep Deluxe Roll-out Trays
12" Wide
NSDLDXTK1224 for 12" wide 24" DXROT
15" Wide
NSDLDXTK1524 for 15" wide 24" DXROT
18" Wide
NSDLDXTK1824 for 18" wide 24" DXROT
21" Wide
NSDLDXTK2124 for 21" wide 24" DXROT
24" Wide
NSDLDXTK2424 for 24" wide 24" DXROT
27" Wide
NSDLDXTK2724 for 27" wide 24" DXROT
30" Wide
NSDLDXTK3024 for 30" wide 24" DXROT
33" Wide
NSDLDXTK3324 for 33" wide 24" DXROT
36" Wide
NSDLDXTK3624 for 36" wide 24" DXROT
Field Trim
NSDLR Roll-60" wide - Field trim to fit

PE APC APFC FPEB MI CW RD CH WR RTKP VTK

- Textured translucent lining to help prevent movement of items placed inside drawers
- Available cut to size, see available options
- Liners to not adhere to the drawer floor
- Also available as a roll (60" x 23 5/8")
- Field installation only
- Liners sold individually

Grey color coding indicates new product, size or code.

Drawer Partition

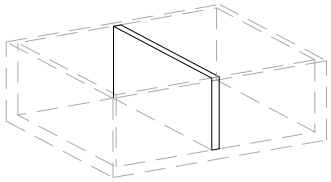

3/4" solid wood
DP24 ▪4 4" high drawers
DP24 ▪7 7" high drawers
DP24 ▪10 10" high drawers
3/4" plywood
DP24 ▪11 11" high drawers

- Fits drawers from front to back
- Field installation only

PE APC APFC FPEB MI CW RD CH WR RTKP VTK

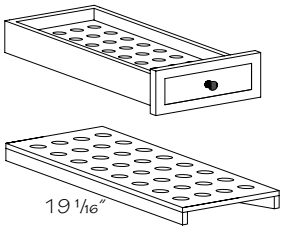

KCDOK15-KCDOK18

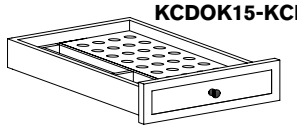

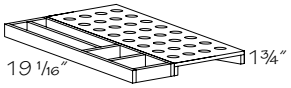

KCDOK21-KCDOK24

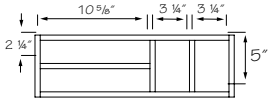

K-Cup® Drawer Organizer Kit-Field Installation

KCDOK15 32 K-Cups
KCDOK18 40 K-Cups
KCDOK21 32 K-Cups with 4 storage compartments
KCDOK24 40 K-Cups with 4 storage compartments

- Available for 24" deep cabinets only
- K-cup® is a registered trademark of Keurig Green Mountain, Inc.

PE APC APFC FPEB MI CW RD CH WR RTKP VTK

Sink Base Multi-Storage Shelf Kit

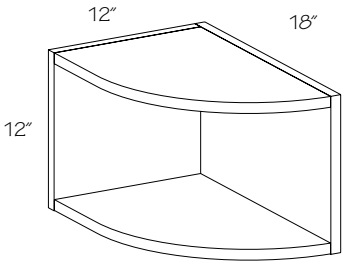

SBMSSK

- 3/4″ Natural Birch plywood
- Installation instructions included
- Field installation only

PE
APC
APFC
FPEB
MI
CW
RD
CH
WR
RTKP
VTK

Sliding Bread Box Lid

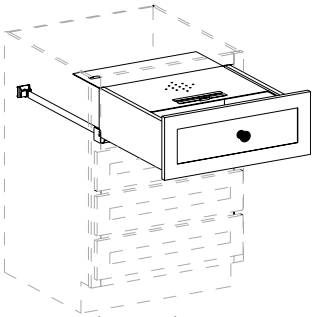

BD cabinet with IF
(Inverted Frame) option shown

SBB

- Fits deep drawer of all 15″–24″ base cabinets
- Textured acrylic lid
- Ventilated sliding top
- Order Example: BD18-SBB

PE
APC
APFC
FPEB
MI
CW
RD
CH
WR
RTKP
VTK

Bread Box or Kit

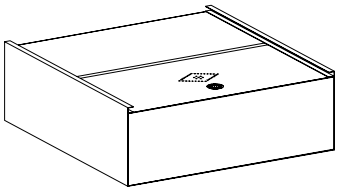

Installed	*Kit*
BB15	**BBK15**
BB18	**BBK18**
BB21	**BBK21**
BB24	**BBK24**

- Fits deep drawer of all 15″–24″ base cabinets
- Metal insert
- Ventilated sliding top
- Order Example:
  Factory Installed—BD18-BB18
  Field Installed Kit—BBK18

PE
APC
APFC
FPEB
MI
CW
RD
CH
WR
RTKP
VTK

Pull-out Table Kit

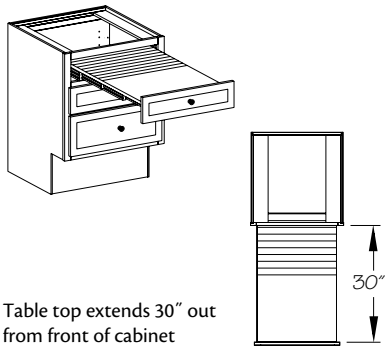

Table top extends 30″ out
from front of cabinet

POTK24

- Fits into standard 24" wide base cabinet (21" wide drawer opening)
- Load capacity 160 lbs.
- ***Must*** be installed prior to installation of countertop
- Top constructed of laminated Maple melamine
- ***Not*** for use in any freestanding cabinet. ***Must*** be secured to floor or wall
- ***Not*** designed to be used as a cutting board

PE
APC
APFC
FPEB
MI
CW
RD
CH
WR
RTKP
VTK

Utensil Tray or Kit

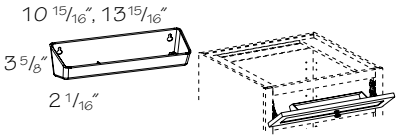

Cabinet	Tray	Order for field installed kit
SBA36	1-11"	UTK18
SFC40	2-11"	UTK30
SFA36	1-11"	UTK18
SFA39-42	1-14"	UTK24
SB18	1-11"	UTK18
SB21-27	1-14"	UTK*(cabinet width)*
SB30	2-11"	UTK*(cabinet width)*
SB33-48	2-14"	UTK*(cabinet width)*

Installed	*Kit*
UT	**UTK18**
	UTK21
	UTK24
	UTK27
	UTK30
	UTK33
	UTK36
	UTK39
	UTK42
	UTK45
	UTK48

- Almond or White, high-impact polystyrene tray
- Kit includes all mounting hardware
- Tilts down for convenient access to small cleaning items, etc.
- Order Example:
  Factory Installed—SB24-UT
  Field Installed Kit—UTK 24
- ***Note:*** When ordering for field installation, be sure to specify the cabinet width

PE
APC
APFC
FPEB
MI
CW
RD
CH
WR
RTKP
VTK

Stainless Utensil Tray or Kit

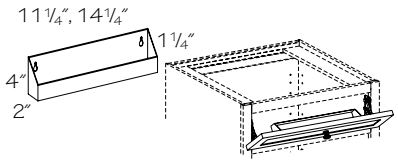

Cabinet	Tray	Order for field installed kit
SBA36	1-11"	SUTK18
SFA36	1-11"	SUTK18
SFA39-42	1-14"	SUTK24
SB18	1-11"	SUTK18
SB21-27	1-14"	SUTK*(cabinet width)*
SB30	2-11"	SUTK*(cabinet width)*
SB33-48	2-14"	SUTK*(cabinet width)*

Installed	*Kit*
SUT	**SUTK18**
	SUTK21
	SUTK24
	SUTK27
	SUTK30
	SUTK33
	SUTK36
	SUTK39
	SUTK42
	SUTK45
	SUTK48

- Stainless steel tray
- Tilts down for convenient access to small cleaning items, etc.
- Kit includes all mounting hardware
- Order Example:
  Factory Installed—SB18R-SUT
  Field Installed Kit—SUTK 18
- ***Note:*** When ordering for field installation, be sure to specify the cabinet width

PE
APC
APFC
FPEB
MI
CW
RD
CH
WR
RTKP
VTK

Knife Section or Kit

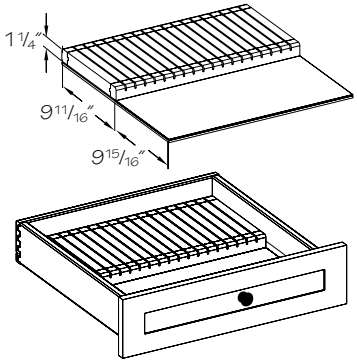

Installed	*# knife slots*
KS15	9
KS18	12
KS21	15
KS24	18
Kit	*# knife slots*
KSK15	9
KSK18	12
KSK21	15
KSK24	18

- Solid wood, slotted knife holder is 9 11/16" deep
- Cork pad protects drawer bottom, knife handles and edges
- Slots are 1/8" wide, spaced 1" apart

PE
APC
APFC
FPEB
MI
CW
RD
CH
WR
RTKP
VTK

Cutting Center or Kit

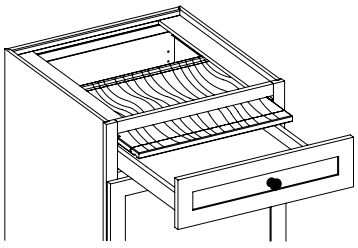

Installed	*Kit*
CC15	**CCK15**
CC18	**CCK18**
CC21	**CCK21**
CC24	**CCK24**

- 2 1/4" high drawer box with cutting board installed above
- Cutting board ***must*** be removed for use
- Order Example:
  Factory Installed—B15L-CC15
  Field Installed Kit—CCK15

PE
APC
APFC
FPEB
MI
CW
RD
CH
WR
RTKP
VTK

Knife Section Cutting Center or Kit

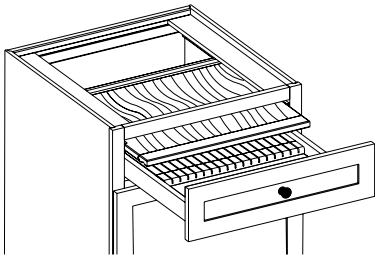

Installed	*# knife slots*
KSCC15	9
KSCC18	12
KSCC21	15
KSCC24	18
Kit	*# knife slots*
KSCCK15	9
KSCCK18	12
KSCCK21	15
KSCCK24	18

- 2 1/4" high drawer box with cutting board installed above
- Cutting board ***must*** be removed for use
- Has removable knife section installed in drawer
- Order Example:
  Factory Installed—B15L-KSCC15
  Field Installed Kit—KSCCK15

PE
APC
APFC
FPEB
MI
CW
RD
CH
WR
RTKP
VTK

Chopping Block or Kit

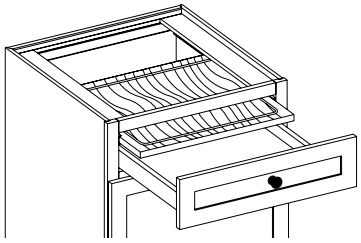

Installed	*Kit*
CHB18	**CHBK18**
CHB21	**CHBK21**
CHB24	**CHBK24**

- 2 1/4" high drawer box with 1 1/4" thick solid wood block installed above drawer box
- Chopping block ***must*** be removed for use
- ***Cannot*** be installed in one side of a double drawer (side by side) cabinet
- Order Example:
  Factory Installed—B18L-CHB18
  Field Installed Kit—CHBK18

PE
APC
APFC
FPEB
MI
CW
RD
CH
WR
RTKP
VTK

Cutting Board Door Rack Kit

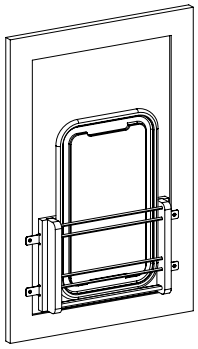

CBDMK18
Fits 18" doors - 9 3/4" x 15 3/4" cutting board

CBDMK21
Fits 21" doors - 13 3/4" x 15 3/4" cutting board

CBDMK24
Fits 24" doors - 13 3/4" x 15 3/4" cutting board

- Lightweight, high density polyethylene
- Able to be cleaned thoroughly, eliminating bacteria and odor
- Approved by FDA (Food and Drug Administration) ITEM 2.1 REG. #1CRF177.1520
- Approved by the National Sanitation Foundation No. 721
- ***Cannot*** be used with full-depth shelves or Roll-out Trays (ROT)
- Dishwasher safe up to 180° F
- Manufactured with high capacity juice grooves
- Non-abrasive; reduces the dulling of cutting blades
- Solid maple caddy with mounting sockets and screws

PE
APC
APFC
FPEB
MI
CW
RD
CH
WR
RTKP
VTK

New

Utensil Drawer Organizer - Angled -Field Install Kit

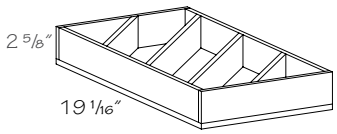

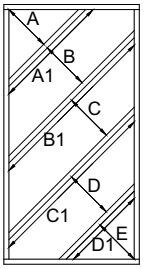

Kit

CDAK12
CDAK15
CDAK18
CDAK24

- For 24" deep cabinets only
- 3/8" thick solid wood dividers
- Unit is 2 9/16" high

PE
APC
APFC
FPEB
MI
CW
RD
CH
WR
RTKP
VTK

Grey color coding indicates new product, size or code.

Opening and Length Dimensions

	CDAK12	CDAK15	CDAK18	CDAK24
A	3 3/16"	3 1/8"	4"	4 7/8"
A1	7 3/16"	8"	8 11/16"	10 1/2"
B	3 3/16"	3 5/8"	3 11/16"	4 7/8"
B1	8 13/16"	13 1/16"	16 15/16"	21"
C	3 3/16"	3 5/8"	4 11/16"	4 7/8"
C1	8 13/16"	13 1/16"	16 15/16"	20 1/4"
D	3 3/16"	3 5/8"	3 11/16"	4 7/8"
D1	6 1/8"	7 1/16"	8"	9 3/4"
E	3 1/16"	3 9/16"	4"	4 7/8"

Cutlery Divider or Kit

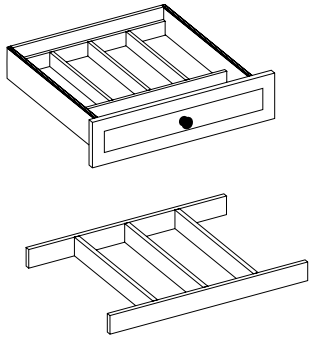

Installed	*Kit*	
CD12	**CDK12**	2 sections
CD15	**CDK15**	3 sections
CD18	**CDK18**	3 sections
CD21	**CDK21**	4 sections
CD24	**CDK24**	4 sections
CD27	**CDK27**	5 sections
CD30	**CDK30**	5 sections
CD33	**CDK33**	6 sections
CD36	**CDK36**	7 sections

- 1/2" thick solid wood dividers 1 3/4" high
- Each section is 13" deep and approximately 3 7/8" wide
- Order Example:
  Factory Installed—BD15-CD15
  Field Installed Kit—CDK15

PE
APC
APFC
FPEB
MI
CW
RD
CH
WR
RTKP
VTK

Stainless Cutlery Divider

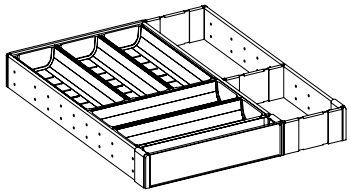

SCDK

- Adjustable, spring-loaded side rails
- Five removable stainless steel trays
- Fits standard drawers in cabinets 21"–27" wide and 24" deep
- Field installation only

Decorative Hardware should be installed prior to installing a Stainless Cutlery Divider

PE
APC
APFC
FPEB
MI
CW
RD
CH
WR
RTKP
VTK

Spice Drawer Insert or Kit

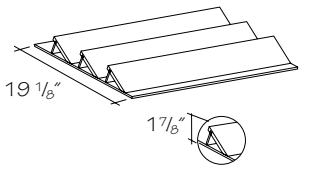

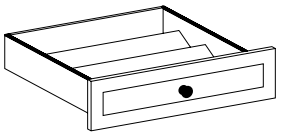

Installed	*Kit*
SDI12	**SDIK12**
SDI15	**SDIK15**
SDI18	**SDIK18**
SDI21	**SDIK21**
SDI24	**SDIK24**
SDI27	**SDIK27**
SDI30	**SDIK30**
SDI33	**SDIK33**
SDI36	**SDIK36**

- Solid wood insert holds spice containers at an angle for easy identification and removal
- Order Example:
  Factory Installed—B15R-SDI15
  Field Installed Kit—SDIK15

PE
APC
APFC
FPEB
MI
CW
RD
CH
WR
RTKP
VTK

New

Spice Caddy

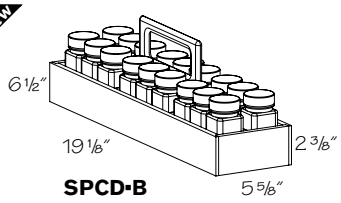

SPCD▪B

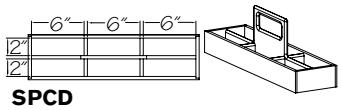

SPCD

With Bottles
SPCD ▪B
Without Bottles
SPCD

Grey color coding indicates new product, size or code.

- Supplied with 18 spice bottles
- Spice bottles measure
  1 3/4" x 1 3/4" x 4", 4 oz. capacity, clear glass
- Satin metal lids
- Use SPBTL for replacement spice bottles

PE
APC
APFC
FPEB
MI
CW
RD
CH
WR
RTKP
VTK

Wood Tiered Drawer Storage or Kit

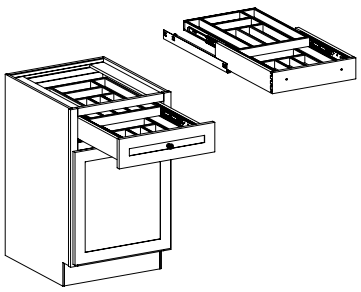

Installed Upper/ Lower Sections		*Kit*	
WTCD15	5/5	**WTCDK15**	5/5
WTCD18	6/6	**WTCDK18**	6/6
WTCD21	7/7	**WTCDK21**	7/7
WTCD24	8/8	**WTCDK24**	8/8
WTCD27	8/8	**WTCDK27**	8/8
WTCD30	9/9	**WTCDK30**	9/9

- Sliding top tray
- Available factory installed for 24" deep cabinets only
- Order Example:
  Factory Installed—BD15-WTCD15
  Field Installed Kit—WTCDK15

PE
APC
APFC
FPEB
MI
CW
RD
CH
WR
RTKP
VTK

New

Wood Tiered Drawer Storage Combination or Kit

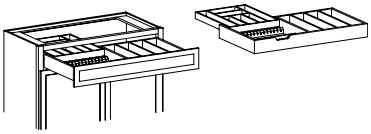

Installed
WTCDC30
WTCDC36
Kit
WTCDCK30
WTCDCK36

Grey color coding indicates new product, size or code.

- WTCDC30 or WTCDCK30:
  Lower left tiered section: Knife organizer (holds 12 knives), two storage compartments
  Upper Left tiered section: Four divided storage compartments, one long storage compartment
  Right section (***not*** tiered):
  Three long storage compartments
- WTCDC36 or WTCDCK36:
  Lower left tiered section: Knife organizer (holds 15 knives), two storage compartments
  Upper Left tiered section: Five divided storage compartments, one long storage compartment
  Right section (***not*** tiered):
  Four long storage compartments
- Available for 24" deep cabinets only

PE
APC
APFC
FPEB
MI
CW
RD
CH
WR
RTKP
VTK

Charging Drawer

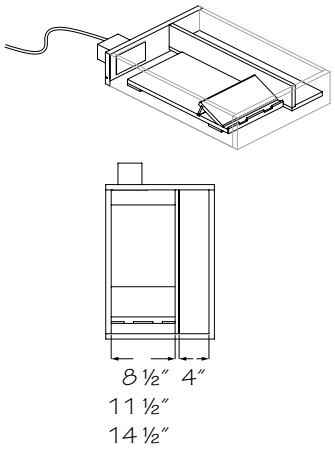

*Installed**	*Kit*	
	18″ Cabinet	
CGD18	**RBKCGD18**	(drawer box)
CGD21	**CGD18.DI**	(drawer insert)
CGD24	**CGD.OL**	(outlet)
	21″ Cabinet	
	RBKCGD21	(drawer box)
	CGD21.DI	(drawer insert)
	CGD.OL	(outlet)
	24″ Cabinet	
	RBKCGD24	(drawer box)
	CGD24.DI	(drawer insert)
	CGD.OL	(outlet)

- Solid wood drawer box
- One three-prong and Two USB outlets; cord length for outlet is 6 ft.
- Drawer box prepared for Outlet-Insert
- Requires separate power source in the back of the cabinet
- Installed: Outlet and drawer inserts shipped separately*
- Kits: Order one of each item to complete kit. Each component will ship separately
- Order Example:
  Factory Installed–
  BD18-CGD18
  Field Installed Kit–
  RBKCGD18, CGD18.DI, CGD.OL

PE APC APFC FPEB MI CW RD CH WR RTKP VTK

Sink Base Door Storage Unit or Kit

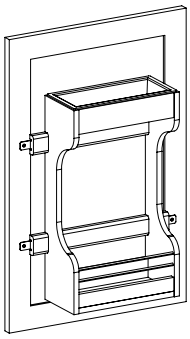

Specify R or L	
Installed	
SBDSU30 R or L	
SBDSU33 R or L	
SBDSU36 R or L	also fits SB18
SBDSU39 R or L	
SBDSU42 R or L	also fits SB21
Kit	
SBDSUK30	
SBDSUK33	
SBDSUK36	also fits SB18
SBDSUK39	
SBDSUK42	also fits SB21

- Solid wood
- Two fixed shelves, 4″ deep
- Kit includes all mounting hardware
- Rack is 5″ deep

PE APC APFC FPEB MI CW RD CH WR RTKP VTK

Sink Base Plastic Bag Door Storage Unit or Kit

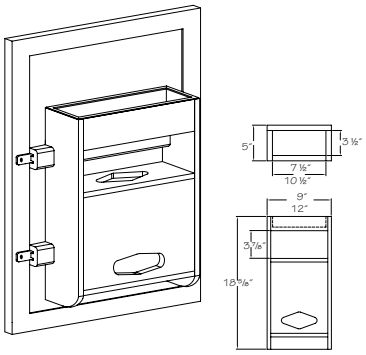

Specify R or L	
Installed	
SBPBS30 R or L	
SBPBS33 R or L	
SBPBS36 R or L	also fits SB18
SBPBS39 R or L	
Kit	
SBPBSK30	
SBPBSK33	
SBPBSK36	also fits SB18
SBPBSK39	

- Solid wood and plywood construction
- Kit includes all mounting hardware
- Rack is 5″ deep
- Removable, almond plastic tray lines upper shelf
- Bag storage box features two openings to insert and remove plastic bags

PE APC APFC FPEB MI CW RD CH WR RTKP VTK

Pegged Drawer Organizer

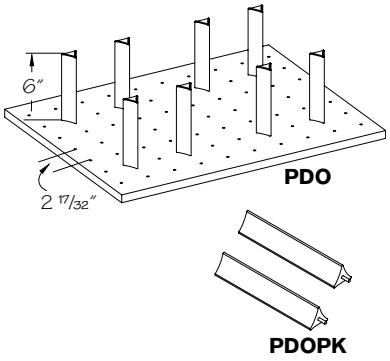

Kit	
PDO24	Six pegs
PDO27	Six pegs
PDO30	Eight pegs
PDO33	Eight pegs
PDO36	Ten pegs
PDO42	Ten pegs
Pack-Additional pegs	
PDOPK	Two pegs

- 3/4″ natural Birch plywood floor
- Sized to fit 24″ deep drawers
- Fits 7″ and 11″ high drawers
- Trimmable
- Shipped separately

PE APC APFC FPEB MI CW RD CH WR RTKP VTK

New

Multi-Sized Deep Drawer Organizer w/Food Storage and Multi-Sized Deep Drawer Organizer

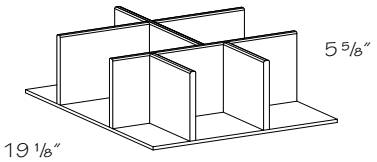

FSCIK21 SHOWN

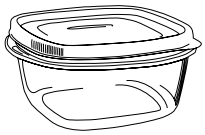

Organizer w/Food Storage

FSCIK18

FSCIK21

Deep Drawer Organizer

FSCI18

FSCI21

Grey color coding indicates new product, size or code.

- FSCIK18 is for use with 18" wide deep drawer (Example: BD18, BD18.3)
- FSCIK21 is for use with 21" wide deep drawer (Example: BD21, BD21.3)
- Containers are ***not*** covered under limited lifetime warranty

PE
APC
APFC
FPEB
MI
CW
RD
CH
WR
RTKP
VTK

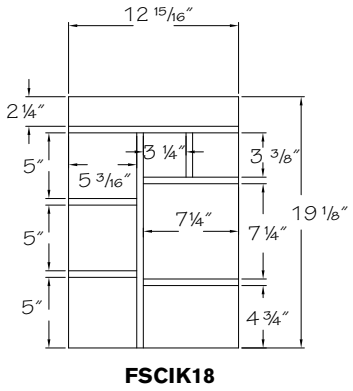

FSCIK18

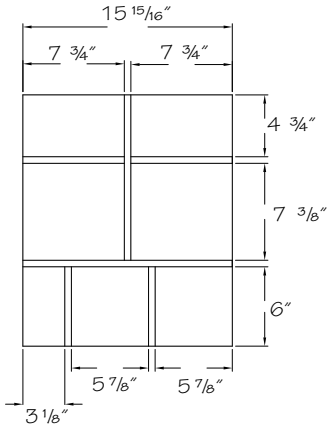

FSCIK21

Food Container Size (Includes Lids)

FSCIK18 Qty.	FSCIK21 Qty.	Container Cup Size
4	8	½
5	7	1 ¼
4	5	2
1	4	3
2	3	5
1	2	7

New

Deep Drawer Organizer w/Canister Storage and Deep Drawer Organizer w/Tall Canister Storage

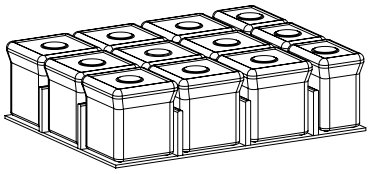

DCSK30 SHOWN

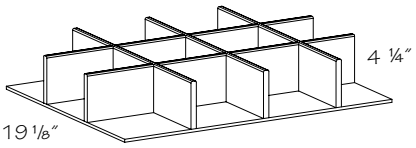

DCSK30 SHOWN

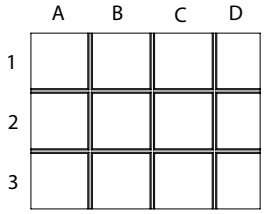

Canister Storage	*Contains:*
DCSK12	3-.9 liter containers -6.2" High
DCSK15	6-1.4 liter containers -6.2" High
DCSK18	6-2.3 liter containers -6.2" High
DCSK21	6-1.4 and 3-2.3 liter containers -6.2" High
DCSK24	3-1.4 and 6-2.3 liter containers -6.2" High
DCSK27	6-1.4 and 6-2.3 liter containers -6.2" High
DCSK30	3-1.4 and 9-2.3 liter containers -6.2" High
Tall Canister Storage	
DTCSK12	3-.9 liter containers -9.3" High
DTCSK15	6-1.4 liter containers -9.3" High
DTCSK18	6-2.3 liter containers -9.3" High
DTCSK21	6-1.4 and 3-2.3 liter containers -9.3" High
DTCSK24	3-1.4 and 6-2.3 liter containers -9.3" High
DTCSK27	6-1.4 and 6-2.3 liter containers -9.3" High
DTCSK30	3-1.4 and 9-2.3 liter containers -9.3" High

Grey color coding indicates new product, size or code.

- Deep Drawer Organizer w/Canister Storage (DCSK) are designed to fit into 7" high drawer boxes in cabinets that are 12", 15", 18", 21", 24", 27", and 30" wide
- Deep Drawer Organizer w/Tall Canister Storage (DTCSK) are designed to fit into 10" high drawer boxes in cabinets that are 12", 15", 18", 21", 24", 27", and 30" wide
- 1 liter is equal to 1.06 quarts
- Containers have an air tight seal
- Containers are ***not*** covered under limited lifetime warranty

PE
APC
APFC
FPEB
MI
CW
RD
CH
WR
RTKP
VTK

Base Cabinets

DCSK12

	A	B	C	D
1	6 15/16" X 6 1/16"			
2	6 15/16" X 6 1/16"			
3	6 15/16" X 6 1/16"			

DCSK15

	A	B	C	D
1	4 3/4" X 6 1/16"	4 3/4" X 6 1/16"		
2	4 3/4" X 6 1/16"	4 3/4" X 6 1/16"		
3	4 3/4" X 6 1/16"	4 3/4" X 6 1/16"		

DCSK18

	A	B	C	D
1	6 1/4" X 6 1/16"	6 1/4" X 6 1/16"		
2	6 1/4" X 6 1/16"	6 1/4" X 6 1/16"		
3	6 1/4" X 6 1/16"	6 1/4" X 6 1/16"		

DCSK21

	A	B	C	D
1	4 1/4" X 6 1/16"	4 1/4" X 6 1/16"	6 1/2" X 6 1/16"	
2	6 1/2" X 6 1/16"	4 1/4" X 6 1/16"	4 1/4" X 6 1/16"	
3	4 1/4" X 6 1/16"	4 1/4" X 6 1/16"	6 1/2" X 6 1/16"	

DCSK24

	A	B	C	D
1	6" X 6 1/16"	6" X 6 1/16"	6" X 6 1/16"	
2	6" X 6 1/16"	6" X 6 1/16"	6" X 6 1/16"	
3	6" X 6 1/16"	6" X 6 1/16"	6" X 6 1/16"	

DCSK27

	A	B	C	D
1	4 1/8" X 6 1/16"	6 1/8" X 6 1/16"	4 1/8" X 6 1/16"	6 1/8" X 6 1/16"
2	4 1/8" X 6 1/16"	6 1/8" X 6 1/16"	4 1/8" X 6 1/16"	6 1/8" X 6 1/16"
3	4 1/8" X 6 1/16"	6 1/8" X 6 1/16"	4 1/8" X 6 1/16"	6 1/8" X 6 1/16"

DCSK30

	A	B	C	D
1	6 1/4" X 6 1/16"	6 1/4" X 6 1/16"	6 1/4" X 6 1/16"	6 1/4" X 6 1/16"
2	6 1/4" X 6 1/16"	6 1/4" X 6 1/16"	6 1/4" X 6 1/16"	6 1/4" X 6 1/16"
3	6 1/4" X 6 1/16"	6 1/4" X 6 1/16"	6 1/4" X 6 1/16"	6 1/4" X 6 1/16"

New

Roll-Out Tray Organizer w/Canisters and Roll-Out Tray Organizer w/Tall Canisters

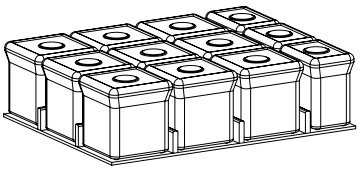

RCSK30 SHOWN

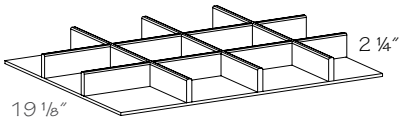

RCSK30 SHOWN

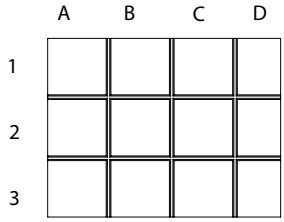

Canister Storage	*Contains:*
RCSK12	3-1.4 liter containers -6.2" High
RCSK15	6-2.3 liter containers -6.2" High
RCSK18	3-2.3 and 3-3.8 liter containers -6.2" High
RCSK21	6-2.3 and 3-3.8 liter containers -6.2" High
RCSK24	3-2.3 and 6-3.8 liter containers -6.2" High
RCSK27	6-2.3 and 6-3.8 liter containers -6.2" High
RCSK30	3-2.3 and 9-3.8 liter containers -6.2" High
Tall Canister Storage	
RTCSK12	3-1.4 liter containers -9.3" High
RTCSK15	6-2.3 liter containers -9.3" High
RTCSK18	3-2.3 and 3-3.8 liter containers -9.3" High
RTCSK21	6-2.3 and 3-3.8 liter containers -9.3" High
RTCSK24	3-2.3 and 6-3.8 liter containers -9.3" High
RTCSK27	6-2.3 and 6-3.8 liter containers -9.3" High
RTCSK30	3-2.3 and 9-3.8 liter containers -9.3" High

Grey color coding indicates new product, size or code.

- Deluxe Rollout Container Storage Kits are designed for Deluxe Rollouts in cabinets that are 12", 15", 18", 21", 24", 27", and 30" wide
- 1 liter is equal to 1.06 quarts
- Containers have an air tight seal
- Containers are ***not*** covered under limited lifetime warranty
- ***Note:*** Tall Canisters will ***not*** fit into both trays of Base cabinets with .2DXFWT. Tray height adjusments will be required on these cabinets for Tall Canisters to fit into a single tray

PE
APC
APFC
FPEB
MI
CW
RD
CH
WR
RTKP
VTK

RCSK12

	A	B	C	D
1	6 7/16" X 6 1/16"			
2	6 7/16" X 6 1/16"			
3	6 7/16" X 6 1/16"			

RCSK15

	A	B	C	D
1	4 1/2" X 6 1/16"	4 1/2" X 6 1/16"		
2	4 1/2" X 6 1/16"	4 1/2" X 6 1/16"		
3	4 1/2" X 6 1/16"	4 1/2" X 6 1/16"		

RCSK18

	A	B	C	D
1	6 7/8" X 6 1/16"	5 1/16" X 6 1/16"		
2	6 7/8" X 6 1/16"	5 1/16" X 6 1/16"		
3	6 7/8" X 6 1/16"	5 1/16" X 6 1/16"		

RCSK21

	A	B	C	D
1	4 5/16 X 6 1/16""	5 7/8" X 6 1/16"	4 5/16 X 6 1/16"	
2	4 5/16 X 6 1/16"	5 7/8" X 6 1/16"	4 5/16 X 6 1/16"	
3	4 5/16 X 6 1/16"	5 7/8" X 6 1/16"	4 5/16 X 6 1/16"	

RCSK24

	A	B	C	D
1	6 3/8" X 6 1/16"	4 11/16"X 6 1/16"	6 3/8" X 6 1/16"	
2	6 3/8" X 6 1/16"	4 11/16"X 6 1/16"	6 3/8" X 6 1/16"	
3	6 3/8" X 6 1/16"	4 11/16"X 6 1/16"	6 3/8" X 6 1/16"	

RCSK27

	A	B	C	D
1	4" X 6 1/16"	5 15/16" X 6 1/16"	4" X 6 1/16"	5 15/16" X 6 1/16"
2	4" X 6 1/16"	5 15/16" X 6 1/16"	4" X 6 1/16"	5 15/16" X 6 1/16"
3	4" X 6 1/16"	5 15/16" X 6 1/16"	4" X 6 1/16"	5 15/16" X 6 1/16"

RCSK30

	A	B	C	D
1	6 3/16" X 6 1/16	6 3/16" X 6 1/16	6 3/16" X 6 1/16	6 3/16" X 6 1/16
2	6 3/16" X 6 1/16	6 3/16" X 6 1/16	6 3/16" X 6 1/16	6 3/16" X 6 1/16
3	6 3/16" X 6 1/16	6 3/16" X 6 1/16	6 3/16" X 6 1/16	6 3/16" X 6 1/16

Deep Drawer Organizer

New

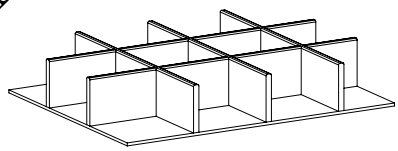

DCDK12 DCDK24
DCDK15 DCDK27
DCDK18 DCDK30
DCDK21

- Fits 6.2" and 9.3" high containers

PE APC APFC FPEB MI CW RD CH WR RTKP VTK

Roll-Out Tray Organizer

New

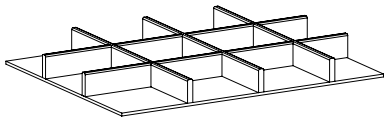

RCDK12 RCDK24
RCDK15 RCDK27
RCDK18 RCDK30
RCDK21

- Fits 6.2" and 9.3" high containers

PE APC APFC FPEB MI CW RD CH WR RTKP VTK

Sliding Towel Bar

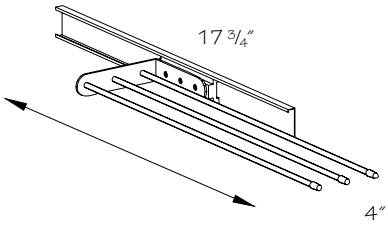

STB

- Mounts to cabinet end panel
- Pulls-out 8 3/4" for easy access
- Three satin finish chrome towel bars
- Field installation only

PE APC APFC FPEB MI CW RD CH WR RTKP VTK

Base Filler

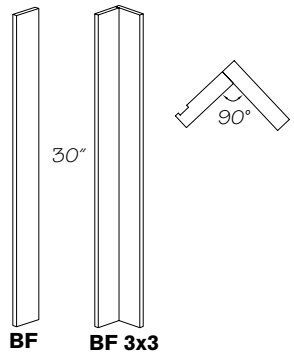

BF BF 3x3

BF3
BF6
BF3X3

- 3/4" thick solid wood
- Finished one side only
- Crafted or Quartersawn door styles will be supplied in plain sawn wood
- Painted hardwood supplied for EverCore™ and Thermofoil
- Painted or Stained hardwood supplied for Wood-Grain Foil door styles
- No toe kick

Remember to use fillers with full overlay door styles, especially square edge profiles, when cabinets will be against a return wall, box, pilaster or column. Use fillers on all overlays if there is case molding on a return wall. This will ensure proper clearance for drawers and roll-out tray access.

PE APC APFC FPEB MI CW RD CH WR RTKP VTK

Base Filler Overlay

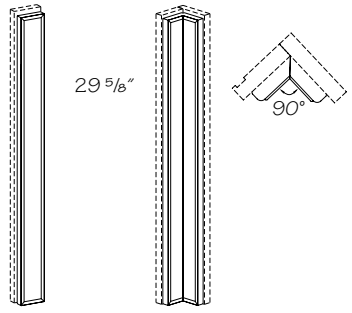

BFOL BFOL 3x3

BFOL3
BFOL6
▲ BFOL3X3

▲ Shipped as two pieces in Thermofoil and Wood-Grain Foil door styles. ***Must*** be field trimmed and mitered

- Available in full overlay door styles only
- Available in High-Gloss Foils finish except in 3X3 models
- Filler ordered separately
- Filler overlay has routed door profile and is made from the same material as doors and drawer fronts

PE APC APFC FPEB MI CW RD CH WR RTKP VTK

Base Inside Corner Angle Filler

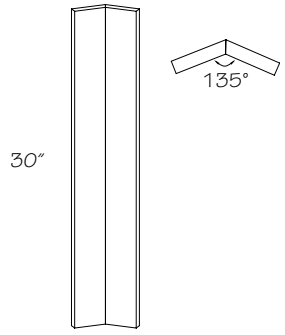

ICAF30

- 3/4" thick solid wood
- Crafted or Quartersawn door styles will be supplied in plain sawn wood
- Finished one side only
- Shipped in one piece
- ***Not*** available in Thermofoil door styles
- Painted hardwood supplied for EverCore™
- Painted or Stained hardwood supplied for Wood-Grain Foil door styles

PE APC APFC FPEB MI CW RD CH WR RTKP VTK

Base Inside Corner Angle Filler Overlay

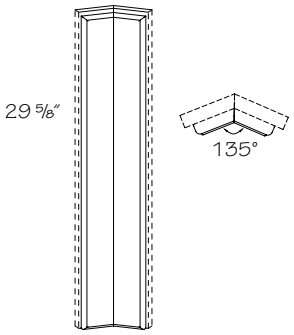

ICAFOL30

- 3/4" thick solid wood
- Available in full overlay door styles only
- Filler overlay has routed door profile and is made from the same material as doors and drawer fronts
- Filler ordered separately
- Quartersawn Oak door styles are 3/4" quartersawn wood with matching door profile on all sides. Quartersawn Cherry and Maple door styles are quartersawn wood veneer
- Shipped as two pieces
- ***Not*** available in Thermofoil door styles

PE
APC
APFC
FPEB
MI
CW
RD
CH
WR
RTKP
VTK

Base Fluted Filler

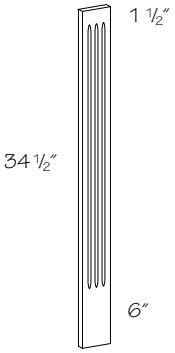

BFF3
BFF6

- 3/4" thick solid wood
- Painted hardwood supplied for EverCore™ and Thermofoil
- Painted or Stained hardwood supplied for Wood-Grain Foil door styles
- ***Not*** available in Morristown; Melrose and Putnam supplied plain sawn

PE
APC
APFC
FPEB
MI
CW
RD
CH
WR
RTKP
VTK

Plain Capital Base Fluted Filler

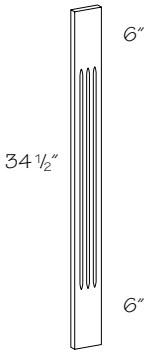

PCBFF3
PCBFF6

- 3/4" thick solid wood
- Painted hardwood supplied for EverCore™ and Thermofoil
- Painted or Stained hardwood supplied for Wood-Grain Foil door styles
- ***Not*** available in Morristown; Melrose and Putnam supplied plain sawn

PE
APC
APFC
FPEB
MI
CW
RD
CH
WR
RTKP
VTK

Rosette Base Fluted Filler

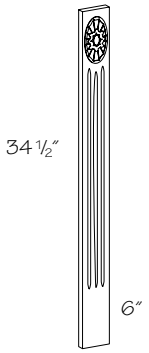

RBFF3

- 3/4" thick solid wood
- Applied decorative rosette
- Painted hardwood supplied for EverCore™ and Thermofoil
- ***Not*** available in Rustic Alder door styles
- ***Not*** available in Wood-Grain Foil door styles
- ***Not*** available in Morristown; Melrose and Putnam supplied plain sawn

PE
APC
APFC
FPEB
MI
CW
RD
CH
WR
RTKP
VTK

Rosette Base Fluted Filler Overlay

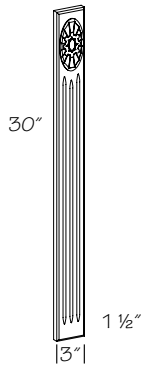

RFBFOL3

- 3/4" thick solid wood
- Applied decorative rosette
- Painted hardwood supplied for EverCore™ and Thermofoil
- ***Not*** available in Rustic Alder door styles
- ***Not*** available in Wood-Grain Foil door styles
- ***Not*** available in Morristown; Melrose and Putnam supplied plain sawn

PE
APC
APFC
FPEB
MI
CW
RD
CH
WR
RTKP
VTK

Filler Extension



Filler Extension

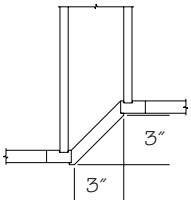

Filler Extension Application

FE3•30

- 3/4" thick solid wood
- Crafted or Quartersawn door styles will be supplied in plain sawn wood
- Painted hardwood supplied for EverCore™ and Thermofoil
- Painted or Stained hardwood supplied for Wood-Grain Foil door styles

PE
APC
APFC
FPEB
MI
CW
RD
CH
WR
RTKP
VTK

Fluted Filler Extension

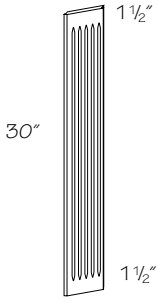

Fluted Filler Extension

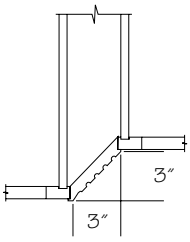

Filler Extension Application

FFE3•30

- 3/4" thick solid wood
- Painted hardwood supplied for EverCore™ and Thermofoil
- Painted or Stained hardwood supplied for Wood-Grain Foil door styles
- ***Not*** available in Morristown; Melrose and Putnam supplied plain sawn

PE
APC
APFC
FPEB
MI
CW
RD
CH
WR
RTKP
VTK

Base Box

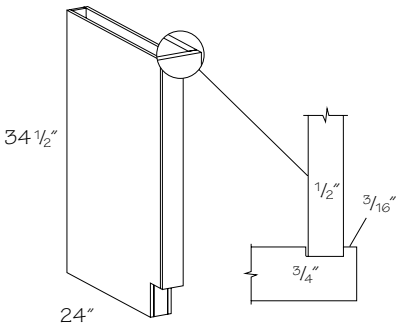

BB3

- Finished front and both sides
- Crafted or Quartersawn door styles will be supplied in plain sawn wood
- Painted hardwood supplied for EverCore™
- Painted or Stained hardwood supplied for Wood-Grain Foil door styles
- Reversible, may be used on either right or left end

☆ Only available with Recessed Toe Kick Peninsula Back (RTKP); ***cannot*** accommodate Recessed Toe Kick for sides (RTKPB, RTKPL, RTKPR)

● PE
● APC
● APFC
● FPEB
MI
CW
● RD
● CH
● WR
☆ RTKP
● VTK

Base Column

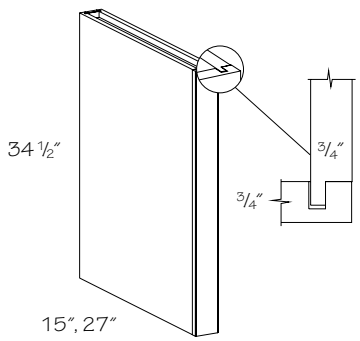

❍ **BC315**
BC615
❍ **BC327**
BC627

❍ Change Width (CW) option ***not*** available

- Front is 3/4″ solid wood
- Quartersawn Oak door styles have 3/4″ solid quartersawn wood front and quartersawn wood veneer end panels
- Painted hardwood supplied for EverCore™
- Foil-wrapped MDF supplied for Wood-Grain Foil door styles on face frame only
- Plain sawn material supplied for Barnet Crafted door styles
- Finished front and both sides
- Reversible, may be used on either right or left end

☆ APFC standard when APC option is selected

PE
● APC
☆ APFC
❖ FPEB
MI
☆ CW
● RD
● CH
❖ WR
RTKP
VTK

Base Fluted Column

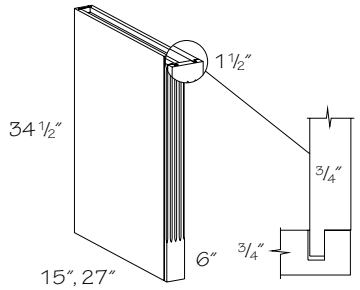

BFC315
BFC327

- Fluted front is 3/4″ solid wood; plain sawn wood supplied for quartersawn door styles
- Finished front and both sides
- Quartersawn Oak door styles have quartersawn wood veneer end panels
- Painted hardwood supplied for EverCore™
- Painted or Stained hardwood supplied for Wood-Grain Foil door styles
- Plain sawn material supplied for Barnet Crafted door styles
- Reversible, may be used on either right or left end
- ***Not*** available in Morristown

☆ APFC standard when APC option is selected

PE
● APC
☆ APFC
❖ FPEB
MI
CW
● RD
● CH
❖ WR
RTKP
VTK

Sterling Base Column

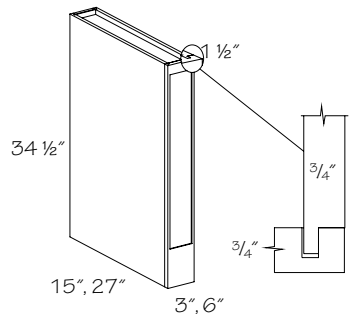

STBC315
STBC615
STBC327
STBC627

- Front is 3/4″ solid wood
- Finished front and both sides
- Available in Cherry, EverCore™, Maple and Wood-Grain Foil door styles only
- Painted hardwood supplied for EverCore™
- Painted hardwood supplied for Wood-Grain Foil door styles; only available in white
- Reversible, may be used on either right or left end

☆ APFC standard when APC option is selected

PE
● APC
☆ APFC
❖ FPEB
MI
CW
● RD
CH
❖ WR
RTKP
VTK

Plain Capital Sterling Base Column

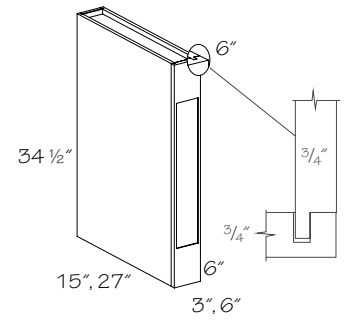

PCSTBC315
PCSTBC615
PCSTBC327
PCSTBC627

- Front is 3/4″ solid wood
- Finished front and both sides
- Available in Cherry, EverCore™, Maple, Rustic Alder and Wood-Grain Foil door styles only
- Painted hardwood supplied for EverCore™
- Painted hardwood supplied for Wood-Grain Foil door styles; only available in white
- Reversible, may be used on either right or left end

☆ APFC standard when APC option is selected

PE
● APC
☆ APFC
❖ FPEB
MI
CW
● RD
CH
❖ WR
RTKP
VTK

Plain Capital Base Fluted Column

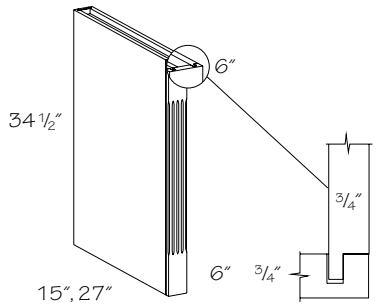

PCBFC315
PCBFC327

- Fluted front is 3/4" solid wood; plain sawn wood supplied for quartersawn door styles
- Quartersawn Oak door styles have quartersawn wood veneer end panels
- Painted hardwood supplied for EverCore™
- Painted or Stained hardwood supplied for Wood-Grain Foil door styles
- Plain sawn material supplied for Barnet Crafted door styles
- Finished front and both sides
- Reversible, may be used on either right or left end
- ***Not*** available in Morristown

☆ APFC standard when APC option is selected

PE
● APC
☆ APFC
❖ FPEB
MI
CW
● RD
● CH
❖ WR
RTKP
VTK

Rosette Base Fluted Column

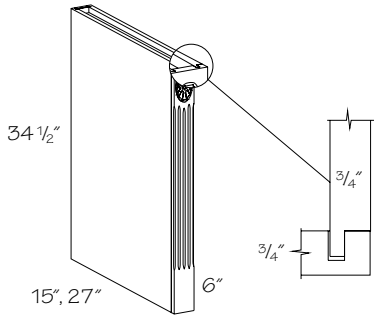

RBFC315
RBFC327

- Fluted front is 3/4" solid wood; plain sawn wood supplied for quartersawn door styles
- Applied decorative rosette
- Quartersawn Oak door styles have quartersawn wood veneer end panels
- Finished front and both sides
- Reversible, may be used on either right or left end
- Painted hardwood supplied for EverCore™ and Thermofoil
- Plain sawn material supplied for Barnet Crafted door styles
- ***Not*** available in Rustic Alder door styles
- ***Not*** available in Wood-Grain Foil door styles
- ***Not*** available in Morristown

☆ APFC standard when APC option is selected

PE
● APC
☆ APFC
❖ FPEB
MI
CW
● RD
● CH
❖ WR
RTKP
VTK

Base End Panel

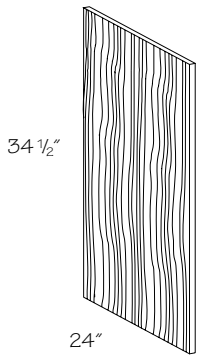

Viraguard

■ **VBEP** 24" x 34 1/2" x 3/4"

Wood Veneer

❄ **WBEP** 24" x 34 1/2" x 13/16"

■ ***Not*** available in Morristown; Melrose and Putnam supplied plain sawn

❄ Thermofoils are painted hardwood

- Edgebanded one long edge
- Finished to match exterior both sides

☆ APC panel only available in wood veneer

☆ APC panel is 11/16" thick

PE
☆ APC
APFC
FPEB
MI
CW
RD
● CH
WR
RTKP
VTK

Base End Panel w/Stile

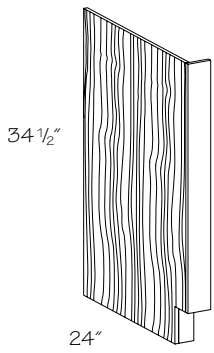

Specify R or L

❍ **BEP 1 1/2 R or L**
BEP3 R or L
BEP6 R or L

❍ Change Width (CW) option ***not*** available

- Exterior finished to match, interior is Natural Birch Viraguard and machined to match a cabinet end panel
- Left shown
- Crafted or Quartersawn door styles will be supplied in plain sawn wood
- Painted hardwood supplied for EverCore™

● PE
● APC
● APFC
● FPEB
● MI
☆ CW
● RD
● CH
● WR
RTKP
● VTK

Decorative Accent End Panel

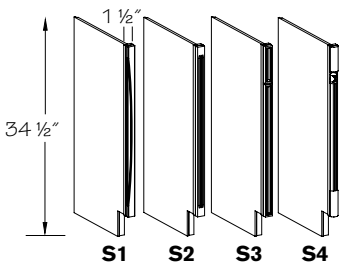

Specify R or L

DEP2434 R or L▪S1

DEP2434 R or L▪S2

DEP2434 R or L▪S3

❊ **DEP2434 R or L▪S4**

❊ ***Not*** available in Rustic Alder door styles

- Available in Alder, Cherry, EverCore™ and Maple full overlay door styles only
- Painted hardwood supplied for EverCore™ and Thermofoil
- Applied decorative accent mounted toward end panel
- End panel is trimmable
- ***Not*** available in High-Gloss Foil or Wood-Grain Foil door styles

PE
● APC
● APFC
❖ FPEB
● MI
CW
● RD
CH
WR
RTKP
VTK

Matching Base End Panel

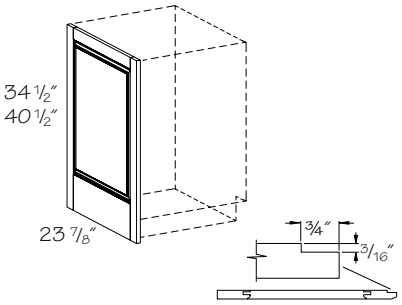

Standard edge detail—fits flush against 1/2″ end panel and behind face frame

Specify R or L
34 1/2″ High

MBEP R or L

40 1/2″ High

MBEP40 ▪R or L

Peninsula

■ **PMBEP**

■ ***Not*** available in Wood-Grain Foil door styles

Grey color coding indicates new product, size or code.

- 3/4″ thick panel with matching door edge profile on front edge only
- Peninsula panel has routed door profile front and back
- Foil and slab door styles do ***not*** have grooves and will ***not*** fit flush against 1/2″ end panel. A 3/16″ shim is recommended
- Inside of matching panel bottom rail will line up with inside bottom rail of door
- Left shown
- Field installation only
- ***Not*** available in mitered or Camby door styles; use End Panel–Mitered
- ***Not*** available in High-Gloss Foil door styles
- ***Not*** available in Morristown

☆ Wide Bottom Rail—field notch for toe kick

When designing with Matching End Panels the reveal will differ from the cabinet door height reveal. Matching End Panels cover the entire side of the cabinet. See drawing for exact measurements

PE
APC
APFC
FPEB
MI
● CW
RD
● CH
☆ WR
RTKP
VTK

Matching Base End Panel–Square Edges

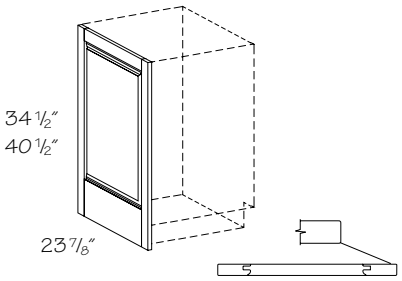

Will not fit flush against 1/2″ end panel, a 3/16″ shim is recommended

34 1/2″ High

MBEP ▪S

40 1/2″ High

MBEP40 ▪S

Grey color coding indicates new product, size or code.

- 3/4″ thick panel with square edge front and back
- Inside of matching panel bottom rail will line up with inside bottom rail of door
- Reversible, may be used on either right or left end
- Field installation only
- No frame recess dado
- ***Not*** available in High-Gloss Foil, Thermofoil or Wood-Grain Foil door styles
- ***Not*** available in mitered door styles; use End Panel–Mitered
- ***Not*** available in Morristown

☆ Wide Bottom Rail—field notch for toe kick

PE
APC
APFC
FPEB
MI
● CW
RD
● CH
☆ WR
RTKP
VTK

Furniture Matching Base End Panel

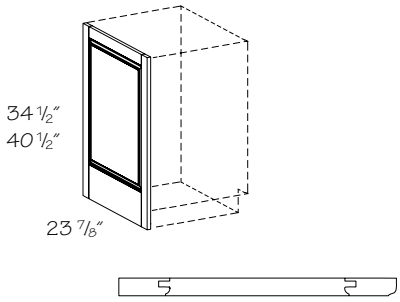

Standard edge detail—fits flush against 1/2″ end panel

Specify R or L
34 1/2″ High

FMBEP R or L

40 1/2″ High

FMBEP40 ▪R or L

Peninsula

FPMBEP

Grey color coding indicates new product, size or code.

- 3/4″ thick panel with matching door edge profile on front edge only
- Peninsula panel has routed door profile front and back
- Inside of matching panel bottom rail will line up with inside bottom rail of door
- For use with Furniture Plywood Ends (FPEB)—flush ends
- Left shown
- Field installation only
- ***Not*** available in mitered door styles; use End Panel–Mitered
- ***Not*** available in High-Gloss Foil or Wood-Grain Foil door styles
- ***Not*** available in Morristown

☆ Wide Bottom Rail—field notch for toe kick

When designing with Matching End Panels the reveal will differ from the cabinet door height reveal. Matching End Panels cover the entire side of the cabinet. See drawing for exact measurements

PE
APC
APFC
FPEB
MI
● CW
RD
● CH
☆ WR
RTKP
VTK

Matching Base End Panel–Mitered

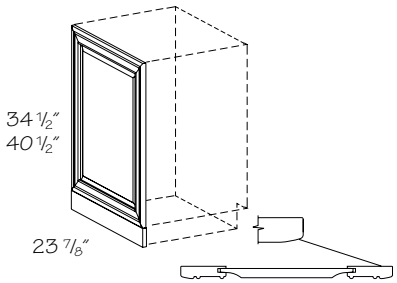

Will not fit flush against 1/2" end panel, a 3/16" shim is recommended

34 1/2" High

M▪MBEP

40 1/2" High

M▪MBEP40

Grey color coding indicates new product, size or code.

- 3/4" thick panel with matching door edge profile on four sides
- Inside of matching panel bottom rail will line up with inside bottom rail of door
- Available in mitered and Camby door styles only
- Reversible, may be used on either right or left end
- Field installation only
- Toe kick shipped unattached

☆ Wide Bottom Rail—field notch for toe kick

	PE
	APC
	APFC
	FPEB
	MI
●	CW
	RD
●	CH
☆	WR
	RTKP
	VTK

Overlay Panel For Base Blind Corner Cabinets

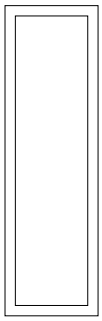

OPWBC30

- Available in full overlay door styles only
- Field miter
- Overlay Panel has routed door profile and is made from the same material as doors and drawer fronts

	PE
	APC
	APFC
	FPEB
	MI
	CW
	RD
	CH
	WR
	RTKP
	VTK

Toe Kick

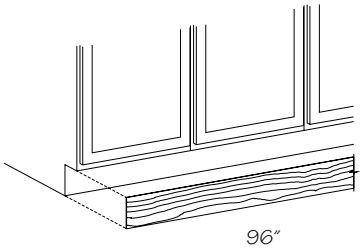

Black

† **BLTK8**
- 1/8" thick hardboard, 4 1/2" high

■ **MTK8**
- 1/8" thick hardboard, 4 1/2" high, laminated with matching Viraguard

Aluminum finish

MTK8 ▪A
- 1/16" thick flexible laminate, 4 1/2" high

Stainless finish

MTK8 ▪S
- 1/16" thick flexible laminate, 4 1/2" high

❄▲**WMTK8**
- 3/16" thick wood veneer, 4 1/2" high, to match

† Painted hardwood supplied for EverCore™

■ ***Not*** available in Morristown; Melrose and Putnam supplied plain sawn

❄ Painted hardwood supplied for EverCore™ and Thermofoil

▲ Painted or Stained hardwood supplied for Wood-Grain Foil door styles

- Edges are unfinished
- Field installation only
- ***Note:*** Matching toe kick is ***not*** automatically supplied with cabinets. It ***must*** be ordered as a separate item

Apply Shoe molding (SHO8) at the base of Matching Toe Kicks or Wood Matching Toe Kicks (MTK8 or WMTK8) for a nice, finished look.

	PE
	APC
	APFC
	FPEB
	MI
	CW
	RD
	CH
	WR
	RTKP
	VTK

Diagonal Installation of Standard Base Cabinets

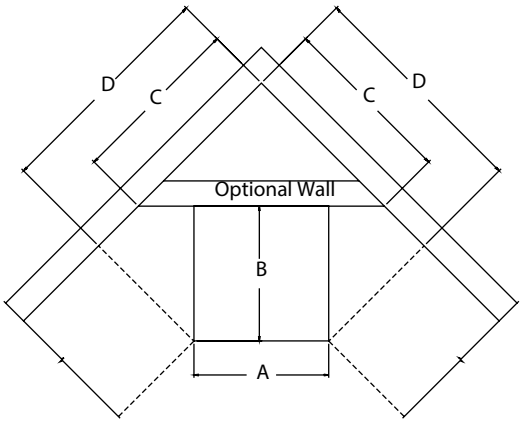

Note: Fillers are always recommended at both sides of cabinet junction points to allow for wall variations and drawer clearances.

Cabinet Width A	Cabinet Depth B	Wall Dimensions C	Wall Dimensions D
12″	24″	22 ½″	32 ½″
15″	24″	24 ⅝″	34 ⅝″
18″	24″	26 ¾″	36 ¾″
21″	24″	28 ⅞″	38 ⅞″
24″	24″	31″	41″
27″	24″	33 ⅛″	43 ¼″
30″	24″	35 ¼″	45 ¼″
33″	24″	37 ⅜″	47 ⅜″
36″	24″	39 ½″	49 ½″
39″	24″	41 ⅝″	51 ⅝″
42″	24″	43 ¾″	53 ¾″
45″	24″	45 ⅞″	55 ⅞″
48″	24″	48″	58″

Tall Cabinets

PS	18	24	84
code	width	depth	height

Construction Options and Modifications

❖	Included as standard
●	Available with an upcharge
☆	Available with exceptions
(Blank)	***Not*** available

Note: Standard tall cabinet box depth is 12" or 24" unless stated otherwise. Add door thickness with bumpers for total depth.

When BUTT is in all capitals, it ***must*** be included as part of your ordering nomenclature. A (Butt) in parentheses is for your information and isn't required on an order form.

Material dimensions listed may vary slightly from actual dimensions of the product. Specifications subject to change without notice.

PE	Plywood Ends
APC	All Plywood Construction
APFC	All Plywood Furniture Construction
FPEB	Furniture Plywood Ends
MI	Matching Interior
DE	Integrated Decorative End
OE	Operational End
AD_E	Attached Decorative End
CW	Change Width
RD	Reduced Depth
ID	Increased Depth
CH	Change Height
IF	Inverted Frame
WR	Wide Bottom Rail
XS	Extended Stile
GD	Glass Doors
RTK	Recessed Toe Kick
VTK	Void Toe Kick
TKD	Toe Kick Drawer

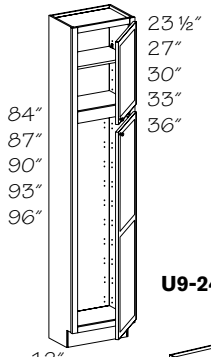

U9-24

12"

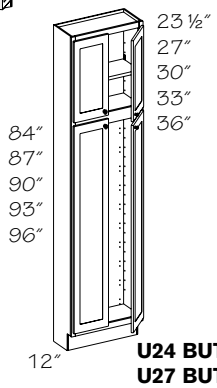

12"

U24 BUTT - U27 BUTT

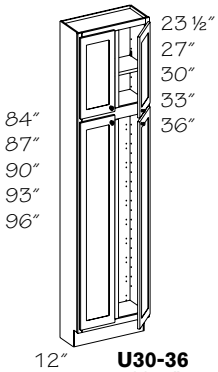

12"

U30-36
with 3" center stile

Utility Cabinets 12" Deep

Specify R or L
84" High

❇❍✛ **U91284 R or L**
U121284 R or L
U151284 R or L
U181284 R or L
U211284 R or L
U241284 R or L
❍ **U241284 BUTT**
U271284 (Butt)
◆ **U301284**
U301284 BUTT
◆ **U331284**
U331284 BUTT
◆ **U361284**
U361284 BUTT

87" High

❇❍✛ **U91287 R or L**
U121287 R or L
U151287 R or L
U181287 R or L
U211287 R or L
U241287 R or L
❍ **U241287 BUTT**
U271287 (Butt)
◆ **U301287**
U301287 BUTT
◆ **U331287**
U331287 BUTT
◆ **U361287**
U361287 BUTT

90" High

❇❍✛ **U91290 R or L**
U121290 R or L
U151290 R or L
U181290 R or L
U211290 R or L
U241290 R or L
❍ **U241290 BUTT**
U271290 (Butt)
◆ **U301290**
U301290 BUTT
◆ **U331290**
U331290 BUTT
◆ **U361290**
U361290 BUTT

Specify R or L
93" High

❇❍✛ **U91293 R or L**
U121293 R or L
U151293 R or L
U181293 R or L
U211293 R or L
U241293 R or L
❍ **U241293 BUTT**
U271293 (Butt)
◆ **U301293**
U301293 BUTT
◆ **U331293**
U331293 BUTT
◆ **U361293**
U361293 BUTT

96" High

❇❍✛ **U91296 R or L**
U121296 R or L
U151296 R or L
U181296 R or L
U211296 R or L
U241296 R or L
❍ **U241296 BUTT**
U271296 (Butt)
◆ **U301296**
U301296 BUTT
◆ **U331296**
U331296 BUTT
◆ **U361296**
U361296 BUTT

- Includes adjustable shelves in upper section: 84" & 87" high—one shelf; 90" & 93" high—two shelves; 96" high—three shelves
- No center rail on tall door for Argonne, Avery, Barnet, Camby, Chanlott, Cornell, Courtney, Evana, Evana Cathedral, Ferguson, Garrison, Halden, Harrington, Jamison, Jovana, Judson, Kendrick, Layden, Lockeford, Maxton, Parker House, Rutherford, Shepparton, Sheridan, Sydney, Tennyson, Vanderbilt door styles or doors with glass inserts
- Toe kick is shipped separately on 93" & 96" high cabinets

☆ Wide Bottom Rail (WR) and Recessed Toe Kick (RTK) ***not*** available on 93" & 96" high cabinets

☆ Void Toe Kick (VTK) is ***not*** available on 93" and 96" high cabinets

☆ When Inverted Frame (IF) is chosen in arched door styles, U18, U24, U24BUTT and U36, cabinets will have arched doors. All other cabinet sizes will be supplied with square doors

☆ Operational End (OE) is ***not*** available with Reduced Depth (RD) option

☆ Glass on top and bottom - select glass designs only

- ***Note:*** Shelf Kit (SK) for lower section ***must*** be ordered separately; see Shelving section of this book

●	PE
●	APC
●	APFC
●	FPEB
●	MI
●	DE
●	OE
●	AD_E
☆	CW
☆	RD
	ID
●	CH
☆	IF
☆	WR
●	XS
☆	GD
☆	RTK
☆	VTK
	TKD



Remember to order a 3/16" skin (WSK) for the exposed ends of 93" & 96" high cabinets to conceal the seam between the loose toe kick and the cabinet.

❇ Doors are square except full overlay arch door styles. Thermofoil door styles will always be square. Vanderbilt doors will have a solid, recessed flat panel

❍ Change Width (CW) option ***not*** available

✛ Glass door option ***not*** available

◆ 3" center stile

Note: *Remember to remove the white plastic "feet" from the bottom of all tall cabinets before installation. Their sole purpose is to protect the floor after the cabinets are unboxed. Leaving them on will result in uneven installation.*

Utility Cabinets 24" Deep

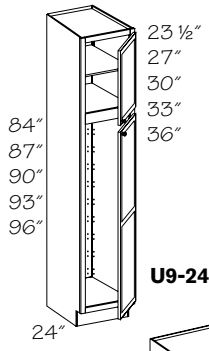

U9-24

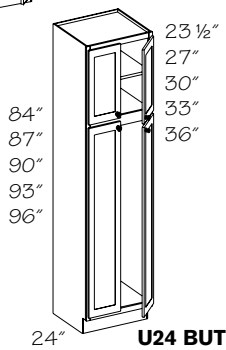

U24 BUTT-
U27 BUTT

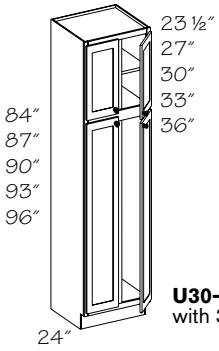

U30-36
with 3" center stile

Specify R or L
84" High

❄❍▲†**U92484 R or L**
U122484 R or L
U152484 R or L
U182484 R or L
U212484 R or L
U242484 R or L
❍ **U242484 BUTT**
U272484 (Butt)
◆ **U302484**
U302484 BUTT
◆ **U332484**
U332484 BUTT
◆ **U362484**
U362484 BUTT

87" High

❄❍▲†**U92487 R or L**
U122487 R or L
U152487 R or L
U182487 R or L
U212487 R or L
U242487 R or L
❍ **U242487 BUTT**
U272487 (Butt)
◆ **U302487**
U302487 BUTT
◆ **U332487**
U332487 BUTT
◆ **U362487**
U362487 BUTT

90" High

❄❍▲ **U92490 R or L**
U122490 R or L
U152490 R or L
U182490 R or L
U212490 R or L
U242490 R or L
❍ **U242490 BUTT**
U272490 (Butt)
◆ **U302490**
U302490 BUTT
◆ **U332490**
U332490 BUTT
◆ **U362490**
U362490 BUTT

Specify R or L
93" High

❄❍▲ **U92493 R or L**
U122493 R or L
U152493 R or L
U182493 R or L
U212493 R or L
U242493 R or L
❍ **U242493 BUTT**
U272493 (Butt)
◆ **U302493**
U302493 BUTT
◆ **U332493**
U332493 BUTT
◆ **U362493**
U362493 BUTT

96" High

❄❍▲ **U92496 R or L**
U122496 R or L
U152496 R or L
U182496 R or L
U212496 R or L
U242496 R or L
❍ **U242496 BUTT**
U272496 (Butt)
◆ **U302496**
U302496 BUTT
◆ **U332496**
U332496 BUTT
◆ **U362496**
U362496 BUTT

- Includes adjustable shelves in upper section: 84" & 87" high—one shelf; 90" & 93" high—two shelves; 96" high—three shelves
- No center rail on tall door for Argonne, Avery, Barnet, Camby, Cornell, Chanlott, Courtney, Evana, Evana Cathedral, Ferguson, Garrison, Halden, Harrington, Jamison, Jovana, Judson, Kendrick, Layden, Lockeford, Maxton, Parker House, Rutherford, Shepparton, Sheridan, Sydney, Tennyson, Vanderbilt door styles or doors with glass inserts
- Factory installed Roll-out Trays (ROT) are ***not*** available on Utility Cabinets wider than 24"
- Toe kick is shipped separately on 93" & 96" high cabinets

☆ When Inverted Frame (IF) is chosen in arched door styles, U18, U24, U24BUTT and U36, cabinets will have arched doors. All other cabinet sizes will be supplied with square doors

☆ Toe Kick Drawer (TKD), Wide Bottom Rail (WR) and Recessed Toe Kick (RTK) ***not*** available on 93" & 96" high cabinets

☆ Void Toe Kick (VTK) is ***not*** available on 93" and 96" high cabinets

☆ Maximum Increased Depth (ID) is 27"

☆ Operational End (OE) is ***not*** available with Increased Depth (ID) or Reduced Depth (RD) options

☆ Glass on top and bottom - select glass designs only

- ***Note:*** Shelf Kit (SK) for lower section ***must*** be ordered separately; see Shelving section of this book

●	PE
●	APC
●	APFC
●	FPEB
●	MI
●	DE
●	OE
●	AD_E
☆	CW
☆	RD
☆	ID
●	CH
☆	IF
☆	WR
●	XS
☆	GD
☆	RTK
☆	VTK
☆	TKD

Remember to order a 3/16" skin (WSK) for the exposed ends of 93" & 96" high cabinets to conceal the seam between the loose toe kick and the cabinet.

❄ Doors are square except full overlay arch door styles. Thermofoil door styles will always be square. Vanderbilt doors will have a solid, recessed flat panel

❍ Change Width (CW) option ***not*** available

▲ Glass door option ***not*** available

† Toe Kick Drawer (TKD) option ***not*** available

◆ 3" center stile

Note: *Remember to remove the white plastic "feet" from the bottom of all tall cabinets before installation. Their sole purpose is to protect the floor after the cabinets are unboxed. Leaving them on will result in uneven installation.*

Utility Extended Bottom 12" Deep

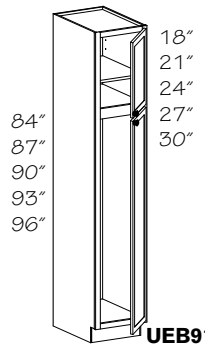

UEB912_-
UEB2412_

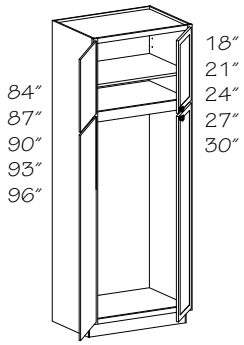

UEB2412_BUTT-
UEB3612_BUTT

Specify R or L
84" High
UEB121284 R or L
UEB151284 R or L
UEB181284 R or L
UEB211284 R or L
UEB241284 R or L
❍ UEB241284 BUTT
UEB271284 (Butt)
UEB301284 BUTT
UEB331284 BUTT
UEB361284 BUTT

87" High
UEB121287 R or L
UEB151287 R or L
UEB181287 R or L
UEB211287 R or L
UEB241287 R or L
❍ UEB241287 BUTT
UEB271287 (Butt)
UEB301287 BUTT
UEB331287 BUTT
UEB361287 BUTT

90" High
UEB121290 R or L
UEB151290 R or L
UEB181290 R or L
UEB211290 R or L
UEB241290 R or L
❍ UEB241290 BUTT
UEB271290 (Butt)
UEB301290 BUTT
UEB331290 BUTT
UEB361290 BUTT

Specify R or L
93" High
UEB121293 R or L
UEB151293 R or L
UEB181293 R or L
UEB211293 R or L
UEB241293 R or L
❍ UEB241293 BUTT
UEB271293 (Butt)
UEB301293 BUTT
UEB331293 BUTT
UEB361293 BUTT

96" High
UEB121296 R or L
UEB151296 R or L
UEB181296 R or L
UEB211296 R or L
UEB241296 R or L
❍ UEB241296 BUTT
UEB271296 (Butt)
UEB301296 BUTT
UEB331296 BUTT
UEB361296 BUTT

❍ Change Width (CW) option ***not*** available

Grey color coding indicates new product, size or code.

☆ Change Height (CH) modifications will be made in the upper section

- Includes adjustable shelves in upper section: 87" & 90" high-one shelf; 93" & 96" high-two shelves. (No shelf in upper section of 84" High)
- Deluxe Roll-out Trays available
- No center rail on tall door for Argonne, Avery, Barnet, Camby, Chanlott, Cornell, Courtney, Evana, Evana Cathedral, Ferguson, Garrison, Harrington, Jamison, Jovana, Judson, Kendrick, Layden, Lockeford, Maxton, Parker House, Rutherford, Shepparton, Sheridan, Sydney, Tennyson, Vanderbilt door styles or doors with glass inserts
- Toe kick is shipped separately on 93" & 96" high cabinets
- Wide Bottom Rail (WR) and Recessed Toe Kick (RTK) ***not*** available on 93" & 96" high cabinets
- Operational End (OE) is ***not*** available with Reduced Depth (RD) options
- ***Not*** available in Halden door styles
- ***Note:*** Shelf Kit (SK) for lower section ***must*** be ordered separately; see Shelving section of this book

●	PE
●	APC
●	APFC
●	FPEB
●	MI
●	DE
☆	OE
●	AD_E
☆	CW
●	RD
	ID
☆	CH
	IF
☆	WR
●	XS
●	GD
☆	RTK
	VTK
	TKD

Utility Extended Bottom 24" Deep

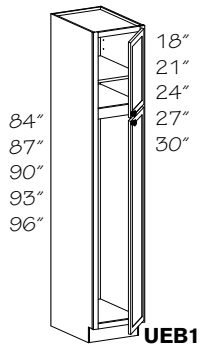

UEB1224_-
UEB2424_

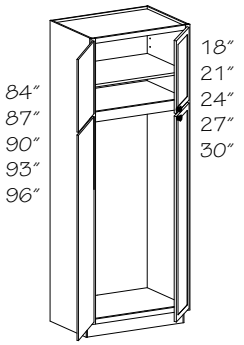

UEB2424_BUTT-
UEB3624_BUTT

Specify R or L
84" High
UEB122484 R or L
UEB152484 R or L
UEB182484 R or L
UEB212484 R or L
UEB242484 R or L
❍ UEB242484 BUTT
UEB272484 (Butt)
UEB302484 BUTT
UEB332484 BUTT
UEB362484 BUTT

87" High
UEB122487 R or L
UEB152487 R or L
UEB182487 R or L
UEB212487 R or L
UEB242487 R or L
❍ UEB242487 BUTT
UEB272487 (Butt)
UEB302487 BUTT
UEB332487 BUTT
UEB362487 BUTT

90" High
UEB122490 R or L
UEB152490 R or L
UEB182490 R or L
UEB212490 R or L
UEB242490 R or L
❍ UEB242490 BUTT
UEB272490 (Butt)
UEB302490 BUTT
UEB332490 BUTT
UEB362490 BUTT

Specify R or L
93" High
UEB122493 R or L
UEB152493 R or L
UEB182493 R or L
UEB212493 R or L
UEB242493 R or L
❍ UEB242493 BUTT
UEB272493 (Butt)
UEB302493 BUTT
UEB332493 BUTT
UEB362493 BUTT

96" High
UEB122496 R or L
UEB152496 R or L
UEB182496 R or L
UEB212496 R or L
UEB242496 R or L
❍ UEB242496 BUTT
UEB272496 (Butt)
UEB302496 BUTT
UEB332496 BUTT
UEB362496 BUTT

❍ Change Width (CW) option ***not*** available

Grey color coding indicates new product, size or code.

☆ Change Height (CH) modifications will be made in the upper section

- Includes adjustable shelves in upper section: 87" & 90" high-one shelf; 93" & 96" high-two shelves. (No shelf in upper section of 84" High)
- Deluxe Roll-out Trays available
- No center rail on tall door for Argonne, Avery, Barnet, Camby, Chanlott, Cornell, Courtney, Evana, Evana Cathedral, Ferguson, Garrison, Harrington, Jamison, Jovana, Judson, Kendrick, Layden, Lockeford, Maxton, Parker House, Rutherford, Shepparton, Sheridan, Sydney, Tennyson, Vanderbilt door styles or doors with glass inserts
- Toe kick is shipped separately on 93" & 96" high cabinets

☆ Toe Kick Drawer (TKD), Wide Bottom Rail (WR) and Recessed Toe Kick (RTK) ***not*** available on 93" & 96" high cabinets

- Maximum Increased Depth (ID) is 27"
- Operational End (OE) is ***not*** available with Increased Depth (ID) or Reduced Depth (RD) options
- ***Not*** available in Halden door styles
- ***Note:*** Shelf Kit (SK) for lower section ***must*** be ordered separately; see Shelving section of this book
- ***Note:*** for 24" Deep Cabinets: Factory Installed Roll-Out Trays (DXROT) are ***not*** available on Utility Cabinets wider than 24"

●	PE
●	APC
●	APFC
●	FPEB
●	MI
●	DE
☆	OE
●	AD_E
☆	CW
●	RD
☆	ID
☆	CH
	IF
☆	WR
●	XS
●	GD
☆	RTK
	VTK
☆	TKD

Note: *Remember to remove the white plastic "feet" from the bottom of all tall cabinets before installation. Their sole purpose is to protect the floor after the cabinets are unboxed. Leaving them on will result in uneven installation.*

Utility Cabinets 60 1/2" High 12" Deep

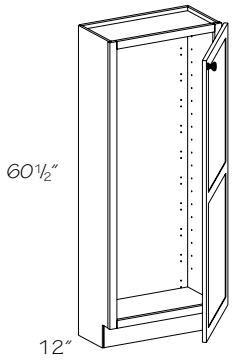

Specify R or L

Single Door	*Double Door*
❊❍ ▲**U91260 R or L**	❍ **U241260 BUTT**
U121260 R or L	**U271260 (Butt)**
U151260 R or L	◆ **U301260**
U181260 R or L	**U301260 BUTT**
U211260 R or L	◆ **U331260**
U241260 R or L	**U331260 BUTT**
	◆ **U361260**
	U361260 BUTT

❊ Vanderbilt doors will have a solid, recessed flat panel
❍ Change Width (CW) option ***not*** available
◆ 3" center stile
▲ Glass door option ***not*** available

- No shelf
- Shelf Kit (SK) ***must*** be ordered separately; see Shelving section of this book
- All door styles furnished square
- No center rail for Argonne, Courtney, Evana, Evana Cathedral, Lockeford, Parker House, Rutherford, Sheridan, Sydney door styles or doors with glass inserts

☆ Operational End (OE) is ***not*** available with Increased Depth (ID) or Reduced Depth (RD) options

●	PE
●	APC
●	APFC
●	FPEB
●	MI
●	DE
●	OE
●	AD_E
☆	CW
☆	RD
	ID
	CH
	IF
●	WR
●	XS
☆	GD
●	RTK
●	VTK
	TKD

Utility Cabinets 60 1/2" High 24" Deep

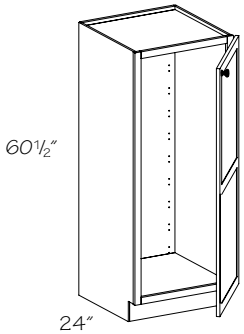

Specify R or L

Single Door	*Double Door*
❊❍† ▲**U92460 R or L**	❍ **U242460 BUTT**
U122460 R or L	**U272460 (Butt)**
U152460 R or L	◆ **U302460**
U182460 R or L	**U302460 BUTT**
U212460 R or L	◆ **U332460**
U242460 R or L	**U332460 BUTT**
	◆ **U362460**
	U362460 BUTT

❊ Vanderbilt doors will have a solid, recessed flat panel
❍ Change Width (CW) option ***not*** available
† Toe Kick Drawer (TKD) option ***not*** available
◆ 3" center stile
▲ Glass door option ***not*** available

- No shelf
- Shelf Kit (SK) ***must*** be ordered separately; see Shelving section of this book
- All door styles furnished square
- No center rail for Argonne, Courtney, Evana, Evana Cathedral, Lockeford, Parker House, Rutherford, Sheridan, Sydney door styles or doors with glass inserts
- Factory installed Roll-out Trays (ROT) are ***not*** available on Utility Cabinets wider than 24"

☆ Maximum Increased Depth (ID) is 27"
☆ Operational End (OE) is ***not*** available with Increased Depth (ID) or Reduced Depth (RD) options

Remember to attach a Mullion Strip Utility Bottom (MSUB) to tall cabinets 30" or wider when planning to field install roll-out trays. This will remove the center stile and replace it with a mullion strip on the left door.

●	PE
●	APC
●	APFC
●	FPEB
●	MI
●	DE
●	OE
●	AD_E
☆	CW
☆	RD
☆	ID
	CH
	IF
●	WR
●	XS
☆	GD
●	RTK
●	VTK
☆	TKD

New

Utility Cleaning Cabinet 24" Deep

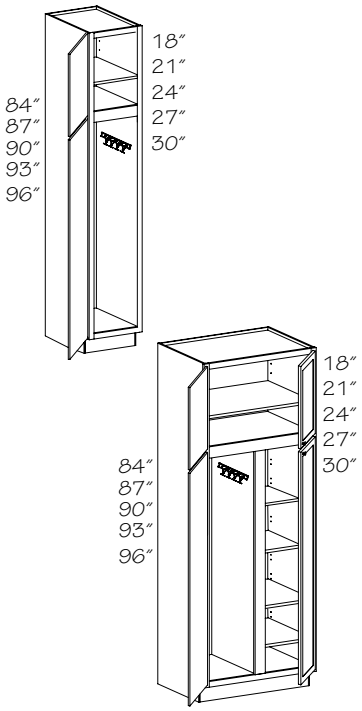

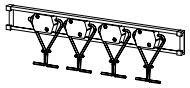

BMHK

84" High
Specify R or L

❊◆❍**UCC152484 R or L**
❊◆ **UCC182484 R or L**
❊◆ **UCC212484 R or L**
❍ **UCC242484 BUTT**
UCC302484 BUTT
UCC332484 BUTT
UCC362484 BUTT

87" High

❊◆❍**UCC152487 R or L**
❊◆ **UCC182487 R or L**
❊◆ **UCC212487 R or L**
❍ **UCC242487 BUTT**
UCC302487 BUTT
UCC332487 BUTT
UCC362487 BUTT

90" High

❊◆❍**UCC152490 R or L**
❊◆ **UCC182490 R or L**
❊◆ **UCC212490 R or L**
❍ **UCC242490 BUTT**
UCC302490 BUTT
UCC332490 BUTT
UCC362490 BUTT

93" High
Specify R or L

❊◆❍**UCC152493 R or L**
❊◆ **UCC182493 R or L**
❊◆ **UCC212493 R or L**
❍ **UCC242493 BUTT**
UCC302493 BUTT
UCC332493 BUTT
UCC362493 BUTT

96" High

❊◆❍**UCC152496 R or L**
❊◆ **UCC182496 R or L**
❊◆ **UCC212496 R or L**
❍ **UCC242496 BUTT**
UCC302496 BUTT
UCC332496 BUTT
UCC362496 BUTT

Broom Hook Replacement
BMHK

❊ Operational End (OE) available on the hinge side of the cabinet only
◆ Integrated Decorative End (DE) available on the hinge side of the cabinet only
❍ Change Width (CW) option ***not*** available

Grey color coding indicates new product, size or code.

☆ Change Height (CH) modifications will be made in the upper section
☆ Toe Kick Drawer (TKD), Void Toe Kick (VTK), Wide Bottom Rail (WR) and Recessed Toe Kick (RTK) ***not*** available on 93" & 96" high cabinets
- Single door cabinets: Broom hooks supplied on the end panel opposite the hinged side
- Double door cabinets: Broom hooks supplied on the center divider. Shelves right side, broom hooks left side
- Shelves shipped with cabinet
- Includes adjustable shelves in upper section: 87" & 90" high-one shelf; 93" & 96" high-two shelves. (No shelf in upper section of 84" High)
- Deluxe Rollout Trays available as field installed for double door cabinets (right side only) except for 33" wide unit
- No center rail on tall door for Argonne, Avery, Barnet, Camby, Chanlott, Cornell, Courtney, Evana, Evana Cathedral, Ferguson, Garrison, Harrington, Jamison, Jovana, Judson, Kendrick, Layden, Lockeford, Maxton, Parker House, Rutherford, Shepparton, Sheridan, Sydney, Tennyson, Vanderbilt door styles or doors with glass inserts
- Toe kick is shipped separately on 93" & 96" high cabinets

☆ Maximum Increased Depth (ID) is 27"
☆ Minimum Reduced Depth (RD) is 21"
☆ Operational End (OE) is ***not*** available with Increased Depth (ID) or Reduced Depth (RD) options
- Broom Hook (BHMK) also sold individually
- ***Not*** available in Halden door styles

●	PE
●	APC
●	APFC
●	FPEB
●	MI
☆	DE
☆	OE
●	AD_E
☆	CW
☆	RD
☆	ID
☆	CH
	IF
☆	WR
●	XS
●	GD
☆	RTK
☆	VTK
☆	TKD

Note: *Remember to remove the white plastic "feet" from the bottom of all tall cabinets before installation. Their sole purpose is to protect the floor after the cabinets are unboxed. Leaving them on will result in uneven installation.*

Utility Stack Cabinets 12" Deep

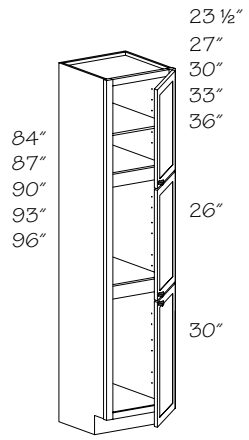

U9-U24

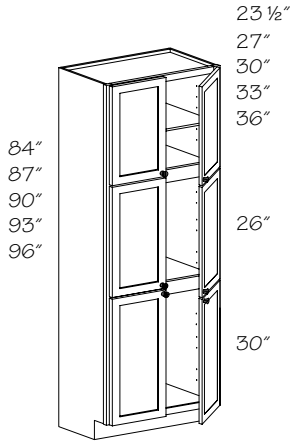

U24 BUTT-
U36 BUTT

Specify R or L *84" High*	*Specify R or L* *93" High*
❄❍✣ **UST91284 R or L**	❄❍✣ **UST91293 R or L**
UST121284 R or L	**UST121293 R or L**
UST151284 R or L	**UST151293 R or L**
UST181284 R or L	**UST181293 R or L**
UST211284 R or L	**UST211293 R or L**
UST241284 R or L	**UST241293 R or L**
❍ **UST241284 BUTT**	❍ **UST241293 BUTT**
UST271284 (Butt)	**UST271293 (Butt)**
UST301284 BUTT	**UST301293 BUTT**
UST331284 BUTT	**UST331293 BUTT**
UST361284 BUTT	**UST361293 BUTT**
87" High	*96" High*
❄❍✣ **UST91287 R or L**	❄❍✣ **UST91296 R or L**
UST121287 R or L	**UST121296 R or L**
UST151287 R or L	**UST151296 R or L**
UST181287 R or L	**UST181296 R or L**
UST211287 R or L	**UST211296 R or L**
UST241287 R or L	**UST241296 R or L**
❍ **UST241287 BUTT**	❍ **UST241296 BUTT**
UST271287 (Butt)	**UST271296 (Butt)**
UST301287 BUTT	**UST301296 BUTT**
UST331287 BUTT	**UST331296 BUTT**
UST361287 BUTT	**UST361296 BUTT**
90" High	
❄❍✣ **UST91290 R or L**	
UST121290 R or L	
UST151290 R or L	
UST181290 R or L	
UST211290 R or L	
UST241290 R or L	
❍ **UST241290 BUTT**	
UST271290 (Butt)	
UST301290 BUTT	
UST331290 BUTT	
UST361290 BUTT	

❄ Doors are square except full overlay arch door styles. Thermofoil door styles will always be square. Vanderbilt doors will have a solid, recessed flat panel

❍ Change Width (CW) option ***not*** available

✣ Glass door option ***not*** available

- Includes adjustable shelves in upper section: 84" & 87" high—one shelf; 90" & 93" high—two shelves; 96" high—three shelves
- Factory installed Roll-out Trays (ROT) are ***not*** available on Utility Cabinets wider than 24"
- Toe kick is shipped separately on 93" & 96" high cabinets

☆ Wide Bottom Rail (WR) and Recessed Toe Kick (RTK) ***not*** available on 93" & 96" high cabinets

☆ Void Toe Kick (VTK) is ***not*** available on 93" and 96" high cabinets

☆ Change Height (CH) modifications will be made in the upper section

☆ Operational End (OE) is ***not*** available with Reduced Depth (RD) options

☆ Glass doors available for top doors only

☆ To get glass on center and bottom door, order appropriate replacement door with glass option

- ***Note:*** Shelf Kits (SK) for center and bottom sections ***must*** be ordered separately; see Shelving section of this book

Remember to order a 3/16" skin (WSK) for the exposed ends of 93" & 96" high cabinets to conceal the seam between the loose toe kick and the cabinet.

●	PE
●	APC
●	APFC
●	FPEB
●	MI
●	DE
☆	OE
●	AD_E
☆	CW
●	RD
	ID
☆	CH
	IF
☆	WR
●	XS
☆	GD
☆	RTK
☆	VTK
	TKD

Note: *Remember to remove the white plastic "feet" from the bottom of all tall cabinets before installation. Their sole purpose is to protect the floor after the cabinets are unboxed. Leaving them on will result in uneven installation.*

Utility Stack Cabinets 24" Deep

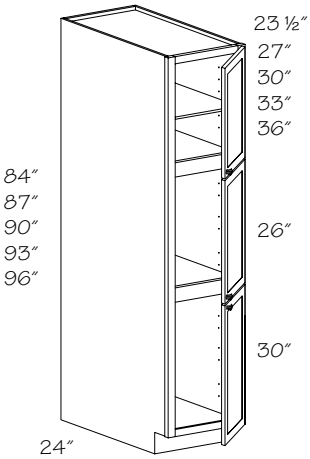

U9-24

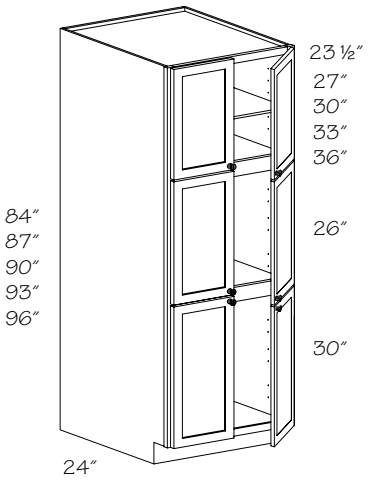

U24-36

Specify R or L
84" High

❄❍▲†**UST92484 R or L**
UST122484 R or L
UST152484 R or L
UST182484 R or L
UST212484 R or L
UST242484 R or L
❍ **UST242484 BUTT**
UST272484 (Butt)
UST302484 BUTT
UST332484 BUTT
UST362484 BUTT

87" High

❄❍▲†**UST92487 R or L**
UST122487 R or L
UST152487 R or L
UST182487 R or L
UST212487 R or L
UST242487 R or L
❍ **UST242487 BUTT**
UST272487 (Butt)
UST302487 BUTT
UST332487 BUTT
UST362487 BUTT

90" High

❄❍▲†**UST92490 R or L**
UST122490 R or L
UST152490 R or L
UST182490 R or L
UST212490 R or L
UST242490 R or L
❍ **UST242490 BUTT**
UST272490 (Butt)
UST302490 BUTT
UST332490 BUTT
UST362490 BUTT

Specify R or L
93" High

❄❍▲ **UST92493 R or L**
UST122493 R or L
UST152493 R or L
UST182493 R or L
UST212493 R or L
UST242493 R or L
❍ **UST242493 BUTT**
UST272493 (Butt)
UST302493 BUTT
UST332493 BUTT
UST362493 BUTT

96" High

❄❍▲ **UST92496 R or L**
UST122496 R or L
UST152496 R or L
UST182496 R or L
UST212496 R or L
UST242496 R or L
❍ **UST242496 BUTT**
UST272496 (Butt)
UST302496 BUTT
UST332496 BUTT
UST362496 BUTT

- Includes adjustable shelves in upper section: 84" & 87" high—one shelf; 90" & 93" high—two shelves; 96" high—three shelves
- Factory installed Roll-out Trays (ROT) are ***not*** available on Utility Cabinets wider than 24"
- Toe kick is shipped separately on 93" & 96" high cabinets

☆ Toe Kick Drawer (TKD), Wide Bottom Rail (WR) and Recessed Toe Kick (RTK) ***not*** available on 93" & 96" high cabinets

☆ Void Toe Kick (VTK) is ***not*** available on 93" and 96" high cabinets

☆ Change Height (CH) modifications will be made in the upper section

☆ Maximum Increased Depth (ID) is 27"

☆ Operational End (OE) is ***not*** available with Reduced Depth (RD) options

☆ Glass doors available for top doors only

- To get glass on center and bottom door, order appropriate replacement door with glass option
- ***Note:*** Shelf Kits (SK) for center and bottom sections ***must*** be ordered separately; see Shelving section of this book

Remember to order a 3/16" skin (WSK) for the exposed ends of 93" & 96" high cabinets to conceal the seam between the loose toe kick and the cabinet.

❄ Doors are square except full overlay arch door styles. Thermofoil door styles will always be square. Vanderbilt doors will have a solid, recessed flat panel

❍ Change Width (CW) option ***not*** available

▲ Glass door option ***not*** available

† Toe Kick Drawer (TKD) option ***not*** available

●	PE
●	APC
●	APFC
●	FPEB
●	MI
●	DE
☆	OE
●	AD_E
☆	CW
●	RD
☆	ID
☆	CH
	IF
☆	WR
●	XS
☆	GD
☆	RTK
☆	VTK
☆	TKD

Utility Stack Cabinets 60 1/2" High 12" Deep

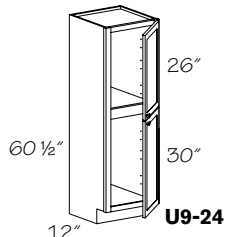

U9-24

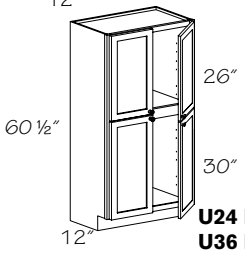

U24 BUTT-
U36 BUTT

Specify R or L
Single Door

❄❍▲ **UST91260 R or L**
UST121260 R or L
UST151260 R or L
UST181260 R or L
UST211260 R or L
UST241260 R or L

Double Door

❍ **UST241260 BUTT**
UST271260 (Butt)
UST301260 BUTT
UST331260 BUTT
UST361260 BUTT

- No shelf
- All door styles furnished square
- Factory installed Roll-out Trays (ROT) are ***not*** available on Utility Cabinets wider than 24"

☆ Operational End (OE) is ***not*** available with Increased Depth (ID) or Reduced Depth (RD) options

☆ Glass doors available for top doors only

- ***Note:*** Shelf Kits (SK) for center and bottom sections ***must*** be ordered separately; see Shelving section of this book

❄ Vanderbilt doors will have a solid, recessed flat panel

❍ Change Width (CW) option ***not*** available

▲ Glass door option ***not*** available

●	PE
●	APC
●	APFC
●	FPEB
●	MI
●	DE
●	OE
●	AD_E
☆	CW
☆	RD
	ID
	CH
	IF
●	WR
●	XS
☆	GD
●	RTK
●	VTK
	TKD

Note: Remember to remove the white plastic "feet" from the bottom of all tall cabinets before installation. Their sole purpose is to protect the floor after the cabinets are unboxed. Leaving them on will result in uneven installation.

Utility Stack Cabinets 60 1/2" High 24" Deep

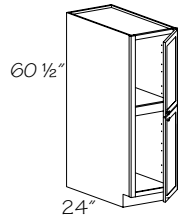

U9-24

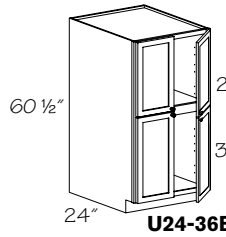

U24-36BUTT

Specify R or L

Single Door	*Double Door*
❇❍† ▲ **UST92460 R or L**	❍ **UST242460 BUTT**
UST122460 R or L	**UST272460 (Butt)**
UST152460 R or L	**UST302460 BUTT**
UST182460 R or L	**UST332460 BUTT**
UST212460 R or L	**UST362460 BUTT**
UST242460 R or L	

❇ Vanderbilt doors will have a solid, recessed flat panel
❍ Change Width (CW) option ***not*** available
▲ Glass door option ***not*** available
† Toe Kick Drawer (TKD) option ***not*** available

- No shelf
- All door styles furnished square
- Factory installed Roll-out Trays (ROT) are ***not*** available on Utility Cabinets wider than 24"
- ☆ Maximum Increased Depth (ID) is 27"
- ☆ Operational End (OE) is ***not*** available with Increased Depth (ID) or Reduced Depth (RD) options
- ☆ Glass doors available for top doors only
- ***Note:*** Shelf Kits (SK) for center and bottom sections ***must*** be ordered separately; see Shelving section of this book

Remember to attach a Mullion Strip Utility Bottom (MSUB) to tall cabinets 30" or wider when planning to field install roll-out trays. This will remove the center stile and replace it with a mullion strip on the left door.

●	PE
●	APC
●	APFC
●	FPEB
●	MI
●	DE
●	OE
●	AD_E
☆	CW
☆	RD
☆	ID
	CH
	IF
●	WR
●	XS
☆	GD
●	RTK
●	VTK
☆	TKD

Utility Combination–Shelves Left

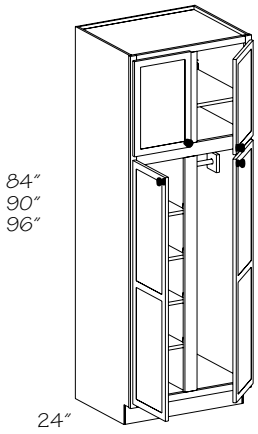

84" High
❇ **UC242484 BUTT•SL**
UC302484 •SL
UC362484 •SL
90" High
❇ **UC242490 BUTT•SL**
UC302490 •SL
UC362490 •SL
96" High
❇ **UC242496 BUTT•SL**
UC302496 •SL
UC362496 •SL

❇ Roll-out Trays (ROT) are ***not*** available

- Four adjustable shelves and one closet rod included
- Includes adjustable shelves in upper section: 84" high—one shelf; 90" high—two shelves; 96" high—three shelves
- No center rail on tall door for Argonne, Avery, Barnet, Camby, Chanlott, Cornell, Courtney, Evana, Evana Cathedral, Ferguson, Garrison, Halden, Harrington, Jamison, Jovana, Judson, Kendrick, Layden, Lockeford, Maxton, Parker House, Rutherford, Shepparton, Sheridan, Sydney, Tennyson, Vanderbilt door styles or doors with glass inserts
- Toe kick is shipped separately on 96" high cabinets
- ☆ Toe Kick Drawer (TKD), Wide Bottom Rail (WR) and Recessed Toe Kick (RTK) ***not*** available 96" high cabinets
- ☆ VTK is ***not*** available on 96" H cabinets
- ☆ Maximum Increased Depth (ID) is 27"
- Change Height (CH) modifications will be made in the upper door section
- ☆ Glass on top and bottom - select glass designs only

●	PE
●	APC
●	APFC
●	FPEB
●	MI
	DE
	OE
●	AD_E
	CW
●	RD
☆	ID
●	CH
	IF
☆	WR
●	XS
☆	GD
☆	RTK
☆	VTK
☆	TKD

Utility Combination

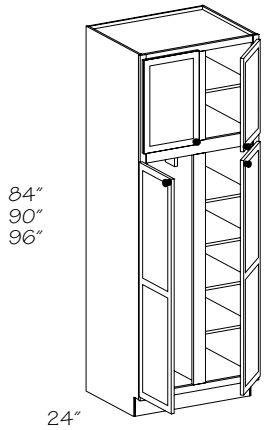

84" High
❇ **UC242484 BUTT**
UC302484
UC362484
90" High
❇ **UC242490 BUTT**
UC302490
UC362490
96" High
❇ **UC242496 BUTT**
UC302496
UC362496

❇ Roll-out Trays (ROT) are ***not*** available

- Four adjustable shelves and one closet rod included
- Includes adjustable shelves in upper section: 84" high—one shelf; 90" high—two shelves; 96" high—three shelves
- No center rail on tall door for Argonne, Avery, Barnet, Camby, Chanlott, Cornell, Courtney, Evana, Evana Cathedral, Ferguson, Garrison, Halden, Harrington, Jamison, Jovana, Judson, Kendrick, Layden, Lockeford, Maxton, Parker House, Rutherford, Shepparton, Sheridan, Sydney, Tennyson, Vanderbilt door styles or doors with glass inserts
- Toe kick is shipped separately on 96" high cabinets
- ☆ WR and RTK ***not*** available 96" high cabinets
- ☆ VTK is ***not*** available on 96" H cabinets
- ☆ Maximum Increased Depth (ID) is 27"
- Change Height (CH) modifications will be made in the upper door section
- ☆ Glass on top and bottom - select glass designs only

●	PE
●	APC
●	APFC
●	FPEB
●	MI
	DE
	OE
●	AD_E
	CW
●	RD
☆	ID
●	CH
	IF
☆	WR
●	XS
☆	GD
☆	RTK
☆	VTK
	TKD

Remember to order a 3/16" skin (WSK) for the exposed ends of 93" & 96" high cabinets to conceal the seam between the loose toe kick and the cabinet.

Note: *Remember to remove the white plastic "feet" from the bottom of all tall cabinets before installation. Their sole purpose is to protect the floor after the cabinets are unboxed. Leaving them on will result in uneven installation.*

Utility Deluxe Dovetailed Roll-out Tray

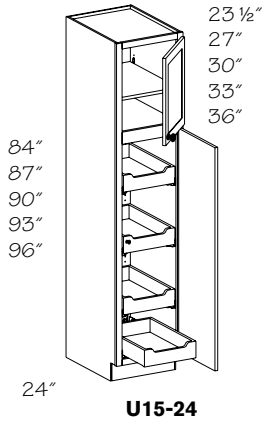

U15-24

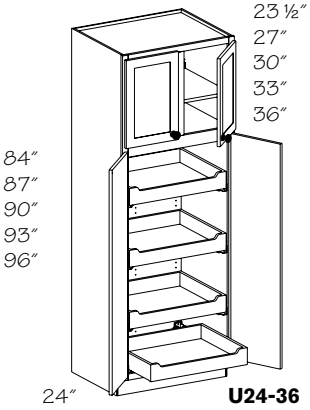

U24-36

Specify R or L
84" High

U152484 R or L▪4DXROT
U182484 R or L▪4DXROT
U212484 R or L▪4DXROT
U242484 R or L▪4DXROT
❍ **U242484 BUTT▪4DXROT**
U272484 (Butt)▪4DXROT
U302484 BUTT▪4DXROT
U332484 BUTT▪4DXROT
U362484 BUTT▪4DXROT

87" High

U152487 R or L▪4DXROT
U182487 R or L▪4DXROT
U212487 R or L▪4DXROT
U242487 R or L▪4DXROT
❍ **U242487 BUTT▪4DXROT**
U272487 (Butt)▪4DXROT
U302487 BUTT▪4DXROT
U332487 BUTT▪4DXROT
U362487 BUTT▪4DXROT

90" High

U152490 R or L▪4DXROT
U182490 R or L▪4DXROT
U212490 R or L▪4DXROT
U242490 R or L▪4DXROT
❍ **U242490 BUTT▪4DXROT**
U272490 (Butt)▪4DXROT
U302490 BUTT▪4DXROT
U332490 BUTT▪4DXROT
U362490 BUTT▪4DXROT

Specify R or L
93" High

U152493 R or L▪4DXROT
U182493 R or L▪4DXROT
U212493 R or L▪4DXROT
U242493 R or L▪4DXROT
❍ **U242493 BUTT▪4DXROT**
U272493 (Butt)▪4DXROT
U302493 BUTT▪4DXROT
U332493 BUTT▪4DXROT
U362493 BUTT▪4DXROT

96" High

U152496 R or L▪4DXROT
U182496 R or L▪4DXROT
U212496 R or L▪4DXROT
U242496 R or L▪4DXROT
❍ **U242496 BUTT▪4DXROT**
U272496 (Butt)▪4DXROT
U302496 BUTT▪4DXROT
U332496 BUTT▪4DXROT
U362496 BUTT▪4DXROT

❍ Change Width (CW) option ***not*** available

- Four adjustable Roll-out Trays (ROT) included in lower section
- Includes adjustable shelves in upper section: 84" & 87" high—one shelf; 90" & 93" high—two shelves; 96" high—three shelves
- No center rail on tall door for Argonne, Avery, Barnet, Camby, Chanlott, Cornell, Courtney, Evana, Evana Cathedral, Ferguson, Garrison, Halden, Harrington, Jamison, Jovana, Judson, Kendrick, Layden, Lockeford, Maxton, Parker House, Rutherford, Shepparton, Sheridan, Sydney, Tennyson, Vanderbilt door styles or doors with glass inserts
- Roll-out Trays (ROT) are 4" deep, 5/8" solid wood dovetailed sides with 3/16" plywood bottom, notched front and full extension runners with integrated buffer
- Roll-out Trays (ROT) shipped separately on 27"–36" wide units
- Toe kick is shipped separately on 93" & 96" high cabinets

☆ Reduced Depth (RD) available in 18" and 21" depths only
☆ Toe Kick Drawer (TKD), Wide Bottom Rail (WR) and Recessed Toe Kick (RTK) ***not*** available on 93" & 96" high cabinets
☆ 27"–36" wide units ***not*** available with Reduced Depth (RD)
☆ Void Toe Kick (VTK) is ***not*** available on 93" and 96" high cabinets
☆ Maximum Increased Depth (ID) is 27". Deluxe Roll-out Trays remain nominally 24" deep
☆ Glass on top and bottom - select glass designs only

Remember to order a 3/16" skin (WSK) for the exposed ends of 93" & 96" high cabinets to conceal the seam between the loose toe kick and the cabinet.

●	PE
●	APC
●	APFC
●	FPEB
●	MI
●	DE
	OE
●	AD_E
☆	CW
☆	RD
☆	ID
●	CH
	IF
☆	WR
●	XS
☆	GD
☆	RTK
☆	VTK
☆	TKD

Utility Stack 60 1/2" High Deluxe Dovetailed Roll-out Tray

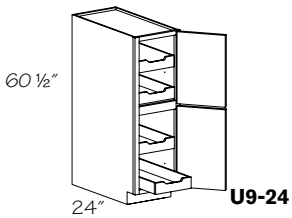

U9-24

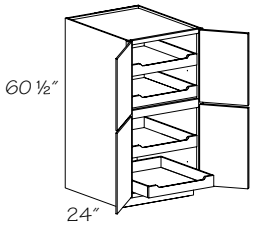

U24BUTT-36BUTT

Specify R or L

UST152460 R or L▪4DXROT
UST182460 R or L▪4DXROT
UST212460 R or L▪4DXROT
UST242460 R or L▪4DXROT
❍ **UST242460 BUTT▪4DXROT**
▲ **UST272460 (Butt)▪4DXROT**
▲ **UST302460 BUTT▪4DXROT**
▲ **UST332460 BUTT▪4DXROT**
▲ **UST362460 BUTT▪4DXROT**

❍ Change Width (CW) option ***not*** available
▲ Reduced Depth (RD) is ***not*** available

- Two Deluxe Roll-out Trays (DXROT) in bottom section and two Deluxe Roll-out Trays (DXROT) in the center section
- Deluxe Dovetailed Roll-out Trays (DXROT) are 4" deep, 5/8" solid wood dovetailed sides with 3/16" plywood bottom, notched front and full extension runners with integrated buffer
- Roll-out Trays (ROT) shipped separately on 27"–36" wide units

☆ Maximum Increased Depth (ID) is 27". Deluxe Roll-out Trays remain nominally 24" deep

●	PE
●	APC
●	APFC
●	FPEB
●	MI
●	DE
	OE
●	AD_E
☆	CW
☆	RD
☆	ID
	CH
	IF
●	WR
●	XS
	GD
●	RTK
●	VTK
●	TKD

Note: *Remember to remove the white plastic "feet" from the bottom of all tall cabinets before installation. Their sole purpose is to protect the floor after the cabinets are unboxed. Leaving them on will result in uneven installation.*

Utility Stack 84"-96" High Deluxe Dovetailed Roll-out Tray

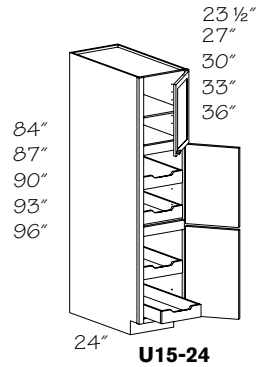

U15-24

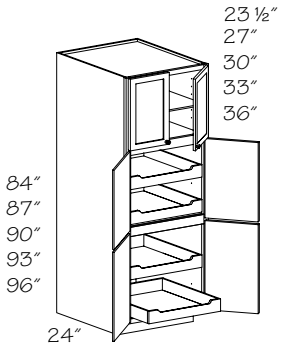

U24-36BUTT

Specify R or L

84" High

UST152484 R or L▪4DXROT
UST182484 R or L▪4DXROT
UST212484 R or L▪4DXROT
UST242484 R or L▪4DXROT
❍ **UST242484 BUTT▪4DXROT**
▲ **UST272484 (Butt)▪4DXROT**
▲ **UST302484 BUTT▪4DXROT**
▲ **UST332484 BUTT▪4DXROT**
▲ **UST362484 BUTT▪4DXROT**

87" High

UST152487 R or L▪4DXROT
UST182487 R or L▪4DXROT
UST212487 R or L▪4DXROT
UST242487 R or L▪4DXROT
❍ **UST242487 BUTT▪4DXROT**
▲ **UST272487 (Butt)▪4DXROT**
▲ **UST302487 BUTT▪4DXROT**
▲ **UST332487 BUTT▪4DXROT**
▲ **UST362487 BUTT▪4DXROT**

90" High

UST152490 R or L▪4DXROT
UST182490 R or L▪4DXROT
UST212490 R or L▪4DXROT
UST242490 R or L▪4DXROT
❍ **UST242490 BUTT▪4DXROT**
▲ **UST272490 (Butt)▪4DXROT**
▲ **UST302490 BUTT▪4DXROT**
▲ **UST332490 BUTT▪4DXROT**
▲ **UST362490 BUTT▪4DXROT**

393" High

UST152493 R or L▪4DXROT
UST182493 R or L▪4DXROT
UST212493 R or L▪4DXROT
UST242493 R or L▪4DXROT
❍ **UST242493 BUTT▪4DXROT**
▲ **UST272493 (Butt)▪4DXROT**
▲ **UST302493 BUTT▪4DXROT**
▲ **UST332493 BUTT▪4DXROT**
▲ **UST362493 BUTT▪4DXROT**

96" High

UST152496 R or L▪4DXROT
UST182496 R or L▪4DXROT
UST212496 R or L▪4DXROT
UST242496 R or L▪4DXROT
❍ **UST242496 BUTT▪4DXROT**
▲ **UST272496 (Butt)▪4DXROT**
▲ **UST302496 BUTT▪4DXROT**
▲ **UST332496 BUTT▪4DXROT**
▲ **UST362496 BUTT▪4DXROT**

❍ Change Width (CW) option ***not*** available
▲ Reduced Depth (RD) is ***not*** available

- Includes adjustable shelves in upper section: 84" & 87" high—one shelf; 90" & 93" high—two shelves; 96" high—three shelves
- Deluxe Dovetailed Roll-out Trays (DXROT) are 4" deep, 5/8" solid wood dovetailed sides with 3/16" plywood bottom, notched front and full extension runners with integrated buffer
- Two Deluxe Roll-out Trays (DXROT) in bottom section and two Deluxe Roll-out Trays (DXROT) in the center section
- Roll-out Trays (ROT) shipped separately on 27"–36" wide units
- Factory installed Roll-out Trays (ROT) will be installed in the bottom section up to the maximum number allowed, any remaining trays will be installed in the center section
- Factory installed Roll-out Trays (ROT) are ***not*** available on Utility Cabinets wider than 24"
- Toe kick is shipped separately on 93" & 96" high cabinets

☆ Change Height (CH) modifications will be made in the upper section
☆ Glass doors available for top section only
☆ Wide Bottom Rail (WR) and Recessed Toe Kick (RTK) ***not*** available on 93" & 96" high cabinets
☆ Toe Kick Drawer (TKD), Wide Bottom Rail (WR) and Recessed Toe Kick (RTK) ***not*** available on 93" & 96" high cabinets
☆ Maximum Increased Depth (ID) is 27". Deluxe Roll-out Trays remain nominally 24" deep

● PE
● APC
● APFC
● FPEB
● MI
● DE
OE
● AD_E
☆ CW
☆ RD
☆ ID
☆ CH
IF
☆ WR
● XS
☆ GD
☆ RTK
☆ VTK
☆ TKD

Remember to order a 3/16" skin (WSK) for the exposed ends of 93" & 96" high cabinets to conceal the seam between the loose toe kick and the cabinet.

Utility Message Center

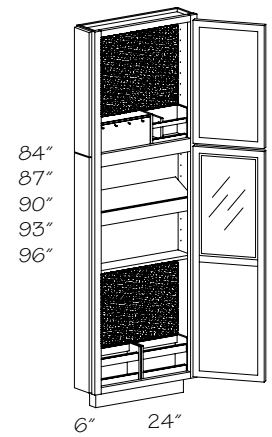

Specify R or L

MCU2484 R or L
MCU2487 R or L
MCU2490 R or L
MCU2493 R or L
MCU2496 R or L

- Top section features: Key hooks, cork board and organizer unit
- Bottom section features: Dry erase board, cork board, 2 magazine racks, 1 shelf, charging station (two - three-prong and two USB outlets)
- Requires separate power source in bottom section
- Charging station cord is 6 ft. long; power source ***must*** be within reach
- For use at the end of a cabinet run
- Back of cabinet is unfinished
- Two-piece Tall Filler Overlay (TFOL) supplied; shipped separately
- Toe kick is shipped separately on 93" & 96" high cabinets

☆ Void Toe Kick (VTK) is ***not*** available on 93" and 96" high cabinets

PE
APC
❖ APFC
FPEB
MI
DE
OE
AD_E
CW
RD
ID
CH
IF
☆ WR
XS
GD
❖ RTK
☆ VTK
TKD

Note: *Remember to remove the white plastic "feet" from the bottom of all tall cabinets before installation. Their sole purpose is to protect the floor after the cabinets are unboxed. Leaving them on will result in uneven installation.*

Pantry Storage

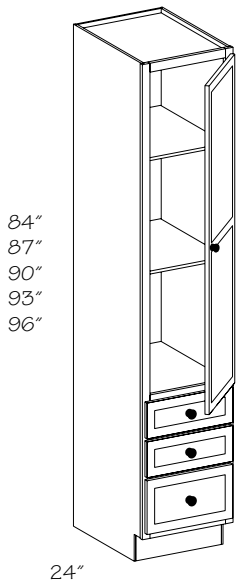

Specify R or L

84″ High

PS182484 R or L

PS242484 R or L

❍ **PS242484 BUTT**

87″ High

▲ **PS182487 R or L**

▲ **PS242487 R or L**

❍▲**PS242487 BUTT**

90″ High

PS182490 R or L

PS242490 R or L

❍ **PS242490 BUTT**

93″ High

▲ **PS182493 R or L**

▲ **PS242493 R or L**

❍▲**PS242493 BUTT**

96″ High

PS182496 R or L

PS242496 R or L

❍ **PS242496 BUTT**

❍ Change Width (CW) option ***not*** available

▲ ***Not*** available in Halden door styles

- Includes two adjustable shelves in upper section
- Drawer Configuration:
  84″ high—Three drawers (two standard, one deep) bottom edge of upper door aligns with bottom edge of the top drawer of standard base cabinet
  87″ high—Three drawers (on standard, two deep). Drawers will ***not*** align with other base cabinets
  90″ & 93″ high—Four drawers (three standard, one deep) top drawer aligns with top drawer of standard base cabinet
  96″ high—Five drawers (four standard, one deep) top drawer sets above countertop
- No center rail on tall door for Argonne, Avery, Barnet, Camby, Chanlott, Cornell, Courtney, Evana, Evana Cathedral, Ferguson, Garrison, Harrington, Jamison, Jovana, Judson, Kendrick, Layden, Lockeford, Maxton, Parker House, Rutherford, Shepparton, Sheridan, Sydney, Tennyson, Vanderbilt door styles or doors with glass inserts
- Factory installed Roll-out Trays (ROT) are ***not*** available
- Toe kick is shipped separately on 93″ & 96″ high cabinets
- ☆ Toe Kick Drawer (TKD), Wide Bottom Rail (WR) and Recessed Toe Kick (RTK) ***not*** available on 93″ & 96″ high cabinets
- ☆ Void Toe Kick (VTK) is ***not*** available on 93″ and 96″ high cabinets
- ☆ Maximum Increased Depth (ID) is 27″

Remember to order a 3/16″ skin (WSK) for the exposed ends of 93″ & 96″ high cabinets to conceal the seam between the loose toe kick and the cabinet.

●	PE
●	APC
●	APFC
●	FPEB
●	MI
●	DE
	OE
●	AD_E
☆	CW
●	RD
☆	ID
	CH
	IF
☆	WR
●	XS
	GD
☆	RTK
☆	VTK
☆	TKD

Multi Storage Pantry 24″ Wide

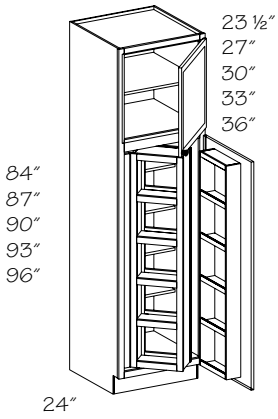

Specify R or L

MSP242484 R or L

MSP242487 R or L

MSP242490 R or L

† **MSP242493 R or L**

† **MSP242496 R or L**

† Toe Kick Drawer (TKD) option ***not*** available

Caution! Cabinetry or other obstacles ***cannot*** protrude past the face frame on the non-hinged side of the cabinet. ***Not*** following this rule may result in improper function of the swing out unit

- Four 10 7/16″ deep adjustable shelves in lower section
- One 4″ deep door storage rack with five adjustable shelves
- One 6 1/2″ deep double-sided swing-out storage rack with five adjustable shelves
- Includes adjustable shelves in upper section: 84″ & 87″ high—one shelf; 90″ & 93″ high—two shelves; 96″ high—three shelves
- No center rail on tall door for Argonne, Avery, Barnet, Camby, Chanlott, Cornell, Courtney, Evana, Evana Cathedral, Ferguson, Garrison, Halden, Harrington, Jamison, Jovana, Judson, Kendrick, Layden, Lockeford, Maxton, Parker House, Rutherford, Shepparton, Sheridan, Sydney, Tennyson, Vanderbilt door styles or doors with glass inserts
- Toe kick is shipped separately on 93″ & 96″ high cabinets
- ☆ Toe Kick Drawer (TKD), Wide Bottom Rail (WR) and Recessed Toe Kick (RTK) ***not*** available on 93″ & 96″ high cabinets
- ☆ Glass doors available for top doors only
- ☆ Void Toe Kick (VTK) is ***not*** available on 93″ and 96″ high cabinets
- ***Note:*** Swing-out shelves operate within a 90° door opening

●	PE
●	APC
●	APFC
●	FPEB
●	MI
	DE
	OE
	AD_E
	CW
	RD
	ID
●	CH
	IF
☆	WR
●	XS
☆	GD
☆	RTK
☆	VTK
☆	TKD

Multi Storage Pantry 36″ Wide

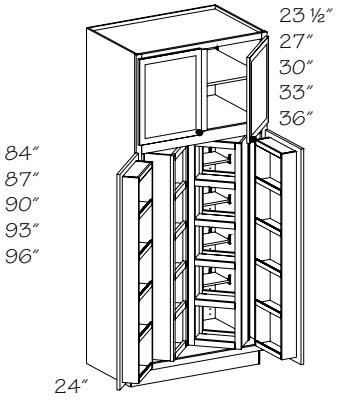

MSP362484

MSP362487

MSP362490

MSP362493

MSP362496

- Eight 7 1/8″ deep adjustable shelves in lower section; four on each side of center partition
- Two 4″ deep storage racks with five adjustable shelves
- Two 6 1/2″ deep double-sided swing-out storage racks with five adjustable shelves
- Includes adjustable shelves in upper section: 84″ & 87″ high—one shelf; 90″ & 93″ high—two shelves; 96″ high—three shelves
- No center rail on tall door for Argonne, Avery, Barnet, Camby, Chanlott, Cornell, Courtney, Evana, Evana Cathedral, Ferguson, Garrison, Halden, Harrington, Jamison, Jovana, Judson, Kendrick, Layden, Lockeford, Maxton, Parker House, Rutherford, Shepparton, Sheridan, Sydney, Tennyson, Vanderbilt door styles or doors with glass inserts
- Toe kick is shipped separately on 93″ & 96″ high cabinets
- ☆ Wide Bottom Rail (WR) and Recessed Toe Kick (RTK) ***not*** available on 93″ & 96″ high cabinets
- ☆ Glass doors available for top doors only
- ☆ Void Toe Kick (VTK) is ***not*** available on 93″ and 96″ high cabinets
- ***Note:*** Swing-out shelves operate within a 90° door opening

●	PE
●	APC
●	APFC
●	FPEB
●	MI
	DE
	OE
	AD_E
	CW
	RD
	ID
●	CH
	IF
☆	WR
●	XS
☆	GD
☆	RTK
☆	VTK
	TKD

Note: *Remember to remove the white plastic "feet" from the bottom of all tall cabinets before installation. Their sole purpose is to protect the floor after the cabinets are unboxed. Leaving them on will result in uneven installation.*

Tall Pantry Pull-out

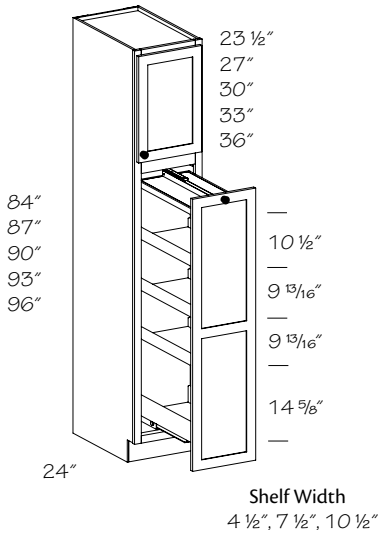

Specify R or L
84″ High

❊† **TPP92484 R or L**
TPP122484 R or L
TPP152484 R or L

87″ High

❊† **TPP92487 R or L**
TPP122487 R or L
TPP152487 R or L

90″ High

❊† **TPP92490 R or L**
TPP122490 R or L
TPP152490 R or L

93″ High

❊† **TPP92493 R or L**
TPP122493 R or L
TPP152493 R or L

96″ High

❊† **TPP92496 R or L**
TPP122496 R or L
TPP152496 R or L

❊ Doors are square except full overlay arch door styles. Thermofoil door styles will always be square. Vanderbilt doors will have a solid, recessed flat panel

† Toe Kick Drawer (TKD) option ***not*** available

- Two fixed shelves attached to center and bottom of bottom door
- Two adjustable shelves
- Pull-out shelves are 21 3/4″ deep
- Includes adjustable shelves in upper section: 84″ & 87″ high—one shelf; 90″ & 93″ high—two shelves; 96″ high—three shelves
- Unit slides on full extension side-mount runners
- Toe kick is shipped separately on 93″ & 96″ high cabinets
- ☆ WR ***not*** available on 93″ & 96″ high cabinets
- ☆ Toe Kick Drawer (TKD) and Void Toe Kick (VTK) option are ***not*** available on 93″ and 96″ high cabinets
- No center rail on tall door for Argonne, Avery, Barnet, Camby, Chanlott, Cornell, Courtney, Evana, Evana Cathedral, Ferguson, Garrison, Halden, Harrington, Jamison, Jovana, Judson, Kendrick, Layden, Lockeford, Maxton, Parker House, Rutherford, Shepparton, Sheridan, Sydney, Tennyson, Vanderbilt door styles or doors with glass inserts

●	PE
●	APC
●	APFC
●	FPEB
●	MI
●	DE
	OE
●	AD_E
	CW
	RD
	ID
●	CH
	IF
☆	WR
●	XS
	GD
	RTK
☆	VTK
☆	TKD



Remember to order a 3/16″ skin (WSK) for the exposed ends of 93″ & 96″ high cabinets to conceal the seam between the loose toe kick and the cabinet.

Tall Pantry Pull-out 60 1/2″ H

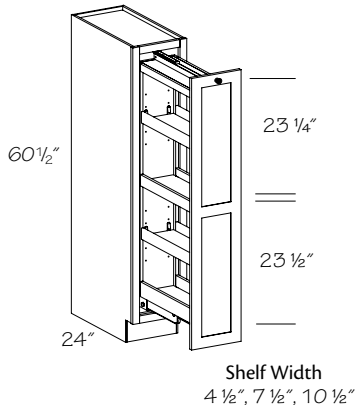

❊ **TPP92460**
TPP122460
TPP152460

❊ Vanderbilt doors will have a solid, recessed flat panel

- Two fixed shelves attached to center and bottom of door
- Two adjustable shelves
- Pull-out shelves are 21 3/4″ deep
- Unit slides on full extension side-mount runners
- All door styles furnished square
- No center rail for Argonne, Courtney, Evana, Evana Cathedral, Lockeford, Parker House, Rutherford, Sheridan, Sydney door styles or doors with glass inserts

●	PE
●	APC
●	APFC
●	FPEB
	MI
●	DE
	OE
●	AD_E
	CW
	RD
	ID
	CH
	IF
●	WR
●	XS
	GD
	RTK
●	VTK
	TKD

Note: *Remember to remove the white plastic "feet" from the bottom of all tall cabinets before installation. Their sole purpose is to protect the floor after the cabinets are unboxed. Leaving them on will result in uneven installation.*

Tall Corner Angle

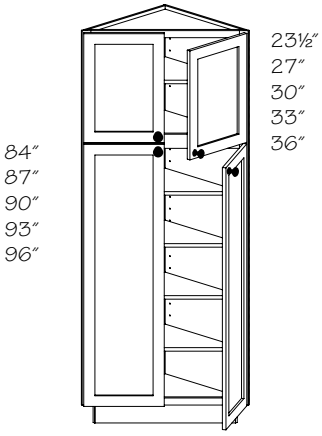

TCA242484 BUTT
TCA242487 BUTT
TCA242490 BUTT
TCA242493 BUTT
TCA242496 BUTT

- Includes adjustable shelves in upper section: 84″ & 87″ high—one shelf; 90″ & 93″ high—two shelves; 96″ high—three shelves
- Four adjustable bottom shelves; shipped separately
- No center rail on tall door for Argonne, Avery, Barnet, Camby, Chanlott, Cornell, Courtney, Evana, Evana Cathedral, Ferguson, Garrison, Halden, Harrington, Jamison, Jovana, Judson, Kendrick, Layden, Lockeford, Maxton, Parker House, Rutherford, Shepparton, Sheridan, Sydney, Tennyson, Vanderbilt door styles or doors with glass inserts
- Contrasting Back Options (CBEB, CPLB, CVGR) ***not*** available
- Can be installed on either right or left end
- Toe kick is shipped separately on 93″ & 96″ high cabinets
- Replacement shelf available; specify BCAS2424

☆ Void Toe Kick (VTK) is ***not*** available on 93" and 96" high cabinets

End panels are unfinished; cabinet is intended to be used with a Utility or Oven Cabinet. A panel ***must*** be used to cover the exposed side if installing without an adjacent tall cabinet.

●	PE
●	APC
	APFC
	FPEB
●	MI
	DE
	OE
	AD_E
	CW
	RD
	ID
●	CH
	IF
	WR
	XS
●	GD
	RTK
☆	VTK
	TKD

Tall Corner Angle Stack

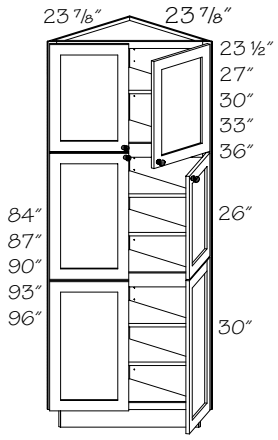

TCAST242484 BUTT
TCAST242487 BUTT
TCAST242490 BUTT
TCAST242493 BUTT
TCAST242496 BUTT

- Includes adjustable shelves in upper section: 84″ & 87″ high—one shelf; 90″ & 93″ high—two shelves; 96″ high—three shelves
- Four adjustable bottom shelves; shipped separately
- Contrasting Back Options (CBEB, CPLB, CVGR) ***not*** available
- Can be installed on either right or left end
- Toe kick is shipped separately on 93″ & 96″ high cabinets
- Replacement shelf available; specify BCAS2424

☆ Change Height (CH) modifications will be made in the upper section

☆ Glass doors available for top section only

☆ Void Toe Kick (VTK) is ***not*** available on 93" and 96" high cabinets

End panels are unfinished; cabinet is intended to be used with a Utility or Oven Cabinet. A panel ***must*** be used to cover the exposed side if installing without an adjacent tall cabinet.

●	PE
●	APC
	APFC
	FPEB
●	MI
	DE
	OE
	AD_E
	CW
	RD
	ID
☆	CH
	IF
	WR
	XS
☆	GD
	RTK
☆	VTK
	TKD

Note: *Remember to remove the white plastic "feet" from the bottom of all tall cabinets before installation. Their sole purpose is to protect the floor after the cabinets are unboxed. Leaving them on will result in uneven installation.*

Tall End Angle

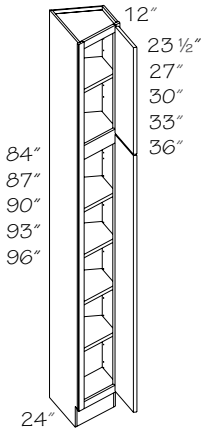

Specify R or L

TEA122484 R or L
TEA122487 R or L
TEA122490 R or L
TEA122493 R or L
TEA122496 R or L

- Includes adjustable shelves in upper section: 84" & 87" high—one shelf; 90" & 93" high—two shelves; 96" high—three shelves
- Four adjustable bottom shelves; shipped separately
- No center rail for Argonne, Courtney, Evana, Evana Cathedral, Lockeford, Parker House, Rutherford, Sheridan, Sydney door styles or doors with glass inserts
- Contrasting Back Options (CBEB, CPLB, CVGR) ***not*** available
- Toe kick is shipped separately on 93" & 96" high cabinets
- Replacement shelf available specify BEA12 R or L

☆ Integrated Decorative Ends available on 12" Deep side only

☆ Minimum Reduced Depth (RD) is 18"

☆ Wide Rail Plain only (WR)

☆ Recessed Toe Kick (RTK) available hinge side only

☆ Void Toe Kick (VTK) is ***not*** available on 93" and 96" high cabinets

- ***Note:*** 24 in. end panels are unfinished; cabinet is intended to be used with a Utility or Oven Cabinet. A panel ***must*** be used to cover the exposed side if installing without an adjacent tall cabinet. 12 in. deep end panels are finished
- ***Note:*** Full overlay door styles use a 1/2" overlay hinge

●	PE
●	APC
●	APFC
●	FPEB
●	MI
☆	DE
	OE
●	AD_E
	CW
☆	RD
	ID
●	CH
	IF
☆	WR
	XS
●	GD
☆	RTK
●	VTK
	TKD

Tall End Angle Stack

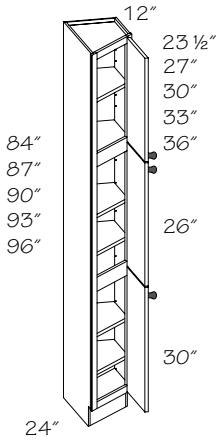

Specify R or L

TEAST122484 R or L
TEAST122487 R or L
TEAST122490 R or L
TEAST122493 R or L
TEAST122496 R or L

- Includes adjustable shelves in upper section: 84" & 87" high—one shelf; 90" & 93" high—two shelves; 96" high—three shelves
- Four adjustable bottom shelves; shipped separately
- Contrasting Back Options (CBEB, CPLB, CVGR) ***not*** available
- Toe kick is shipped separately on 93" & 96" high cabinets
- Replacement shelf available specify BEA12 R or L

☆ Integrated Decorative Ends available on 12" Deep side only

☆ Minimum Reduced Depth (RD) is 18"

☆ Wide Rail Plain only (WR)

☆ Recessed Toe Kick (RTK) available hinge side only

☆ Glass doors available for top section only

☆ Change Height (CH) modifications will be made in the upper section

☆ Void Toe Kick (VTK) is ***not*** available on 93" and 96" high cabinets

- ***Note:*** 24 in. end panels are unfinished; cabinet is intended to be used with a Utility or Oven Cabinet. A panel ***must*** be used to cover the exposed side if installing without an adjacent tall cabinet. 12 in. deep end panels are finished
- ***Note:*** Full overlay door styles use a 1/2" overlay hinge

●	PE
●	APC
●	APFC
●	FPEB
●	MI
☆	DE
	OE
●	AD_E
	CW
☆	RD
	ID
☆	CH
	IF
☆	WR
	XS
☆	GD
☆	RTK
●	VTK
	TKD

Note: *Remember to remove the white plastic "feet" from the bottom of all tall cabinets before installation. Their sole purpose is to protect the floor after the cabinets are unboxed. Leaving them on will result in uneven installation.*

Tall Appliance Cabinets

OC	30	24	84
code	width	depth	height

Note: Standard tall cabinet box depth is 12" or 24" unless stated otherwise. Add door thickness with bumpers for total depth.

Material dimensions listed may vary slightly from actual dimensions of the product.

Specifications subject to change without notice.

Construction Options and Modifications

- ❖ Included as standard
- ● Available with an upcharge
- ☆ Available with exceptions
- (Blank) ***Not*** available

PE	Plywood Ends
APC	All Plywood Construction
APFC	All Plywood Furniture Construction
FPEB	Furniture Plywood Ends
MI	Matching Interior
AD_E	Attached Decorative End
CW	Change Width
RD	Reduced Depth
ID	Increased Depth
CH	Change Height
IF	Inverted Frame
WR	Wide Bottom Rail
XS	Extended Stile
GD	Glass Doors
RTK	Recessed Toe Kick
VTK	Void Toe Kick
TKD	Toe Kick Drawer

Oven Cabinet–Single w/3" Stiles

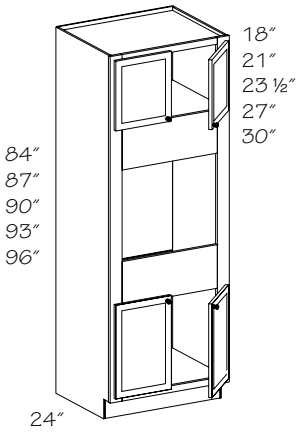

84" High

❄❍**OC242484 (Butt)S**
OC272484 (Butt)S
OC302484 (Butt)S
OC312484 (Butt)S
OC332484 BUTTS

87" High

❄❍**OC242487 (Butt)S**
OC272487 (Butt)S
OC302487 (Butt)S
OC312487 (Butt)S
OC332487 BUTTS

90" High

❄❍**OC242490 (Butt)S**
OC272490 (Butt)S
OC302490 (Butt)S
OC312490 (Butt)S
OC332490 BUTTS

93" High

❄❍**OC242493 (Butt)S**
OC272493 (Butt)S
OC302493 (Butt)S
OC312493 (Butt)S
OC332493 BUTTS

96" High

❄❍**OC242496 (Butt)S**
OC272496 (Butt)S
OC302496 (Butt)S
OC312496 (Butt)S
OC332496 BUTTS

❄ 1 1/2″ stiles
❍ Change Width (CW) option ***not*** available

●	PE
●	APC
●	APFC
●	FPEB
●	MI
●	AD_E
☆	CW
●	RD
☆	ID
☆	CH
	IF
☆	WR
●	XS
☆	GD
☆	RTK
☆	VTK
☆	TKD

- Includes adjustable shelves in upper section: 84" & 87" high—no shelves; 90" & 93" high—one shelf; 96" high—two shelves
- Factory installed Roll-out Trays (ROT) are ***not*** available, except OC 24
- Mullion strip oven cabinet (MSOTB) option is available on OC 33_S; see Construction Options section of this book
- Oven Trim Kit (overlay panel) available for a full overlay look; see Tall Accessories section of this book
- ☆ Change Height (CH) modifications will be made in the upper door section, appliance cutout dimensions are ***not*** affected
- ☆ Toe Kick Drawer (TKD), Wide Bottom Rail (WR) and Recessed Toe Kick (RTK) ***not*** available on 93" & 96" high cabinets
- ☆ Void Toe Kick (VTK) is ***not*** available on 93" and 96" high cabinets
- ☆ Glass on top and bottom - select glass designs only
- ***Not*** available with knife hinge door option
- Roll-out Trays (ROT) are ***not*** available for 31 1/2" wide cabinets
- ☆ Maximum Increased Depth (ID) is 27"
- ***Note:*** When ordering glass doors in full overlay door styles, a portion of the 3" face frame will be visible

Remember to order a 3/16" skin (WSK) for the exposed ends of 93" & 96" high cabinets to conceal the seam between the loose toe kick and the cabinet.

Cut out dimensions

Cabinet Width	Min. Width	Max. Width	Min. Height	Max. Height
24"	21"	22"	21"	33 13/16"
27"	21"	25"	21"	33 13/16"
30"	24"	28"	21"	33 13/16"
31 1/2"	25 1/2"	29 1/2"	21"	33 13/16"
33"	27"	31"	21"	33 13/16"

Note: *Remember to remove the white plastic "feet" from the bottom of all tall cabinets before installation. Their sole purpose is to protect the floor after the cabinets are unboxed. Leaving them on will result in uneven installation.*

Oven Cabinet–Single w/3" Stiles–Two Bottom Drawers

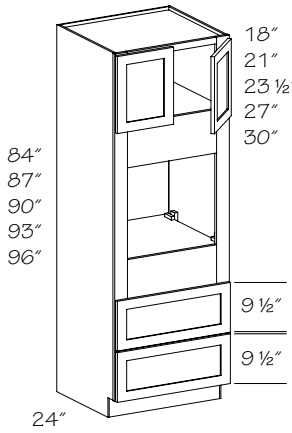

84" High

OC272484 (Butt)S•2D
OC302484 (Butt)S•2D
OC312484 (Butt)S•2D
OC332484 BUTTS•2D

87" High

OC272487 (Butt)S•2D
OC302487 (Butt)S•2D
OC312487 (Butt)S•2D
OC332487 BUTTS•2D

90" High

OC272490 (Butt)S•2D
OC302490 (Butt)S•2D
OC312490 (Butt)S•2D
OC332490 BUTTS•2D

93" High

OC272493 (Butt)S•2D
OC302493 (Butt)S•2D
OC312493 (Butt)S•2D
OC332493 BUTTS•2D

96" High

OC272496 (Butt)S•2D
OC302496 (Butt)S•2D
OC312496 (Butt)S•2D
OC332496 BUTTS•2D

Cut out dimensions

Cabinet Width	Min. Width	Max. Width	Min. Height	Max. Height
27"	21"	25"	21"	33 13/16"
30"	24"	28"	21"	33 13/16"
31 1/2"	25 1/2"	29 1/2"	21"	33 13/16"
33"	27"	31"	21"	33 13/16"

- Includes adjustable shelves in upper section: 84" high—no shelves; 87", 90" & 93" high—one shelf; 96" high—two shelves
- Oven Trim Kit (overlay panel) available for a full overlay look; see Tall Accessories section of this book
- ☆ Change Height (CH) modifications will be made in the upper door section, appliance cutout dimensions are ***not*** affected
- ☆ Toe Kick Drawer (TKD), Wide Bottom Rail (WR) and Recessed Toe Kick (RTK) ***not*** available on 93" & 96" high cabinets
- ☆ Void Toe Kick (VTK) is ***not*** available on 93" and 96" high cabinets
- ***Not*** available with knife hinge door option
- Roll-out Trays (ROT) are ***not*** available for 31 1/2" wide cabinets
- ☆ Maximum Increased Depth (ID) is 27"
- ☆ Glass doors available for top doors only
- ***Note:*** When ordering glass doors in full overlay door styles, a portion of the 3" face frame will be visible

● PE
● APC
● APFC
● FPEB
● MI
● AD_E
● CW
● RD
☆ ID
☆ CH
IF
☆ WR
● XS
☆ GD
☆ RTK
☆ VTK
☆ TKD

Remember to order a 3/16" skin (WSK) for the exposed ends of 93" & 96" high cabinets to conceal the seam between the loose toe kick and the cabinet.

Oven Cabinet–Single Oven/Microwave Combination w/3" Stiles–Bottom Drawer

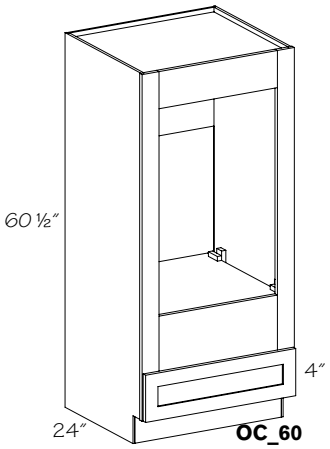

OC_60

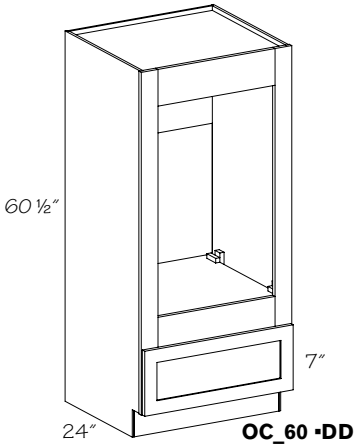

OC_60 •DD

4" High Drawers

OC272460 (Butt)
OC302460 (Butt)
OC312460 (Butt)
OC332460

7" High Drawers

OC272460 (Butt)•DD
OC302460 (Butt)•DD
OC312460 (Butt)•DD
OC332460 •DD

- No shelf
- Oven Trim Kit (overlay panel) available for a full overlay look; see Tall Accessories section of this book
- Double Oven Opening Kit (DOK) shelf available for two appliance installation; see Tall Accessories section of this book
- ☆ Change Height (CH) modifications will be made in the upper door section, appliance cutout dimensions are ***not*** affected
- ***Not*** available with knife hinge door option
- Roll-out Trays (ROT) are ***not*** available for 31 1/2" wide cabinets
- ☆ Maximum Increased Depth (ID) is 27"

● PE
● APC
● APFC
● FPEB
● MI
● AD_E
● CW
● RD
☆ ID
☆ CH
IF
● WR
● XS
GD
● RTK
● VTK
● TKD

Remember to order a 3/16" skin (WSK) for the exposed ends of 93" & 96" high cabinets to conceal the seam between the loose toe kick and the cabinet.

Cut out dimensions

			4" Bottom Drawer		7" Bottom Drawer	
Cabinet Width	Min. Width	Max. Width	Min. Height	Max. Height	Min. Height	Max. Height
27"	21"	25"	33 1/2"	44"	34 1/2"	41"
30"	24"	28"	33 1/2"	44"	34 1/2"	41"
31 1/2"	25 1/2"	29 1/2"	33 1/2"	44"	34 1/2"	41"
33"	27"	31"	33 1/2"	44"	34 1/2"	41"

Note: *Remember to remove the white plastic "feet" from the bottom of all tall cabinets before installation. Their sole purpose is to protect the floor after the cabinets are unboxed. Leaving them on will result in uneven installation.*

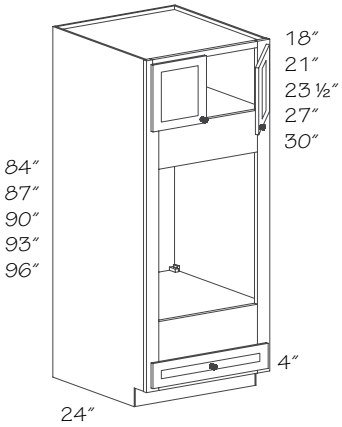

Oven Cabinet–Double w/3" Stiles

84" High

❄❍ **OC242484 (Butt)D**
OC272484 (Butt)D
OC302484 (Butt)D
OC312484 (Butt)D
OC332484 BUTTD

87" High

❄❍ **OC242487 (Butt)D**
OC272487 (Butt)D
OC302487 (Butt)D
OC312487 (Butt)D
OC332487 BUTTD

90" High

❄❍ **OC242490 (Butt)D**
OC272490 (Butt)D
OC302490 (Butt)D
OC312490 (Butt)D
OC332490 BUTTD

93" High

❄❍ **OC242493 (Butt)D**
OC272493 (Butt)D
OC302493 (Butt)D
OC312493 (Butt)D
OC332493 BUTTD

96" High

❄❍ **OC242496 (Butt)D**
OC272496 (Butt)D
OC302496 (Butt)D
OC312496 (Butt)D
OC332496 BUTTD

❄ 1 1/2″ stiles
❍ Change Width (CW) option ***not*** available

- Includes adjustable shelves in upper section: 84" & 87" high—no shelves; 90" & 93" high—one shelf; 96" high—two shelves
- Oven Trim Kit (overlay panel) available for a full overlay look; see Tall Accessories section of this book
- Double Oven Opening Kit (DOK) shelf available for two appliance installation; see Tall Accessories section of this book

☆ Change Height (CH) modifications will be made in the upper door section, appliance cutout dimensions are ***not*** affected

☆ Toe Kick Drawer (TKD), Wide Bottom Rail (WR) and Recessed Toe Kick (RTK) ***not*** available on 93" & 96" high cabinets

- Toe kick is shipped separately on 93″ & 96″ high cabinets

☆ Void Toe Kick (VTK) is ***not*** available on 93" and 96" high cabinets

- ***Not*** available with knife hinge door option
- Roll-out Trays (ROT) are ***not*** available for 31 1/2" wide cabinets

☆ Maximum Increased Depth (ID) is 27"

- ***Note:*** When ordering glass doors in full overlay door styles, a portion of the 3" face frame will be visible

●	PE
●	APC
●	APFC
●	FPEB
●	MI
●	AD_E
☆	CW
●	RD
☆	ID
☆	CH
	IF
☆	WR
●	XS
●	GD
☆	RTK
☆	VTK
☆	TKD

Cut out dimensions

Cabinet Width	Min. Width	Max. Width	Min. Height	Max. Height
24"	21"	22"	36 1/2"	50"
27"	21"	25"	36 1/2"	50"
30"	24"	28"	36 1/2"	50"
31 1/2"	25 1/2"	29 1/2"	36 1/2"	50"
33"	27"	31"	36 1/2"	50"

Note: *Remember to remove the white plastic "feet" from the bottom of all tall cabinets before installation. Their sole purpose is to protect the floor after the cabinets are unboxed. Leaving them on will result in uneven installation.*

Oven Cabinet–Double w/3" Stiles–Deep Drawer

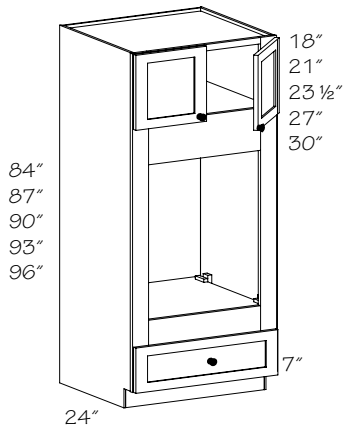

84" High

OC272484 (Butt)D▪DD
OC302484 (Butt)D▪DD
OC312484 (Butt)D▪DD
OC332484 BUTTD▪DD

87" High

OC272487 (Butt)D▪DD
OC302487 (Butt)D▪DD
OC312487 (Butt)D▪DD
OC332487 BUTTD▪DD

90" High

OC272490 (Butt)D▪DD
OC302490 (Butt)D▪DD
OC312490 (Butt)D▪DD
OC332490 BUTTD▪DD

93" High

OC272493 (Butt)D▪DD
OC302493 (Butt)D▪DD
OC312493 (Butt)D▪DD
OC332493 BUTTD▪DD

96" High

OC272496 (Butt)D▪DD
OC302496 (Butt)D▪DD
OC312496 (Butt)D▪DD
OC332496 BUTTD▪DD

- Includes adjustable shelves in upper section: 84" high—no shelves; 87", 90" & 93" high—one shelf; 96" high—two shelves
- Oven Trim Kit (overlay panel) available for a full overlay look; see Tall Accessories section of this book
- Double Oven Opening Kit (DOK) shelf available for two appliance installation; see Tall Accessories section of this book
- ☆ Change Height (CH) modifications will be made in the upper door section, appliance cutout dimensions are ***not*** affected
- ☆ Toe Kick Drawer (TKD), Wide Bottom Rail (WR) and Recessed Toe Kick (RTK) ***not*** available on 93" & 96" high cabinets
- ☆ Void Toe Kick (VTK) is ***not*** available on 93" and 96" high cabinets
- ***Not*** available with knife hinge door option
- Roll-out Trays (ROT) are ***not*** available for 31 1/2" wide cabinets
- ☆ Maximum Increased Depth (ID) is 27"
- ☆ Glass doors available for top doors only
- ***Note:*** When ordering glass doors in full overlay door styles, a portion of the 3" face frame will be visible

●	PE
●	APC
●	APFC
●	FPEB
●	MI
●	AD_E
●	CW
●	RD
☆	ID
☆	CH
	IF
☆	WR
●	XS
☆	GD
☆	RTK
☆	VTK
☆	TKD

Remember to order a 3/16" skin (WSK) for the exposed ends of 93" & 96" high cabinets to conceal the seam between the loose toe kick and the cabinet.

Cut out dimensions

Cabinet Width	Min. Width	Max. Width	Min. Height	Max. Height
27"	21"	25"	36 1/2"	47"
30"	24"	28"	36 1/2"	47"
31 1/2"	25 1/2"	29 1/2"	36 1/2"	47"
33"	27"	31"	36 1/2"	47"

Note: *Remember to remove the white plastic "feet" from the bottom of all tall cabinets before installation. Their sole purpose is to protect the floor after the cabinets are unboxed. Leaving them on will result in uneven installation.*

Oven Cabinet–Double Extended Opening w/3" Stiles

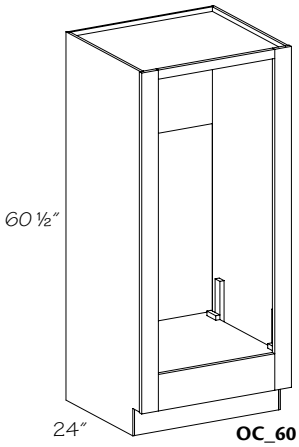

OC_60

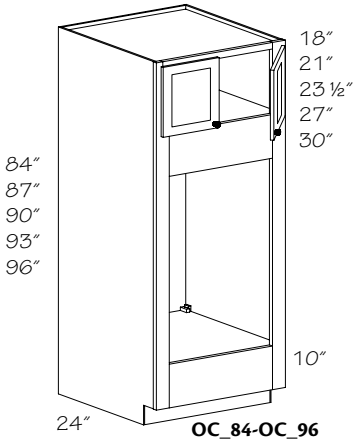

OC_84-OC_96

60 1/2" High

▲◆**OC272460 DE**
▲◆**OC302460 DE**
▲◆**OC312460 DE**
▲◆**OC332460 DE**

84" High

OC272484 (Butt)DE
OC302484 (Butt)DE
OC312484 (Butt)DE
OC332484 BUTTDE

87" High

OC272487 (Butt)DE
OC302487 (Butt)DE
OC312487 (Butt)DE
OC332487 BUTTDE

90" High

OC272490 (Butt)DE
OC302490 (Butt)DE
OC312490 (Butt)DE
OC332490 BUTTDE

93" High

OC272493 (Butt)DE
OC302493 (Butt)DE
OC312493 (Butt)DE
OC332493 BUTTDE

96" High

OC272496 (Butt)DE
OC302496 (Butt)DE
OC312496 (Butt)DE
OC332496 BUTTDE

▲ Change Top Rail (CTR) is ***not*** available
◆ Glass door option ***not*** available

- Includes adjustable shelves in upper section: 60", 84" & 87" high—no shelves; 90" & 93" high—one shelf; 96" high—two shelves
- Double Oven Opening Kit (DOK) shelf available for two appliance installation; see Tall Accessories section of this book
- Oven Trim Kit (overlay panel) available for a full overlay look; see Tall Accessories section of this book

☆ Change Height (CH) modifications will be made in the upper door section, appliance cutout dimensions are ***not*** affected

☆ Toe Kick Drawer (TKD), Wide Bottom Rail (WR) and Recessed Toe Kick (RTK) ***not*** available on 93" & 96" high cabinets

- Toe kick is shipped separately on 93" & 96" high cabinets

☆ Void Toe Kick (VTK) is ***not*** available on 93" and 96" high cabinets

- ***Not*** available with knife hinge door option
- Roll-out Trays (ROT) are ***not*** available for 31 1/2" wide cabinets

☆ Maximum Increased Depth (ID) is 27"

- ***Note:*** When ordering glass doors in full overlay door styles, a portion of the 3" face frame will be visible

Remember to order a 3/16" skin (WSK) for the exposed ends of 93" & 96" high cabinets to conceal the seam between the loose toe kick and the cabinet.

●	PE
●	APC
●	APFC
●	FPEB
●	MI
●	AD_E
●	CW
●	RD
☆	ID
☆	CH
	IF
☆	WR
●	XS
☆	GD
☆	RTK
☆	VTK
☆	TKD

Cut out dimensions

			60" H Cabinet		84"-87" H Cabinet		90"+ H Cabinet	
Cabinet Width	Min. Width	Max. Width	Min. Height	Max. Height	Min. Height	Max. Height	Min. Height	Max. Height
27"	21"	25"	48 1/2"	50 1/2"	43"	56 1/2"	43"	57"
30"	24"	28"	48 1/2"	50 1/2"	43"	56 1/2"	43"	57"
31 1/2"	25 1/2"	29 1/2"	48 1/2"	50 1/2"	43"	56 1/2"	43"	57"
33"	27"	31"	48 1/2"	50 1/2"	43"	56 1/2"	43"	57"
39"	33"	37"	48 1/2"	50 1/2"	43"	56 1/2"	43"	57"

Note: *Remember to remove the white plastic "feet" from the bottom of all tall cabinets before installation. Their sole purpose is to protect the floor after the cabinets are unboxed. Leaving them on will result in uneven installation.*

Oven Cabinet–Combination w/3" Stiles

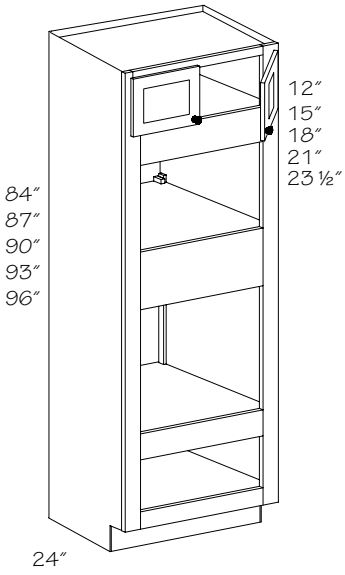

84" High

❒ **OC272484 (Butt)C**
❒ **OC302484 (Butt)C**
❒ **OC312484 (Butt)C**
❒ **OC332484 BUTTC**

87" High

OC272487 (Butt)C
OC302487 (Butt)C
OC312487 (Butt)C
OC332487 BUTTC

90" High

OC272490 (Butt)C
OC302490 (Butt)C
OC312490 (Butt)C
OC332490 BUTTC

93" High

OC272493 (Butt)C
OC302493 (Butt)C
OC312493 (Butt)C
OC332493 BUTTC

96" High

OC272496 (Butt)C
OC302496 (Butt)C
OC312496 (Butt)C
OC332496 BUTTC

❒ Change Height (CH) option ***not*** available

- Includes adjustable shelves in upper section: 84", 87" & 90" high—no shelves; 93" & 96" high—one shelf
- Back Options (BEB and VGRB) ***not*** available
- Contrasting Back Options (CBEB, CPLB, CVGR) ***not*** available
- Center 10" rail can be removed for double oven application
- ☆ Change Height (CH) modifications will be made in the upper door section, appliance cutout dimensions are ***not*** affected
- ☆ Toe Kick Drawer (TKD), Wide Bottom Rail (WR) and Recessed Toe Kick (RTK) ***not*** available on 93" & 96" high cabinets
- Toe kick is shipped separately on 93" & 96" high cabinets
- ☆ Void Toe Kick (VTK) is ***not*** available on 93" and 96" high cabinets
- ***Not*** available with knife hinge door option
- Roll-out Trays (ROT) are ***not*** available for 31 1/2" wide cabinets
- ☆ Maximum Increased Depth (ID) is 27"
- ***Note:*** When ordering glass doors in full overlay door styles, a portion of the 3" face frame will be visible

PE
● APC
● APFC
❖ FPEB
● MI
● AD_E
● CW
● RD
☆ ID
☆ CH
IF
☆ WR
● XS
● GD
☆ RTK
☆ VTK
☆ TKD

Cut out dimensions

			Top		Center		Bottom	
Cabinet Width	Min. Width	Max. Width	Min. Height	Max. Height	Min. Height	Max. Height	Min. Height	Max. Height
27"	21"	25"	15"	24 1/2"	21 1/2"	27 1/2"	9"	13 1/2"
30"	24"	28"	15"	24 1/2"	21 1/2"	27 1/2"	9"	13 1/2"
31 1/2"	25 1/2"	29 1/2"	15"	24 1/2"	21 1/2"	27 1/2"	9"	13 1/2"
33"	27"	31"	15"	24 1/2"	21 1/2"	27 1/2"	9"	13 1/2"

Best used for appliance combinations such as; microwave, single oven, and warming drawer or double oven and warming drawer

Remember to order a 3/16" skin (WSK) for the exposed ends of 93" & 96" high cabinets to conceal the seam between the loose toe kick and the cabinet.

Oven Cabinet-Combination w/Bottom Drawer

New

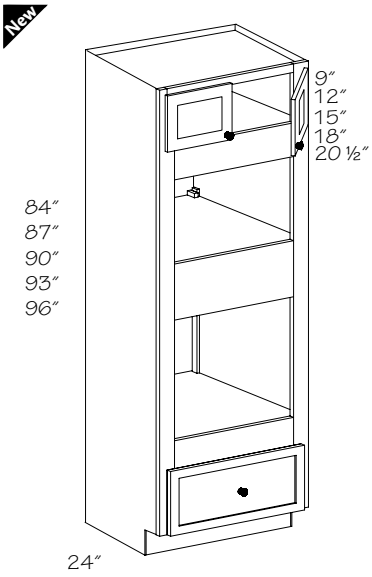

84" High

❒ **OC272484 (Butt)C•D**
❒ **OC302484 (Butt)C•D**
❒ **OC312484 (Butt)C•D**
❒ **OC332484 BUTTC•D**

87" High

OC272487 (Butt)C•D
OC302487 (Butt)C•D
OC312487 (Butt)C•D
OC332487 BUTTC•D

90" High

OC272490 (Butt)C•D
OC302490 (Butt)C•D
OC312490 (Butt)C•D
OC332490 BUTTC•D

93" High

OC272493 (Butt)C•D
OC302493 (Butt)C•D
OC312493 (Butt)C•D
OC332493 BUTTC•D

96" High

OC272496 (Butt)C•D
OC302496 (Butt)C•D
OC312496 (Butt)C•D
OC332496 BUTTC•D

❒ Change Height (CH) option ***not*** available

Grey color coding indicates new product, size or code.

- Includes adjustable shelves in upper section: 84", 87" & 90" high—no shelves; 93" & 96" high—one shelf
- Back Options (BEB and VGRB) ***not*** available
- Contrasting Back Options (CBEB, CPLB, CVGR) ***not*** available
- Drawer height is 7"
- Center 10" rail can be removed for double oven application
- ☆ Change Height (CH) modifications will be made in the upper door section, appliance cutout dimensions are ***not*** affected
- ☆ Toe Kick Drawer (TKD), Wide Bottom Rail (WR) and Recessed Toe Kick (RTK) ***not*** available on 93" & 96" high cabinets
- Toe kick is shipped separately on 93" & 96" high cabinets
- Void Toe Kick (VTK) is ***not*** available on 93" and 96" high cabinets
- ***Not*** available with knife hinge door option
- Roll-out Trays (ROT) are ***not*** available for 31 1/2" wide cabinets
- Maximum Increased Depth (ID) is 27"
- ***Note:*** When ordering glass doors in full overlay door styles, a portion of the 3" face frame will be visible

PE
● APC
● APFC
❖ FPEB
● MI
● AD_E
● CW
● RD
● ID
☆ CH
IF
☆ WR
● XS
GD
☆ RTK
☆ VTK
☆ TKD

Cut out dimensions

			Top	
Cabinet Width	Min. Width	Max. Width	Min. Height	Max. Height
27"	21"	25"	15"	24 1/2"
30"	24"	28"	15"	24 1/2"
31 1/2"	25 1/2"	29 1/2"	15"	24 1/2"
33"	27"	31"	15"	24 1/2"

Best used for appliance combinations such as; microwave and single oven.

Remember to order a 3/16" skin (WSK) for the exposed ends of 93" & 96" high cabinets to conceal the seam between the loose toe kick and the cabinet.

Note: *Remember to remove the white plastic "feet" from the bottom of all tall cabinets before installation. Their sole purpose is to protect the floor after the cabinets are unboxed. Leaving them on will result in uneven installation.*

Oven Cabinet–Universal

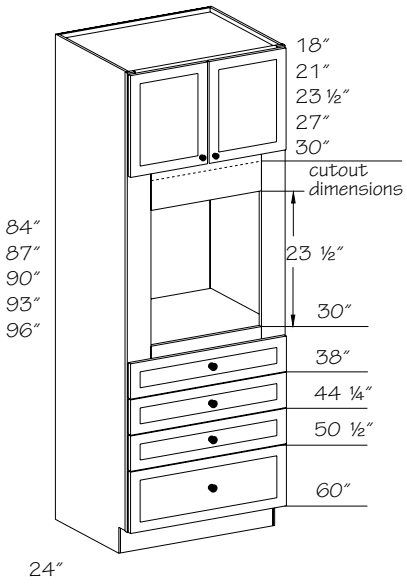

84" High
- ◆ **OC272484 (Butt)U**
- ▲ **OC302484 BUTTU**
- ▲ **OC332484 BUTTU**

87" High
- ◆ **OC272487 (Butt)U**
- ▲ **OC302487 BUTTU**
- ▲ **OC332487 BUTTU**

90" High
- ◆ **OC272490 (Butt)U**
- ▲ **OC302490 BUTTU**
- ▲ **OC332490 BUTTU**

93" High
- ◆ **OC272493 (Butt)U**
- ▲ **OC302493 BUTTU**
- ▲ **OC332493 BUTTU**

96" High
- ◆ **OC272496 (Butt)U**
- ▲ **OC302496 BUTTU**
- ▲ **OC332496 BUTTU**

◆ 3″ stiles
▲ 4 1/2″ stiles routed to 1 1/2″ in the door area

- Includes adjustable shelves in upper section: 84″ & 87″ high—no shelves; 90″ & 93″ high—one shelf; 96″ high—two shelves
- Adjustable floor
- Three standard height drawers
- Drawers are removable to accommodate increased oven height
- Oven Trim Kit (overlay panel) available for a full overlay look; see Tall Accessories section of this book
- ☆ Change Height (CH) modifications will be made in the upper door section, appliance cutout dimensions are ***not*** affected
- ☆ Toe Kick Drawer (TKD), Wide Bottom Rail (WR) and Recessed Toe Kick (RTK) ***not*** available on 93″ & 96″ high cabinets
- Toe kick is shipped separately on 93″ & 96″ high cabinets
- ☆ Void Toe Kick (VTK) is ***not*** available on 93″ and 96″ high cabinets
- One deep drawer
- Oven cutout requirements ***must*** be 1 1/2″ less than maximum allowable cutout in order to use Oven Trim Kit (OTK)
- ☆ Maximum Increased Depth (ID) is 27″

● PE
● APC
● APFC
● FPEB
● MI
● AD_E
● CW
● RD
☆ ID
☆ CH
IF
☆ WR
● XS
● GD
☆ RTK
☆ VTK
☆ TKD

Cut out dimensions

				1/2″ Overlay	Full Overlay
Cabinet Width	Min. Width	Max. Width	Min. Height	Max. Height	Max. Height
27″	21″	25″	23 ½″	31″	30″
30″	21″	28″	23 ½″	31″	30″
33″	24″	31″	23 ½″	31″	30″

Most major appliance manufacturers will tell you that their 27″ wide ovens will fit into a 27″ oven cabinet and their 30″ wide ovens will fit into a 30″ cabinet. In most cases this is true. However, the look this creates may ***not*** be appealing because the stiles will be concealed by the appliance. To solve this problem, you can order a 30″ oven cabinet for a 27″ oven and a 33″ oven cabinet for a 30″ oven, etc.

Microwave Cooking Center

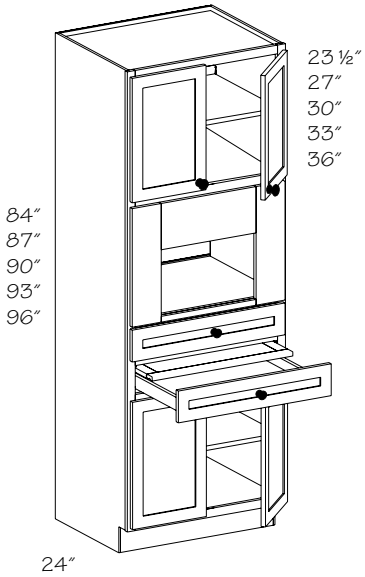

84" High
MCC272484 (Butt)
MCC302484 BUTT

87" High
MCC272487 (Butt)
MCC302487 BUTT

90" High
MCC272490 (Butt)
MCC302490 BUTT

93" High
MCC272493 (Butt)
MCC302493 BUTT

96" High
MCC272496 (Butt)
MCC302496 BUTT

- One adjustable shelf in lower section
- One standard drawer and one cutting center
- Includes adjustable shelves in upper section: 84″ & 87″ high—one shelf; 90″ & 93″ high—two shelves; 96″ high—three shelves
- Pull-out cutting board installed
- Top drawer will be slab, including DRPD, on all full-overlay door styles except LaSalle, Lyndale and Mandolay which will be five-piece
- ☆ Change Height (CH) modifications will be made in the upper door section, appliance cutout dimensions are ***not*** affected
- ☆ Toe Kick Drawer (TKD), Wide Bottom Rail (WR) and Recessed Toe Kick (RTK) ***not*** available on 93″ & 96″ high cabinets
- ☆ Void Toe Kick (VTK) is ***not*** available on 93″ and 96″ high cabinets
- ☆ Glass on top and bottom - select glass designs only
- Toe kick is shipped separately on 93″ & 96″ high cabinets

● PE
● APC
● APFC
● FPEB
● MI
● AD_E
CW
RD
ID
☆ CH
IF
☆ WR
● XS
☆ GD
☆ RTK
☆ VTK
☆ TKD

Remember to order a 3/16″ skin (WSK) for the exposed ends of 93″ & 96″ high cabinets to conceal the seam between the loose toe kick and the cabinet.

	1/2″ Overlay						Full Overlay					
	Cut out dimensions				Yoke sizes		Cut out dimensions				Yoke sizes	
Cabinet	Min. Width	Max. Width	Min. Height	Max. Height	Yoke Width	Yoke Height	Min. Width	Max. Width	Min. Height	Max. Height	Yoke Width	Yoke Height
MCC272484	14″	22″	11 ½″	17 ½″	25″	20 ½″	15 5/8″	23 5/8″	11 5/8″	18 1/8″	26 5/8″	21 1/8″
MCC272487/90/93/96	14″	22″	11″	17″	25″	20″	15 5/8″	23 5/8″	11 3/8″	17 7/8″	26 5/8″	20 7/8″
MCC302484	17″	25″	11 ½″	17 ½″	28″	20 ½″	18 5/8″	26 5/8″	11 5/8″	18 1/8″	29 5/8″	21 1/8″
MCC302487/90/93/96	17″	25″	11″	17″	28″	20″	18 5/8″	26 5/8″	11 3/8″	17 7/8″	29 5/8″	20 7/8″

Note: *Remember to remove the white plastic "feet" from the bottom of all tall cabinets before installation. Their sole purpose is to protect the floor after the cabinets are unboxed. Leaving them on will result in uneven installation.*

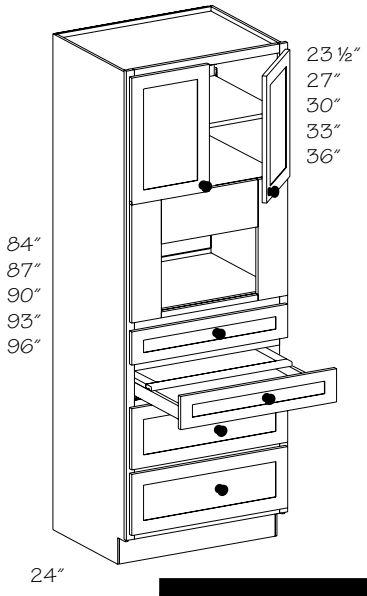

Microwave Cooking Center w/Drawer Storage

84" High

MCCD272484 (Butt)

MCCD302484 BUTT

87" High

MCCD272487 (Butt)

MCCD302487 BUTT

90" High

MCCD272490 (Butt)

MCCD302490 BUTT

93" High

MCCD272493 (Butt)

MCCD302493 BUTT

96" High

MCCD272496 (Butt)

MCCD302496 BUTT

- Two 7" deep drawers, one 2 1/4" drawer with Cutting Center (CC) above, and one standard 4" drawer
- Includes adjustable shelves in upper section: 84" & 87" high—one shelf; 90" & 93" high—two shelves; 96" high—three shelves
- ☆ Change Height (CH) modifications will be made in the upper door section, appliance cutout dimensions are ***not*** affected
- ☆ Toe Kick Drawer (TKD), Wide Bottom Rail (WR) and Recessed Toe Kick (RTK) ***not*** available on 93" & 96" high cabinets
- ☆ Void Toe Kick (VTK) is ***not*** available on 93" and 96" high cabinets
- Toe kick is shipped separately on 93" & 96" high cabinets

●	PE
●	APC
●	APFC
●	FPEB
●	MI
●	AD_E
	CW
	RD
	ID
☆	CH
	IF
☆	WR
●	XS
●	GD
☆	RTK
☆	VTK
☆	TKD

1/2" Overlay							Full Overlay					
	Cut out dimensions				Yoke sizes		Cut out dimensions				Yoke sizes	
Cabinet	Min. Width	Max. Width	Min. Height	Max. Height	Yoke Width	Yoke Height	Min. Width	Max. Width	Min. Height	Max. Height	Yoke Width	Yoke Height
MCCD272484	14″	22″	11 ½″	17 ½″	25″	18 ½″	15 5/8″	23 5/8″	11 5/8″	18 1/8″	26 5/8″	21 1/8″
MCCD272487/90/93/96	14″	22″	11″	17″	25″	18″	15 5/8″	23 5/8″	11 3/8″	17 7/8″	26 5/8″	20 7/8″
MCCD302484	17″	25″	11 ½″	17 ½″	28″	18 ½″	18 5/8″	26 5/8″	11 5/8″	18 1/8″	29 5/8″	21 1/8″
MCCD302487/90/93/96	17″	25″	11″	17″	28″	18″	18 5/8″	26 5/8″	11 3/8″	17 7/8″	29 5/8″	20 7/8″

Microwave Cooking Center–Extended Opening

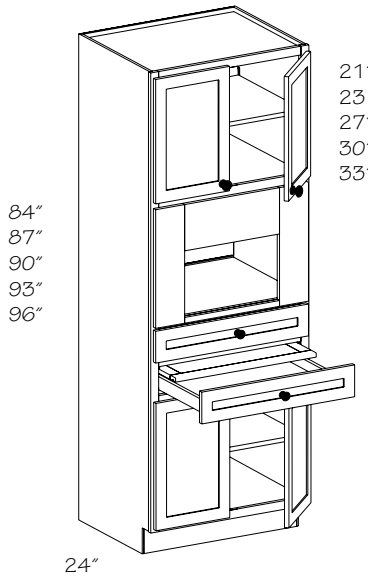

Opening Trimmable to: 22" x 21 1/2"

MCCE272484 (Butt)

MCCE272487 (Butt)

MCCE272490 (Butt)

MCCE272493 (Butt)

MCCE272496 (Butt)

Opening Trimmable to: 25" x 21 1/2"

MCCE302484 BUTT

MCCE302487 BUTT

MCCE302490 BUTT

MCCE302493 BUTT

MCCE302496 BUTT

- One adjustable shelf in lower section
- One standard drawer and one cutting center
- Includes adjustable shelves in upper section: 84" & 87" high—one shelf; 90" & 93" high—two shelves; 96" high—three shelves
- Pull-out cutting board installed
- Top drawer will be slab, including DRPD, on all full-overlay door styles except LaSalle, Lyndale and Mandolay which will be five-piece
- ☆ Toe Kick Drawer (TKD), Wide Bottom Rail (WR) and Recessed Toe Kick (RTK) ***not*** available on 93" & 96" high cabinets
- ☆ Change Height (CH) modifications will be made in the upper door section, appliance cutout dimensions are ***not*** affected
- ☆ Void Toe Kick (VTK) is ***not*** available on 93" and 96" high cabinets
- Toe kick is shipped separately on 93" & 96" high cabinets
- ☆ Glass on top and bottom - select glass designs only

●	PE
●	APC
●	APFC
●	FPEB
●	MI
●	AD_E
	CW
	RD
	ID
☆	CH
	IF
☆	WR
●	XS
☆	GD
☆	RTK
☆	VTK
☆	TKD



Remember to order a 3/16" skin (WSK) for the exposed ends of 93" & 96" high cabinets to conceal the seam between the loose toe kick and the cabinet.

1/2" Overlay							Full Overlay					
	Cut out dimensions				Yoke sizes		Cut out dimensions				Yoke sizes	
Cabinet	Min. Width	Max. Width	Min. Height	Max. Height	Yoke Width	Yoke Height	Min. Width	Max. Width	Min. Height	Max. Height	Yoke Width	Yoke Height
MCCE272484	18"	22"	15 1/16"	17"	25"	24"	19 5/8"	23 5/8"	15 1/16"	17"	26 5/8"	24"
MCCE272487	18"	22"	14 9/16"	16 1/2"	25"	23 1/2"	19 5/8"	23 5/8"	15 9/16"	17 1/2"	26 5/8"	24 1/2"
MCCE272490/93	18"	22"	14 9/16"	16 1/2"	25"	23 1/2"	19 5/8"	23 5/8"	15 1/16"	17"	26 5/8"	24"
MCCE272496	18"	22"	14 9/16"	16 1/2"	25"	23 1/2"	19 5/8"	23 5/8"	14 11/16"	16 5/8"	26 5/8"	23 5/8"
MCCE302484	21"	25"	15 1/16"	16 1/2"	28"	24"	22 5/8"	26 5/8"	15 1/16"	17"	29 5/8"	24"
MCCE302487	21"	25"	14 9/16"	17"	28"	23 1/2"	22 5/8"	26 5/8"	15 9/16"	17 1/2"	29 5/8"	24 1/2"
MCCE302490/93	21"	25"	14 9/16"	16 1/2"	28"	23 1/2"	22 5/8"	26 5/8"	15 1/16"	17"	29 5/8"	24"
MCCE302496	21"	25"	14 9/16"	16 1/2"	28"	23 1/2"	22 5/8"	26 5/8"	14 11/16"	16 5/8"	29 5/8"	23 5/8"

Note: *Remember to remove the white plastic "feet" from the bottom of all tall cabinets before installation. Their sole purpose is to protect the floor after the cabinets are unboxed. Leaving them on will result in uneven installation.*

Microwave Cooking Center w/Drawer Storage–Extended Opening

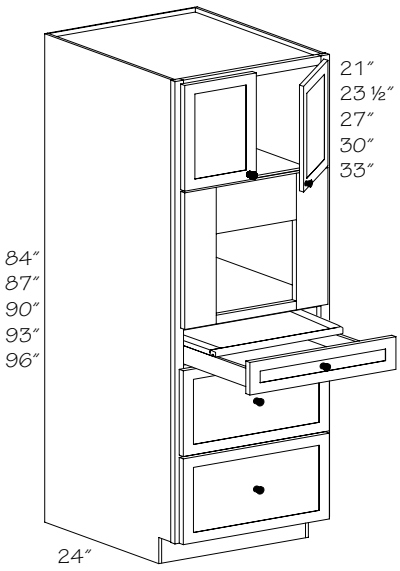

Opening Trimmable to: 22″ x 19 1/2″

MCCDE272484 (Butt)
MCCDE272487 (Butt)
MCCDE272490 (Butt)
MCCDE272493 (Butt)
MCCDE272496 (Butt)

Opening Trimmable to: 25″ x 19 1/2″

MCCDE302484 BUTT
MCCDE302487 BUTT
MCCDE302490 BUTT
MCCDE302493 BUTT
MCCDE302496 BUTT

- Two 7″ deep drawers, one 2 1/4″ drawer with Cutting Center (CC) above
- Includes adjustable shelves in upper section: 84″ & 87″ high—one shelf; 90″ & 93″ high—two shelves; 96″ high—three shelves
- ☆ Toe Kick Drawer (TKD), Wide Bottom Rail (WR) and Recessed Toe Kick (RTK) ***not*** available on 93″ & 96″ high cabinets
- ☆ Void Toe Kick (VTK) is ***not*** available on 93″ and 96″ high cabinets
- Toe kick is shipped separately on 93″ & 96″ high cabinets
- ☆ Change Height (CH) modifications will be made in the upper door section, appliance cutout dimensions are ***not*** affected

●	PE
●	APC
●	APFC
●	FPEB
●	MI
●	AD_E
	CW
	RD
	ID
☆	CH
	IF
☆	WR
●	XS
●	GD
☆	RTK
☆	VTK
☆	TKD

1/2″ Overlay							Full Overlay					
	Cut out dimensions				Yoke sizes		Cut out dimensions				Yoke sizes	
Cabinet	Min. Width	Max. Width	Min. Height	Max. Height	Yoke Width	Yoke Height	Min. Width	Max. Width	Min. Height	Max. Height	Yoke Width	Yoke Height
MCCDE272484	14″	22″	11″	17 1/2″	25″	20 1/2″	15 5/8″	23 5/8″	12 1/8″	19 3/8″	26 5/8″	21 5/8″
MCCDE272487/90/93/96	14″	22″	10 1/4″	16 3/4″	25″	19 3/4″	15 5/8″	23 5/8″	12 1/8″	18 7/8″	26 5/8″	21 5/8″
MCCDE302484	17″	25″	11″	17 1/2″	28″	20 1/2″	18 5/8″	26 5/8″	12 1/8″	19 3/8″	29 5/8″	21 5/8″
MCCDE302487/90/93/96	17″	25″	10 1/4″	16 3/4″	28″	19 3/4″	18 5/8″	26 5/8″	12 1/8″	18 7/8″	29 5/8″	21 5/8″

Note: *Remember to remove the white plastic "feet" from the bottom of all tall cabinets before installation. Their sole purpose is to protect the floor after the cabinets are unboxed. Leaving them on will result in uneven installation.*

Refrigerator Tall Cabinet

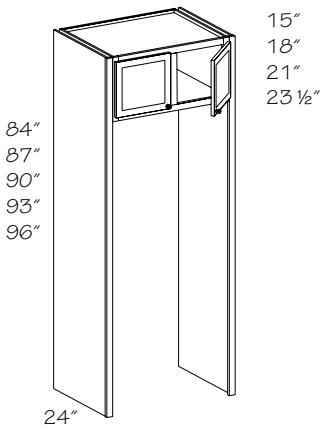

84" High	*Inside dimensions - W" x H"*
RTC332484	30" x 69"
RTC332484 BUTT	30" x 69"
RTC362484	33" x 69"
RTC362484 BUTT	33" x 69"
RTC392484	36" x 69"
RTC392484 BUTT	36" x 69"
87" High	
RTC332487	30" X 72"
RTC332487 BUTT	30" X 72"
RTC362487	33" X 72"
RTC362487 BUTT	33" X 72"
RTC392487	36" X 72"
RTC392487 BUTT	36" X 72"
90" High	
RTC332490	30" x 72"
RTC332490 BUTT	30" x 72"
RTC362490	33" x 72"
RTC362490 BUTT	33" x 72"
RTC392490	36" x 72"
RTC392490 BUTT	36" x 72"
93" High	
RTC332493	30" x 72"
RTC332493 BUTT	30" x 72"
RTC362493	33" x 72"
RTC362493 BUTT	33" x 72"
RTC392493	36" x 72"
RTC392493 BUTT	36" x 72"
96" High	
RTC332496	30" x 72"
RTC332496 BUTT	30" x 72"
RTC362496	33" x 72"
RTC362496 BUTT	33" x 72"
RTC392496	36" x 72"
RTC392496 BUTT	36" x 72"

- One adjustable shelf included in 96" high cabinets
- Interior of end panels are Natural Birch Viraguard
- ☆ Maximum Increased Depth (ID) is 27"
- Shipped in two packages

●	PE
●	APC
●	APFC
●	FPEB
☆	MI
	AD_E
	CW
●	RD
☆	ID
	CH
	IF
	WR
	XS
●	GD
	RTK
	VTK
	TKD

Fabric Care Ensemble

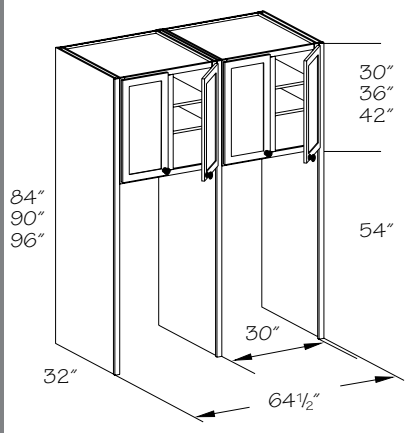

Two Shelves
84" High
FCE653284
Three Shelves
90" High
FCE653290
96" High
FCE653296

- All components shipped separately
- ***Not*** for use as a freestanding unit
- ***Not*** available with Mullion Strip Wall (MSW) or Mullion Strip Top (MSUT)

●	PE
●	APC
●	APFC
●	FPEB
●	MI
	AD_E
	CW
	RD
	ID
	CH
	IF
	WR
	XS
	GD
	RTK
	VTK
	TKD

Note: *Remember to remove the white plastic "feet" from the bottom of all tall cabinets before installation. Their sole purpose is to protect the floor after the cabinets are unboxed. Leaving them on will result in uneven installation.*

Fabric Care Ensemble Cabinet

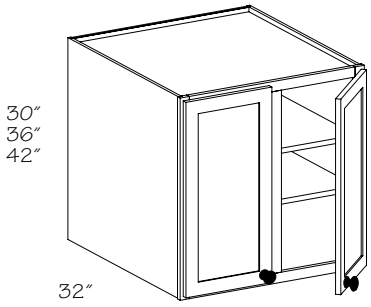

Two Shelves

FCEC303230 K 30″ High

Three Shelves

FCEC303236 K 36″ High

FCEC303242 K 42″ High

- Fabric Care Ensemble Cabinets (FCEC) are for the Fabric Care Ensemble ONLY
- ***Must*** be installed as part of the Fabric Care Ensemble for warranty coverage
- ***Not*** available with Mullion Strip Wall (MSW) or Mullion Strip Top (MSUT)

●	PE
●	APC
●	APFC
●	FPEB
●	MI
	AD_E
	CW
●	RD
	ID
	CH
	IF
	WR
	XS
●	GD
	RTK
	VTK
	TKD

Fabric Care Ensemble Panels

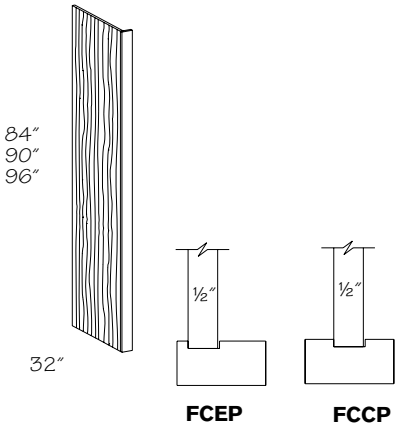

Center Panel

FCCP1 1/2•84 84″ High

FCCP1 1/2•90 90″ High

FCCP1 1/2•96 96″ High

End Panel

FCEP1 1/2•84 84″ High

FCEP1 1/2•90 90″ High

FCEP1 1/2•96 96″ High

- Viraguard panels
- Painted hardwood supplied for EverCore™

●	PE
●	APC
●	APFC
●	FPEB
❖	MI
	AD_E
	CW
●	RD
	ID
	CH
	IF
	WR
	XS
	GD
	RTK
	VTK
	TKD

Note: *Remember to remove the white plastic "feet" from the bottom of all tall cabinets before installation. Their sole purpose is to protect the floor after the cabinets are unboxed. Leaving them on will result in uneven installation.*

Tall Cabinet Accessories

RTFC	3	15	84
code	width	depth	height

Material dimensions listed may vary slightly from actual dimensions of the product.

Specifications subject to change without notice.

Construction Options and Modifications

- ❖ Included as standard
- ● Available with an upcharge
- ☆ Available with exceptions
- (Blank) ***Not*** available

PE	Plywood Ends
APC	All Plywood Construction
APFC	All Plywood Furniture Construction
FPEB	Furniture Plywood Ends
MI	Matching Interior
CW	Change Width
RD	Reduced Depth
ID	Increased Depth
CH	Change Height
WR	Wide Bottom Rail

Oven Trim Kit

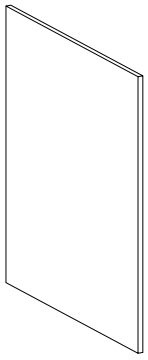

For OC_D	*Width x Height*
OTK24 D	23 5/8" x 53 1/8"
OTK27 D	26 5/8" x 53 1/8"
OTK30 D	29 5/8" x 53 1/8"
OTK31 D	30 1/8 x 53 1/8"
OTK33 D	32 5/8" x 53 1/8"
For OC_DE & OC_U	*Width x Height*
OTK24 DE	23 5/8" x 60 5/8"
OTK27 DE	26 5/8" x 60 5/8"
OTK30 DE	29 5/8" x 60 5/8"
OTK31 DE	30 1/8" x 60 5/8"
OTK33 DE	32 5/8" x 60 5/8"
For OC_S & OC_.2D	*Width x Height*
OTK24 S	23 5/8" x 32 5/8"
OTK27 S	26 5/8" x 32 5/8"
OTK30 S	29 5/8" x 32 5/8"
OTK31 S	30 1/8 x 32 5/8"
OTK33 S	32 5/8" x 32 5/8"
OTK39 S	38 5/8" x 32 5/8"
For OC_DD	*Width x Height*
OTK24 DD	23 5/8" x 50 1/8"
OTK27 DD	26 5/8" x 50 1/8"
OTK30 DD	29 5/8" x 50 1/8"
OTK31 DD	31 1/8" x 50 1/8"
OTK33 DD	32 5/8" x 50 1/8"

- 5/8" wood veneer construction except for Wood-Grain Foil door styles, which will have 3/4" wood veneer construction; not available in plywood
- Oven Trim Kits (OTK) will be supplied in plain-sawn material for Quartersawn door styles
- Painted hardwood supplied for EverCore™
- Wood-Grain Foil door styles default to vertical design slab
- Front and back sides are finished
- Edgebanded all four sides
- 3/4" Thick for Wood-Grain Foil
- 3/4" quartersawn panel supplied for Crafted Doors

PE
APC
APFC
FPEB
MI
CW
RD
ID
CH
WR

Double Oven Opening Kit

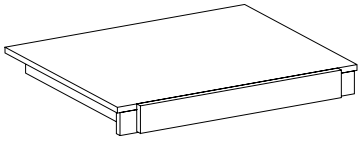

DOK24
DOK27
DOK30
DOK31
DOK33

- Includes 1/2" Viraguard clad shelf with 3/4" Pine mounting supports and 3" wide 3/4" solid wood center rail to match cabinet exterior
- For installing two appliances in one oven cabinet
- Painted hardwood supplied for EverCore™

PE
● APC
APFC
FPEB
MI
CW
RD
ID
CH
WR

Wood Tall Door Storage Kit

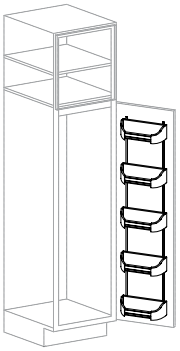

WTDSK15 for U1524 5 - 10 3/4" wide shelves
WTDSK18 for U1824 5 - 13 3/4" wide shelves
WTDSK24 for U2424 5 - 19 3/4" wide shelves

- Three 5/8" deep maple trays with chrome rails attached to 46" long metal ladders
- Tray location is adjustable
- Field installation on full overlay raised panel door styles and slab door styles only

PE
APC
APFC
FPEB
MI
CW
RD
ID
CH
WR

Tray Dividers–Tall

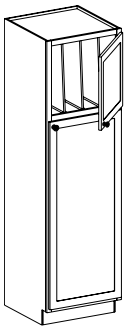

1TD
2TD
3TD
4TD
5TD
6TD

- 1/2" natural Birch Viraguard
- Available factory installed for 24" deep cabinets only
- Installed in wood or plastic U-channels
- Shelves are eliminated when this option is selected
- Specify quantity and location
- Tray Dividers (TD) are installed in the top section of Utility Stack (UST) cabinets
- Order Example: U242484-3TD (spaced evenly)

PE
APC
APFC
FPEB
MI
CW
RD
ID
CH
WR

Tall Filler

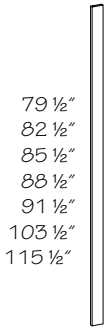

84" High
TF3•84
TF6•84
87" High
TF3•87
TF6•87
90" High
TF3•90
TF6•90
93" High
TF3•93
TF6•93
96" High
TF3•96
TF6•96
108" High
TF3•108
TF6•108
120" High
TF3•120
TF6•120

- 3/4" thick solid wood
- Finished one side only
- Painted hardwood supplied for EverCore™
- Painted or Stained hardwood supplied for Wood-Grain Foil door styles
- No toe kick

Remember to use fillers with full overlay door styles, especially square edge profiles, when cabinets will be against a return wall, box, pilaster or column. Use fillers on all overlays if there is case molding on a return wall. This will ensure proper clearance for drawers and roll-out tray access.

PE
APC
APFC
FPEB
MI
CW
RD
ID
CH
WR

Tall Filler Overlay

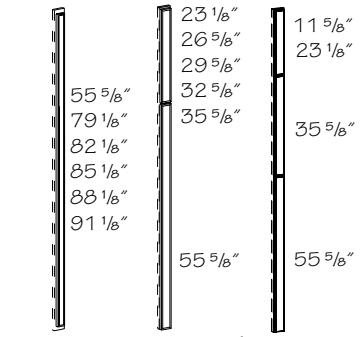

One-piece

TFOL3•60

TFOL6•60

Two-piece

TFOL3•84

TFOL6•84

TFOL3•87

TFOL6•87

TFOL3•90

TFOL6•90

TFOL3•93

TFOL6•93

TFOL3•96

TFOL6•96

Three-piece

TFOL3•108

TFOL6•108

TFOL3•120

TFOL6•120

Full Height

❄ **TFOL3•84•FH**

❄ **TFOL6•84•FH**

❄ **TFOL3•87•FH**

❄ **TFOL6•87•FH**

❄ **TFOL3•90•FH**

❄ **TFOL6•90•FH**

❄ **TFOL3•93•FH**

❄ **TFOL6•93•FH**

❄ **TFOL3•96•FH**

❄ **TFOL6•96•FH**

❄ ***Not*** available in Thermofoil or Wood-Grain Foil door styles; available in High-Gloss Foil door styles

- Available in full overlay door styles and select sizes available in 1/2" overlay
- Available in High-Gloss Foil finish except three-piece models
- Filler overlay has routed door profile and is made from the same material as doors and drawer fronts
- Filler ordered separately
- Thermofoils are painted hardwood

PE
APC
APFC
FPEB
MI
CW
RD
ID
CH
WR

Tall Fluted Filler

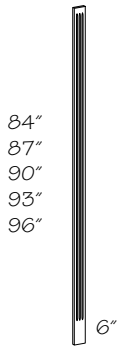

84" High

TFF3•84

TFF6•84

87" High

TFF3•87

TFF6•87

90" High

TFF3•90

TFF6•90

93" High

TFF3•93

TFF6•93

96" High

TFF3•96

TFF6•96

- 3/4" thick solid wood
- Painted hardwood supplied for EverCore™ and Thermofoil
- Painted or Stained hardwood supplied for Wood-Grain Foil door styles
- ***Not*** available in Morristown; Melrose and Putnam supplied plain sawn

PE
APC
APFC
FPEB
MI
CW
RD
ID
CH
WR

Plain Capital Tall Fluted Filler

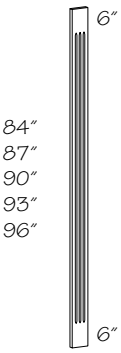

84" High

PCTFF3•84

PCTFF6•84

87" High

PCTFF3•87

PCTFF6•87

90" High

PCTFF3•90

PCTFF6•90

93" High

PCTFF3•93

PCTFF6•93

96" High

PCTFF3•96

PCTFF6•96

- 3/4" thick solid wood
- Painted hardwood supplied for EverCore™ and Thermofoil
- Painted or Stained hardwood supplied for Wood-Grain Foil door styles
- ***Not*** available in Morristown; Melrose and Putnam supplied plain sawn

PE
APC
APFC
FPEB
MI
CW
RD
ID
CH
WR

Rosette Tall Fluted Filler

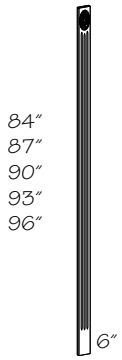

RTFF3•84
RTFF3•87
RTFF3•90
RTFF3•93
RTFF3•96

- 3/4" thick solid wood
- Applied decorative rosette
- Painted hardwood supplied for EverCore™ and Thermofoil
- ***Not*** available in Rustic Alder, High-Gloss Foil or Wood-Grain Foil door styles
- ***Not*** available in Morristown; Melrose and Putnam supplied plain sawn

PE
APC
APFC
FPEB
MI
CW
RD
ID
CH
WR

Rosette Tall Fluted Filler Overlay

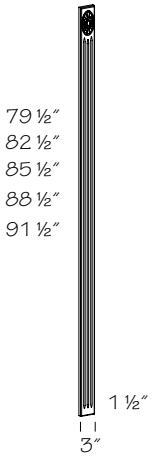

RFTFOL3•84
RFTFOL3•87
RFTFOL3•90
RFTFOL3•93
RFTFOL3•96

- 3/4" thick solid wood
- Applied decorative rosette
- Painted hardwood supplied for EverCore™ and Thermofoil
- ***Not*** available in Rustic Alder, High-Gloss Foil or Wood-Grain Foil door styles
- ***Not*** available in Morristown; Melrose and Putnam supplied plain sawn

PE
APC
APFC
FPEB
MI
CW
RD
ID
CH
WR

Tall Column

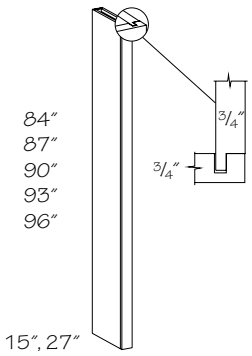

84″ High	*90″ High*	*96″ High*
❍ **TC31584**	❍ **TC31590**	❍ **TC31596**
TC61584	**TC61590**	**TC61596**
❍ **TC32784**	❍ **TC32790**	❍ **TC32796**
TC62784	**TC62790**	**TC62796**
87″ High	*93″ High*	
❍ **TC31587**	❍ **TC31593**	
TC61587	**TC61593**	
❍ **TC32787**	❍ **TC32793**	
TC62787	**TC62793**	

❍ Change Width (CW) option ***not*** available

- Front is 3/4″ solid wood
- Quartersawn Oak door styles have 3/4″ solid quartersawn wood front and quartersawn wood veneer end panels
- Painted hardwood supplied for EverCore™
- Plain sawn material supplied for Barnet Crafted door styles
- Foil-wrapped MDF supplied for Wood-Grain Foil door styles on face frame only
- Finished front and both sides
- Reversible, may be used on either right or left end

☆ APFC standard when APC option is selected

PE
● APC
☆ APFC
❖ FPEB
MI
☆ CW
● RD
ID
● CH
❖ WR

Tall Fluted Column

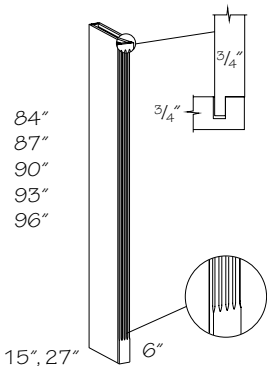

84″ High	*93″ High*
TFC31584	**TFC31593**
TFC32784	**TFC32793**
87″ High	*96″ High*
TFC31587	**TFC31596**
TFC32787	**TFC32796**
90″ High	
TFC31590	
TFC32790	

- Fluted front is 3/4″ solid wood; plain sawn wood supplied for quartersawn door styles
- Quartersawn Oak door styles have quartersawn wood veneer end panels
- Painted hardwood supplied for EverCore™
- Painted or Stained hardwood supplied for Wood-Grain Foil door styles
- Plain sawn material supplied for Barnet Crafted door styles
- Finished front and both sides
- Reversible, may be used on either right or left end
- ***Not*** available in Morristown

☆ APFC standard when APC option is selected

PE
● APC
☆ APFC
❖ FPEB
MI
CW
● RD
ID
● CH
❖ WR

Sterling Tall Column

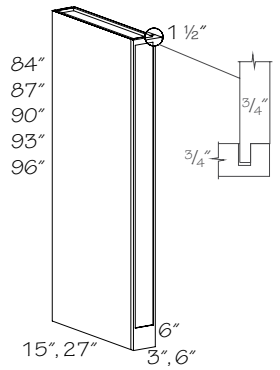

84″ High	90″ High	96″ High
STTC31584	**STTC31590**	**STTC31596**
STTC61584	**STTC61590**	**STTC61596**
STTC32784	**STTC32790**	**STTC32796**
STTC62784	**STTC62790**	**STTC62796**
87″ High	*93″ High*	
STTC31587	**STTC31593**	
STTC61587	**STTC61593**	
STTC32787	**STTC32793**	
STTC62787	**STTC62793**	

- Front is 3/4″ solid wood
- Available in Rustic Alder, Cherry, EverCore™, Maple and White Wood-Grain Foil door styles only
- Painted hardwood supplied for EverCore™
- Painted hardwood supplied for Wood-Grain Foil door styles; only available in white
- Finished front and both sides
- Reversible, may be used on either right or left end

☆ APFC standard when APC option is selected

	PE
●	APC
☆	APFC
❖	FPEB
	MI
	CW
●	RD
	ID
	CH
❖	WR

Plain Capital Tall Fluted Column

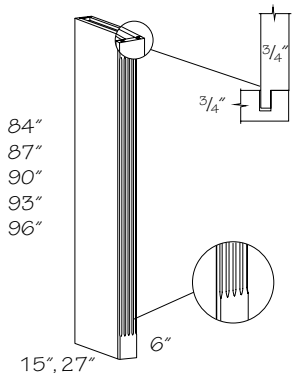

84″ High	93″ High
PCTFC31584	**PCTFC31593**
PCTFC32784	**PCTFC32793**
87″ High	*96″ High*
PCTFC31587	**PCTFC31596**
PCTFC32787	**PCTFC32796**
90″ High	
PCTFC31590	
PCTFC32790	

- Fluted front is 3/4″ solid wood; plain sawn wood supplied for quartersawn door styles
- Quartersawn Oak door styles have quartersawn wood veneer end panels
- Finished front and both sides
- Reversible, may be used on either right or left end
- Painted hardwood supplied for EverCore™
- Painted or Stained hardwood supplied for Wood-Grain Foil door styles
- Plain sawn material supplied for Barnet Crafted door styles
- ***Not*** available in Morristown

☆ APFC standard when APC option is selected

	PE
●	APC
☆	APFC
❖	FPEB
	MI
	CW
●	RD
	ID
●	CH
❖	WR

Rosette Tall Fluted Column

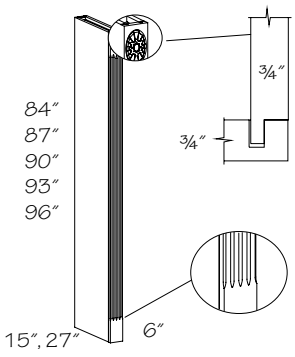

84″ High	93″ High
RTFC31584	**RTFC31593**
RTFC32784	**RTFC32793**
87″ High	*96″ High*
RTFC31587	**RTFC31596**
RTFC32787	**RTFC32796**
90″ High	
RTFC31590	
RTFC32790	

- Fluted front is 3/4″ solid wood; plain sawn wood supplied for quartersawn door styles
- Quartersawn Oak door styles have quartersawn wood veneer end panels
- Applied decorative rosette
- Finished front and both sides
- Reversible, may be used on either right or left end
- ***Not*** available in Rustic Alder, High-Gloss Foil or Wood-Grain Foil door styles
- Painted hardwood supplied for EverCore™ and Thermofoil
- Plain sawn material supplied for Barnet Crafted door styles
- ***Not*** available in Morristown

☆ APFC standard when APC option is selected

	PE
●	APC
☆	APFC
❖	FPEB
	MI
	CW
●	RD
	ID
●	CH
❖	WR

Tall End Panel

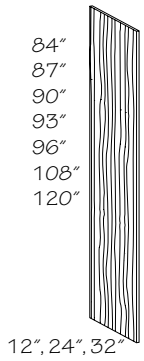

Viraguard
12″ Wide, 3/4″ Thick

- ■ **VTEP1284**
- ■ **VTEP1287**
- ■ **VTEP1290**
- ■ **VTEP1293**
- ■ **VTEP1296**

24″ Wide, 3/4″ Thick

- ■ **VTEP84**
- ■ **VTEP87**
- ■ **VTEP90**
- ■ **VTEP93**
- ■ **VTEP96**

32″ Wide, 3/4″ Thick

- ■ **DVTEP84**
- ■ **DVTEP87**
- ■ **DVTEP90**
- ■ **DVTEP93**
- ■ **DVTEP96**

Wood Veneer
12″ Wide, 13/16″ Thick

- ❄▲**WTEP1284**
- ❄▲**WTEP1287**
- ❄▲**WTEP1290**
- ❄▲**WTEP1293**
- ❄▲**WTEP1296**

24″ Wide, 13/16″ Thick

- ❄▲**WTEP84**
- ❄▲**WTEP87**
- ❄▲**WTEP90**
- ❄▲**WTEP93**
- ❄▲**WTEP96**

12″ Wide, 11/16″ Thick

- ❄▲**WTEP12108**
- ❄▲**WTEP12120**

24″ Wide, 11/16″ Thick

- ❄▲**WTEP108**
- ❄▲**WTEP120**

32″ Wide, 13/16″ Thick

- ❄▲**DWTEP84**
- ❄▲**DWTEP87**
- ❄▲**DWTEP90**
- ❄▲**DWTEP93**
- ❄▲**DWTEP96**

32″ Wide, 11/16″ Thick

- ❄▲**DWTEP108**
- ❄▲**DWTEP120**

■ ***Not*** available in Morristown; Melrose and Putnam supplied plain sawn
❄ Painted hardwood supplied for EverCore™ and Thermofoil
▲ Crafted or Quartersawn door styles will be supplied in plain sawn wood

- Finished to match exterior both sides
- Front edge banded to match
- ☆ APC is available for wood veneer panels only; APC is standard on 108″ and 120″ panels
- ☆ APC panel is 11/16″ thick
- Painted or Stained hardwood supplied for Wood-Grain Foil door styles

	PE
☆	APC
	APFC
	FPEB
	MI
	CW
	RD
	ID
●	CH
	WR

When using 48″–54″ high cabinets or tall stacked cabinet combinations, remember to supply the best height Tall End Panel (TEP) for your design needs. Both 108″ and 120″ panels can be field cut to height requirements of your design

Tall End Panel w/Stile

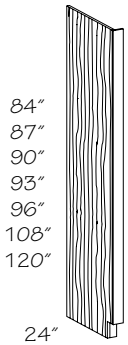

Specify R or L
84″ High

- **TEP1 1/2▪84 R or L**
- **TEP3▪84 R or L**

87″ High

- **TEP1 1/2▪87 R or L**
- **TEP3▪87 R or L**

90″ High

- **TEP1 1/2▪90 R or L**
- **TEP3▪90 R or L**

93″ High

- **TEP1 1/2▪93 R or L**
- **TEP3▪93 R or L**

96″ High

- **TEP1 1/2▪96 R or L**
- **TEP3▪96 R or L**

108″ High

- ☆ **TEP1 1/2▪108 R or L**
- ☆ **TEP3▪108 R or L**

120″ High

- ☆ **TEP1 1/2▪120 R or L**
- ☆ **TEP3▪120 R or L**

☆ Matching Interior All Plywood Furniture Construction (MIAPFC) standard on these sizes only

- Left shown
- Toe kick shipped attached
- Exterior finished to match, interior is Natural Birch Viraguard and machined to match a cabinet end panel
- Crafted or Quartersawn door styles will be supplied in plain sawn wood
- Painted hardwood supplied for EverCore™
- Painted or Stained hardwood supplied for Wood-Grain Foil door styles
- ☆ Maximum Increased Depth (ID) is 27″

●	PE
●	APC
●	APFC
●	FPEB
●	MI
	CW
●	RD
☆	ID
●	CH
	WR

Refrigerator End Panel w/Stile

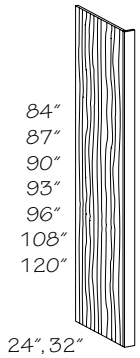

32″ Deep *84″ High*	*24″ Deep* *84″ High*
DREP1 1/2•84	**REP1 1/2•84**
DREP3•84	**REP3•84**
87″ High	*87″ High*
DREP1 1/2•87	**REP1 1/2•87**
DREP3•87	**REP3•87**
90″ High	*90″ High*
DREP1 1/2•90	**REP1 1/2•90**
DREP3•90	**REP3•90**
93″ High	*93″ High*
DREP1 1/2•93	**REP1 1/2•93**
DREP3•93	**REP3•93**
96″ High	*96″ High*
DREP1 1/2•96	**REP1 1/2•96**
DREP3•96	**REP3•96**
108″ High	*108″ High*
☆ **DREP1 1/2•108**	☆ **REP1 1/2•108**
☆ **DREP3•108**	☆ **REP3•108**
120″ High	*120″ High*
☆ **DREP1 1/2•120**	☆ **REP1 1/2•120**
☆ **DREP3•120**	☆ **REP3•120**

☆ Matching Interior All Plywood Furniture Construction (MIAPFC) standard on these sizes only

- Reversible
- Exterior finished to match, interior is Natural Birch Viraguard
- Painted hardwood supplied for EverCore™
- Painted or Stained hardwood supplied for Wood-Grain Foil door styles

●	PE
●	APC
☆	APFC
●	FPEB
☆	MI
	CW
●	RD
	ID
●	CH
	WR

Sub Zero End Panel

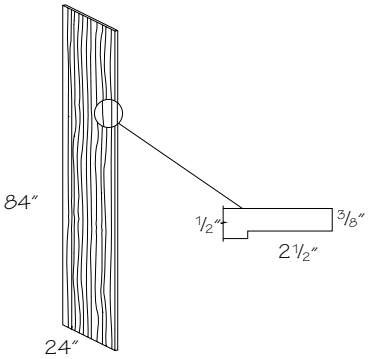

Wood Veneer
24″ Deep

❇† **WZEP84**

❇ Painted hardwood supplied for EverCore™ and Thermofoil

† Crafted or Quartersawn door styles will be supplied in plain sawn wood

- Reversible
- Panel notched to accept Sub Zero trim kit

☆ APC panel only available in wood veneer

☆ Maximum Increased Depth (ID) is 27″

Be sure to verify panel and appliance model compatibility

	PE
☆	APC
	APFC
	FPEB
	MI
	CW
●	RD
☆	ID
	CH
	WR

Matching Tall End Panel

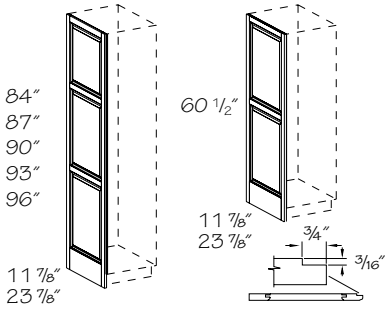

Standard edge detail—fits flush against 1/2″ end panel and behind face frame

Specify R or L *60 1/2″ High*	*Specify R or L* *90″ High*
❍❒ **MTEP1260 R or L**	❍ **MTEP1290 R or L**
❒ **MTEP2460 R or L**	**MTEP2490 R or L**
84″ High	*93″ High*
❍ **MTEP1284 R or L**	❍ **MTEP1293 R or L**
MTEP2484 R or L	**MTEP2493 R or L**
87″ High	*96″ High*
❍ **MTEP1287 R or L**	❍ **MTEP1296 R or L**
MTEP2487 R or L	**MTEP2496 R or L**

❍ Change Width (CW) option ***not*** available

❒ Change Height (CH) option ***not*** available

- 3/4″ thick panel with matching door edge profile on front edge only
- Matching panel may ***not*** align with the cabinet doors
- Left shown
- Field installation only
- ***Not*** available in Morristown
- ***Not*** available in High-Gloss Foil, Thermofoil or Wood-Grain Foil door styles
- ***Not*** available in mitered door styles; use End Panel–Mitered
- ***Not*** available in slab door styles

☆ Wide Bottom Rail—field notch for toe kick

When designing with Matching End Panels the reveal will differ from the cabinet door height reveal. Matching End Panels cover the entire side of the cabinet. See drawing for exact measurements

	PE
	APC
	APFC
	FPEB
	MI
☆	CW
	RD
	ID
☆	CH
☆	WR

Matching Tall End Panel–Square Edges

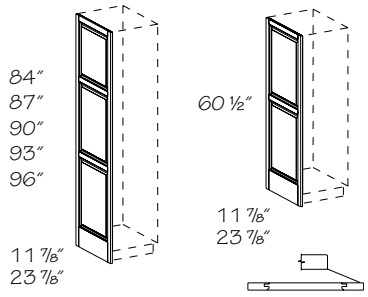

Will not fit flush against 1/2″ end panel, a 3/16″ shim is recommended

60 1/2″ High	*90″ High*
❍❒**MTEP1260 S**	❍ **MTEP1290 S**
❒ **MTEP2460 S**	**MTEP2490 S**
84″ High	*93″ High*
❍ **MTEP1284 S**	❍ **MTEP1293 S**
MTEP2484 S	**MTEP2493 S**
87″ High	*96″ High*
❍ **MTEP1287 S**	❍ **MTEP1296 S**
MTEP2487 S	**MTEP2496 S**

❍ Change Width (CW) option ***not*** available
❒ Change Height (CH) option ***not*** available

- 3/4″ thick panel with square edge front and back
- Matching panel may ***not*** align with the cabinet doors
- Field installation only
- Reversible, may be used on either right or left end
- No frame recess dado
- ***Not*** available in Morristown
- ***Not*** available in High-Gloss Foil, Thermofoil or Wood-Grain Foil door styles
- ***Not*** available in mitered door styles; use End Panel–Mitered
- ***Not*** available in slab door styles

☆ Wide Bottom Rail—field notch for toe kick

PE
APC
APFC
FPEB
MI
☆ CW
RD
ID
☆ CH
☆ WR

Furniture Matching Tall End Panel

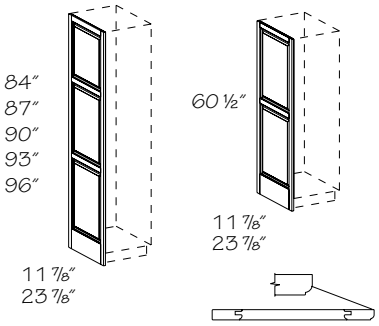

Specify R or L 60 1/2″ High	*Specify R or L 90″ High*
❄❍❒ **FMTEP1260 R or L**	❍ **FMTEP1290 R or L**
❄❒ **FMTEP2460 R or L**	**FMTEP2490 R or L**
84″ High	*93″ High*
❍ **FMTEP1284 R or L**	❍ **FMTEP1293 R or L**
FMTEP2484 R or L	**FMTEP2493 R or L**
87″ High	*96″ High*
❍ **FMTEP1287 R or L**	❍ **FMTEP1296 R or L**
FMTEP2487 R or L	**FMTEP2496 R or L**

❄ Painted hardwood supplied for EverCore™
❍ Change Width (CW) option ***not*** available
❒ Change Height (CH) option ***not*** available

- 3/4″ thick panel with matching door edge profile on front edge only
- Matching panel may ***not*** align with the cabinet doors
- Left shown
- Field installation only
- For use with Furniture Plywood Ends (FPEB)—flush ends
- ***Not*** available in Morristown
- ***Not*** available in High-Gloss Foil, Thermofoil or Wood-Grain Foil door styles
- ***Not*** available in mitered door styles; use End Panel–Mitered
- ***Not*** available in slab door styles

☆ Wide Bottom Rail—field notch for toe kick

PE
APC
APFC
FPEB
MI
☆ CW
RD
ID
☆ CH
☆ WR

Matching Tall End Panel–Mitered

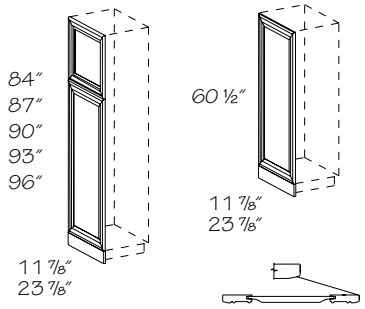

Will not fit flush against 1/2″ end panel, a 3/16″ shim is recommended

60 1/2″ High	*90″ High*
▲❍❒**M▪MTEP1260**	▲❍**M▪MTEP1290**
▲❒ **M▪MTEP2460**	▲ **M▪MTEP2490**
84″ High	*93″ High*
▲❍ **M▪MTEP1284**	▲❍**M▪MTEP1293**
▲ **M▪MTEP2484**	▲ **M▪MTEP2493**
87″ High	*96″ High*
▲❍ **M▪MTEP1287**	▲❍**M▪MTEP1296**
▲ **M▪MTEP2487**	▲ **M▪MTEP2496**

▲ ***Not*** available in Wood-Grain Foil door styles
❍ Change Width (CW) option ***not*** available
❒ Change Height (CH) option ***not*** available

- 3/4″ thick panel with matching door edge profile on four sides
- Inside of matching panel bottom rail will line up with inside bottom rail of door
- Field installation only
- Reversible, may be used on either right or left end
- Top, bottom and toe kick shipped separately
- Available in mitered door styles only
- ***Not*** available in High-Gloss Foil, Thermofoil or Wood-Grain Foil door styles

PE
APC
APFC
FPEB
MI
☆ CW
RD
ID
☆ CH
WR

Corner Tall End Panel

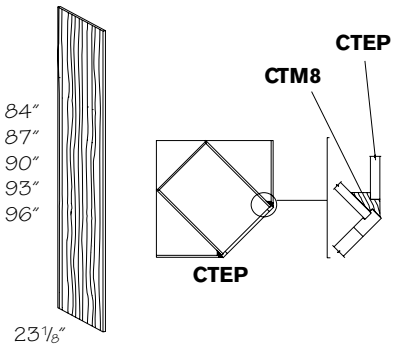

Wood Veneer	*Width x Height x Thickness*
WCTEP84	23 1/8″ x 84″ x 1/2″
WCTEP87	23 1/8″ x 87″ x 1/2″
WCTEP90	23 1/8″ x 90″ x 1/2″
WCTEP93	23 1/8″ x 93″ x 1/2″
WCTEP96	23 1/8″ x 96″ x 1/2″

- See Option #2 in Diagonal Installation of Standard Tall Cabinets in the back of the Tall Cabinets section
- Painted hardwood supplied for EverCore™
- Painted or Stained hardwood supplied for Wood-Grain Foil door styles
- Corner Tall End Panel (CTEP) and Corner Tall Molding (CTM8) are sold separately

PE
● APC
APFC
FPEB
MI
CW
RD
ID
CH
WR

Toe Kick

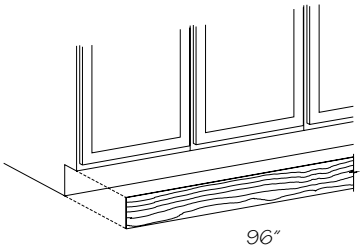

Black

† **BLTK8**

- 1/8" thick hardboard, 4 1/2" high

▲ **MTK8**

- 1/8" thick hardboard, 4 1/2" high, laminated with matching Viraguard

Aluminum finish

MTK8 ▪A

- 1/16″ thick flexible laminate, 4 1/2″ high

Stainless finish

MTK8 ▪S

- 1/16″ thick flexible laminate, 4 1/2″ high

❄■**WMTK8**

- 3/16" thick wood veneer, 4 1/2" high, to match

† Painted hardwood supplied for EverCore™

▲ ***Not*** available in Morristown; Melrose and Putnam supplied plain sawn

❄ Painted hardwood supplied for EverCore™ and Thermofoil

■ Painted or Stained hardwood supplied for Wood-Grain Foil door styles

- Edges are unfinished
- Field installation only
- ***Note:*** Matching toe kick is ***not*** automatically supplied with cabinets. It ***must*** be ordered as a separate item

Apply Shoe molding (SHO8) at the base of Matching Toe Kicks or Wood Matching Toe Kicks (MTK8 or WMTK8) for a nice, finished look.

Diagonal Installation of Standard Tall Cabinets

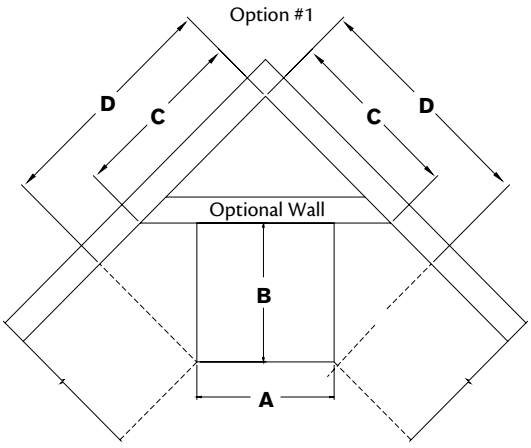

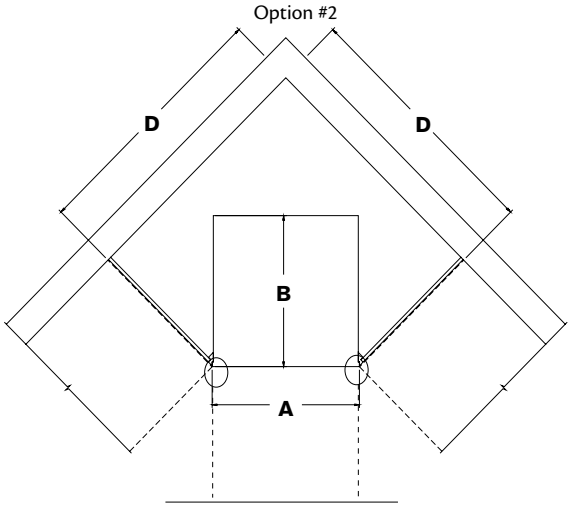

CTM8
Solid Wood Molding

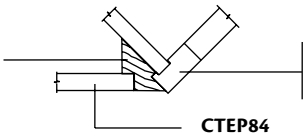

Note: Fillers are always recommended at both sides of cabinet junction points to allow for wall variations and drawer clearances. Corner Tall End Panel (CTEP) and Corner Tall Molding (CTM8) are sold separately

Cabinet Width "A"	Cabinet Depth "B"	Wall Dimensions "C"	Wall Dimensions "D"	Cabinet Depth "B"	Wall Dimensions "C"	Wall Dimensions "D"
15"	12"	18 ¼"	23 ¼"	24"	24 ⅜"	34 ⅝"
18"	12"	20 ⅜"	25 ⅜"	24"	26 ¾"	36 ¾"
24"	12"	24 ⅝"	29 ⅝"	24"	31"	40 15⁄16"
27"	N/A	N/A	N/A	24"	33 ⅛"	43 1⁄16"
30"	12"	28 ⅞"	33 ⅞"	24"	35 ¼"	45 3⁄16"
33"	N/A	N/A	N/A	24"	37 ⅜"	47 5⁄16"
36"	12"	33 ⅛"	38 ⅛"	24"	39 ½"	49 ½"

Vanity Cabinets

VCD	30	18	34
code	width	depth	height

Construction Options and Modifications

❖ Included as standard
● Available with an upcharge
☆ Available with exceptions
(Blank) ***Not*** available

PE	Plywood Ends
APC	All Plywood Construction
APFC	All Plywood Furniture Construction
FPEB	Furniture Plywood Ends
MI	Matching Interior
DE	Integrated Decorative End
OE	Operational End
AD_E	Attached Decorative End
CW	Change Width
RD	Reduced Depth
ID	Increased Depth
CH	Change Height
IF	Inverted Frame
TWR	Top Wide Rail
WR	Wide Bottom Rail
XS	Extended Stile
GD	Glass Doors
RTK	Recessed Toe Kick
VTK	Void Toe Kick
TKD	Toe Kick Drawer

Note: Standard vanity cabinet box depth is 18" or 21" unless stated otherwise. Add door thickness for total depth. Standard vanity cabinet height is 34 1/2" unless stated otherwise.

All double door cabinets will have butt doors unless stated otherwise. When BUTT is in all capitals, it ***must*** be included as part of your ordering nomenclature. A (Butt) in parentheses is for your information and isn't required on an order form.

Material dimensions listed may vary slightly from actual dimensions of the product.

Specifications subject to change without notice.

Wall Hung Vanity

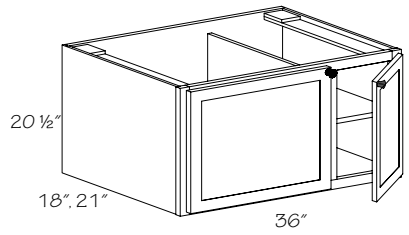

Offset Left shown

Offset Right
12" wide left door with single shelf;
24" wide right door
WHVOR3618
WHVOR3621

Offset Left
12" wide right door with single shelf;
24" wide left door
WHVOL3618
WHVOL3621

- U-shaped Deluxe Roll-out Tray (UDXROT) available on 24" side (optional)
- Installation instructions included

	PE		ID
	APC		CH
❖	APFC		IF
	FPEB		TWR
●	MI		WR
	DE		XS
	OE	●	GD
●	AD_E		RTK
	CW		VTK
	RD		TKD

Wall Hung Vanity Full-Height Door

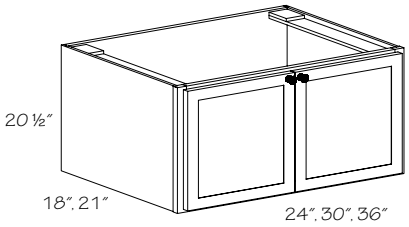

18" Deep
WHVC2418
WHVC3018
WHVC3618

21" Deep
WHVC2421
WHVC3021
WHVC3621

- Full-height BUTT doors
- U-shaped Deluxe Roll-out Tray (UDXROT) available (optional)
- Installation instructions included

	PE		ID
	APC		CH
❖	APFC		IF
	FPEB		TWR
●	MI		WR
	DE		XS
	OE	●	GD
●	AD_E		RTK
	CW		VTK
	RD		TKD

Wall Hung Vanity Combination Drawer

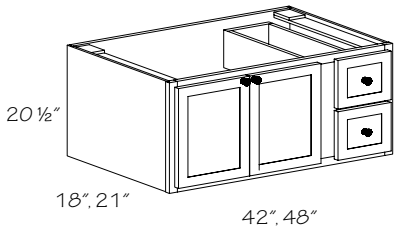

Drawers Right shown

Drawers Right
18" Deep
WHVCD4218 DR 30" left BUTT door section
WHVCD4818 DR 36" left BUTT door section

Drawers Left
18" Deep
WHVCD4218 DL 30" right BUTT door section
WHVCD4818 DL 36" right BUTT door section

Drawers Right
21" Deep
WHVCD4221 DR 30" left BUTT door section
WHVCD4821 DR 36" left BUTT door section

Drawers Left
21" Deep
WHVCD4221 DL 30" right BUTT door section
WHVCD4821 DL 36" right BUTT door section

- 12" wide drawers
- U-shaped Deluxe Roll-out Tray (UDXROT) available (optional)
- Installation instructions included

	PE		ID
	APC		CH
❖	APFC		IF
	FPEB		TWR
●	MI		WR
	DE		XS
	OE	●	GD
●	AD_E		RTK
	CW		VTK
	RD		TKD

U-Shaped Deluxe Roll-out Tray

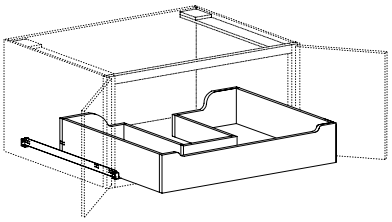

Field Installation
18" Deep

UDXROT24 .18
UDXROT30 .18
UDXROT36 .18

21" Deep

UDXROT24 .21
UDXROT30 .21
UDXROT36 .21

Factory Installation
18"-21" Deep

1UDXROT

- Designed specifically for Wall Hung Vanity (WHVOR, WHVC and WHVCD) cabinets
- Full extension runner, pulls out past the face frame

PE	ID
APC	CH
APFC	IF
FPEB	TWR
MI	WR
DE	XS
OE	GD
AD_E	RTK
CW	VTK
RD	TKD

Model	Opening	A	B	C	D	E
UDXROT24.18	21"	14 3/4"	7 1/3"	5 1/4"	3 3/4"	19 16/17"
UDXROT30.18	27"	14 3/4"	10 1/3"	6 2/3"	3 3/4"	25 16/17"
UDXROT36.18	33"	14 3/4"	13 1/3"	6 2/3"	3 3/4"	31 37/39"
UDXROT24.21	21"	17 5/7"	7 1/3"	5 1/4"	3 3/4"	19 16/17"
UDXROT30.21	27"	17 5/7"	10 1/3"	6 2/3"	3 3/4"	25 16/17"
UDXROT36.21	33"	17 5/7"	13 1/3"	6 2/3"	3 3/4"	31 37/39"

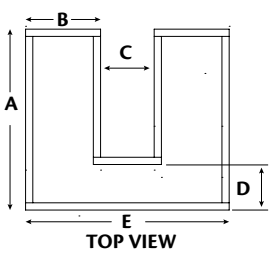

TOP VIEW

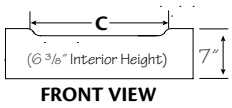

FRONT VIEW

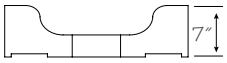

BACK VIEW

Wall Hung Vanity Drawer

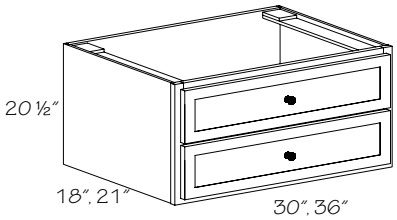

18" Deep

WHVD3018
WHVD3618

21" Deep

WHVD3021
WHVD3621

- False front top
- 7" U-shaped bottom drawer scooped to 3" in the back
- 11/16" full plywood back panel
- Installation instructions included

PE	ID
APC	CH
❖ APFC	IF
FPEB	TWR
● MI	WR
DE	XS
OE	GD
● AD_E	RTK
CW	VTK
RD	TKD

Vanity Sink Base Single Door

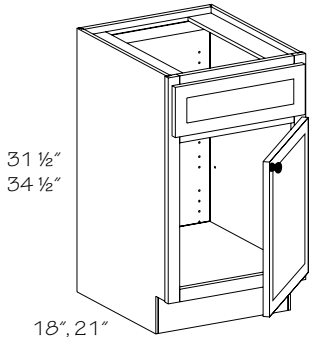

Specify R or L
31 1/2" High, 18" Deep

VSB181831 R or L
VSB211831 R or L

31 1/2" High, 21" Deep

VSB182131 R or L
VSB212131 R or L

Specify R or L
34 1/2" High, 16" Deep

■☆† **VSB181634 R or L**
■☆† **VSB211634 R or L**

34 1/2" High, 18" Deep

VSB181834 R or L
VSB211834 R or L

34 1/2" High, 21" Deep

VSB182134 R or L
VSB212134 R or L

- Single door and drawer front
- Optional Utensil Trays (UT and SUT) are available

☆ Operational End (OE) is ***not*** available with Reduced Depth (RD) options

● PE	ID
● APC	● CH
● APFC	IF
● FPEB	● TWR
● MI	● WR
● DE	● XS
☆ OE	● GD
☆ AD_E	● RTK
● CW	● VTK
● RD	☆ TKD

■ ***Not*** available with Operational End Door (OE) option
☆ Attached Decorative Ends (AD_E) option ***not*** available
† Toe Kick Drawer (TKD) option ***not*** available

Vanity Sink Base Double Door

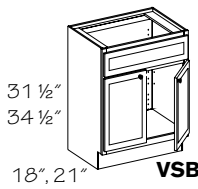

VSB24-36

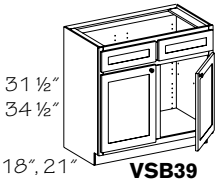

VSB39

31 1/2" High, 18" Deep	*34 1/2" High, 18" Deep*
❍ **VSB241831**	❍ **VSB241834**
VSB271831	**VSB271834**
VSB301831	**VSB301834**
VSB331831	**VSB331834**
VSB361831	**VSB361834**
◆▲**VSB391831**	◆▲**VSB391834**
31 1/2" High, 21" Deep	*34 1/2" High, 21" Deep*
❍ **VSB242131**	❍ **VSB242134**
VSB272131	**VSB272134**
VSB302131	**VSB302134**
VSB332131	**VSB332134**
VSB362131	**VSB362134**
◆▲**VSB392131**	◆▲**VSB392134**

❍ Change Width (CW) option ***not*** available

◆ 3" center stile

▲ Deluxe Dovetailed full-width Trays (DXFWT) ***not*** available

- Single or double drawer front
- Optional Utensil Trays (UT and SUT) are available

☆ Operational End (OE) is ***not*** available with Reduced Depth (RD) options

● PE	ID
● APC	● CH
● APFC	IF
● FPEB	● TWR
● MI	● WR
● DE	● XS
☆ OE	● GD
● AD_E	● RTK
☆ CW	● VTK
● RD	● TKD

Vanity Sink Base Three Door

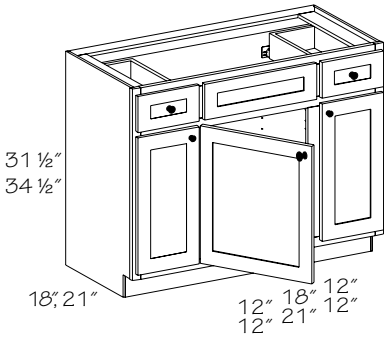

31 1/2" High, 18" Deep	*34 1/2" High, 18" Deep*
VSB421831	**VSB421834**
† **VSB451831**	† **VSB451834**
31 1/2" High, 21" Deep	*34 1/2" High, 21" Deep*
VSB422131	**VSB422134**
† **VSB452131**	† **VSB452134**

† Toe Kick Drawer (TKD) option ***not*** available

- Two working drawers with one false drawer front
- Center door hinged left only

☆ Operational End (OE) is ***not*** available with Reduced Depth (RD) options

☆ Glass inserts ***not*** available on ends

● PE	ID
● APC	CH
● APFC	IF
● FPEB	● TWR
● MI	● WR
● DE	● XS
☆ OE	☆ GD
● AD_E	● RTK
CW	● VTK
● RD	☆ TKD

Vanity Sink Base Four Door

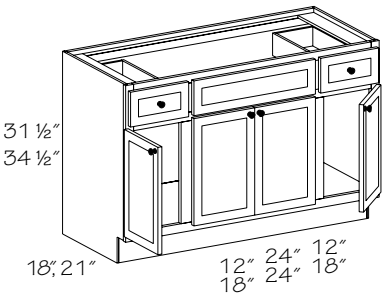

31 1/2" High, 18" Deep

VSB481831

VSB601831

31 1/2" High, 21" Deep

VSB482131

VSB602131

34 1/2" High, 18" Deep

VSB481834

VSB601834

34 1/2" High, 21" Deep

VSB482134

VSB602134

- Two working drawers with one false drawer front

☆ Operational End (OE) is ***not*** available with Reduced Depth (RD) options

● PE	ID
● APC	CH
● APFC	IF
● FPEB	● TWR
● MI	● WR
● DE	● XS
☆ OE	● GD
● AD_E	● RTK
CW	● VTK
● RD	TKD

Vanity Sink Base–Fluted Clipped Corners

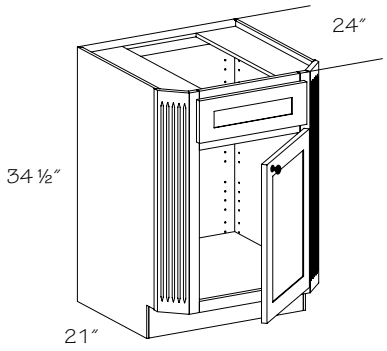

Specify R or L

VSBFCC242434 R or L
VSBFCC272434 R or L
VSBFCC302434
VSBFCC332434

- Angled stiles extend 3″ each side
- No shelf
- Single drawer front
- Optional Utensil Trays (UT and SUT) are available
- Optional Door Storage Unit (SBDSU) is available
- Nominal width is overall cabinet width. Order Example: VSBFCC302434 is 30″ wide
- Factory installed Roll-out Trays (ROT) are ***not*** available
- ***Not*** available in Morristown; Melrose and Putnam supplied plain sawn

●	PE		ID
●	APC		CH
●	APFC		IF
●	FPEB	●	TWR
	MI		WR
	DE		XS
	OE	●	GD
●	AD_E		RTK
	CW	●	VTK
	RD		TKD

Vanity Sink Base Two Drawer

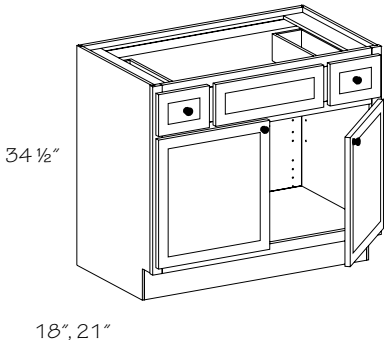

18″ Deep

VSB361834 ▪2

21″ Deep

VSB362134 ▪2

- Two working drawers
- 18″ center section with false drawer front

☆ Operational End (OE) is ***not*** available with Reduced Depth (RD) options

●	PE		ID
●	APC		CH
●	APFC		IF
●	FPEB	●	TWR
●	MI	●	WR
●	DE	●	XS
☆	OE	●	GD
●	AD_E	●	RTK
	CW	●	VTK
●	RD	●	TKD

Vanity Sink Base Three Drawer

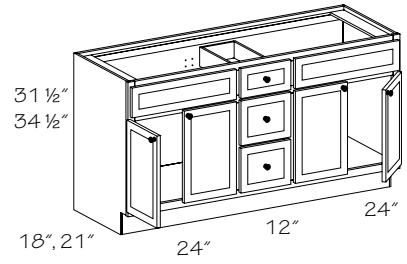

18″ Deep

■ **VSB601831 ▪3**
VSB601834 ▪3

21″ Deep

■ **VSB602131 ▪3**
VSB602134 ▪3

■ ***Not*** available with Operational End Door (OE) option

- Two pair of butt doors
- Three drawer stack in center
- Optional Vanity Wood Tiered Drawer Storage (VWTDS), Vanity Shallow Wood Tiered Drawer Storage (VSWTDS) and Vanity Adjustable Drawer Divider (VADD) are available

☆ Operational End (OE) is ***not*** available with Reduced Depth (RD) options

●	PE		ID
●	APC		CH
●	APFC		IF
●	FPEB	●	TWR
●	MI	●	WR
●	DE	●	XS
☆	OE	●	GD
●	AD_E	●	RTK
	CW	●	VTK
●	RD		TKD

Vanity Sink Base Four Drawer

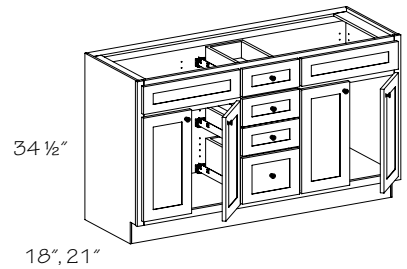

18″ Deep

VSB601834 ▪4

21″ Deep

VSB602134 ▪4

- Two pair of butt doors
- Four drawer stack in center
- Three standard height drawers
- One deep drawer
- Two drawer fronts
- Scoop Top Drawer (STDW) option available
- Optional Vanity Wood Tiered Drawer Storage (VWTDS), Vanity Shallow Wood Tiered Drawer Storage (VSWTDS) and Vanity Adjustable Drawer Divider (VADD) are available

☆ Operational End (OE) is ***not*** available with Reduced Depth (RD) options

●	PE		ID
●	APC		CH
●	APFC		IF
●	FPEB	●	TWR
●	MI	●	WR
●	DE	●	XS
☆	OE	●	GD
●	AD_E	●	RTK
	CW	●	VTK
●	RD		TKD

Console Vanity

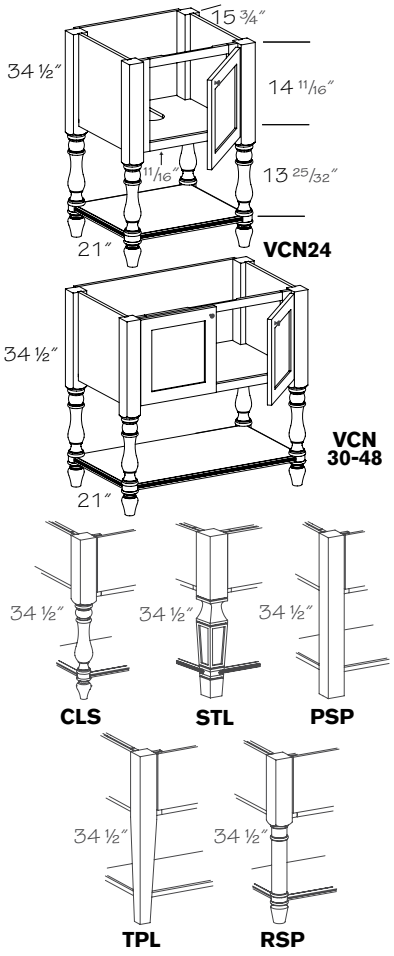

Specify R or L
Classic Leg

VCN242134 R or L▪CLS
VCN302134 ▪CLS
VCN362134 ▪CLS
VCN422134 ▪CLS
VCN482134 ▪CLS

Plain Square Post

VCN242134 R or L▪PSP
VCN302134 ▪PSP
VCN362134 ▪PSP
VCN422134 ▪PSP
VCN482134 ▪PSP

Roman Spindle

VCN242134 R or L▪RSP
VCN302134 ▪RSP
VCN362134 ▪RSP
VCN422134 ▪RSP
VCN482134 ▪RSP

Sterling Leg

VCN242134 R or L▪STL
VCN302134 ▪STL
VCN362134 ▪STL
VCN422134 ▪STL
VCN482134 ▪STL

Tapered Leg

VCN242134 R or L▪TPL
VCN302134 ▪TPL
VCN362134 ▪TPL
VCN422134 ▪TPL
VCN482134 ▪TPL

PE	ID
APC	CH
❖ APFC	IF
FPEB	TWR
❖ MI	WR
DE	XS
OE	GD
AD_E	RTK
CW	VTK
RD	TKD

- Available in full overlay door styles only
- Available in Cherry, EverCore™, High-Gloss Foil, Laminate, Wood-Grain Foil and Maple door styles only
- Painted hardwood supplied for EverCore™ and Thermofoil
- Painted hardwood supplied for Wood-Grain Foil door styles; only available in white
- Open area height from top of bottom shelf to cabinet frame is 13″
- Plumbing cutout is centered; measures 4 1/4″ x 10″
- Contrasting Back Options (CBEB, CPLB, CVGR) ***not*** available
- Console Vanity Deluxe Roll-Out Tray (CDXROT) is available for factory or field installation in 30″, 36″ and 42″ VCN wide cabinets

For a finished look, we recommend attaching replacement doors to the end panels (RD1515NH.B — sold separately, qty. 2 needed if covering both ends)

In order to complete the furniture look on your console vanity, limit your countertop overhang to 1/8″ on the front and both sides. A standard size vanity countertop will work with the console vanity, but keep in mind the countertop overhang to the front will only be 1/8″; overhang on the sides will be 1/2″. Be sure to account for the positioning of the vanity bowl in relation to the cabinet. If you use a large vanity bowl or if your bowl is positioned too far forward, you may need to notch the inside top rail of the frame in order to accommodate the bowl.

Console Vanity Deluxe Roll-Out Tray

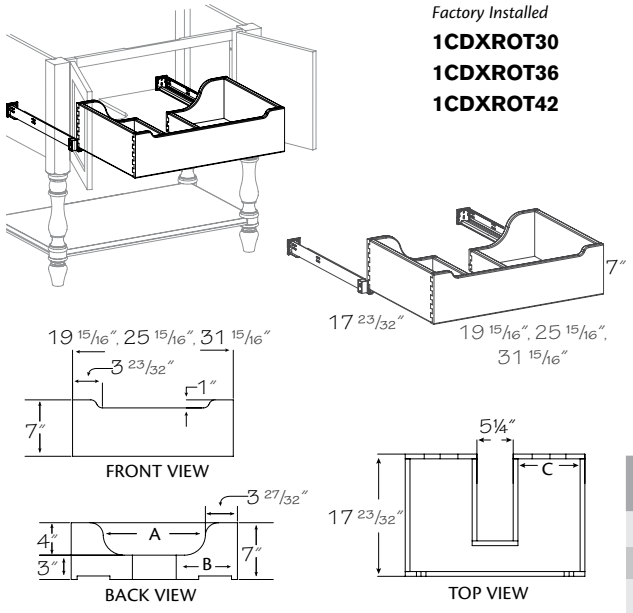

Factory Installed	*Field Installed*
1CDXROT30	**CDXROT30**
1CDXROT36	**CDXROT36**
1CDXROT42	**CDXROT42**

- Designed specifically for Console Vanity (VCN) cabinets
- Full extension runner, pulls out past the face frame
- Trays are 7″ high and 17 23/32″ deep

PE	ID
APC	CH
APFC	IF
FPEB	TWR
MI	WR
DE	XS
OE	GD
AD_E	RTK
CW	VTK
RD	TKD

	Dimension A	Dimension B	Dimension C
CDXROT30	12 1/4″	7 11/32″	5 15/16″
CDXROT36	15 1/4″	10 11/32″	8 15/16″
CDXROT42	18 1/4″	13 11/32″	11 15/16″

Vanity Sink Base Bottom Drawer

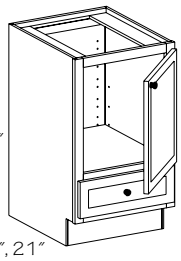

VSB18

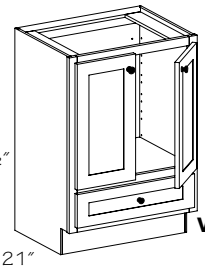

VSB24-36

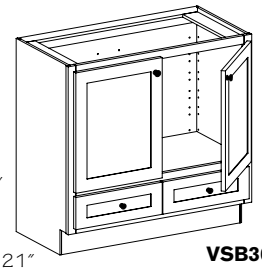

VSB36•2BD

Specify R or L
16″ Deep

✢ **VSB181634 R or L•BD**

18″ Deep

VSB181834 R or L•BD
❍ **VSB241834 •BD**
VSB301834 •BD
VSB361834 •BD
▲ **VSB361834 •2BD**

21″ Deep

VSB182134 R or L•BD
❍ **VSB242134 •BD**
VSB302134 •BD
VSB362134 •BD
▲ **VSB362134 •2BD**

❍ Change Width (CW) option ***not*** available
▲ Two drawers side by side
✢ Attached Decorative Ends (AD_E) option ***not*** available

- 2 1/4″ high drawer box

●	PE		ID
●	APC	●	CH
●	APFC		IF
●	FPEB		TWR
●	MI	●	WR
	DE	●	XS
	OE	●	GD
☆	AD_E	●	RTK
☆	CW	●	VTK
●	RD	●	TKD

Vanity Sink Front

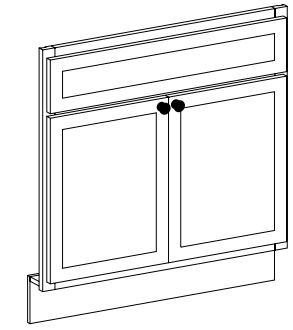

Specify R or L
34 1/2″ High

VSF1834 R or L
❍ **VSF2434**
VSF3034
VSF3634

❍ Change Width (CW) option ***not*** available

- Includes floor; shipped loose
- Toe kick included
- Optional Utensil Trays (UT and SUT) are available
- ***Not*** trimmable

	PE		ID
●	APC	●	CH
	APFC		IF
	FPEB	●	TWR
	MI	●	WR
	DE	●	XS
	OE	●	GD
	AD_E		RTK
☆	CW	●	VTK
	RD		TKD

Vanity Sink Base Angle–Full-Height

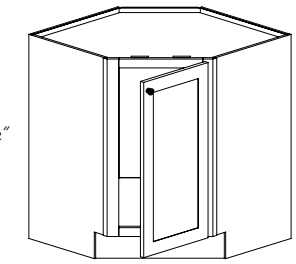

Specify R or L

VSBA301834 R or L•FH
VSBA332134 R or L•FH

All dimensions are to outside of frame

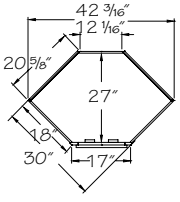

VSBA30

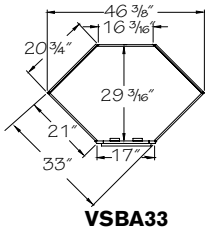

VSBA33

- No shelf
- Angled back provides clearance for installation
- Back Options (BEB and VGRB) ***not*** available
- Contrasting Back Options (CBEB, CPLB, CVGR) ***not*** available
- ***Note:*** Full overlay door styles use a 1/2″ overlay hinge



Full overlay doors on cabinets with an angled front are intentionally narrower to allow proper clearance of adjacent cabinets.

●	PE		ID
●	APC	●	CH
●	APFC		IF
●	FPEB	●	TWR
●	MI	●	WR
	DE		XS
	OE	●	GD
	AD_E	●	RTK
	CW	●	VTK
	RD		TKD

Vanity Sink Base Angle–Single Door

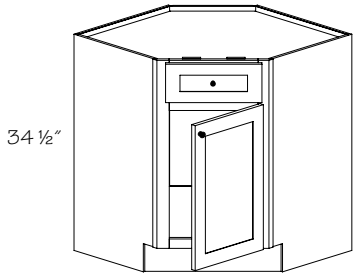

Specify R or L

VSBA301834 R or L

VSBA332134 R or L

All dimensions are to outside of frame

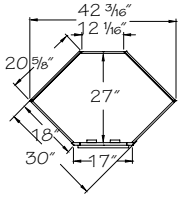

VSBA30

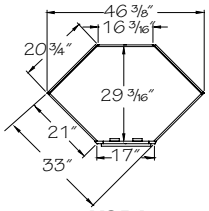

VSBA33

●	PE		ID
●	APC	●	CH
●	APFC		IF
●	FPEB	●	TWR
●	MI	●	WR
	DE		XS
	OE	●	GD
	AD_E	●	RTK
	CW	●	VTK
	RD		TKD

- No shelf
- One drawer front
- Optional Utensil Trays (UT and SUT) are available
- Angled back provides clearance for installation
- Back Options (BEB and VGRB) ***not*** available
- Contrasting Back Options (CBEB, CPLB, CVGR) ***not*** available
- ***Note:*** Full overlay door styles use a 1/2″ overlay hinge

Vanity Sink Base Angle–Double Door

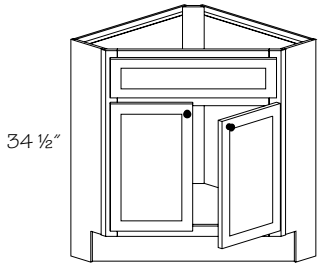

VSBA242434

All dimensions are to outside of frame

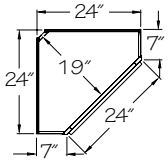

VSBA24

●	PE		ID
●	APC	●	CH
●	APFC		IF
●	FPEB	●	TWR
●	MI	●	WR
	DE		XS
	OE	●	GD
	AD_E	●	RTK
	CW	●	VTK
	RD		TKD

- No shelf
- One drawer front
- Angled back provides clearance for installation
- Optional Utensil Trays (UT and SUT) are available
- Contrasting Back Options (CBEB, CPLB, CVGR) ***not*** available
- Back Options (BEB and VGRB) ***not*** available

Cultured Marble Top

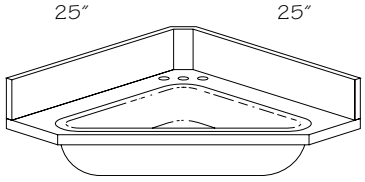

CMT2525 ▪102

CMT2525 ▪201

PE	ID
APC	CH
APFC	IF
FPEB	TWR
MI	WR
DE	XS
OE	GD
AD_E	RTK
CW	VTK
RD	TKD

- Strata White #102 (White on White)
- Classic White #201 (solid White)
- One piece construction with 4″ backsplash
- No-drip raised perimeter edge
- Integral 4″ faucet drilling
- HUD-FHA ANSI Z124.3 approved

Vanity Combination Drawer (2)

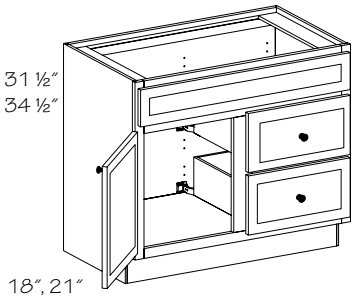

Drawers Left

31 1/2" High, 18" Deep	*Drawer-Door widths*
VCD241831 DL2	12-12
VCD271831 DL2	12-15
VCD301831 DL2	12-18
VCD331831 DL2	12-21
VCD361831 DL2	15-21
VCD391831 DL2	15-24
21" Deep	
VCD242131 DL2	12-12
VCD272131 DL2	12-15
VCD302131 DL2	12-18
VCD332131 DL2	12-21
VCD362131 DL2	15-21
VCD392131 DL2	15-24
34" High, 18" Deep	
VCD241834 DL2	12-12
VCD271834 DL2	12-15
VCD301834 DL2	12-18
VCD331834 DL2	12-21
VCD361834 DL2	15-21
VCD391834 DL2	15-24
21" Deep	
VCD242134 DL2	12-12
VCD272134 DL2	12-15
VCD302134 DL2	12-18
VCD332134 DL2	12-21
VCD362134 DL2	15-21
VCD392134 DL2	15-24

Drawers Right

31 1/2" High, 18" Deep	*Door-Drawer widths*
VCD241831 DR2	12-12
VCD271831 DR2	15-12
VCD301831 DR2	18-12
VCD331831 DR2	21-12
VCD361831 DR2	21-15
VCD391831 DR2	15-24
21" Deep	
VCD242131 DR2	12-12
VCD272131 DR2	15-12
VCD302131 DR2	18-12
VCD332131 DR2	21-12
VCD362131 DR2	21-15
VCD392131 DR2	15-24
34 1/2" High, 18" Deep	
VCD241834 DR2	12-12
VCD271834 DR2	15-12
VCD301834 DR2	18-12
VCD331834 DR2	21-12
VCD361834 DR2	21-15
VCD391834 DR2	15-24
21" Deep	
VCD242134 DR2	12-12
VCD272134 DR2	15-12
VCD302134 DR2	18-12
VCD332134 DR2	21-12
VCD362134 DR2	21-15
VCD392134 DR2	15-24

- Two deep drawers
- One drawer front
- Optional Vanity Wood Tiered Drawer Storage (VWTDS), Vanity Shallow Wood Tiered Drawer Storage (VSWTDS) and Vanity Adjustable Drawer Divider (VADD) are available

●	PE		ID
●	APC		CH
●	APFC		IF
●	FPEB	●	TWR
●	MI	●	WR
●	DE	●	XS
	OE	●	GD
●	AD_E	●	RTK
	CW	●	VTK
●	RD	●	TKD

Grey color coding indicates new product, size or code.

Vanity Combination Drawer (3)

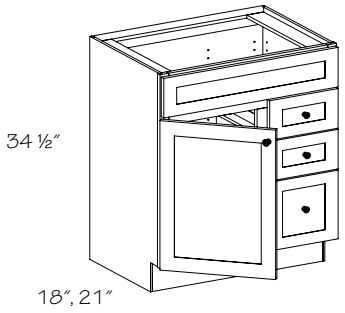

	Drawers Left *34 1/2″ High, 18″ Deep*	*Drawer-Door widths*
❄	**VCD241834 DL3**	12-12
	VCD271834 DL3	12-15
	VCD301834 DL3	12-18
	VCD331834 DL3	12-21
	VCD361834 DL3	15-21
	VCD391834 DL3	15-24
	34 1/2″ Hight, 21″ Deep	
❄	**VCD242134 DL3**	12-12
	VCD272134 DL3	12-15
	VCD302134 DL3	12-18
	VCD332134 DL3	12-21
	VCD362134 DL3	15-21
	VCD392134 DL3	15-24
	Drawers Right *34 1/2″ High, 18″ Deep*	*Door-Drawer widths*
❄	**VCD241834 DR3**	12-12
	VCD271834 DR3	15-12
	VCD301834 DR3	18-12
	VCD331834 DR3	21-12
	VCD361834 DR3	21-15
	VCD391834 DR3	15-24
	34 1/2″ High, 21″ Deep	
❄	**VCD242134 DR3**	12-12
	VCD272134 DR3	15-12
	VCD302134 DR3	18-12
	VCD332134 DR3	21-12
	VCD362134 DR3	21-15
	VCD392134 DR3	15-24

❄ Sink Base Door Storage Unit (SBDSU) ***not*** available

Grey color coding indicates new product, size or code.

- One drawer front
- Two standard drawers
- One deep drawer
- Optional Door Storage Unit (SBDSU) is available
- Optional Vanity Wood Tiered Drawer Storage (VWTDS), Vanity Shallow Wood Tiered Drawer Storage (VSWTDS) and Vanity Adjustable Drawer Divider (VADD) are available

●	PE		ID
●	APC		CH
●	APFC		IF
●	FPEB	●	TWR
●	MI	●	WR
●	DE	●	XS
	OE	●	GD
●	AD_E	●	RTK
	CW	●	VTK
●	RD	●	TKD

Vanity Combination Drawer–Full False Front (4)

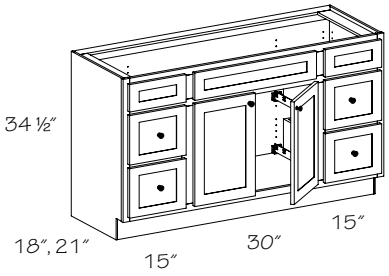

18″ Deep

VCDF601834 ▪4

21″ Deep

VCDF602134 ▪4

- Four deep drawers
- Three drawer fronts
- Optional Vanity Wood Tiered Drawer Storage (VWTDS), Vanity Shallow Wood Tiered Drawer Storage (VSWTDS) and Vanity Adjustable Drawer Divider (VADD) are available

●	PE		ID
●	APC		CH
●	APFC		IF
●	FPEB	●	TWR
●	MI	●	WR
●	DE	●	XS
	OE	●	GD
●	AD_E	●	RTK
	CW	●	VTK
●	RD		TKD

Vanity Combination Drawer–Full False Front (6)

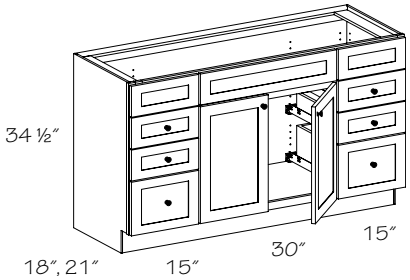

18″ Deep

VCDF601834 ▪6

21″ Deep

VCDF602134 ▪6

- Four standard drawers
- Two deep drawers
- Three drawer fronts
- Optional Door Storage Unit (SBDSU) is available
- Optional Vanity Wood Tiered Drawer Storage (VWTDS), Vanity Shallow Wood Tiered Drawer Storage (VSWTDS) and Vanity Adjustable Drawer Divider (VADD) are available

●	PE		ID
●	APC		CH
●	APFC		IF
●	FPEB	●	TWR
●	MI	●	WR
●	DE	●	XS
	OE	●	GD
●	AD_E	●	RTK
	CW	●	VTK
●	RD		TKD

Vanity Combination Drawer (6)

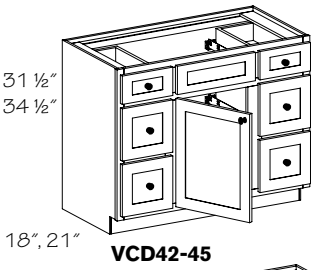

VCD42-45

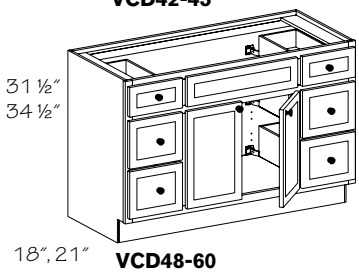

VCD48-60

Specify R or L *31 1/2" High, 18" Deep*	*Drawer-Door-Drawer*
▲† **VCD421831 R or L▪6**	12″-18″-12″
▲ **VCD451831 R or L▪6**	12″-21″-12″
VCD481831 ▪6	12″-24″-12″
VCD511831 ▪6	12″-27″-12″
VCD541831 ▪6	15″-24″-15″
VCD571831 ▪6	15″-27″-15″
VCD601831 ▪6	15″-30″-15″
21″ Deep	
▲† **VCD422131 R or L▪6**	12″-18″-12″
▲ **VCD452131 R or L▪6**	12″-21-12″
VCD482131 ▪6	12″-24″-12″
VCD512131 ▪6	12″-27″-12″
VCD542131 ▪6	15″-24″-15″
VCD572131 ▪6	15″-27″-15″
VCD602131 ▪6	15″-30″-15″
34 1/2″ High, 18″ Deep	
▲† **VCD421834 R or L▪6**	12″-18″-12″
▲ **VCD451834 R or L▪6**	12″-21″-12″
VCD481834 ▪6	12″-24″-12″
VCD511834 ▪6	12″-27″-12″
VCD541834 ▪6	15″-24″-15″
VCD571834 ▪6	15″-27″-15″
VCD601834 ▪6	15″-30″-15″
21″ Deep	
▲† **VCD422134 R or L▪6**	12″-18″-12″
▲ **VCD452134 R or L▪6**	12″-21″-12″
VCD482134 ▪6	12″-24″-12″
VCD512134 ▪6	12″-27″-12″
VCD542134 ▪6	15″-24″-15″
VCD572134 ▪6	15″-27″-15″
VCD602134 ▪6	15″-30″-15″

▲ Optional Door Storage Unit (SBDSU) is available

† Available with Toe Kick Drawer (TKD) option

- Two standard drawers
- Four deep drawers
- One drawer front
- Optional Vanity Wood Tiered Drawer Storage (VWTDS), Vanity Shallow Wood Tiered Drawer Storage (VSWTDS) and Vanity Adjustable Drawer Divider (VADD) are available

●	PE		ID
●	APC		CH
●	APFC		IF
●	FPEB	●	TWR
●	MI	●	WR
●	DE	●	XS
	OE	●	GD
●	AD_E	●	RTK
	CW	●	VTK
●	RD	☆	TKD

Vanity Combination Drawer (8)

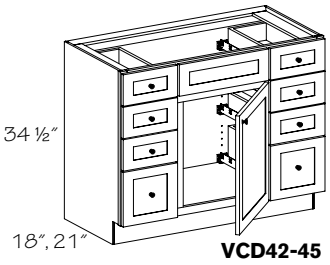

VCD42-45

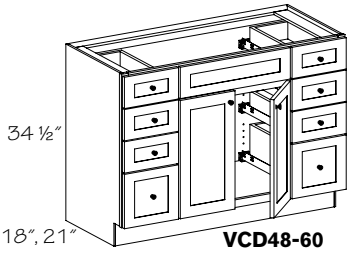

VCD48-60

Specify R or L *18″ Deep*	*Drawer-Door-Drawer*
▲† **VCD421834 R or L▪8**	12″-18″-12″
▲ **VCD451834 R or L▪8**	12″-21″-12″
VCD481834 ▪8	12″-24″-12″
VCD511834 ▪8	12″-27″-12″
VCD541834 ▪8	15″-24″-15″
VCD571834 ▪8	15″-27″-15″
▲ **VCD601834 ▪8**	15″-30″-15″
21″ Deep	
▲† **VCD422134 R or L▪8**	12″-18″-12″
▲ **VCD452134 R or L▪8**	12″-21″-12″
VCD482134 ▪8	12″-24″-12″
VCD512134 ▪8	12″-27″-12″
VCD542134 ▪8	15″-24″-15″
VCD572134 ▪8	15″-27″-15″
▲ **VCD602134 ▪8**	15″-30″-15″

▲ Optional Door Storage Unit (SBDSU) is available

† Available with Toe Kick Drawer (TKD) option

- Six standard drawers
- Two deep drawers
- Scoop Top Drawer (STDW) option available
- Optional Vanity Wood Tiered Drawer Storage (VWTDS), Vanity Shallow Wood Tiered Drawer Storage (VSWTDS) and Vanity Adjustable Drawer Divider (VADD) are available

●	PE		ID
●	APC		CH
●	APFC		IF
●	FPEB	●	TWR
●	MI	●	WR
●	DE	●	XS
	OE	●	GD
●	AD_E	●	RTK
	CW	●	VTK
●	RD	☆	TKD

CoreGuard® Vanity

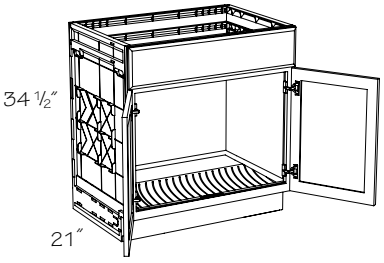

VSB242134 ▪CG
VSB272134 ▪CG
VSB302134 ▪CG
VSB332134 ▪CG
VSB362134 ▪CG

PE	ID
APC	CH
APFC	IF
FPEB	● TWR
MI	WR
DE	● XS
OE	GD
AD_E	RTK
CW	VTK
RD	TKD

- Easy to clean and durable sink base helps protect the cabinetry from everyday leaks and spills
- Back, end and bottom panels are made of an engineered polymer material
- Bottom panel slants 1º toward front of cabinet and has raised ribs to slightly elevate stored items
- Decorative end panel required for end of peninsula or island. ***Not*** included, order separately
- No shelf
- One full-width false drawer front above doors
- Use CoreGuard® Panel Backer in the paneling section to resolve cutting and installation errors
- Optional Door Storage Unit (SBDSU) is available
- Optional Utensil Trays (UT and SUT) are available
- Will ***not*** accept Roll-out Trays (ROT)
- Includes a Touch-Up Kit (TUK)

Opening Sizes		
Cabinet	**Top Width**	**Top Depth**
VSB242134.CG	21 1⁄16″	22 3⁄8″
VSB272134.CG	24 1⁄16″	22 3⁄8″
VSB302134.CG	27 1⁄16″	22 3⁄8″
VSB332134.CG	30 1⁄16″	22 3⁄8″
VSB362134.CG	33 1⁄16″	22 3⁄8″

Caution: For an island/peninsula installation, the CoreGuard® Sink cabinet ***must*** have a minimum of one (1) 15″ cabinet or larger installed adjacent to it in order for the island/peninsula to have adequate structural stability. Accessories ***cannot*** be installed on end panels, back or floor of the cabinet

Vanity Cabinet Full-Height Door

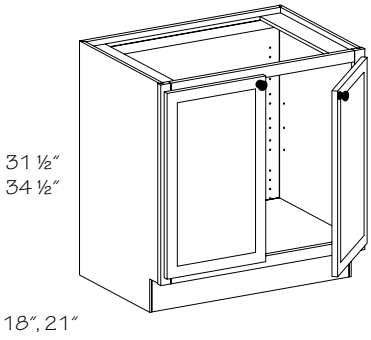

Specify R or L
31 1/2″ High, 18″ Deep

VC181831 R or L
❍ **VC241831**
VC271831
VC301831
VC331831
VC361831
◆ **VC391831**

31 1/2″ High, 21″ Deep

VC182131 R or L
❍ **VC242131**
VC272131
VC302131
VC332131
VC362131
◆ **VC392131**

Specify R or L
34 1/2″ High, 18″ Deep

VC181834 R or L
❍ **VC241834**
VC271834
VC301834
VC331834
VC361834
◆ **VC391834**
■ **VC421834**
★ ▲**VC481834**

34 1/2″ High, 21″ Deep

VC182134 R or L
❍ **VC242134**
VC272134
VC302134
VC332134
VC362134
◆ **VC392134**
■ **VC422134**
★ ▲**VC482134**

- Full-height door
- No shelf

☆ Operational End (OE) is ***not*** available with Reduced Depth (RD) options

● PE	ID
● APC	● CH
● APFC	IF
● FPEB	TWR
● MI	● WR
● DE	● XS
☆ OE	☆ GD
● AD_E	● RTK
☆ CW	● VTK
● RD	● TKD

❍ Change Width (CW) option ***not*** available
◆ 3″ center stile
■ Factory installed Roll-out Trays (ROT) are ***not*** available
▲ Two pair of butt doors
★ Glass inserts ***not*** available on ends

Vanity Base Single Door

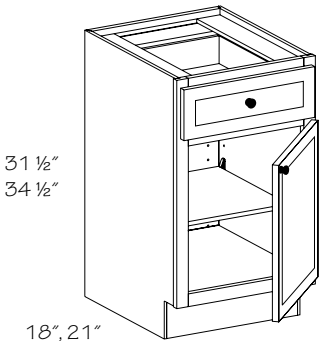

Specify R or L 31 1/2" High, 18" Deep	*Specify R or L 34" 1/2 High, 18" Deep*
❍ **VB121831 R or L**	❍ **VB121834 R or L**
VB151831 R or L	**VB151834 R or L**
VB181831 R or L	**VB181834 R or L**
VB211831 R or L	**VB211834 R or L**
31 1/2" High, 21" Deep	*34 1/2" High, 21" Deep*
❍ **VB122131 R or L**	❍ **VB122134 R or L**
VB152131 R or L	**VB152134 R or L**
VB182131 R or L	**VB182134 R or L**
VB212131 R or L	**VB212134 R or L**

- One standard drawer
- One adjustable shelf
- Scoop Top Drawer (STDW) option available
- ☆ Operational End (OE) is ***not*** available with Reduced Depth (RD) options

❍ Change Width (CW) option ***not*** available

● PE	ID
● APC	● CH
● APFC	● IF
● FPEB	● TWR
● MI	● WR
● DE	● XS
☆ OE	● GD
● AD_E	● RTK
☆ CW	● VTK
● RD	● TKD

Vanity Base Double Door

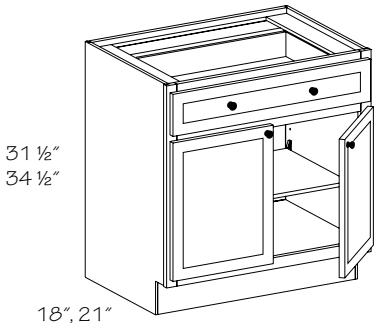

31 1/2" High, 18" Deep	*34 1/2" High, 18" Deep*
❍ **VB241831**	❍ **VB241834**
VB271831	**VB271834**
VB301831	**VB301834**
VB331831	**VB331834**
VB361831	**VB361834**
31 1/2" High, 21" Deep	*34 1/2" High, 21" Deep*
❍ **VB242131**	❍ **VB242134**
VB272131	**VB272134**
VB302131	**VB302134**
VB332131	**VB332134**
VB362131	**VB362134**

- One adjustable shelf
- One standard drawer
- Scoop Top Drawer (STDW) option available
- ☆ Operational End (OE) is ***not*** available with Reduced Depth (RD) options

❍ Change Width (CW) option ***not*** available

● PE	ID
● APC	● CH
● APFC	● IF
● FPEB	● TWR
● MI	● WR
● DE	● XS
☆ OE	● GD
● AD_E	● RTK
☆ CW	● VTK
● RD	● TKD

Vanity Drawer Base Angle Three Drawer

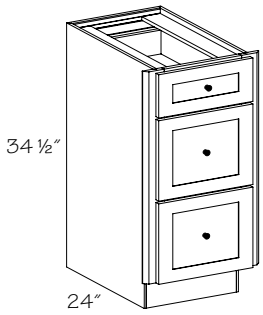

VDA332134 ▪3

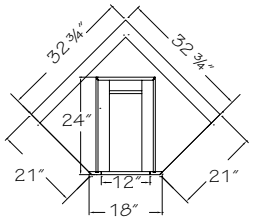

All dimensions are to outside of frame

- Angled frame designed for diagonal corner installation only
- Scoop Top Drawer (STDW) option available

● PE	ID
● APC	CH
● APFC	IF
● FPEB	● TWR
MI	WR
DE	XS
OE	GD
AD_E	RTK
CW	● VTK
RD	TKD

Vanity Drawer Base Angle Four Drawer

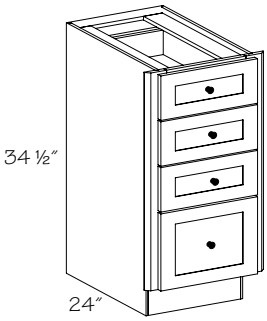

VDA332134 ▪4

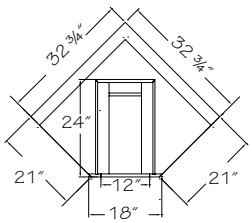

All dimensions are to outside of frame

- Angled frame designed for diagonal corner installation only
- Scoop Top Drawer (STDW) option available

● PE	ID
● APC	CH
● APFC	IF
● FPEB	● TWR
MI	WR
DE	XS
OE	GD
AD_E	RTK
CW	● VTK
RD	TKD

Vanity Base Blind Corner Cabinet Information

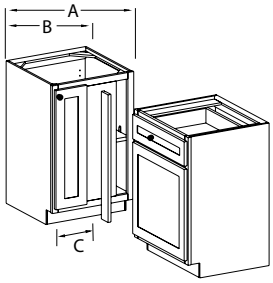

- R or L indicates blind
- All vanity blind corner cabinets ***must*** be pulled. Consult chart or pull dimensions and minimum wall space requirements
- Door hinged on same side as blind on single door cabinets
- A 3" vanity filler is included with each VBBC cabinet ordered, shipped separately. Vanity cabinet adjacent to VBBC may be ordered with an extended stile in lieu of installing supplied filler
- Overlay Panel for Wall Blind Corner Cabinet (OPWBC) is recommended for full overlay door styles and ***must*** be ordered separately; see Base Accessories Section of this book
- Right blind shown

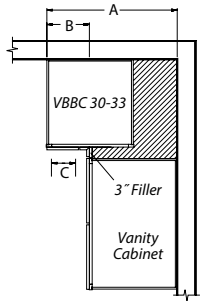

Cabinet	½" Overlay						Full Overlay					
	Wall Space "A"		Exposed Front "B"		Door Open	Cab. Width	Wall Space "A"		Exposed Front "B"		Door Open	Cab. Width
	Min ✣	Max.	Min ✣	Max	C		Min ✣	Max	Min ✣	Max	C	
VBBC 3018	28 ½"	32 ⅛"	10 ½"	13 ⅛"	6"	18"	30"	32 ⅛"	12"	13 ⅛"	6"	18"
VBBC 33	31 ½"	37 ⅛"	10 ½"	16 ⅛"	6"	21"	33"	38 ⅝"	12"	17 ⅞"	6"	21"

✣ Dimensions "A" and "B" minimum requirements include optional decorative hardware clearance. You may deduct 1 1/4" if hardware is not used.

Vanity Base Blind Corner

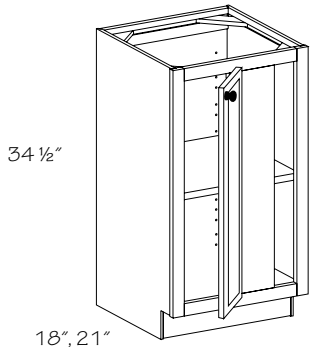

Specify R or L
18" Deep

❊ **VBBC301834 R or L**

21" Deep

VBBC332134 R or L

❊ Vanderbilt doors will have a solid, recessed flat panel

- R or L indicates blind
- Door is hinged from blind panel
- Right blind shown
- One adjustable shelf
- 3" filler included

● PE	ID
● APC	● CH
● APFC	IF
● FPEB	TWR
● MI	● WR
● DE	● XS
OE	GD
● AD_E	● RTK
CW	● VTK
● RD	TKD

Vanity Easy Reach

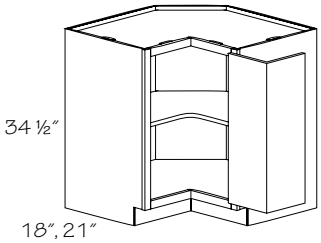

Specify R or L
18" Deep

◆■**VEZR271834 R or L**
VEZR301834 R or L

Specify R or L
21" Deep

◆■**VEZR302134 R or L**
VEZR332134 R or L

◆ Vanderbilt doors will have a solid, recessed flat panel. Courtney doors will have a veneer, recessed flat panel

■ Wood-Grain Foil door styles will be supplied as vertical grain slabs

- One fixed shelf
- Doors are profiled on one long and two short edges and are connected with hinges
- Angled back provides clearance for installation
- Contrasting Back Options (CBEB, CPLB, CVGR) ***not*** available
- ***Note:*** Does ***not*** include Soft-Close feature

● PE	ID
● APC	● CH
● APFC	IF
● FPEB	TWR
● MI	● WR
DE	● XS
OE	GD
● AD_E	● RTK
CW	● VTK
RD	TKD

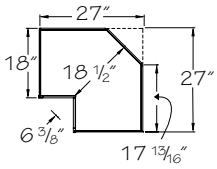

VEZR271834

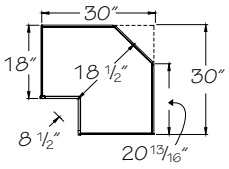

VEZR301834

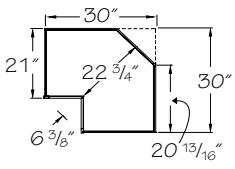

VEZR302134

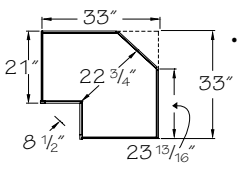

VEZR332134

Vanity Easy Reach Wood Lazy Susan

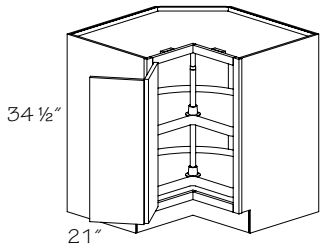

Specify R or L

VEZR332134 R or L-WLS

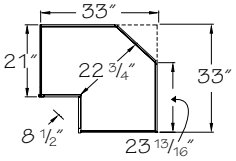

VEZR332134

●	PE		ID
●	APC		CH
●	APFC		IF
●	FPEB		TWR
●	MI	●	WR
	DE	●	XS
	OE		GD
●	AD_E	●	RTK
	CW	●	VTK
	RD		TKD

- Two pie-cut 28″ diameter rotating shelves
- Angled back provides clearance for installation
- Doors are profiled on one long and two short edges and are connected with hinges
- Face frame is scooped for hinge installation on full overlay door styles
- Vanderbilt doors will have a solid, recessed flat panel
- Back Options (BEB and VGRB) ***not*** available
- Contrasting Back Options (CBEB, CPLB, CVGR) ***not*** available
- ***Note:*** Does ***not*** include Soft-Close feature

Vanity Base Drawer

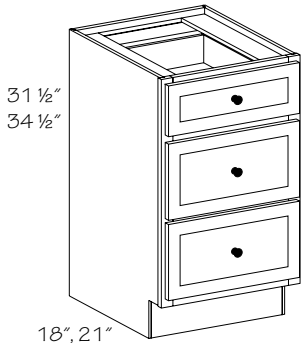

31 1/2″ High, 18″ Deep

❍ **VBD121831 ▪3**
VBD151831 ▪3
VBD181831 ▪3

31 1/2″ High, 21″ Deep

❍ **VBD122131 ▪3**
VBD152131 ▪3
VBD182131 ▪3

34 1/2″ High, 18″ Deep

❍ **VBD121834 ▪3**
VBD151834 ▪3
VBD181834 ▪3
VBD211834 ▪3
VBD241834 ▪3
▲ **VBD271834 ▪3**
▲ VBD301834 ▪3
▲ VBD331834 ▪3
▲ VBD361834 ▪3

34 1/2″ High, 21″ Deep

❍ **VBD122134 ▪3**
VBD152134 ▪3
VBD182134 ▪3
VBD212134 ▪3
VBD242134 ▪3
▲ **VBD272134 ▪3**
▲ VBD302134 ▪3
▲ VBD332134 ▪3
▲ VBD362134 ▪3

❍ Change Width (CW) option ***not*** available

▲ Not available with Vanity Wood Tiered Drawer Storage (VWTDS), Vanity Shallow Wood Tiered Drawer Storage (VSWTDS) and Vanity Adjustable Drawer Divider (VADD)

Grey color coding indicates new product, size or code.

●	PE		ID
●	APC		CH
●	APFC		IF
●	FPEB	●	TWR
	MI	●	WR
●	DE	●	XS
	OE		GD
●	AD_E	●	RTK
☆	CW	●	VTK
●	RD	●	TKD

- One standard drawer
- Two deep drawers
- Optional Vanity Wood Tiered Drawer Storage (VWTDS), Vanity Shallow Wood Tiered Drawer Storage (VSWTDS) and Vanity Adjustable Drawer Divider (VADD) are available
- Scoop Top Drawer (STDW) option available

Vanity Base Four Drawer

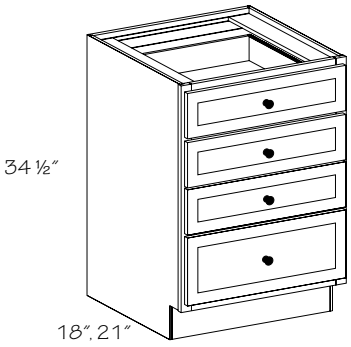

18″ Deep

❍ **VBD121834 ▪4**
VBD151834 ▪4
VBD181834 ▪4
VBD211834 ▪4
VBD241834 ▪4
▲ VBD271834 ▪4
▲ VBD301834 ▪4
▲ VBD331834 ▪4
▲ VBD361834 ▪4

21″ Deep

❍ **VBD122134 ▪4**
VBD152134 ▪4
VBD182134 ▪4
VBD212134 ▪4
VBD242134 ▪4
▲ VBD272134 ▪4
▲ VBD302134 ▪4
▲ VBD332134 ▪4
▲ VBD362134 ▪4

❍ Change Width (CW) option ***not*** available

▲ Not available with Vanity Wood Tiered Drawer Storage (VWTDS), Vanity Shallow Wood Tiered Drawer Storage (VSWTDS) and Vanity Adjustable Drawer Divider (VADD)

Grey color coding indicates new product, size or code.

●	PE		ID
●	APC		CH
●	APFC		IF
●	FPEB	●	TWR
	MI	●	WR
●	DE	●	XS
	OE		GD
●	AD_E	●	RTK
☆	CW	●	VTK
●	RD	●	TKD

- Three standard height drawers
- One deep drawer
- Optional Vanity Wood Tiered Drawer Storage (VWTDS), Vanity Shallow Wood Tiered Drawer Storage (VSWTDS) and Vanity Adjustable Drawer Divider (VADD) are available
- Scoop Top Drawer (STDW) option available

Vanity Knee Drawer

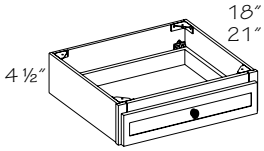

VKD24-33

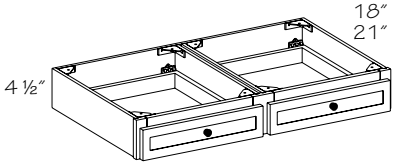

VKD36

18″ Deep

VKD2418
VKD2718
VKD3018
VKD3318
▲ **VKD3618**

21″ Deep

VKD2421
VKD2721
VKD3021
VKD3321
▲ **VKD3621**

▲ Two drawers side by side

☆	PE		ID
●	APC		CH
	APFC		IF
	FPEB		TWR
	MI		WR
	DE	●	XS
	OE		GD
	AD_E		RTK
	CW		VTK
●	RD		TKD

- Unit is designed for use between two Vanity cabinets
- Drawer will be slab, including DRPD, except Lasalle, Lyndale and Mandolay door styles which will be five-piece
- ***Not*** trimmable

☆ End panels are 1/2″ plywood with Natural Birch Viraguard interior and exterior

Vanity Filler Pull-out

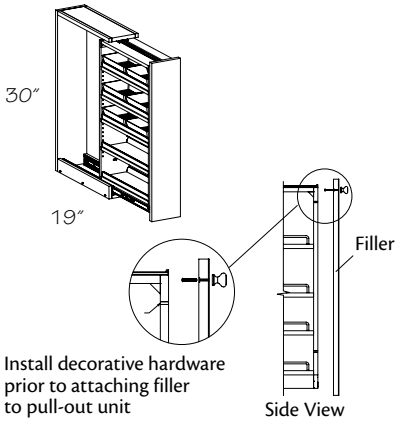

VFP32130
VFP62130

- Four adjustable shelves, one fixed shelf
- Includes six clear plastic trays; replacements available. See Vanity Accessories section of this book
- Unit slides on full extension side-mount runners
- Crafted or Quartersawn door styles will be supplied in plain sawn wood
- Painted hardwood supplied for EverCore™
- Painted or Stained hardwood supplied for Wood-Grain Foil door styles
- Recommended installation is between two cabinets
- Installation may also be made between a cabinet and a wall or a cabinet and an end panel with stile
- Filler is included, but unattached. Unit should be installed before removing shipping brace and attaching filler
- A filler overlay is recommended for full overlay door styles; ***must*** be ordered separately
- No toe kick

PE	ID
APC	CH
APFC	IF
FPEB	TWR
MI	WR
DE	XS
OE	GD
AD_E	RTK
CW	VTK
RD	TKD

Vanity Base Pull-out

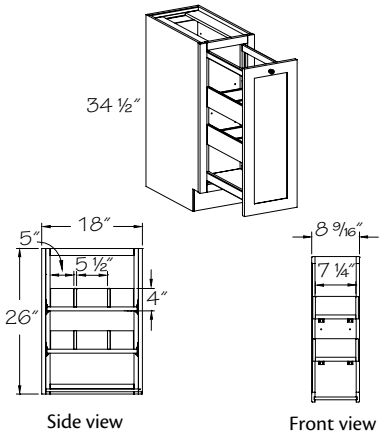

VBP122134 7 1/4" shelf width

- One fixed wood shelf attached to the bottom of a full-height door
- Two adjustable shelves
- Two removable dividers in each adjustable shelf
- Unit slides on heavy duty full extension runners with integrated buffer

● PE	ID
● APC	CH
● APFC	IF
● FPEB	TWR
● MI	● WR
● DE	● XS
OE	GD
● AD_E	● RTK
CW	● VTK
RD	● TKD

Vanity Base Pull-out Appliance

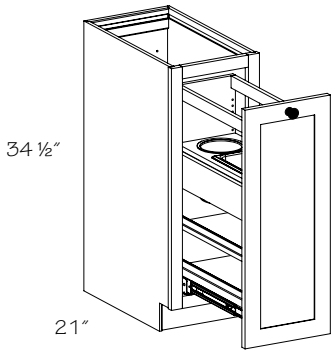

VPOA122134

- One fixed wood shelf attached to the bottom of a full-height door
- Two adjustable shelves
- Unit slides on full extension side-mount runners
- Includes two metal trays for curling irons, hair dryers, etc

● PE	ID
● APC	CH
● APFC	IF
● FPEB	TWR
● MI	● WR
DE	● XS
OE	GD
● AD_E	● RTK
CW	● VTK
RD	● TKD

Vanity Base Top Mount Wastebasket–Double

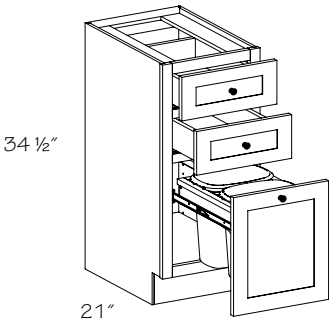

VBWBT152134
With Sidemount Soft-Close
VBWBT152134 •SC

- 10 qt. capacity baskets
- Basket(s) are easily removable for emptying or cleaning
- Basket(s) rest in a Natural Maple plywood frame
- Two standard drawers
- Frame slides on full extension glides
- Optional Wastebasket Drawer Partition (WDP) is available

● PE	ID
● APC	CH
● APFC	● IF
● FPEB	● TWR
MI	● WR
● DE	● XS
OE	GD
● AD_E	● RTK
CW	● VTK
RD	● TKD

Vanity Base Hamper Top Mount

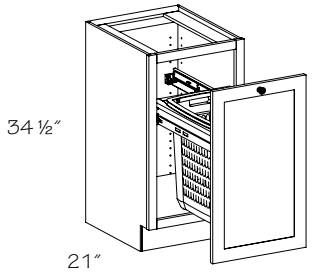

VHBT182134

- Hamper is mold and mildew resistant white plastic
- Hamper is easily removable for emptying or cleaning
- Hamper has lid
- Frame slides on extra-extended full extension glides
- Hamper Dimensions: 14″ W x 18 1/4″ H x 18 5/8″ D

●	PE		ID
●	APC		CH
	APFC		IF
●	FPEB		TWR
	MI	●	WR
	DE	●	XS
	OE		GD
●	AD_E	●	RTK
	CW	●	VTK
	RD	●	TKD

Vanity Hamper Base

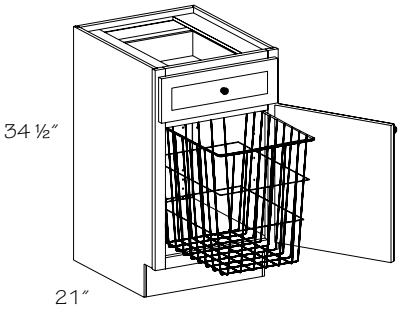

Specify R or L

VHB152134 R or L
VHB182134 R or L

- One standard drawer
- Epoxy coated pull-out hamper
- Hamper Dimensions:
  11″ W x 17″ H x 19″ D (15″ base)
  14″ W x 17″ H x 19″ D (18″ base)

●	PE		ID
●	APC		CH
●	APFC	●	IF
●	FPEB	●	TWR
●	MI	●	WR
	DE	●	XS
	OE		GD
●	AD_E	●	RTK
	CW	●	VTK
	RD	●	TKD

Vanity Hamper Linen Cabinet 88 1/2″ H

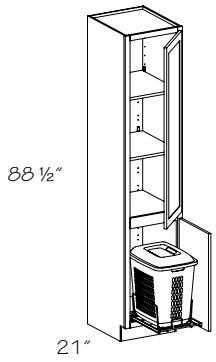

Specify R or L

VHLC182188 R or L

- Two adjustable, full-depth shelves
- Removable hamper
- Hamper is mold and mildew resistant white plastic
- Hamper has lid
- Hamper slides on full extension glides
- Hamper Dimensions: 14″ W x 18 1/4″ H x 18 5/8″ D
- ***Not*** available in mitered Wood-Grain Foil door styles

●	PE		ID
●	APC		CH
●	APFC		IF
●	FPEB		TWR
●	MI	●	WR
	DE	●	XS
	OE	●	GD
●	AD_E	●	RTK
●	CW	●	VTK
	RD	●	TKD

Vanity Hamper Linen Cabinet Top Mount 88 1/2″ H

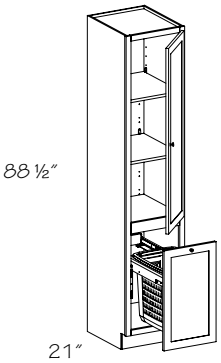

Specify R or L

VHLCT182188 R or L

- Two adjustable, full-depth shelves
- Hamper is mold and mildew resistant white plastic
- Hamper is easily removable for emptying or cleaning
- Hamper has lid
- Frame slides on extra-extended full extension glides
- Hamper Dimensions: 14″ W x 18 1/4″ H x 18 5/8″ D
- ***Not*** available in mitered Wood-Grain Foil door styles

●	PE		ID
●	APC		CH
●	APFC		IF
●	FPEB		TWR
●	MI	●	WR
●	DE	●	XS
	OE	●	GD
●	AD_E	●	RTK
	CW	●	VTK
	RD	●	TKD

Vanity Linen Cabinet Top Mount Wastebasket-Double 88 1/2" H

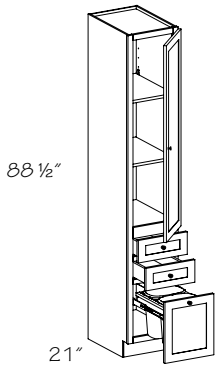

Specify R or L

VLCWBT152188 R or L•2

- Two adjustable, full-depth shelves
- Two standard drawers
- 10 qt. capacity baskets
- Basket(s) rest in a Natural Maple plywood frame
- Basket(s) are easily removable for emptying or cleaning
- Frame slides on full extension glides
- Optional Wastebasket Drawer Partition (WDP) is available
- ***Not*** available in mitered Wood-Grain Foil door styles

●	PE		ID
●	APC		CH
●	APFC		IF
●	FPEB		TWR
●	MI	●	WR
●	DE	●	XS
	OE	●	GD
●	AD_E	●	RTK
	CW	●	VTK
	RD	●	TKD

Vanity Linen Cabinet 88 1/2" H

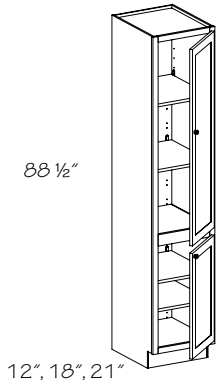

Specify R or L
12" Deep

† **VLC151288 R or L**
† **VLC181288 R or L**
† **VLC211288 R or L**

18" Deep

VLC151888 R or L
VLC181888 R or L
VLC211888 R or L

21" Deep

VLC152188 R or L
VLC182188 R or L
VLC212188 R or L

† Toe Kick Drawer (TKD) option ***not*** available

- Four adjustable shelves
- ***Not*** available in mitered Wood-Grain Foil door styles

☆ Operational End (OE) is ***not*** available with Reduced Depth (RD) options

☆ Glass inserts not available Top and Bottom, Top and Bottom and End, Top and Bottom and Ends Both

●	PE		ID
●	APC		CH
●	APFC	●	IF
●	FPEB		TWR
●	MI	●	WR
●	DE	●	XS
☆	OE	☆	GD
●	AD_E	●	RTK
	CW	●	VTK
●	RD	●	TKD

Vanity Linen Towel Storage

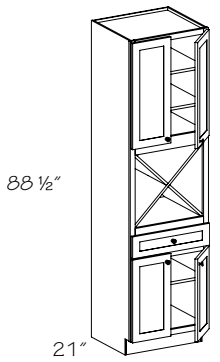

VTL242188

- One full-depth shelf in lower section
- Two full-depth shelves in upper section
- One standard drawer
- ***Not*** available in mitered Wood-Grain Foil door styles

	PE		ID
❖	APC		CH
●	APFC		IF
	FPEB		TWR
❖	MI	●	WR
	DE	●	XS
	OE	●	GD
●	AD_E	●	RTK
	CW	●	VTK
	RD	●	TKD

Vanity Linen Cabinet Deluxe Roll-out Tray (2)

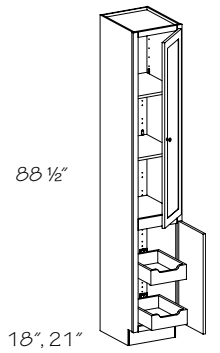

Specify R or L
18" Deep

VLC151888 R or L•2DXROT
VLC181888 R or L•2DXROT
VLC211888 R or L•2DXROT

21" Deep

VLC152188 R or L•2DXROT
VLC182188 R or L•2DXROT
VLC212188 R or L•2DXROT

- Two adjustable shelves in upper section
- Roll-out Trays (ROT) are 4" deep, 5/8" solid wood dovetailed sides with 3/16" plywood bottom, notched front and full extension runners with integrated buffer
- ***Not*** available in mitered Wood-Grain Foil door styles

☆ Glass doors available for top doors only

●	PE		ID
●	APC		CH
●	APFC		IF
●	FPEB		TWR
●	MI	●	WR
●	DE	●	XS
	OE	☆	GD
●	AD_E	●	RTK
●	CW	●	VTK
●	RD	●	TKD

Vanity Linen Cabinet Deluxe Roll-out Tray (3)

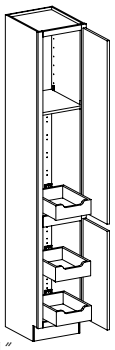

Specify R or L
18″ Deep

VLC151888 R or L•3DXROT
VLC181888 R or L•3DXROT
VLC211888 R or L•3DXROT

21″ Deep

VLC152188 R or L•3DXROT
VLC182188 R or L•3DXROT
VLC212188 R or L•3DXROT

- One adjustable full-depth shelf in upper section
- Roll-out Trays (ROT) are 4″ deep, 5/8″ solid wood dovetailed sides with 3/16″ plywood bottom, notched front and full extension runners with integrated buffer
- ***Not*** available in mitered Wood-Grain Foil door styles

☆ Glass doors available for top doors only

●	PE		ID
●	APC		CH
●	APFC		IF
●	FPEB		TWR
●	MI	●	WR
●	DE	●	XS
	OE	☆	GD
●	AD_E	●	RTK
●	CW	●	VTK
●	RD	●	TKD

Vanity Linen Cabinet Three Drawer

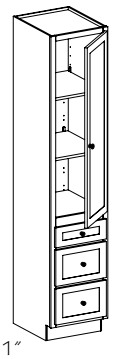

Specify R or L
18″ Deep

VLC151888 R or L•3
VLC181888 R or L•3

21″ Deep

VLC152188 R or L•3
VLC182188 R or L•3

- Two adjustable shelves in upper section
- One standard drawer
- Two deep drawers
- Optional Vanity Wood Tiered Drawer Storage (VWTDS), Vanity Shallow Wood Tiered Drawer Storage (VSWTDS) and Vanity Adjustable Drawer Divider (VADD) are available
- ***Not*** available in mitered Wood-Grain Foil door styles

●	PE		ID
●	APC		CH
●	APFC		IF
●	FPEB		TWR
●	MI	●	WR
●	DE	●	XS
	OE	●	GD
●	AD_E	●	RTK
●	CW	●	VTK
●	RD	●	TKD

Vanity Linen Cabinet Four Drawer

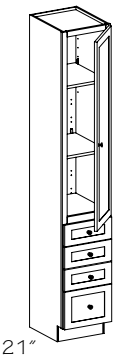

Specify R or L
18″ Deep

VLC151888 R or L•4
VLC181888 R or L•4

21″ Deep

VLC152188 R or L•4
VLC182188 R or L•4

- Two adjustable shelves in upper section
- Three standard height drawers
- One deep drawer
- Optional Vanity Wood Tiered Drawer Storage (VWTDS), Vanity Shallow Wood Tiered Drawer Storage (VSWTDS) and Vanity Adjustable Drawer Divider (VADD) are available
- ***Not*** available in mitered Wood-Grain Foil door styles

●	PE		ID
●	APC		CH
●	APFC		IF
●	FPEB		TWR
●	MI	●	WR
●	DE	●	XS
	OE	●	GD
●	AD_E	●	RTK
●	CW	●	VTK
●	RD	●	TKD

Vanity Linen Short Two Drawer

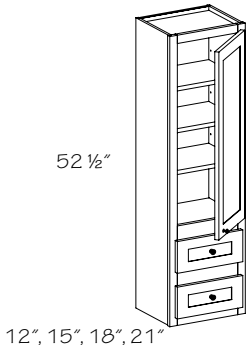

Specify R or L
12″ Deep

VLC151252 R or L•2

15″ Deep

VLC151552 R or L•2

18″ Deep

VLC151852 R or L•2

21″ Deep

VLC152152 R or L•2

- Three adjustable shelves in upper section(s)
- Two standard drawers

●	PE		ID
●	APC		CH
●	APFC		IF
●	FPEB		TWR
●	MI		WR
●	DE	●	XS
	OE	●	GD
	AD_E		RTK
●	CW		VTK
●	RD		TKD

Vanity Linen Short Three Drawer

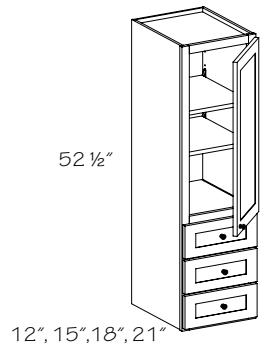

Specify R or L
12″ Deep
VLC151252 R or L-3
15″ Deep
VLC151552 R or L-3
18″ Deep
VLC151852 R or L-3
21″ Deep
VLC152152 R or L-3

- Two adjustable shelves in upper section
- Three standard height drawers

●	PE		ID
●	APC		CH
●	APFC		IF
●	FPEB		TWR
●	MI		WR
●	DE	●	XS
	OE	●	GD
	AD_E		RTK
●	CW		VTK
●	RD		TKD

Vanity Vertical Lift Door Wall Cabinet

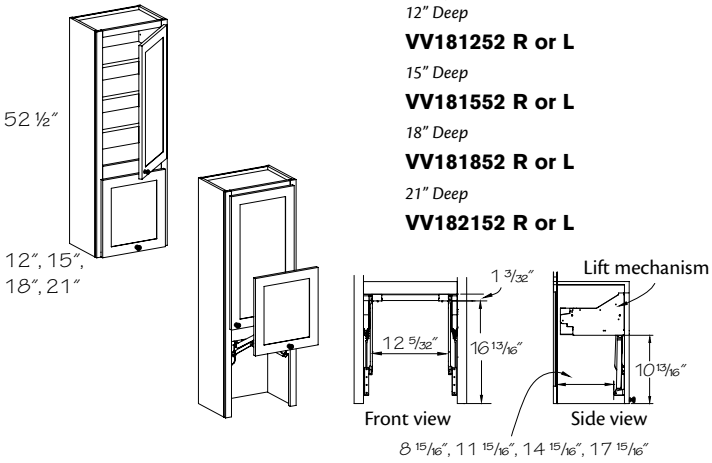

Specify R or L
12″ Deep
VV181252 R or L
15″ Deep
VV181552 R or L
18″ Deep
VV181852 R or L
21″ Deep
VV182152 R or L

- Three adjustable shelves in upper section(s)
- Clearance from countertop to bottom of door is 20 1/32″
- Bottom door is always square
- Shelves shipped separately
- Void All Door and Drawer Front option (VDA) is ***not*** available

☆ Glass doors available for top doors only
☆ Minimum Reduced Depth (RD) is 12″

●	PE		ID
●	APC	●	CH
●	APFC		IF
●	FPEB		TWR
●	MI		WR
●	DE	●	XS
	OE	☆	GD
	AD_E		RTK
	CW		VTK
☆	RD		TKD

Vanity Linen Cabinet 48" H

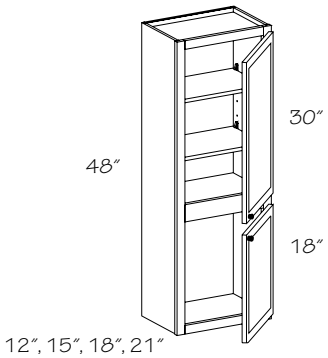

Specify R or L
12″ Deep
VLC151248 R or L
VLC181248 R or L
15″ Deep
VLC151548 R or L
VLC181548 R or L
18″ Deep
VLC151848 R or L
VLC181848 R or L
21″ Deep
VLC152148 R or L
VLC182148 R or L

- Two adjustable shelves in upper section
- Bottom door is always square

☆ Operational End (OE) is ***not*** available with Reduced Depth (RD) options

●	PE		ID
●	APC		CH
●	APFC	●	IF
●	FPEB		TWR
●	MI		WR
●	DE	●	XS
☆	OE	●	GD
	AD_E		RTK
●	CW		VTK
●	RD		TKD

Vanity Utility Cabinet 18" Deep

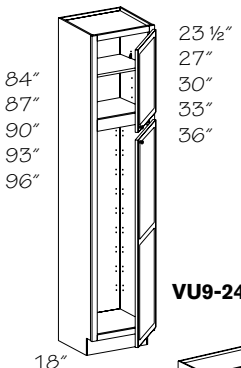

VU9-24

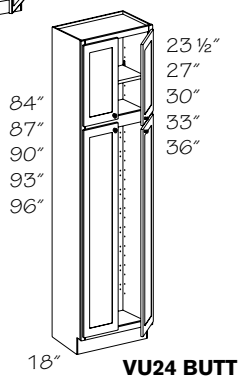

VU24 BUTT - VU27 BUTT

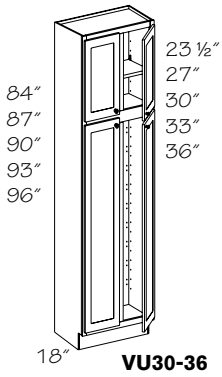

VU30-36

Specify R or L
84" High

❄❍†☆**VU91884 R or L**
VU121884 R or L
VU151884 R or L
VU181884 R or L
VU211884 R or L
VU241884 R or L
❍❐ **VU241884 BUTT**
VU271884 (Butt)
VU301884 BUTT
VU331884 BUTT
VU361884 BUTT

87" High

❄❍†☆**VU91887 R or L**
VU121887 R or L
VU151887 R or L
VU181887 R or L
VU211887 R or L
VU241887 R or L
❍❐ **VU241887 BUTT**
VU271887 (Butt)
VU301887 BUTT
VU331887 BUTT
VU361887 BUTT

90" High

❄❍†☆**VU91890 R or L**
VU121890 R or L
VU151890 R or L
VU181890 R or L
VU211890 R or L
VU241890 R or L
❍❐ **VU241890 BUTT**
VU271890 (Butt)
VU301890 BUTT
VU331890 BUTT
VU361890 BUTT

Specify R or L
93" High

❄❍☆**VU91893 R or L**
VU121893 R or L
VU151893 R or L
VU181893 R or L
VU211893 R or L
VU241893 R or L
❍❐ **VU241893 BUTT**
VU271893 (Butt)
VU301893 BUTT
VU331893 BUTT
VU361893 BUTT

96" High

❄❍☆**VU91896 R or L**
VU121896 R or L
VU151896 R or L
VU181896 R or L
VU211896 R or L
VU241896 R or L
❍❐ **VU241896 BUTT**
VU271896 (Butt)
VU301896 BUTT
VU331896 BUTT
VU361896 BUTT

❄ Doors are square except full overlay arch door styles. Thermofoil door styles will always be square. Vanderbilt doors will have a solid, recessed flat panel
❍ Change Width (CW) option ***not*** available
† Toe Kick Drawer (TKD) option ***not*** available
❐ Change Height (CH) option ***not*** available
☆ Glass Door (GD) option ***not*** available

●	PE		ID
●	APC	☆	CH
●	APFC	☆	IF
●	FPEB		TWR
●	MI	☆	WR
●	DE	●	XS
☆	OE	☆	GD
●	AD_E	☆	RTK
☆	CW	☆	VTK
●	RD	☆	TKD

- Includes adjustable shelves in upper section: 84" & 87" high—one shelf; 90" & 93" high—two shelves; 96" high—three shelves
- Factory installed Roll-out Trays (ROT) are ***not*** available on Utility Cabinets wider than 24"
- Toe kick is shipped separately on 93" & 96" high cabinets

☆ When Inverted Frame (IF) is chosen in arched door styles, VU18, VU24, VU24BUTT and VU36 cabinets will have arched doors. All other cabinet sizes will be supplied with square doors

☆ Operational End (OE) is ***not*** available with Increased Depth (ID) or Reduced Depth (RD) options

☆ Toe Kick Drawer (TKD), Wide Bottom Rail (WR) and Recessed Toe Kick (RTK) ***not*** available on 93" & 96" high cabinets

☆ Void Toe Kick (VTK) is ***not*** available on 93" and 96" high cabinets

☆ Glass on top and bottom - select glass designs only

- ***Note:*** Shelf Kit (SK) for lower section ***must*** be ordered separately; see Shelving section of this book



Remember to order a 3/16" skin (WSK) for the exposed ends of 93" & 96" high cabinets to conceal the seam between the loose toe kick and the cabinet.

Vanity Utility Cabinet 21" Deep

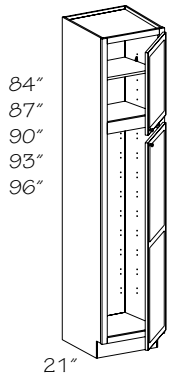

VU9-24

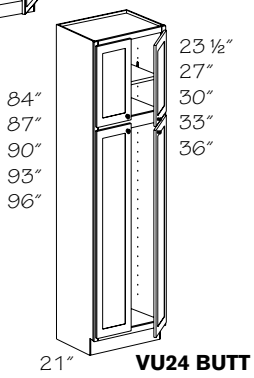

VU24 BUTT - VU27 BUTT

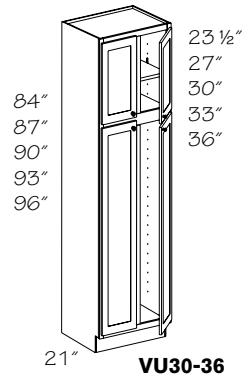

VU30-36

	Specify R or L 84" High	*Specify R or L 93" High*
❇❍†☆	**VU92184 R or L**	**VU92193 R or L**
	VU122184 R or L	**VU122193 R or L**
	VU152184 R or L	**VU152193 R or L**
	VU182184 R or L	**VU182193 R or L**
	VU212184 R or L	**VU212193 R or L**
	VU242184 R or L	**VU242193 R or L**
❍❒	**VU242184 BUTT**	**VU242193 BUTT**
	VU272184 (Butt)	**VU272193 (Butt)**
	VU302184 BUTT	**VU302193 BUTT**
	VU332184 BUTT	**VU332193 BUTT**
	VU362184 BUTT	**VU362193 BUTT**
	87" High	*96" High*
❇❍†☆	**VU92187 R or L**	**VU92196 R or L**
	VU122187 R or L	**VU122196 R or L**
	VU152187 R or L	**VU152196 R or L**
	VU182187 R or L	**VU182196 R or L**
	VU212187 R or L	**VU212196 R or L**
	VU242187 R or L	**VU242196 R or L**
❍❒	**VU242187 BUTT**	**VU242196 BUTT**
	VU272187 (Butt)	**VU272196 (Butt)**
	VU302187 BUTT	**VU302196 BUTT**
	VU332187 BUTT	**VU332196 BUTT**
	VU362187 BUTT	**VU362196 BUTT**
	90" High	
❇❍†☆	**VU92190 R or L**	
	VU122190 R or L	
	VU152190 R or L	
	VU182190 R or L	
	VU212190 R or L	
	VU242190 R or L	
❍❒	**VU242190 BUTT**	
	VU272190 (Butt)	
	VU302190 BUTT	
	VU332190 BUTT	
	VU362190 BUTT	

❇ Doors are square except full overlay arch door styles. Thermofoil door styles will always be square. Vanderbilt doors will have a solid, recessed flat panel

❍ Change Width (CW) option ***not*** available

† Toe Kick Drawer (TKD) option ***not*** available

❒ Change Height (CH) option ***not*** available

☆ Glass Door (GD) option ***not*** available

●	PE	☆	ID
●	APC	☆	CH
●	APFC	☆	IF
●	FPEB		TWR
●	MI	☆	WR
●	DE	●	XS
☆	OE	☆	GD
●	AD_E	☆	RTK
☆	CW	☆	VTK
☆	RD	☆	TKD

- Factory installed Roll-out Trays (ROT) are ***not*** available on Utility Cabinets wider than 24″
- Toe kick is shipped separately on 93″ & 96″ high cabinets

☆ When Inverted Frame (IF) is chosen in arched door styles, VU18, VU24, VU24BUTT and VU36 cabinets will have arched doors. All other cabinet sizes will be supplied with square doors

☆ Operational End (OE) is ***not*** available with Increased Depth (ID) or Reduced Depth (RD) options

☆ Maximum Increased Depth (ID) is 24″

☆ Toe Kick Drawer (TKD), Wide Bottom Rail (WR) and Recessed Toe Kick (RTK) ***not*** available on 93″ & 96″ high cabinets

☆ Void Toe Kick (VTK) is ***not*** available on 93″ and 96″ high cabinets

☆ Glass on top and bottom - select glass designs only

- ***Note:*** Shelf Kit (SK) for lower section ***must*** be ordered separately; see Shelving section of this book

Remember to order a 3/16" skin (WSK) for the exposed ends of 93" & 96" high cabinets to conceal the seam between the loose toe kick and the cabinet.

Vanity Utility Cabinet 18" Deep w/Deluxe Dovetailed Roll-out Tray

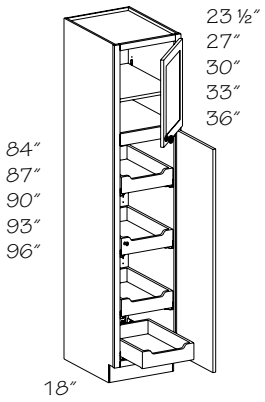

VU15-24

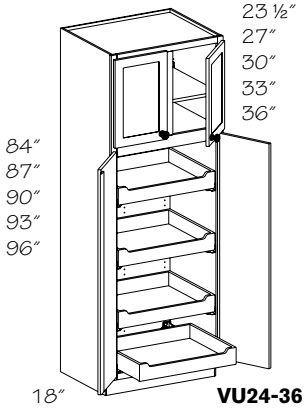

VU24-36

Specify R or L
84" High

VU151884 R or L▪4DXROT
VU181884 R or L▪4DXROT
VU211884 R or L▪4DXROT
VU241884 R or L▪4DXROT
❍❐**VU241884 BUTT▪4DXROT**
VU271884 (Butt)▪4DXROT
VU301884 BUTT▪4DXROT
VU331884 BUTT▪4DXROT
VU361884 BUTT▪4DXROT

87" High

VU151887 R or L▪4DXROT
VU181887 R or L▪4DXROT
VU211887 R or L▪4DXROT
VU241887 R or L▪4DXROT
❍❐**VU241887 BUTT▪4DXROT**
VU271887 (Butt)▪4DXROT
VU301887 BUTT▪4DXROT
VU331887 BUTT▪4DXROT
VU361887 BUTT▪4DXROT

90" High

VU151890 R or L▪4DXROT
VU181890 R or L▪4DXROT
VU211890 R or L▪4DXROT
VU241890 R or L▪4DXROT
❍❐**VU241890 BUTT▪4DXROT**
VU271890 (Butt)▪4DXROT
VU301890 BUTT▪4DXROT
VU331890 BUTT▪4DXROT
VU361890 BUTT▪4DXROT

Specify R or L
93" High

VU151893 R or L▪4DXROT
VU181893 R or L▪4DXROT
VU211893 R or L▪4DXROT
VU241893 R or L▪4DXROT
❍❐**VU241893 BUTT▪4DXROT**
VU271893 (Butt)▪4DXROT
VU301893 BUTT▪4DXROT
VU331893 BUTT▪4DXROT
VU361893 BUTT▪4DXROT

96" High

VU151896 R or L▪4DXROT
VU181896 R or L▪4DXROT
VU211896 R or L▪4DXROT
VU241896 R or L▪4DXROT
❍❐**VU241896 BUTT▪4DXROT**
VU271896 (Butt)▪4DXROT
VU301896 BUTT▪4DXROT
VU331896 BUTT▪4DXROT
VU361896 BUTT▪4DXROT

❍ Change Width (CW) option ***not*** available
❐ Change Height (CH) option ***not*** available

●	PE		ID
●	APC	☆	CH
●	APFC	☆	IF
●	FPEB		TWR
●	MI	☆	WR
●	DE	●	XS
	OE	☆	GD
●	AD_E	☆	RTK
☆	CW	☆	VTK
●	RD	☆	TKD

- Four adjustable Roll-out Trays (ROT) included in lower section
- Includes adjustable shelves in upper section: 84" & 87" high—one shelf; 90" & 93" high—two shelves; 96" high—three shelves
- Roll-out Trays (ROT) shipped separately on 27"–36" wide units
- Roll-out Trays (ROT) ***cannot*** be included when a Reduced Depth (RD) option of less than 18" is selected
- 27"–36" wide units ***not*** available with Reduced Depth (RD)
- Toe kick is shipped separately on 93" & 96" high cabinets

☆ When Inverted Frame (IF) is chosen in arched door styles, VU18, VU24, VU24BUTT and VU36 cabinets will have arched doors. All other cabinet sizes will be supplied with square doors

☆ Toe Kick Drawer (TKD), Wide Bottom Rail (WR) and Recessed Toe Kick (RTK) ***not*** available on 93" & 96" high cabinets

☆ Void Toe Kick (VTK) is ***not*** available on 93" and 96" high cabinets

☆ Glass doors available for top doors only

Remember to remove the white plastic "feet" from the bottom of all tall cabinets before installation. Their sole purpose is to protect the floor after the cabinets are unboxed. Leaving them on will result in an uneven installation.

Vanity Utility Cabinet 21" Deep w/Deluxe Dovetailed Roll-out Tray

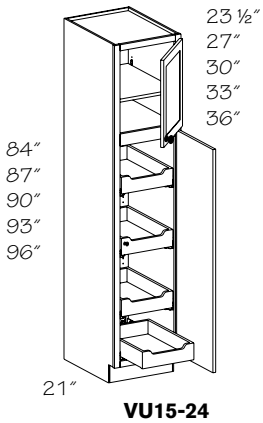

VU15-24

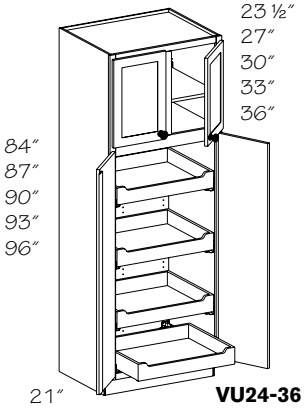

VU24-36

Specify R or L
84" High

VU152184 R or L▪4DXROT
VU182184 R or L▪4DXROT
VU212184 R or L▪4DXROT
VU242184 R or L▪4DXROT
❍❐VU242184 BUTT▪4DXROT
VU272184 (Butt)▪4DXROT
VU302184 BUTT▪4DXROT
VU332184 BUTT▪4DXROT
VU362184 BUTT▪4DXROT

87" High

VU152187 R or L▪4DXROT
VU182187 R or L▪4DXROT
VU212187 R or L▪4DXROT
VU242187 R or L▪4DXROT
❍❐VU242187 BUTT▪4DXROT
VU272187 (Butt)▪4DXROT
VU302187 BUTT▪4DXROT
VU332187 BUTT▪4DXROT
VU362187 BUTT▪4DXROT

90" High

VU152190 R or L▪4DXROT
VU182190 R or L▪4DXROT
VU212190 R or L▪4DXROT
VU242190 R or L▪4DXROT
❍❐VU242190 BUTT▪4DXROT
VU272190 (Butt)▪4DXROT
VU302190 BUTT▪4DXROT
VU332190 BUTT▪4DXROT
VU362190 BUTT▪4DXROT

93" High

VU152193 R or L▪4DXROT
VU182193 R or L▪4DXROT
VU212193 R or L▪4DXROT
VU242193 R or L▪4DXROT
❍❐VU242193 BUTT▪4DXROT
VU272193 (Butt)▪4DXROT
VU302193 BUTT▪4DXROT
VU332193 BUTT▪4DXROT
VU362193 BUTT▪4DXROT

96" High

VU152196 R or L▪4DXROT
VU182196 R or L▪4DXROT
VU212196 R or L▪4DXROT
VU242196 R or L▪4DXROT
❍❐VU242196 BUTT▪4DXROT
VU272196 (Butt)▪4DXROT
VU302196 BUTT▪4DXROT
VU332196 BUTT▪4DXROT
VU362196 BUTT▪4DXROT

❍ Change Width (CW) option ***not*** available
❐ Change Height (CH) option ***not*** available

●	PE	☆	ID
●	APC	☆	CH
●	APFC	☆	IF
●	FPEB		TWR
●	MI	☆	WR
●	DE	●	XS
	OE	☆	GD
●	AD_E	☆	RTK
☆	CW	☆	VTK
●	RD	☆	TKD

- Four adjustable Roll-out Trays (ROT) included in lower section
- Includes adjustable shelves in upper section: 84" & 87" high—one shelf; 90" & 93" high—two shelves; 96" high—three shelves
- Roll-out Trays (ROT) shipped separately on 27"–36" wide units
- Roll-out Trays (ROT) ***cannot*** be included when a Reduced Depth (RD) option of less than 18" is selected
- 27"–36" wide units ***not*** available with Reduced Depth (RD)
- Toe kick is shipped separately on 93" & 96" high cabinets

☆ Maximum Increased Depth (ID) is 24"
☆ When Inverted Frame (IF) is chosen in arched door styles, VU18, VU24, VU24BUTT and VU36 cabinets will have arched doors. All other cabinet sizes will be supplied with square doors
☆ Toe Kick Drawer (TKD), Wide Bottom Rail (WR) and Recessed Toe Kick (RTK) ***not*** available on 93" & 96" high cabinets
☆ Void Toe Kick (VTK) is ***not*** available on 93" and 96" high cabinets
☆ Glass doors available for top doors only

Remember to remove the white plastic "feet" from the bottom of all tall cabinets before installation. Their sole purpose is to protect the floor after the cabinets are unboxed. Leaving them on will result in an uneven installation.

Vanity Wall Cabinet

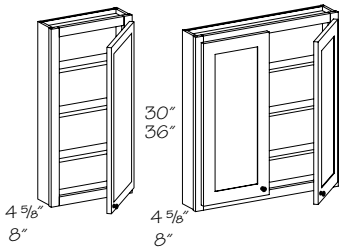

Specify R or L
4 5/8" Deep
30" High

VW120430 R or L
VW150430 R or L
❍ VW240430
VW270430

36" High

VW120436 R or L
VW150436 R or L
❍ VW240436
VW270436

Specify R or L
8" Deep
30" High

VW120830 R or L
VW150830 R or L
❍ VW240830
VW270830

36" High

VW120836 R or L
VW150836 R or L
❍ VW240836
VW270836

❍ Change Width (CW) option ***not*** available

- Three adjustable 1/2" thick shelves
- Contrasting Back Options (CBEB, CPLB, CVGR) ***not*** available

●	PE		ID
●	APC	●	CH
●	APFC		IF
●	FPEB		TWR
●	MI		WR
	DE	●	XS
	OE	●	GD
	AD_E		RTK
☆	CW		VTK
	RD		TKD

Vanity Wall Boutique

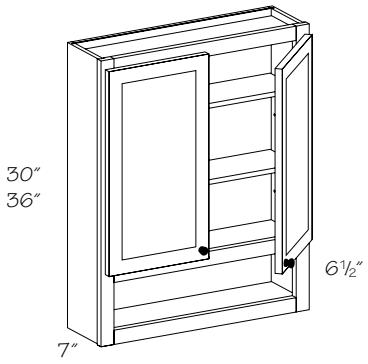

30″ High
VWB2430
36″ High
VWB2436

- Two adjustable shelves
- Replacement shelf available; specify WSVWB24

●	PE		ID
●	APC	●	CH
●	APFC		IF
●	FPEB		TWR
❖	MI		WR
	DE	●	XS
	OE	●	GD
	AD_E		RTK
	CW		VTK
●	RD		TKD

Vanity Wall–Recessed Mount

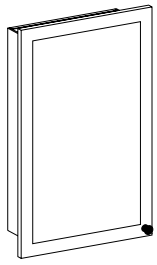

Rough-in Dimensions

Cabinet	Width	Height	Depth
VWR1727•18	14 ¼″	18″	3 ⅞″
VWR1727•24	14 ¼″	24″	3 ⅞″

VWR1727•18
VWR1727•24

- Designed for recess installation
- Two adjustable 1/2″ thick shelves
- Reversible (manufactured hinge left)
- If ordered in an arched door style, it will be supplied square
- Door Sizes:
  1/2″ Overlay = 17″ 1/2 x 28″
  Full Overlay = 17 5/8″ x 29 5/8″
- Finger Pull Rout (FPR) is ***not*** available
- Contrasting Back Options (CBEB, CPLB, CVGR) ***not*** available
- ***Not*** available with Aluminum Frame Glass doors
- ***Not*** available in EverCore™, High-Gloss Foil or Wood-Grain Foil door styles
- ***Note:*** Does ***not*** include Soft-Close feature

●	PE		ID
●	APC		CH
●	APFC		IF
●	FPEB		TWR
●	MI		WR
	DE		XS
	OE	●	GD
	AD_E		RTK
	CW		VTK
	RD		TKD

Mirror Cabinet–Recessed Mount

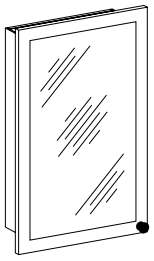

Rough-in Dimensions

Cabinet	Width	Height	Depth
MC1727•18	14 ¼″	18″	3 ⅞″
MC1727•24	14 ¼″	24″	3 ⅞″

MC1727•18
MC1727•24

- Designed for recess installation
- Two adjustable 1/2″ thick shelves
- Reversible (manufactured hinge left)
- If ordered in an arched door style, it will be supplied square
- This cabinet door includes a representative profile that may ***not*** match the chosen door style exactly, but will blend with most
- Door Size is 17″ x 27 1/2″ for all overlays
- Finger Pull Rout (FPR) is ***not*** available
- Contrasting Back Options (CBEB, CPLB, CVGR) ***not*** available
- ***Not*** available in EverCore™, High-Gloss Foil or Wood-Grain Foil door styles
- ***Note:*** Does ***not*** include Soft-Close feature

●	PE		ID
●	APC		CH
●	APFC		IF
●	FPEB		TWR
●	MI		WR
	DE		XS
	OE		GD
	AD_E		RTK
	CW		VTK
	RD		TKD

Mirror Cabinet–Surface Mount

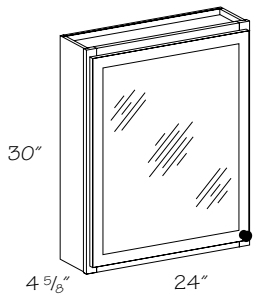

MC2430

- Designed for surface mount installation
- Three adjustable 1/2″ thick shelves
- Reversible (manufactured hinge left)
- If ordered in an arched door style, it will be supplied square
- Face frame has profiled outer edge
- Finger Pull Rout (FPR) is ***not*** available
- Contrasting Back Options (CBEB, CPLB, CVGR) ***not*** available
- ***Not*** available in EverCore™, High-Gloss Foil or Wood-Grain Foil door styles

●	PE		ID
●	APC		CH
●	APFC		IF
●	FPEB		TWR
●	MI		WR
	DE		XS
	OE		GD
	AD_E		RTK
	CW		VTK
	RD		TKD

Vanity Mirror Angle Cabinet

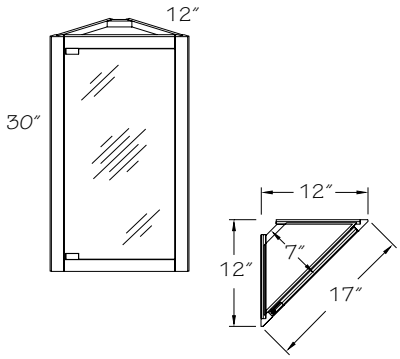

VMA1230 ▪PC
VMA1230 ▪SN

- Two adjustable 1/2″ thick shelves
- Reversible (manufactured hinge left)
- Hinges and touch latch available in Polished Chrome (PC) or Satin Nickel (SN)
- Painted hardwood supplied for EverCore™ and Thermofoil
- Painted or Stained hardwood supplied for Wood-Grain Foil door styles
- Contrasting Back Options (CBEB, CPLB, CVGR) ***not*** available

● PE	ID
● APC	CH
● APFC	IF
● FPEB	TWR
● MI	WR
DE	XS
OE	GD
AD_E	RTK
CW	VTK
RD	TKD

Vanity Mirror Cabinet

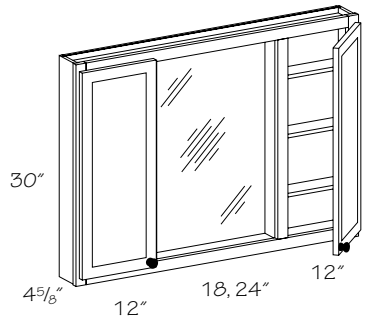

VMC4230
VMC4830

- Designed for surface mount installation
- Six adjustable 1/2″ thick shelves
- Recessed center mirror
- Painted hardwood supplied for EverCore™ and Thermofoil
- Contrasting Back Options (CBEB, CPLB, CVGR) ***not*** available
- ***Not*** available in High-Gloss Foil door styles

● PE	ID
● APC	CH
● APFC	IF
● FPEB	TWR
● MI	WR
DE	● XS
OE	● GD
AD_E	RTK
CW	VTK
RD	TKD

Vanity Mirror Cabinet Storage

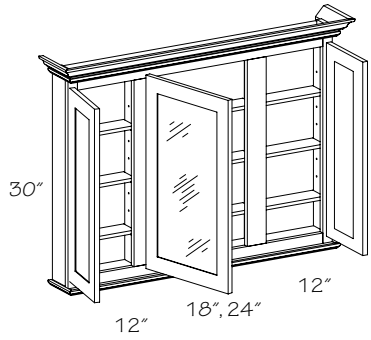

VMCS4230 ▪ACM
VMCS4830 ▪ACM
VMCS4230 ▪CCM
VMCS4830 ▪CCM
VMCS4230 ▪LCM
VMCS4830 ▪LCM
VMCS4230 ▪LCVM
VMCS4830 ▪LCVM
❊ **VMCS4230 ▪LFDM**
❊ **VMCS4830 ▪LFDM**
VMCS4230 ▪T
VMCS4830 ▪T

❊ Available in Cherry, EverCore™, Thermofoil, Maple and White Wood-Grain Foil door styles only

- Solid wood frame, top and bottom plate
- Nine adjustable 1/2″ shelves
- Trimmed with choice of Angle Crown Molding (ACM), Classic Crown Molding (CCM), Large Crown Molding (LCM), Large Cove Molding (LCVM) or Large Federal Molding (LFDM), Traditional Molding (T)
- Molding is plain sawn wood in quartersawn door styles
- Contrasting Back Options (CBEB, CPLB, CVGR) ***not*** available
- ***Not*** available in High-Gloss Foil door styles
- ***Not*** available in Wood-Grain Foil slab door styles

● PE	ID
● APC	CH
● APFC	IF
● FPEB	TWR
● MI	WR
DE	XS
OE	● GD
AD_E	RTK
CW	VTK
RD	TKD

Tri View Mirror

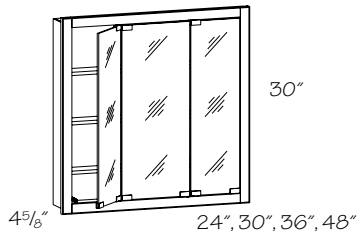

TV2430 ▪PC
TV3030 ▪PC
TV3630 ▪PC
TV4830 ▪PC
TV2430 ▪SN
TV3030 ▪SN
TV3630 ▪SN
TV4830 ▪SN

- For surface mount or recess installation
- Three adjustable 1/2″ thick shelves
- Hinges and touch latch available in Polished Chrome (PC) or Satin Nickel (SN)
- Painted hardwood supplied for EverCore™ and Thermofoil
- Painted or Stained hardwood supplied for Wood-Grain Foil door styles
- ***Not*** available in Morristown; Melrose and Putnam supplied plain sawn

● PE	ID
● APC	CH
● APFC	IF
● FPEB	TWR
● MI	WR
DE	XS
OE	GD
AD_E	RTK
CW	VTK
RD	TKD

Rough-in Dimensions

Cabinet	Width	Height	Depth
TV2430	23 1/16″	28 ¾″	3 ⅞″
TV3030	29 1/16″	28 ¾″	3 ⅞″
TV3630	35 1/16″	28 ¾″	3 ⅞″
TV4830	47 1/16″	28 ¾″	3 ⅞″

Lighted Tri View Mirror

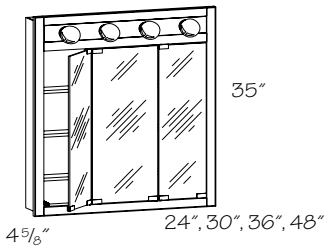

Rough-in Dimensions

Cabinet	Width	Height	Depth	# lights
LTV2435	23 1⁄16″	33 3⁄4″	3 7⁄8″	3
LTV3035	29 1⁄16″	33 3⁄4″	3 7⁄8″	4
LTV3635	35 1⁄16″	33 3⁄4″	3 7⁄8″	5
LTV4835	47 1⁄16″	33 3⁄4″	3 7⁄8″	7

LTV2435 ▪PC
LTV3035 ▪PC
LTV3635 ▪PC
LTV4835 ▪PC
LTV2435 ▪SN
LTV3035 ▪SN
LTV3635 ▪SN
LTV4835 ▪SN

- For surface mount or recess installation
- Three adjustable 1/2″ thick shelves
- Light bar, hinges and touch latch available in Polished Chrome (PC) or Satin Nickel (SN)
- Light bulbs ***not*** included
- Painted hardwood supplied for EverCore™ and Thermofoil
- Painted or Stained hardwood supplied for Wood-Grain Foil door styles
- ***Not*** available in Morristown; Melrose and Putnam supplied plain sawn

	PE	ID
●	APC	CH
●	APFC	IF
●	FPEB	TWR
●	MI	WR
	DE	XS
	OE	GD
	AD_E	RTK
	CW	VTK
	RD	TKD

Flat Framed Beveled Mirror

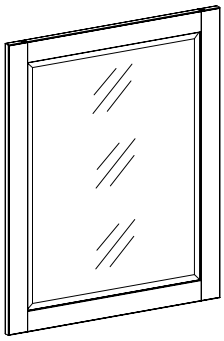

FM2130 ▪F
FM2430 ▪F
FM2136 ▪F
FM2436 ▪F

- Painted hardwood supplied for EverCore™
- Painted or Stained hardwood supplied for Wood-Grain Foil door styles

	PE	ID
	APC	CH
	APFC	IF
	FPEB	TWR
	MI	WR
	DE	XS
	OE	GD
	AD_E	RTK
	CW	VTK
	RD	TKD

Framed Mirror–Angle Crown

24 7⁄8″, 27 7⁄8″, 30 7⁄8″, 33 7⁄8″, 36 7⁄8″, 39 7⁄8″, 45 7⁄8″, 51 7⁄8″

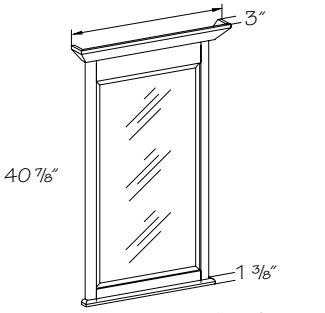

FM2136 ▪ACM
FM2436 ▪ACM
FM2736 ▪ACM
FM3036 ▪ACM
FM3336 ▪ACM
FM3636 ▪ACM
FM4236 ▪ACM
FM4836 ▪ACM

- Solid wood frame, top and bottom plate
- Decorative Angle Crown Molding (ACM8)
- Routed bottom plate
- Beveled mirror
- Crafted or Quartersawn door styles will be supplied in plain sawn wood
- Painted hardwood supplied for EverCore™
- Painted or Stained hardwood supplied for Wood-Grain Foil door styles

	PE	ID
	APC	CH
	APFC	IF
	FPEB	TWR
	MI	WR
	DE	XS
	OE	GD
	AD_E	RTK
	CW	VTK
	RD	TKD

Consider using a Replacement Door with a Mirage (MIR) glass insert for a wider range of sizes when selecting a mirror.

Framed Mirror–Classic

25 13⁄16″, 28 13⁄16″, 31 13⁄16″, 34 13⁄16″, 37 13⁄16″, 40 13⁄16″, 46 13⁄16″, 52 13⁄16″

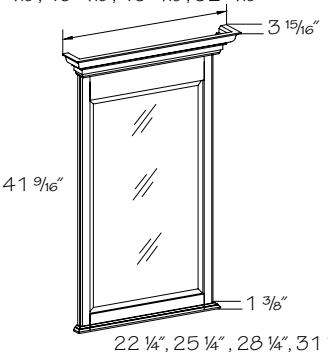

FM2136 ▪CCM
FM2436 ▪CCM
FM2736 ▪CCM
FM3036 ▪CCM
FM3336 ▪CCM
FM3636 ▪CCM
FM4236 ▪CCM
FM4836 ▪CCM

- Solid wood frame, top and bottom plate
- Decorative Classic Crown Molding (CCM8)
- Routed top and bottom plate
- Beveled mirror
- Crafted or Quartersawn door styles will be supplied in plain sawn wood
- Painted hardwood supplied for EverCore™
- Painted or Stained hardwood supplied for Wood-Grain Foil door styles

	PE	ID
	APC	CH
	APFC	IF
	FPEB	TWR
	MI	WR
	DE	XS
	OE	GD
	AD_E	RTK
	CW	VTK
	RD	TKD

Framed Mirror–Large Cove

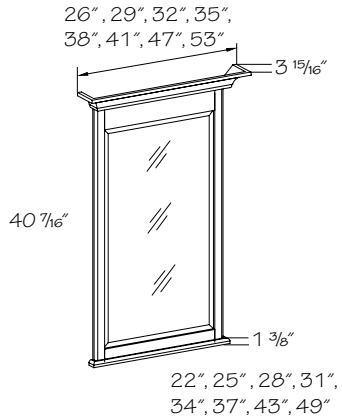

FM2136 •LCVM
FM2436 •LCVM
FM2736 •LCVM
FM3036 •LCVM
FM3336 •LCVM
FM3636 •LCVM
FM4236 •LCVM
FM4836 •LCVM

- Solid wood frame, top and bottom plate
- Decorative Large Cove Molding (LCVM8)
- Routed top and bottom plate
- Beveled mirror
- Crafted or Quartersawn door styles will be supplied in plain sawn wood
- ***Not*** available in Rustic Alder door styles
- Painted hardwood supplied for EverCore™
- Painted or Stained hardwood supplied for Wood-Grain Foil door styles

PE	ID
APC	CH
APFC	IF
FPEB	TWR
MI	WR
DE	XS
OE	GD
AD_E	RTK
CW	VTK
RD	TKD

Framed Mirror–Large Crown

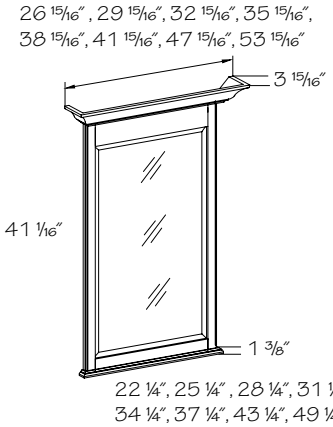

FM2136 •LCM
FM2436 •LCM
FM2736 •LCM
FM3036 •LCM
FM3336 •LCM
FM3636 •LCM
FM4236 •LCM
FM4836 •LCM

- Solid wood frame, top and bottom plate
- Decorative Large Crown Molding (LCM8)
- Routed top and bottom plate
- Beveled mirror
- Crafted or Quartersawn door styles will be supplied in plain sawn wood
- Painted hardwood supplied for EverCore™
- Painted or Stained hardwood supplied for Wood-Grain Foil door styles

PE	ID
APC	CH
APFC	IF
FPEB	TWR
MI	WR
DE	XS
OE	GD
AD_E	RTK
CW	VTK
RD	TKD

Framed Mirror–Traditional

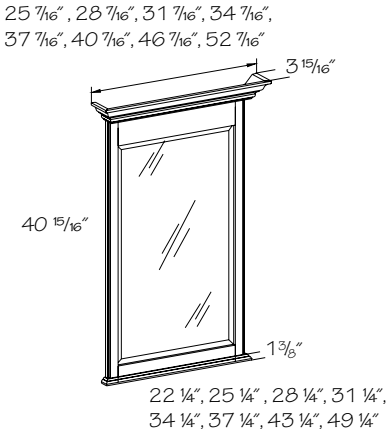

FM2136 •T
FM2436 •T
FM2736 •T
FM3036 •T
FM3336 •T
FM3636 •T
FM4236 •T
FM4836 •T

- Solid wood frame, top and bottom plate
- Decorative Crown Molding (CM8)
- Routed top and bottom plate
- Beveled mirror
- Crafted or Quartersawn door styles will be supplied in plain sawn wood
- Painted hardwood supplied for EverCore™
- Painted or Stained hardwood supplied for Wood-Grain Foil door styles

PE	ID
APC	CH
APFC	IF
FPEB	TWR
MI	WR
DE	XS
OE	GD
AD_E	RTK
CW	VTK
RD	TKD

Portrait Framed Mirror–Classic

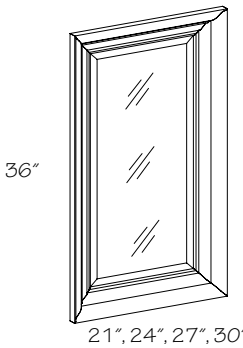

PFM2136 •CCM
PFM2436 •CCM
PFM2736 •CCM
PFM3036 •CCM
PFM3336 •CCM
PFM3636 •CCM
PFM4236 •CCM
PFM4836 •CCM

- Decorative Classic Crown Molding (CCM8)
- Beveled mirror
- Crafted or Quartersawn door styles will be supplied in plain sawn wood
- Painted hardwood supplied for EverCore™
- Painted or Stained hardwood supplied for Wood-Grain Foil door styles

PE	ID
APC	CH
APFC	IF
FPEB	TWR
MI	WR
DE	XS
OE	GD
AD_E	RTK
CW	VTK
RD	TKD

Portrait Framed Mirror–Cove

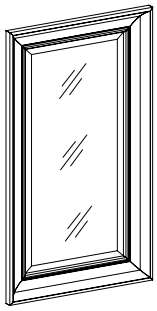

20 5/16″, 23 5/16″, 26 5/16″, 29 5/16″, 32 5/16″, 35 5/16″, 41 5/16″, 47 5/16″

PFM2136 ▪LCVM
PFM2436 ▪LCVM
PFM2736 ▪LCVM
PFM3036 ▪LCVM
PFM3336 ▪LCVM
PFM3636 ▪LCVM
PFM4236 ▪LCVM
PFM4836 ▪LCVM

- Decorative Large Cove Molding (LCVM8)
- Beveled mirror
- Crafted or Quartersawn door styles will be supplied in plain sawn wood
- ***Not*** available in Rustic Alder door styles
- Painted hardwood supplied for EverCore™
- Painted or Stained hardwood supplied for Wood-Grain Foil door styles

PE	ID
APC	CH
APFC	IF
FPEB	TWR
MI	WR
DE	XS
OE	GD
AD_E	RTK
CW	VTK
RD	TKD

Portrait Framed Mirror–Federal

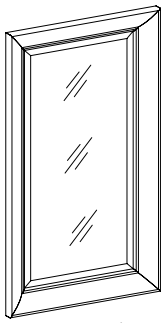

21″, 24″, 27″, 30″, 33″, 36″, 42″, 48″

PFM2136 ▪LFDM
PFM2436 ▪LFDM
PFM2736 ▪LFDM
PFM3036 ▪LFDM
PFM3336 ▪LFDM
PFM3636 ▪LFDM
PFM4236 ▪LFDM
PFM4836 ▪LFDM

- Decorative Large Federal Molding (LFDM8)
- Beveled mirror
- Available in Cherry, EverCore™, Thermofoil, Maple and White Wood-Grain Foil door styles only
- Painted hardwood supplied for EverCore™ and Thermofoil

PE	ID
APC	CH
APFC	IF
FPEB	TWR
MI	WR
DE	XS
OE	GD
AD_E	RTK
CW	VTK
RD	TKD

Portrait Framed Mirror–Traditional

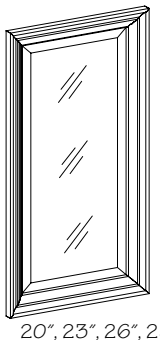

20″, 23″, 26″, 29″, 32″, 35″, 41″, 47″

PFM2136 ▪CM
PFM2436 ▪CM
PFM2736 ▪CM
PFM3036 ▪CM
PFM3336 ▪CM
PFM3636 ▪CM
PFM4236 ▪CM
PFM4836 ▪CM

- Decorative Crown Molding (CM8)
- Beveled mirror
- Crafted or Quartersawn door styles will be supplied in plain sawn wood
- Painted hardwood supplied for EverCore™
- Painted or Stained hardwood supplied for Wood-Grain Foil door styles

PE	ID
APC	CH
APFC	IF
FPEB	TWR
MI	WR
DE	XS
OE	GD
AD_E	RTK
CW	VTK
RD	TKD

Montrose Collection (S1)

VCDF	60	18	34	•S1
code	width	depth	height	series

Available in full overlay door styles only.

All Decorative Accent Vanities come with a matching 1/2" plywood toe kick as standard.

Decorative Skirts add 1 5/16" to the frame width

Material dimensions listed may vary slightly from actual dimensions of the product.

Specifications subject to change without notice.

Construction Options and Modifications

❖ Included as standard
● Available with an upcharge
☆ Available with exceptions
(Blank) ***Not*** available

APFC	All Plywood Furniture Construction
FPEB	Furniture Plywood Ends
MI	Matching Interior
DE	Integrated Decorative End
AD_E	Attached Decorative End
RD	Reduced Depth
TWR	Top Wide Rail
WR	Wide Bottom Rail
XS	Extended Stile
GD	Glass Doors
RTK	Recessed Toe Kick
VTK	Void Toe Kick

Montrose Collection (S1)

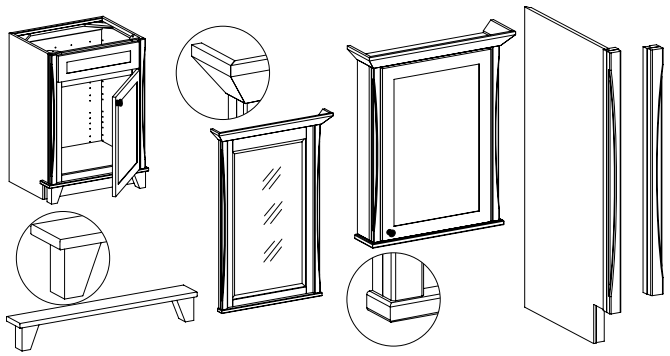

- This collection offers soft curved lines and tapered feet that give the flexibility to take the room from contemporary to casual farmhouse or craftsman styles.
- Angle Crown Molding (ACM) is applied to tops of Vanity Walls and Mirrors; a solid wood plate with eased edges is applied to the bottom
- 1 1/2" side accents are softly curved and chamfered
- Toe kick accent includes 3/4" plate with tapered legs
- Toe kick skirt ships separately for field installation
- Simple, understated, clean line door styles are recommended to achieve the best design aesthetics

Vanity Sink Base Single Door w/Decorative Accents Montrose Collection (S1)

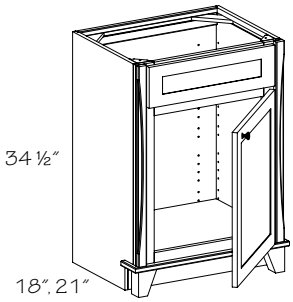

Specify R or L

34 1/2" High, 18" Deep
VSB241834 R or L•S1

34 1/2" High, 21" Deep
VSB242134 R or L•S1

- Single door and drawer front
- Available in Rustic Alder, Cherry, EverCore™, Thermofoil and Maple and full overlay door styles only
- Painted hardwood supplied for EverCore™ and Thermofoil
- Optional Utensil Trays (UT and SUT) are available
- Optional Door Storage Unit (SBDSU) is available

●	APFC
❖	FPEB
●	MI
●	DE
●	AD_E
●	RD
●	TWR
	WR
	XS
●	GD
	RTK
	VTK

Vanity Sink Base Double Door w/Decorative Accents Montrose Collection (S1)

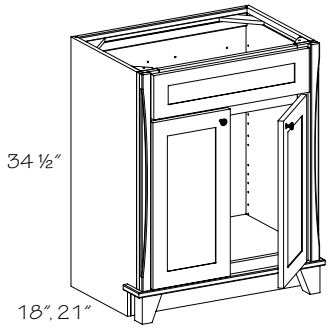

34 1/2" High, 18" Deep	*34 1/2" High, 21" Deep*
▲ **VSB271834 •S1**	▲ **VSB272134 •S1**
▲ **VSB301834 •S1**	▲ **VSB302134 •S1**
VSB331834 •S1	**VSB332134 •S1**
VSB361834 •S1	**VSB362134 •S1**
VSB391834 •S1	**VSB392134 •S1**

▲ Sink Base Door Storage Unit (SBDSU) ***not*** available

- Single drawer front
- Available in Rustic Alder, Cherry, EverCore™, Thermofoil and Maple and full overlay door styles only
- Painted hardwood supplied for EverCore™ and Thermofoil
- Optional Utensil Trays (UT and SUT) are available
- Optional Door Storage Unit (SBDSU) is available
- Skirt ships separately

●	APFC
❖	FPEB
●	MI
●	DE
●	AD_E
●	RD
●	TWR
	WR
	XS
●	GD
	RTK
	VTK

Vanity Sink Base Three Drawer w/Decorative Accents Montrose Collection (S1)

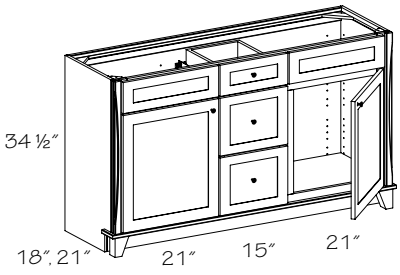

34 1/2" High, 18" Deep
VSB601834 ▪3▪S1
34 1/2" High, 21" Deep
VSB602134 ▪3▪S1

● APFC
❖ FPEB
● MI
● DE
● AD_E
● RD
● TWR
WR
XS
● GD
RTK
VTK

- Three drawer stack in center
- One standard drawer
- Two deep drawers
- Available in Rustic Alder, Cherry, EverCore™, Thermofoil and Maple and full overlay door styles only
- Painted hardwood supplied for EverCore™ and Thermofoil
- Scoop Top Drawer (STDW) option available
- Optional Door Storage Unit (SBDSU) is available
- Optional Vanity Wood Tiered Drawer Storage (VWTDS), Vanity Shallow Wood Tiered Drawer Storage (VSWTDS) and Vanity Adjustable Drawer Divider (VADD) are available
- A filler is recommended when installing decorative accent vanities against a return wall. Filler is sold separately
- Skirt ships separately

Be sure to account for the 1-1/2" decorative accent on the right and left end of the face frame to ensure the sink vessel is centered over the cabinet doors on decorative collections S1 – S4. The S5 series has no side accents and no adjustments are necessary.

Vanity Sink Base Four Drawer w/Decorative Accents Montrose Collection (S1)

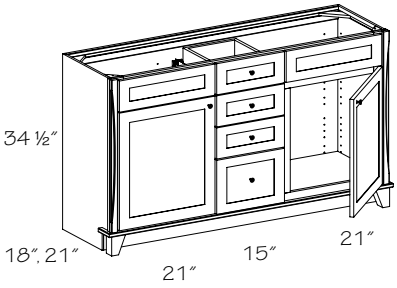

34 1/2" High, 18" Deep
VSB601834 ▪4▪S1
34 1/2" High, 21" Deep
VSB602134 ▪4▪S1

● APFC
❖ FPEB
● MI
● DE
● AD_E
● RD
● TWR
WR
XS
● GD
RTK
VTK

- Four drawer stack in center
- Three standard height drawers
- One deep drawer
- Available in Rustic Alder, Cherry, EverCore™, Thermofoil and Maple and full overlay door styles only
- Painted hardwood supplied for EverCore™ and Thermofoil
- Skirt ships separately
- Scoop Top Drawer (STDW) option available
- Optional Door Storage Unit (SBDSU) is available
- Optional Vanity Wood Tiered Drawer Storage (VWTDS), Vanity Shallow Wood Tiered Drawer Storage (VSWTDS) and Vanity Adjustable Drawer Divider (VADD) are available

Vanity Combination Drawer w/Decorative Accents (2) Montrose Collection (S1)

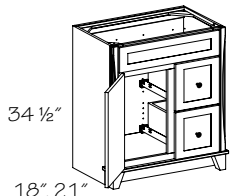

VCD27 - 36

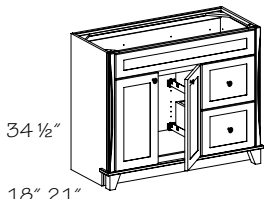

VCD42

	Drawers Left	*Drawer-Door*
	34 1/2" High, 18" Deep	
▲	**VCD271834 DL2•S1**	12″-12″
	VCD301834 DL2•S1	12″-15″
	VCD331834 DL2•S1	12″-18″
	VCD361834 DL2•S1	12″-21″
▲	**VCD421834 DL2•S1**	15″-24″
	34 1/2" High, 21" Deep	
▲	**VCD272134 DL2•S1**	12″-12″
	VCD302134 DL2•S1	12″-15″
	VCD332134 DL2•S1	12″-18″
	VCD362134 DL2•S1	12″-21″
▲	**VCD422134 DL2•S1**	15″-24″
	Drawers Right	*Door-Drawer*
	34 1/2" High, 18" Deep	
▲	**VCD271834 DR2•S1**	12″-12″
	VCD301834 DR2•S1	15″-12″
	VCD331834 DR2•S1	18″-12″
	VCD361834 DR2•S1	21″-12″
▲	**VCD421834 DR2•S1**	24″-15″
	34 1/2" High, 21" Deep	
▲	**VCD272134 DR2•S1**	12″-12″
	VCD302134 DR2•S1	15″-12″
	VCD332134 DR2•S1	18″-12″
	VCD362134 DR2•S1	21″-12″
▲	**VCD422134 DR2•S1**	24″-15″

▲ Sink Base Door Storage Unit (SBDSU) ***not*** available

- One drawer front
- Two deep drawers
- Available in Rustic Alder, Cherry, EverCore™, Thermofoil and Maple and full overlay door styles only
- Painted hardwood supplied for EverCore™ and Thermofoil
- Skirt ships separately
- Optional Door Storage Unit (SBDSU) is available
- Optional Vanity Wood Tiered Drawer Storage (VWTDS), Vanity Shallow Wood Tiered Drawer Storage (VSWTDS) and Vanity Adjustable Drawer Divider (VADD) are available

●	APFC
❖	FPEB
●	MI
●	DE
●	AD_E
●	RD
●	TWR
	WR
	XS
●	GD
	RTK
	VTK

Vanity Combination Drawer w/Decorative Accents (3) Montrose Collection (S1)

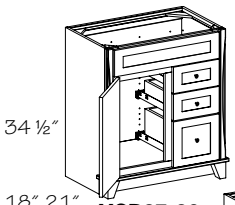

VCD27-36

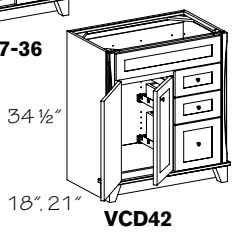

VCD42

	Drawers Left	*Drawer-Door*
	34 1/2" High, 18" Deep	
▲	**VCD271834 DL3•S1**	12″-12″
	VCD301834 DL3•S1	12″-15″
	VCD331834 DL3•S1	12″-18″
	VCD361834 DL3•S1	12″-21″
▲	**VCD421834 DL3•S1**	15″-24″
	34 1/2" High, 21" Deep	
▲	**VCD272134 DL3•S1**	12″-12″
	VCD302134 DL3•S1	12″-15″
	VCD332134 DL3•S1	12″-18″
	VCD362134 DL3•S1	12″-21″
▲	**VCD422134 DL3•S1**	15″-24″
	Drawers Right	*Door-Drawer*
	34 1/2" High, 18" Deep	
▲	**VCD271834 DR3•S1**	12″-12″
	VCD301834 DR3•S1	15″-12″
	VCD331834 DR3•S1	18″-12″
	VCD361834 DR3•S1	21″-12″
▲	**VCD421834 DR3•S1**	24″-15″
	34 1/2" High, 21" Deep	
▲	**VCD272134 DR3•S1**	12″-12″
	VCD302134 DR3•S1	15″-12″
	VCD332134 DR3•S1	18″-12″
	VCD362134 DR3•S1	21″-12″
▲	**VCD422134 DR3•S1**	24″-15″

▲ Sink Base Door Storage Unit (SBDSU) ***not*** available

- One drawer front
- Two standard drawers
- One deep drawer
- Available in Rustic Alder, Cherry, EverCore™, Thermofoil and Maple and full overlay door styles only
- Painted hardwood supplied for EverCore™ and Thermofoil
- Skirt ships separately
- Optional Door Storage Unit (SBDSU) is available
- Optional Vanity Wood Tiered Drawer Storage (VWTDS), Vanity Shallow Wood Tiered Drawer Storage (VSWTDS) and Vanity Adjustable Drawer Divider (VADD) are available

●	APFC
❖	FPEB
●	MI
●	DE
●	AD_E
●	RD
●	TWR
	WR
	XS
●	GD
	RTK
	VTK

Vanity Combination Drawer w/Decorative Accents (6) Montrose Collection (S1)

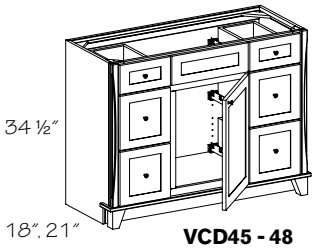

VCD45 - 48

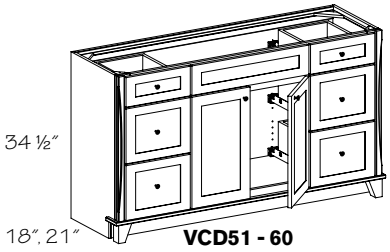

VCD51 - 60

Specify R or L	*Drawer-Door-Drawer*
34 1/2" High, 18" Deep	
❄ **VCD451834 R or L•6•S1**	12"-18"-12"
❄ **VCD481834 R or L•6•S1**	12"-21"-12"
VCD511834 •6•S1	12"-24"-12"
VCD541834 •6•S1	12"-27"-12"
VCD571834 •6•S1	15"-24"-15"
VCD601834 •6•S1	15"-27"-15"
34 1/2" High, 21" Deep	
❄ **VCD452134 R or L•6•S1**	12"-18"-12"
❄ **VCD482134 R or L•6•S1**	12"-21"-12"
VCD512134 •6•S1	12"-24"-12"
VCD542134 •6•S1	12"-27"-12"
VCD572134 •6•S1	15"-24"-15"
VCD602134 •6•S1	15"-27"-15"

❄ Scoop Top Drawer (STDW) option available

- Two standard drawers
- Four deep drawers
- Available in Rustic Alder, Cherry, EverCore™, Thermofoil and Maple and full overlay door styles only
- Painted hardwood supplied for EverCore™ and Thermofoil
- Skirt ships separately
- Scoop Top Drawer (STDW) option available
- Sink Base Door Storage Unit (SBDSU) is available on single door cabinets
- Optional Vanity Wood Tiered Drawer Storage (VWTDS), Vanity Shallow Wood Tiered Drawer Storage (VSWTDS) and Vanity Adjustable Drawer Divider (VADD) are available

●	APFC
❖	FPEB
●	MI
●	DE
●	AD_E
●	RD
●	TWR
	WR
	XS
●	GD
	RTK
	VTK

Vanity Combination Drawer w/Decorative Accents (8) Montrose Collection (S1)

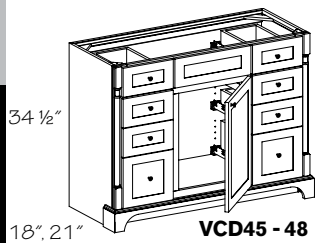

VCD45 - 48

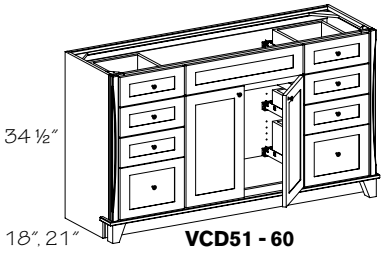

VCD51 - 60

Specify R or L	*Drawer-Door-Drawer*
34 1/2" High, 18" Deep	
VCD451834 R or L•8•S1	12"-18"-12"
VCD481834 R or L•8•S1	12"-21"-12"
VCD511834 •8•S1	12"-24"-12"
VCD541834 •8•S1	12"-27"-12"
VCD571834 •8•S1	15"-24"-15"
VCD601834 •8•S1	15"-27"-15"
34 1/2" High, 21" Deep	
VCD452134 R or L•8•S1	12"-18"-12"
VCD482134 R or L•8•S1	12"-21"-12"
VCD512134 •8•S1	12"-24"-12"
VCD542134 •8•S1	12"-27"-12"
VCD572134 •8•S1	15"-24"-15"
VCD602134 •8•S1	15"-27"-15"

- Six standard drawers
- Two deep drawers
- Available in Rustic Alder, Cherry, EverCore™, Thermofoil and Maple and full overlay door styles only
- Painted hardwood supplied for EverCore™ and Thermofoil
- Skirt ships separately
- Scoop Top Drawer (STDW) option available
- Sink Base Door Storage Unit (SBDSU) is available on single door cabinets
- Optional Vanity Wood Tiered Drawer Storage (VWTDS), Vanity Shallow Wood Tiered Drawer Storage (VSWTDS) and Vanity Adjustable Drawer Divider (VADD) are available

●	APFC
❖	FPEB
●	MI
●	DE
●	AD_E
●	RD
●	TWR
	WR
	XS
●	GD
	RTK
	VTK

Vanity Combination Drawer w/Decorative Accents–Full False Front (4) Montrose Collection (S1)

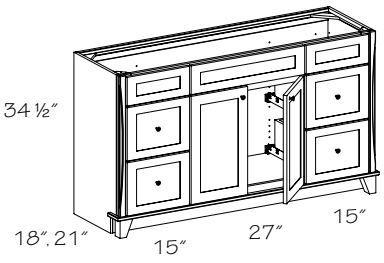

34 1/2" High, 18" Deep
VCDF601834 ▪4▪S1
34 1/2" High, 21" Deep
VCDF602134 ▪4▪S1

- Three drawer fronts
- Four deep drawers
- Available in Rustic Alder, Cherry, EverCore™, Thermofoil and Maple and full overlay door styles only
- Painted hardwood supplied for EverCore™ and Thermofoil
- Skirt ships separately
- Optional Vanity Wood Tiered Drawer Storage (VWTDS), Vanity Shallow Wood Tiered Drawer Storage (VSWTDS) and Vanity Adjustable Drawer Divider (VADD) are available

Tip: False fronts across the entire width of the cabinet allows design flexibility for single or double sink bowls

●	APFC
❖	FPEB
●	MI
●	DE
●	AD_E
●	RD
●	TWR
	WR
	XS
●	GD
	RTK
	VTK

Vanity Combination Drawer w/Decorative Accents–Full False Front (6) Montrose Collection (S1)

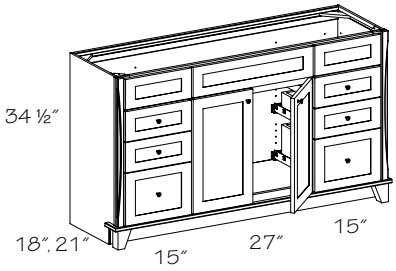

34 1/2" High, 18" Deep
VCDF601834 ▪6▪S1
34 1/2" High, 21" Deep
VCDF602134 ▪6▪S1

- Three drawer fronts
- Four standard drawers
- Two deep drawers
- Available in Rustic Alder, Cherry, EverCore™, Thermofoil and Maple and full overlay door styles only
- Painted hardwood supplied for EverCore™ and Thermofoil
- Skirt ships separately
- Optional Vanity Wood Tiered Drawer Storage (VWTDS), Vanity Shallow Wood Tiered Drawer Storage (VSWTDS) and Vanity Adjustable Drawer Divider (VADD) are available

●	APFC
❖	FPEB
●	MI
●	DE
●	AD_E
●	RD
●	TWR
	WR
	XS
●	GD
	RTK
	VTK

Vanity Wall Cabinet w/Decorative Accents Montrose Collection (S1)

VW24

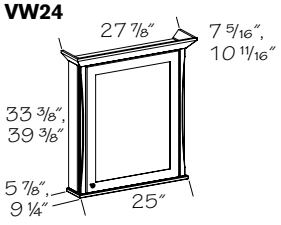

VW27

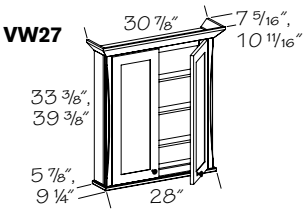

Specify R or L
5 7/8" Deep, 30" High
VW240430 R or L▪S1
VW270430 ▪S1
36" High
VW240436 R or L▪S1
VW270436 ▪S1
9 1/4" Deep, 30" High
VW240830 R or L▪S1
VW270830 ▪S1
36" High
VW240836 R or L▪S1
VW270836 ▪S1

- Available in Rustic Alder, Cherry, EverCore™, Thermofoil and Maple and full overlay door styles only
- Painted hardwood supplied for EverCore™ and Thermofoil
- Top and bottom plates ship separately

●	APFC
❖	FPEB
●	MI
	DE
	AD_E
	RD
	TWR
	WR
●	XS
●	GD
	RTK
	VTK

Framed Mirror w/Decorative Accents Montrose Collection (S1)

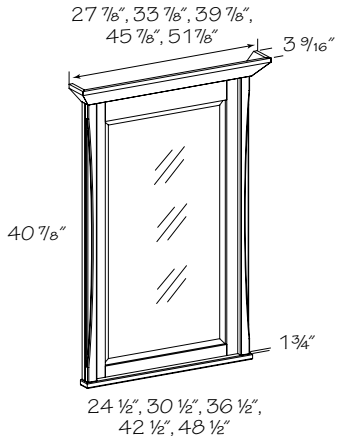

FM2436 ▪S1
FM3036 ▪S1
FM3636 ▪S1
FM4236 ▪S1
FM4836 ▪S1

- Beveled mirror
- Available in Rustic Alder, Cherry, EverCore™, Thermofoil and Maple and full overlay door styles only
- Painted hardwood supplied for EverCore™ and Thermofoil

	APFC
	FPEB
	MI
	DE
	AD_E
	RD
	TWR
	WR
	XS
	GD
	RTK
	VTK

Vanity Decorative Skirt w/Decorative Accents Montrose Collection (S1)

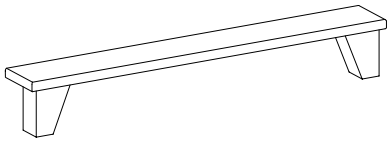

VDS1504 ▪S1
VDS1804 ▪S1
VDS2104 ▪S1
VDS2404 ▪S1
VDS2704 ▪S1
VDS3004 ▪S1
VDS3304 ▪S1
VDS3604 ▪S1
VDS3904 ▪S1
VDS4204 ▪S1
VDS4504 ▪S1
VDS4804 ▪S1
VDS5104 ▪S1
VDS5404 ▪S1
VDS5704 ▪S1
VDS6004 ▪S1

- Available in Rustic Alder, Cherry, EverCore™, Thermofoil and Maple and full overlay door styles only
- Painted hardwood supplied for EverCore™ and Thermofoil
- Solid wood front and sides stained to match or painted White or Cream
- Decorative routing at top
- Designed to fit vanity toe kick space
- If desired, matching toe kick ***must*** be ordered separately and installed before skirt

Consider using a Vanity Decorative Skirt with other cabinets to create a furniture look. Example: below a sink base or utility cabinet

APFC
FPEB
MI
DE
AD_E
RD
TWR
WR
XS
GD
RTK
VTK

Vanity Decorative Accent End Panel Montrose Collection (S1)

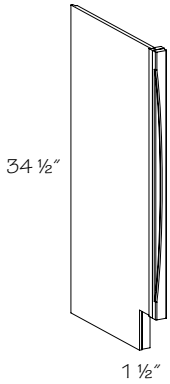

Specify R or L

DEP1834 R or L▪S1
DEP2134 R or L▪S1

- Available in Rustic Alder, Cherry, EverCore™, High-Gloss Foil, Thermofoil and Maple and full overlay door styles only
- Painted hardwood supplied for EverCore™ and Thermofoil door styles. A matching matte panel will be supplied when ordered in High-Gloss Foil door styles
- Applied decorative accent mounted toward end panel
- End panel is trimmable

● APFC
❖ FPEB
● MI
DE
AD_E
● RD
TWR
WR
XS
GD
RTK
VTK

Vanity Decorative Accent Filler Montrose Collection (S1)

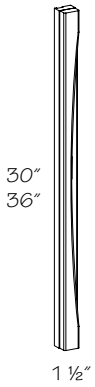

DF130 ▪S1
DF136 ▪S1

- 3/4″ thick solid wood filler with applied decorative accent centered
- Available in Rustic Alder, Cherry, EverCore™, Thermofoil and Maple and full overlay door styles only
- Painted hardwood supplied for EverCore™ and Thermofoil

APFC
FPEB
MI
DE
AD_E
RD
TWR
WR
XS
GD
RTK
VTK

Cologne Collection (S2)

VCDF	60	18	34	•S2
code	width	depth	height	series

Available in full overlay door styles only.

All Decorative Accent Vanities come with a matching 1/2" plywood toe kick as standard.

Decorative Skirts add 1 5/16" to the frame width

Material dimensions listed may vary slightly from actual dimensions of the product.

Specifications subject to change without notice.

Construction Options and Modifications

❖ Included as standard
● Available with an upcharge
☆ Available with exceptions
(Blank) ***Not*** available

APFC	All Plywood Furniture Construction
FPEB	Furniture Plywood Ends
MI	Matching Interior
DE	Integrated Decorative End
AD_E	Attached Decorative End
RD	Reduced Depth
TWR	Top Wide Rail
WR	Wide Bottom Rail
XS	Extended Stile
GD	Glass Doors
RTK	Recessed Toe Kick
VTK	Void Toe Kick

Cologne Collection (S2)

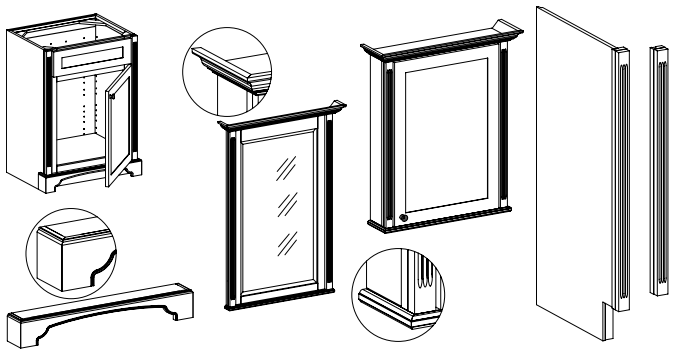

- The classic fluting detail of this style offers the formality of a traditional design aesthetic
- Crown Molding (CM) is applied to tops of Vanity Walls and Mirrors; a solid wood plate with a single bead edge is applied to the bottom
- 1 1/2" fluted side accents
- Toe kicks feature a formal, architectural skirt with a beaded edge
- Toe kick skirt ships separately for field installation
- Raised panel door styles with more details, and glazed finishes highlight the fluting and bead details of this style

Vanity Sink Base Single Door w/Decorative Accents Cologne Collection (S2)

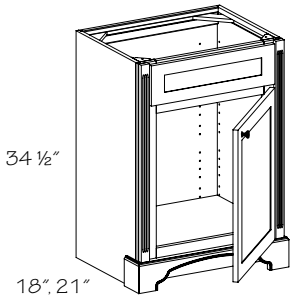

Specify R or L

34 1/2" High, 18" Deep

VSB241834 R or L•S2

34 1/2" High, 21" Deep

VSB242134 R or L•S2

- Single door and drawer front
- Available in Rustic Alder, Cherry, EverCore™, Thermofoil and Maple and full overlay door styles only
- Painted hardwood supplied for EverCore™ and Thermofoil
- Optional Utensil Trays (UT and SUT) are available
- Optional Door Storage Unit (SBDSU) is available

●	APFC
❖	FPEB
●	MI
●	DE
●	AD_E
●	RD
●	TWR
	WR
	XS
●	GD
	RTK
	VTK

Vanity Sink Base Double Door w/Decorative Accents Cologne Collection (S2)

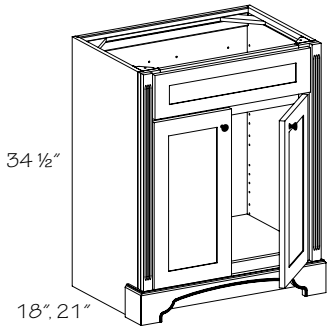

34 1/2" High, 18" Deep	*34 1/2" High, 21" Deep*
▲ **VSB271834 •S2**	▲ **VSB272134 •S2**
▲ **VSB301834 •S2**	▲ **VSB302134 •S2**
VSB331834 •S2	**VSB332134 •S2**
VSB361834 •S2	**VSB362134 •S2**
VSB391834 •S2	**VSB392134 •S2**

▲ Sink Base Door Storage Unit (SBDSU) ***not*** available

- Single drawer front
- Available in Rustic Alder, Cherry, EverCore™, Thermofoil and Maple and full overlay door styles only
- Painted hardwood supplied for EverCore™ and Thermofoil
- Skirt ships separately
- Optional Utensil Trays (UT and SUT) are available
- Optional Door Storage Unit (SBDSU) is available

●	APFC
❖	FPEB
●	MI
●	DE
●	AD_E
●	RD
●	TWR
	WR
	XS
●	GD
	RTK
	VTK

Vanity Sink Base Three Drawer w/Decorative Accents Cologne Collection (S2)

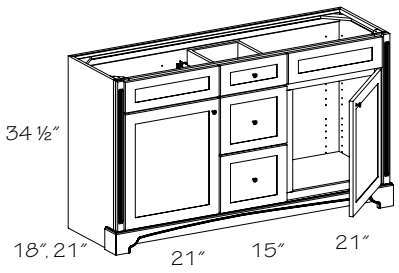

34 1/2" High, 18" Deep
VSB601834 ▪3▪S2
34 1/2" High, 21" Deep
VSB602134 ▪3▪S2

● APFC
❖ FPEB
● MI
● DE
● AD_E
● RD
● TWR
WR
XS
● GD
RTK
VTK

- Three drawer stack in center
- One standard drawer
- Two deep drawers
- Available in Rustic Alder, Cherry, EverCore™, Thermofoil and Maple and full overlay door styles only
- Painted hardwood supplied for EverCore™ and Thermofoil
- Skirt ships separately
- Scoop Top Drawer (STDW) option available
- Optional Door Storage Unit (SBDSU) is available
- Optional Vanity Wood Tiered Drawer Storage (VWTDS), Vanity Shallow Wood Tiered Drawer Storage (VSWTDS) and Vanity Adjustable Drawer Divider (VADD) are available
- A filler is recommended when installing decorative accent vanities against a return wall. Filler is sold separately

Be sure to account for the 1-1/2" decorative accent on the right and left end of the face frame to ensure the sink vessel is centered over the cabinet doors on decorative collections S1 – S4. The S5 series has no side accents and no adjustments are necessary.

Vanity Sink Base Four Drawer w/Decorative Accents Cologne Collection (S2)

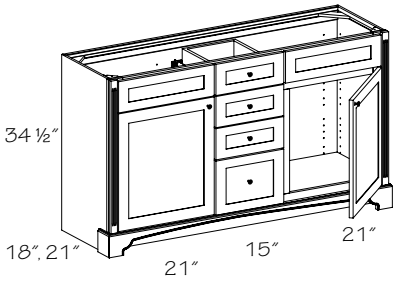

34 1/2" High, 18" Deep
VSB601834 ▪4▪S2
34 1/2" High, 21" Deep
VSB602134 ▪4▪S2

● APFC
❖ FPEB
● MI
● DE
● AD_E
● RD
● TWR
WR
XS
● GD
RTK
VTK

- Four drawer stack in center
- Three standard height drawers
- One deep drawer
- Available in Rustic Alder, Cherry, EverCore™, Thermofoil and Maple and full overlay door styles only
- Painted hardwood supplied for EverCore™ and Thermofoil
- Scoop Top Drawer (STDW) option available
- Optional Door Storage Unit (SBDSU) is available
- Optional Vanity Wood Tiered Drawer Storage (VWTDS), Vanity Shallow Wood Tiered Drawer Storage (VSWTDS) and Vanity Adjustable Drawer Divider (VADD) are available
- Skirt ships separately

Vanity Combination Drawer w/Decorative Accents (2) Cologne Collection (S2)

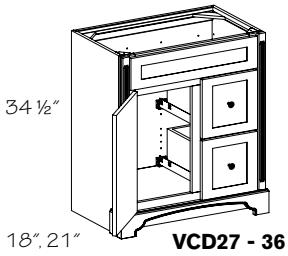

VCD27 - 36

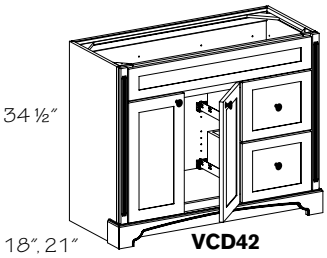

VCD42

	Drawers Left	*Drawer-Door*
	34 1/2" High, 18" Deep	
▲	**VCD271834 DL2•S2**	12″-12″
	VCD301834 DL2•S2	12″-15″
	VCD331834 DL2•S2	12″-18″
	VCD361834 DL2•S2	12″-21″
▲	**VCD421834 DL2•S2**	15″-24″
	34 1/2" High, 21" Deep	
▲	**VCD272134 DL2•S2**	12″-12″
	VCD302134 DL2•S2	12″-15″
	VCD332134 DL2•S2	12″-18″
	VCD362134 DL2•S2	12″-21″
▲	**VCD422134 DL2•S2**	15″-24″
	Drawers Right	*Door-Drawer*
	34 1/2" High, 18" Deep	
▲	**VCD271834 DR2•S2**	12″-12″
	VCD301834 DR2•S2	15″-12″
	VCD331834 DR2•S2	18″-12″
	VCD361834 DR2•S2	21″-12″
▲	**VCD421834 DR2•S2**	24″-15″
	34 1/2" High, 21" Deep	
▲	**VCD272134 DR2•S2**	12″-12″
	VCD302134 DR2•S2	15″-12″
	VCD332134 DR2•S2	18″-12″
	VCD362134 DR2•S2	21″-12″
▲	**VCD422134 DR2•S2**	24″-15″

▲ Sink Base Door Storage Unit (SBDSU) ***not*** available

- One drawer front
- Two deep drawers
- Available in Rustic Alder, Cherry, EverCore™, Thermofoil and Maple and full overlay door styles only
- Painted hardwood supplied for EverCore™ and Thermofoil
- Optional Door Storage Unit (SBDSU) is available
- Optional Vanity Wood Tiered Drawer Storage (VWTDS), Vanity Shallow Wood Tiered Drawer Storage (VSWTDS) and Vanity Adjustable Drawer Divider (VADD) are available
- Skirt ships separately

●	APFC
❖	FPEB
●	MI
●	DE
●	AD_E
●	RD
●	TWR
	WR
	XS
●	GD
	RTK
	VTK

Vanity Combination Drawer w/Decorative Accents (3) Cologne Collection (S2)

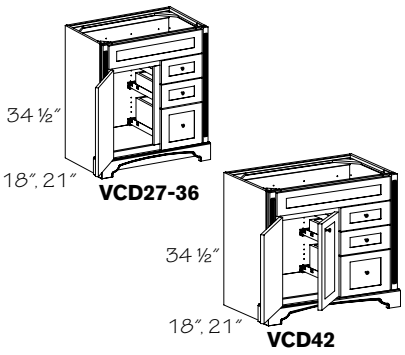

VCD27-36

VCD42

	Drawers Left	*Drawer-Door*
	34 1/2" High, 18" Deep	
▲	**VCD271834 DL3•S2**	12″-12″
	VCD301834 DL3•S2	12″-15″
	VCD331834 DL3•S2	12″-18″
	VCD361834 DL3•S2	12″-21″
▲	**VCD421834 DL3•S2**	15″-24″
	34 1/2" High, 21" Deep	
▲	**VCD272134 DL3•S2**	12″-12″
	VCD302134 DL3•S2	12″-15″
	VCD332134 DL3•S2	12″-18″
	VCD362134 DL3•S2	12″-21″
▲	**VCD422134 DL3•S2**	15″-24″
	Drawers Right	*Door-Drawer*
	34 1/2" High, 18" Deep	
▲	**VCD271834 DR3•S2**	12″-12″
	VCD301834 DR3•S2	15″-12″
	VCD331834 DR3•S2	18″-12″
	VCD361834 DR3•S2	21″-12″
▲	**VCD421834 DR3•S2**	24″-15″
	34 1/2" High, 21" Deep	
▲	**VCD272134 DR3•S2**	12″-12″
	VCD302134 DR3•S2	15″-12″
	VCD332134 DR3•S2	18″-12″
	VCD362134 DR3•S2	21″-12″
▲	**VCD422134 DR3•S2**	24″-15″

▲ Sink Base Door Storage Unit (SBDSU) ***not*** available

- One drawer front
- Two standard drawers
- One deep drawer
- Available in Rustic Alder, Cherry, EverCore™, Thermofoil and Maple and full overlay door styles only
- Painted hardwood supplied for EverCore™ and Thermofoil
- Optional Door Storage Unit (SBDSU) is available
- Optional Vanity Wood Tiered Drawer Storage (VWTDS), Vanity Shallow Wood Tiered Drawer Storage (VSWTDS) and Vanity Adjustable Drawer Divider (VADD) are available
- Skirt ships separately

●	APFC
❖	FPEB
●	MI
●	DE
●	AD_E
●	RD
●	TWR
	WR
	XS
●	GD
	RTK
	VTK

Vanity Combination Drawer w/Decorative Accents (6) Cologne Collection (S2)

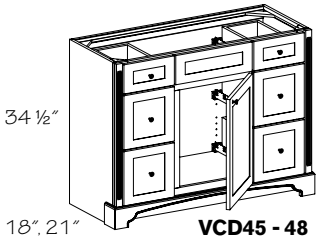

VCD45 - 48

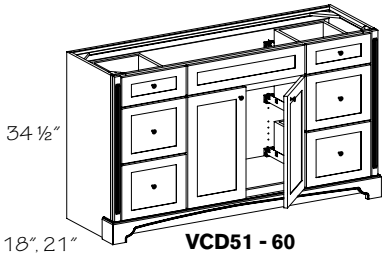

VCD51 - 60

Specify R or L	*Drawer-Door-Drawer*
34 1/2″ High, 18″ Deep	
VCD451834 R or L•6•S2	12″-18″-12″
VCD481834 R or L•6•S2	12″-21″-12″
VCD511834 •6•S2	12″-24″-12″
VCD541834 •6•S2	12″-27″-12″
VCD571834 •6•S2	15″-24″-15″
VCD601834 •6•S2	15″-27″-15″
34 1/2″ High, 21″ Deep	
VCD452134 R or L•6•S2	12″-18″-12″
VCD482134 R or L•6•S2	12″-21″-12″
VCD512134 •6•S2	12″-24″-12″
VCD542134 •6•S2	12″-27″-12″
VCD572134 •6•S2	15″-24″-15″
VCD602134 •6•S2	15″-27″-15″

- Two standard drawers
- Four deep drawers
- Available in Rustic Alder, Cherry, EverCore™, Thermofoil and Maple and full overlay door styles only
- Painted hardwood supplied for EverCore™ and Thermofoil
- Scoop Top Drawer (STDW) option available
- Sink Base Door Storage Unit (SBDSU) is available on single door cabinets
- Optional Vanity Wood Tiered Drawer Storage (VWTDS), Vanity Shallow Wood Tiered Drawer Storage (VSWTDS) and Vanity Adjustable Drawer Divider (VADD) are available
- Skirt ships separately

●	APFC
❖	FPEB
●	MI
●	DE
●	AD_E
●	RD
●	TWR
	WR
	XS
●	GD
	RTK
	VTK

Vanity Combination Drawer w/Decorative Accents (8) Cologne Collection (S2)

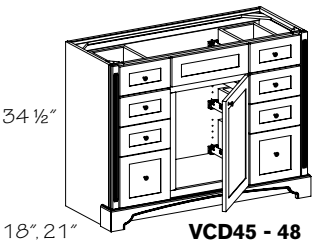

VCD45 - 48

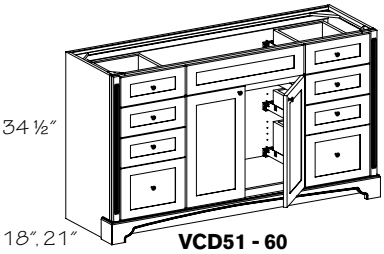

VCD51 - 60

Specify R or L	*Drawer-Door-Drawer*
34 1/2″ High, 18″ Deep	
VCD451834 R or L•8•S2	12″-18″-12″
VCD481834 R or L•8•S2	12″-21″-12″
VCD511834 •8•S2	12″-24″-12″
VCD541834 •8•S2	12″-27″-12″
VCD571834 •8•S2	15″-24″-15″
VCD601834 •8•S2	15″-27″-15″
34 1/2″ High, 21″ Deep	
VCD452134 R or L•8•S2	12″-18″-12″
VCD482134 R or L•8•S2	12″-21″-12″
VCD512134 •8•S2	12″-24″-12″
VCD542134 •8•S2	12″-27″-12″
VCD572134 •8•S2	15″-24″-15″
VCD602134 •8•S2	15″-27″-15″

- Six standard drawers
- Two deep drawers
- Available in Rustic Alder, Cherry, EverCore™, Thermofoil and Maple and full overlay door styles only
- Painted hardwood supplied for EverCore™ and Thermofoil
- Scoop Top Drawer (STDW) option available
- Sink Base Door Storage Unit (SBDSU) is available on single door cabinets
- Optional Vanity Wood Tiered Drawer Storage (VWTDS), Vanity Shallow Wood Tiered Drawer Storage (VSWTDS) and Vanity Adjustable Drawer Divider (VADD) are available
- Skirt ships separately

●	APFC
❖	FPEB
●	MI
●	DE
●	AD_E
●	RD
●	TWR
	WR
	XS
●	GD
	RTK
	VTK

Vanity Combination Drawer w/Decorative Accents–Full False Front (4) Cologne Collection (S2)

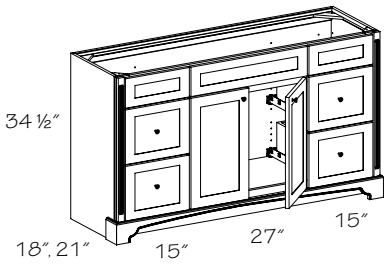

VCDF601834 ▪4▪S2
VCDF602134 ▪4▪S2

- Three drawer fronts
- Four deep drawers
- Available in Rustic Alder, Cherry, EverCore™, Thermofoil and Maple and full overlay door styles only
- Painted hardwood supplied for EverCore™ and Thermofoil
- Optional Vanity Wood Tiered Drawer Storage (VWTDS), Vanity Shallow Wood Tiered Drawer Storage (VSWTDS) and Vanity Adjustable Drawer Divider (VADD) are available
- Skirt ships separately

Tip: False fronts across the entire width of the cabinet allows design flexibility for single or double sink bowls

● APFC
❖ FPEB
● MI
● DE
● AD_E
● RD
● TWR
WR
XS
● GD
RTK
VTK

Vanity Combination Drawer w/Decorative Accents–Full False Front (6) Cologne Collection (S2)

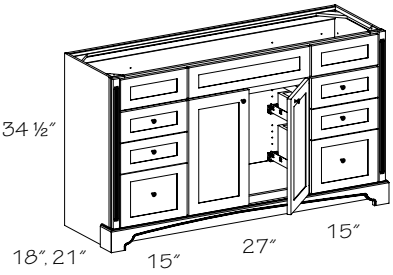

34 1/2" High, 18" Deep
VCDF601834 ▪6▪S2
34 1/2" High, 21" Deep
VCDF602134 ▪6▪S2

- Three drawer fronts
- Four standard drawers
- Two deep drawers
- Available in Rustic Alder, Cherry, EverCore™, Thermofoil and Maple and full overlay door styles only
- Painted hardwood supplied for EverCore™ and Thermofoil
- Optional Vanity Wood Tiered Drawer Storage (VWTDS), Vanity Shallow Wood Tiered Drawer Storage (VSWTDS) and Vanity Adjustable Drawer Divider (VADD) are available
- Skirt ships separately

● APFC
❖ FPEB
● MI
● DE
● AD_E
● RD
● TWR
WR
XS
● GD
RTK
VTK

Vanity Wall Cabinet w/Decorative Accents Cologne Collection (S2)

VW24

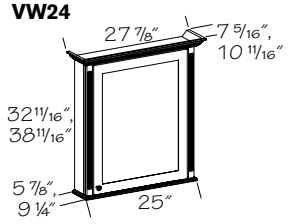

VW27

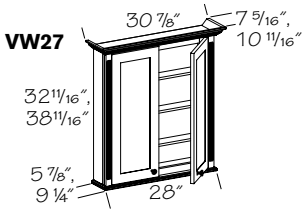

Specify R or L
5 7/8" Deep, 30" High
VW240430 R or L▪S2
VW270430 ▪S2
36" High
VW240436 R or L▪S2
VW270436 ▪S2
9 1/4 Deep, 30" High
VW240830 R or L▪S2
VW270830 ▪S2
36" High
VW240836 R or L▪S2
VW270836 ▪S2

- Available in Rustic Alder, Cherry, EverCore™, Thermofoil and Maple and full overlay door styles only
- Painted hardwood supplied for EverCore™ and Thermofoil
- Top and bottom plates ship separately

● APFC
❖ FPEB
● MI
DE
AD_E
RD
TWR
WR
● XS
● GD
RTK
VTK

Framed Mirror w/Decorative Accents Cologne Collection (S2)

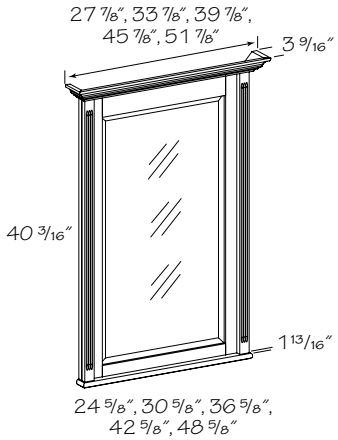

FM2436 ▪S2
FM3036 ▪S2
FM3636 ▪S2
FM4236 ▪S2
FM4836 ▪S2

- Beveled mirror
- Available in Rustic Alder, Cherry, EverCore™, Thermofoil and Maple and full overlay door styles only
- Painted hardwood supplied for EverCore™ and Thermofoil

APFC
FPEB
MI
DE
AD_E
RD
TWR
WR
XS
GD
RTK
VTK

Vanity Decorative Skirt w/Decorative Accents Cologne Collection (S2)

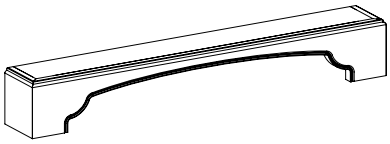

VDS1504 ▪S2
VDS1804 ▪S2
VDS2104 ▪S2
VDS2404 ▪S2
VDS2704 ▪S2
VDS3004 ▪S2
VDS3304 ▪S2
VDS3604 ▪S2
VDS3904 ▪S2
VDS4204 ▪S2
VDS4504 ▪S2
VDS4804 ▪S2
VDS5104 ▪S2
VDS5404 ▪S2
VDS5704 ▪S2
VDS6004 ▪S2
VDS6304 ▪S2
VDS6604 ▪S2
VDS6904 ▪S2
VDS7204 ▪S2

- Available in Rustic Alder, Cherry, EverCore™, Thermofoil and Maple and full overlay door styles only
- Painted hardwood supplied for EverCore™ and Thermofoil
- Solid wood front and sides stained to match or painted White or Cream
- Decorative routing at top
- Designed to fit vanity toe kick space
- If desired, matching toe kick ***must*** be ordered separately and installed before skirt

Consider using a Vanity Decorative Skirt with other cabinets to create a furniture look. Example: below a sink base or utility cabinet

APFC
FPEB
MI
DE
AD_E
RD
TWR
WR
XS
GD
RTK
VTK

Vanity Decorative Accent End Panel Cologne Collection (S2)

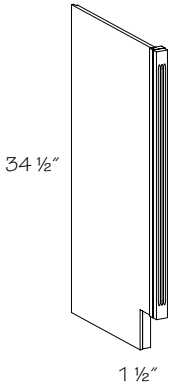

Specify R or L

DEP1834 R or L▪S2
DEP2134 R or L▪S2

- Available in Rustic Alder, Cherry, EverCore™, High-Gloss Foil, Thermofoil and Maple and full overlay door styles only
- Painted hardwood supplied for EverCore™ and Thermofoil door styles. A matching matte panel will be supplied when ordered in High-Gloss Foil door styles
- Applied decorative accent mounted toward end panel
- End panel is trimmable

● APFC
❖ FPEB
● MI
DE
AD_E
● RD
TWR
WR
XS
GD
RTK
VTK

Vanity Decorative Accent Filler Cologne Collection (S2)

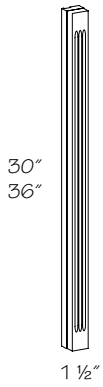

DF130 ▪S2
DF136 ▪S2

- 3/4″ thick solid wood filler with applied decorative accent centered
- Available in Rustic Alder, Cherry, EverCore™, Thermofoil and Maple and full overlay door styles only
- Painted hardwood supplied for EverCore™ and Thermofoil

APFC
FPEB
MI
DE
AD_E
RD
TWR
WR
XS
GD
RTK
VTK

Bayshore Collection (S3)

VCDF	60	18	34	•S3
code	width	depth	height	series

Available in full overlay door styles only.

All Decorative Accent Vanities come with a matching 1/2" plywood toe kick as standard.

Decorative Skirts add 1 5/16" to the frame width

Material dimensions listed may vary slightly from actual dimensions of the product.

Specifications subject to change without notice.

Construction Options and Modifications

❖ Included as standard
● Available with an upcharge
☆ Available with exceptions
(Blank) ***Not*** available

APFC	All Plywood Furniture Construction
FPEB	Furniture Plywood Ends
MI	Matching Interior
DE	Integrated Decorative End
AD_E	Attached Decorative End
RD	Reduced Depth
TWR	Top Wide Rail
WR	Wide Bottom Rail
XS	Extended Stile
GD	Glass Doors
RTK	Recessed Toe Kick
VTK	Void Toe Kick

Bayshore Collection (S3)

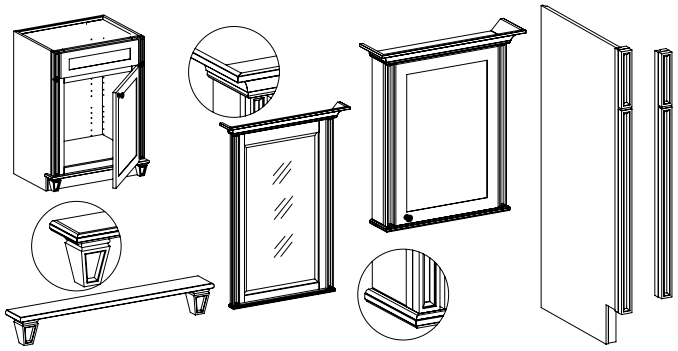

- The carved linear column detail and tapered feet are reminiscent of classic, fine furniture design
- Large Cove Molding (LCVM) is applied to tops of Vanity Walls and Mirrors; a solid wood plate with a single bead edge is applied to the bottom
- 1 1/2" carved linear column side accents
- Toe kick accent includes 3/4", single bead edged plate, and carved details on tapered legs
- Toe kick skirt ships separately for field installation
- Door style and finish combinations will drive the styling of these pieces from soft modern to classic

Vanity Sink Base Single Door w/Decorative Accents Bayshore Collection (S3)

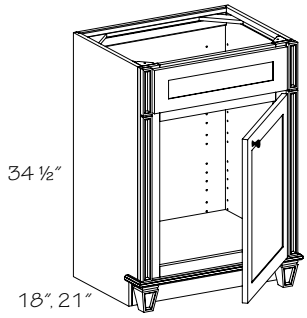

Specify R or L

34 1/2" High, 18" Deep

VSB241834 R or L•S3

34 1/2" High, 21" Deep

VSB242134 R or L•S3

- Single door and drawer front
- Available in Rustic Alder, Cherry, EverCore™, Thermofoil and Maple and full overlay door styles only
- Painted hardwood supplied for EverCore™ and Thermofoil
- Optional Utensil Trays (UT and SUT) are available
- Optional Door Storage Unit (SBDSU) is available

●	APFC
❖	FPEB
●	MI
●	DE
●	AD_E
●	RD
●	TWR
	WR
	XS
●	GD
	RTK
	VTK

Vanity Sink Base Double Door w/Decorative Accents Bayshore Collection (S3)

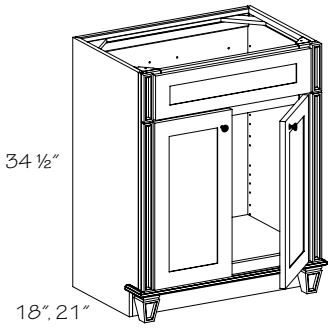

34 1/2" High, 18" Deep	*34 1/2" High, 21" Deep*
▲ **VSB271834 •S3**	▲ **VSB272134 •S3**
▲ **VSB301834 •S3**	▲ **VSB302134 •S3**
VSB331834 •S3	**VSB332134 •S3**
VSB361834 •S3	**VSB362134 •S3**
VSB391834 •S3	**VSB392134 •S3**

▲ Sink Base Door Storage Unit (SBDSU) ***not*** available

- Single drawer front
- Available in Rustic Alder, Cherry, EverCore™, Thermofoil and Maple and full overlay door styles only
- Painted hardwood supplied for EverCore™ and Thermofoil
- Optional Utensil Trays (UT and SUT) are available
- Optional Door Storage Unit (SBDSU) is available
- Skirt ships separately

●	APFC
❖	FPEB
●	MI
●	DE
●	AD_E
●	RD
●	TWR
	WR
	XS
●	GD
	RTK
	VTK

Vanity Sink Base Three Drawer w/Decorative Accents Bayshore Collection (S3)

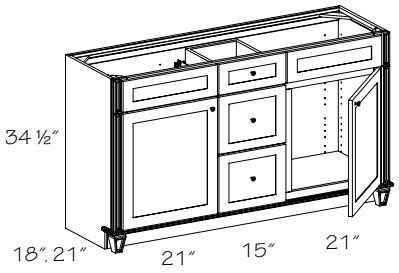

34 1/2" High, 18" Deep
VSB601834 ▪3▪S3
34 1/2" High, 21" Deep
VSB602134 ▪3▪S3

●	APFC
❖	FPEB
●	MI
●	DE
●	AD_E
●	RD
●	TWR
	WR
	XS
●	GD
	RTK
	VTK

- Three drawer stack in center
- One standard drawer
- Two deep drawers
- Available in Rustic Alder, Cherry, EverCore™, Thermofoil and Maple and full overlay door styles only
- Painted hardwood supplied for EverCore™ and Thermofoil
- Scoop Top Drawer (STDW) option available
- Optional Door Storage Unit (SBDSU) is available
- Optional Vanity Wood Tiered Drawer Storage (VWTDS), Vanity Shallow Wood Tiered Drawer Storage (VSWTDS) and Vanity Adjustable Drawer Divider (VADD) are available
- A filler is recommended when installing decorative accent vanities against a return wall. Filler is sold separately
- Skirt ships separately

Be sure to account for the 1-1/2" decorative accent on the right and left end of the face frame to ensure the sink vessel is centered over the cabinet doors on decorative collections S1 – S4. The S5 series has no side accents and no adjustments are necessary.

Vanity Sink Base Four Drawer w/Decorative Accents Bayshore Collection (S3)

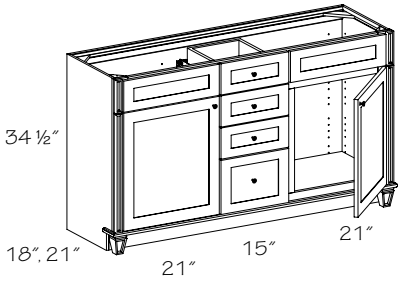

34 1/2" High, 18" Deep
VSB601834 ▪4▪S3
34 1/2" High, 21" Deep
VSB602134 ▪4▪S3

●	APFC
❖	FPEB
●	MI
●	DE
●	AD_E
●	RD
●	TWR
	WR
	XS
●	GD
	RTK
	VTK

- Four drawer stack in center
- Three standard height drawers
- One deep drawer
- Available in Rustic Alder, Cherry, EverCore™, Thermofoil and Maple and full overlay door styles only
- Painted hardwood supplied for EverCore™ and Thermofoil
- Scoop Top Drawer (STDW) option available
- Optional Door Storage Unit (SBDSU) is available
- Optional Vanity Wood Tiered Drawer Storage (VWTDS), Vanity Shallow Wood Tiered Drawer Storage (VSWTDS) and Vanity Adjustable Drawer Divider (VADD) are available
- Skirt ships separately

Vanity Combination Drawer w/Decorative Accents (2) Bayshore Collection (S3)

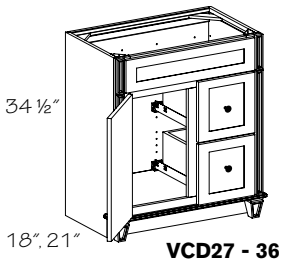

VCD27 - 36

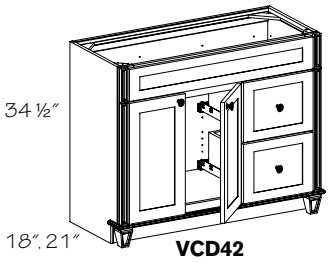

VCD42

	Drawers Left	*Drawer-Door*
	34 1/2" High, 18" Deep	
▲	**VCD271834 DL2•S3**	12"-12"
	VCD301834 DL2•S3	12"-15"
	VCD331834 DL2•S3	12"-18"
	VCD361834 DL2•S3	12"-21"
▲	**VCD421834 DL2•S3**	15"-24"
	34 1/2" High, 21" Deep	
▲	**VCD272134 DL2•S3**	12"-12"
	VCD302134 DL2•S3	12"-15"
	VCD332134 DL2•S3	12"-18"
	VCD362134 DL2•S3	12"-21"
▲	**VCD422134 DL2•S3**	15"-24"
	Drawers Right	*Door-Drawer*
	34 1/2" High, 18" Deep	
▲	**VCD271834 DR2•S3**	12"-12"
	VCD301834 DR2•S3	15"-12"
	VCD331834 DR2•S3	18"-12"
	VCD361834 DR2•S3	21"-12"
▲	**VCD421834 DR2•S3**	24"-15"
	34 1/2" High, 21" Deep	
▲	**VCD272134 DR2•S3**	12"-12"
	VCD302134 DR2•S3	15"-12"
	VCD332134 DR2•S3	18"-12"
	VCD362134 DR2•S3	21"-12"
▲	**VCD422134 DR2•S3**	24"-15"

▲ Sink Base Door Storage Unit (SBDSU) ***not*** available

- One drawer front
- Two deep drawers
- Available in Rustic Alder, Cherry, EverCore™, Thermofoil and Maple and full overlay door styles only
- Painted hardwood supplied for EverCore™ and Thermofoil
- Optional Door Storage Unit (SBDSU) is available
- Optional Vanity Wood Tiered Drawer Storage (VWTDS), Vanity Shallow Wood Tiered Drawer Storage (VSWTDS) and Vanity Adjustable Drawer Divider (VADD) are available
- Skirt ships separately

●	APFC
❖	FPEB
●	MI
●	DE
●	AD_E
●	RD
●	TWR
	WR
	XS
●	GD
	RTK
	VTK

Vanity Combination Drawer w/Decorative Accents (3) Bayshore Collection (S3)

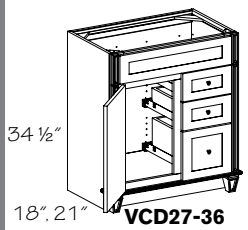

VCD27-36

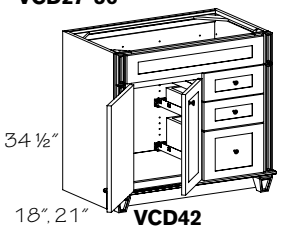

VCD42

	Drawers Left	*Drawer-Door*
	34 1/2" High, 18" Deep	
▲	**VCD271834 DL3•S3**	12"-12"
	VCD301834 DL3•S3	12"-15"
	VCD331834 DL3•S3	12"-18"
	VCD361834 DL3•S3	12"-21"
▲	**VCD421834 DL3•S3**	15"-24"
	34 1/2" High, 21" Deep	
▲	**VCD272134 DL3•S3**	12"-12"
	VCD302134 DL3•S3	12"-15"
	VCD332134 DL3•S3	12"-18"
	VCD362134 DL3•S3	12"-21"
▲	**VCD422134 DL3•S3**	15"-24"
	Drawers Right	*Door-Drawer*
	34 1/2" High, 18" Deep	
▲	**VCD271834 DR3•S3**	12"-12"
	VCD301834 DR3•S3	15"-12"
	VCD331834 DR3•S3	18"-12"
	VCD361834 DR3•S3	21"-12"
▲	**VCD421834 DR3•S3**	24"-15"
	34 1/2" High, 21" Deep	
▲	**VCD272134 DR3•S3**	12"-12"
	VCD302134 DR3•S3	15"-12"
	VCD332134 DR3•S3	18"-12"
	VCD362134 DR3•S3	21"-12"
▲	**VCD422134 DR3•S3**	24"-15"

▲ Sink Base Door Storage Unit (SBDSU) ***not*** available

- One drawer front
- Two standard drawers
- One deep drawer
- Available in Rustic Alder, Cherry, EverCore™, Thermofoil and Maple and full overlay door styles only
- Painted hardwood supplied for EverCore™ and Thermofoil
- Optional Door Storage Unit (SBDSU) is available
- Optional Vanity Wood Tiered Drawer Storage (VWTDS), Vanity Shallow Wood Tiered Drawer Storage (VSWTDS) and Vanity Adjustable Drawer Divider (VADD) are available
- Skirt ships separately

●	APFC
❖	FPEB
●	MI
●	DE
●	AD_E
●	RD
●	TWR
	WR
	XS
●	GD
	RTK
	VTK

Vanity Combination Drawer w/Decorative Accents (6) Bayshore Collection (S3)

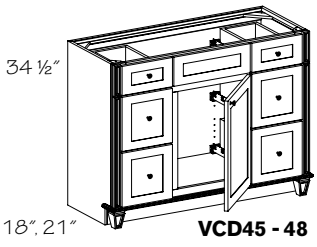

VCD45 - 48

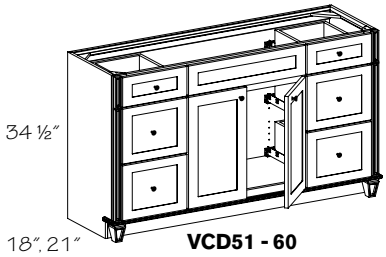

VCD51 - 60

Specify R or L	*Drawer-Door-Drawer*
34 1/2" High, 18" Deep	
VCD451834 R or L•6•S3	12"-18"-12"
VCD481834 R or L•6•S3	12"-21"-12"
VCD511834 •6•S3	12"-24"-12"
VCD541834 •6•S3	12"-27"-12"
VCD571834 •6•S3	15"-24"-15"
VCD601834 •6•S3	15"-27"-15"
34 1/2" High, 21" Deep	
VCD452134 R or L•6•S3	12"-18"-12"
VCD482134 R or L•6•S3	12"-21"-12"
VCD512134 •6•S3	12"-24"-12"
VCD542134 •6•S3	12"-27"-12"
VCD572134 •6•S3	15"-24"-15"
VCD602134 •6•S3	15"-27"-15"

- Two standard drawers
- Four deep drawers
- Available in Rustic Alder, Cherry, EverCore™, Thermofoil and Maple and full overlay door styles only
- Painted hardwood supplied for EverCore™ and Thermofoil
- Scoop Top Drawer (STDW) option available
- Sink Base Door Storage Unit (SBDSU) is available on single door cabinets
- Optional Vanity Wood Tiered Drawer Storage (VWTDS), Vanity Shallow Wood Tiered Drawer Storage (VSWTDS) and Vanity Adjustable Drawer Divider (VADD) are available
- Skirt ships separately

●	APFC
❖	FPEB
●	MI
●	DE
●	AD_E
●	RD
●	TWR
	WR
	XS
●	GD
	RTK
	VTK

Vanity Combination Drawer w/Decorative Accents (8) Bayshore Collection (S3)

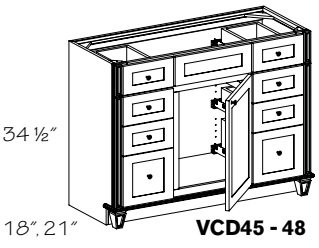

VCD45 - 48

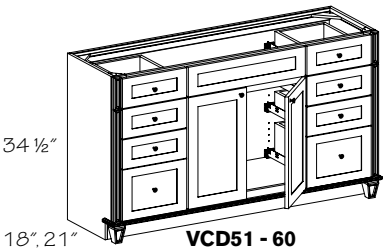

VCD51 - 60

Specify R or L	*Drawer-Door-Drawer*
34 1/2" High, 18" Deep	
VCD451834 R or L•8•S3	12"-18"-12"
VCD481834 R or L•8•S3	12"-21"-12"
VCD511834 •8•S3	12"-24"-12"
VCD541834 •8•S3	12"-27"-12"
VCD571834 •8•S3	15"-24"-15"
VCD601834 •8•S3	15"-27"-15"
34 1/2" High, 21" Deep	
VCD452134 R or L•8•S3	12"-18"-12"
VCD482134 R or L•8•S3	12"-21"-12"
VCD512134 •8•S3	12"-24"-12"
VCD542134 •8•S3	12"-27"-12"
VCD572134 •8•S3	15"-24"-15"
VCD602134 •8•S3	15"-27"-15"

- Six standard drawers
- Two deep drawers
- Scoop Top Drawer (STDW) option available
- Available in Rustic Alder, Cherry, EverCore™, Thermofoil and Maple and full overlay door styles only
- Painted hardwood supplied for EverCore™ and Thermofoil
- Sink Base Door Storage Unit (SBDSU) is available on single door cabinets
- Optional Vanity Wood Tiered Drawer Storage (VWTDS), Vanity Shallow Wood Tiered Drawer Storage (VSWTDS) and Vanity Adjustable Drawer Divider (VADD) are available
- Skirt ships separately

●	APFC
❖	FPEB
●	MI
●	DE
●	AD_E
●	RD
●	TWR
	WR
	XS
●	GD
	RTK
	VTK

Vanity Combination Drawer w/Decorative Accents–Full False Front (4) Bayshore Collection (S3)

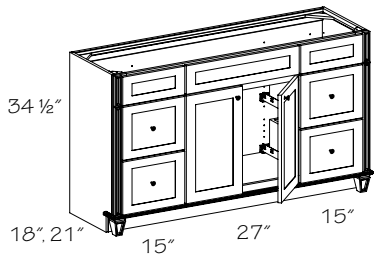

34 1/2" High, 18" Deep
VCDF601834 ▪4▪S3
34 1/2" High, 21" Deep
VCDF602134 ▪4▪S3

- Three drawer fronts
- Four deep drawers
- Available in Rustic Alder, Cherry, EverCore™, Thermofoil and Maple and full overlay door styles only
- Painted hardwood supplied for EverCore™ and Thermofoil
- Optional Vanity Wood Tiered Drawer Storage (VWTDS), Vanity Shallow Wood Tiered Drawer Storage (VSWTDS) and Vanity Adjustable Drawer Divider (VADD) are available
- Skirt ships separately

Tip: False fronts across the entire width of the cabinet allows design flexibility for single or double sink bowls

● APFC
❖ FPEB
● MI
● DE
● AD_E
● RD
● TWR
WR
XS
● GD
RTK
VTK

Vanity Combination Drawer w/Decorative Accents–Full False Front (6) Bayshore Collection (S3)

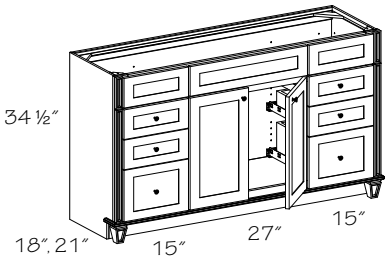

34 1/2" High, 18" Deep
VCDF601834 ▪6▪S3
34 1/2" High, 21" Deep
VCDF602134 ▪6▪S3

- Three drawer fronts
- Four standard drawers
- Two deep drawers
- Available in Rustic Alder, Cherry, EverCore™, Thermofoil and Maple and full overlay door styles only
- Painted hardwood supplied for EverCore™ and Thermofoil
- Optional Vanity Wood Tiered Drawer Storage (VWTDS), Vanity Shallow Wood Tiered Drawer Storage (VSWTDS) and Vanity Adjustable Drawer Divider (VADD) are available
- Skirt ships separately

● APFC
❖ FPEB
● MI
● DE
● AD_E
● RD
● TWR
WR
XS
● GD
RTK
VTK

Vanity Wall Cabinet w/Decorative Accents Bayshore Collection (S3)

VW24

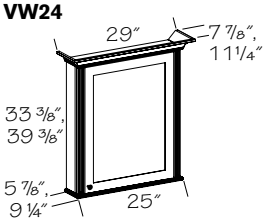

VW27

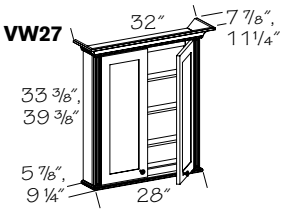

Specify R or L
5 7/8" Deep, 30" High
VW240430 R or L▪S3
VW270430 ▪S3
36" High
VW240436 R or L▪S3
VW270436 ▪S3
9 1/4" Deep, 30" High
VW240830 R or L▪S3
VW270830 ▪S3
36" High
VW240836 R or L▪S3
VW270836 ▪S3

- Available in Rustic Alder, Cherry, EverCore™, Thermofoil and Maple and full overlay door styles only
- Painted hardwood supplied for EverCore™ and Thermofoil
- Top and bottom plates ship separately

● APFC
❖ FPEB
● MI
DE
AD_E
RD
TWR
WR
● XS
● GD
RTK
VTK

Framed Mirror w/Decorative Accents Bayshore Collection (S3)

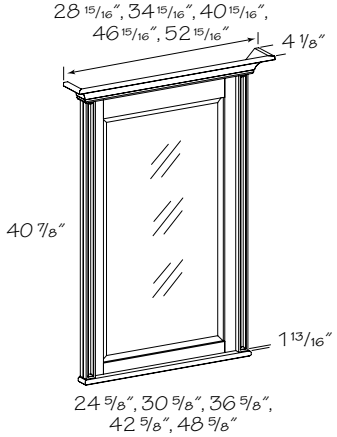

FM2436 ▪S3
FM3036 ▪S3
FM3636 ▪S3
FM4236 ▪S3
FM4836 ▪S3

- Beveled mirror
- Available in Rustic Alder, Cherry, EverCore™, Thermofoil and Maple and full overlay door styles only
- Painted hardwood supplied for EverCore™ and Thermofoil

APFC
FPEB
MI
DE
AD_E
RD
TWR
WR
XS
GD
RTK
VTK

Vanity Decorative Skirt w/Decorative Accents Bayshore Collection (S3)

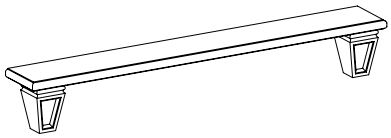

VDS1504 ▪S3
VDS1804 ▪S3
VDS2104 ▪S3
VDS2404 ▪S3
VDS2704 ▪S3
VDS3004 ▪S3
VDS3304 ▪S3
VDS3604 ▪S3
VDS3904 ▪S3
VDS4204 ▪S3
VDS4504 ▪S3
VDS4804 ▪S3
VDS5104 ▪S3
VDS5404 ▪S3
VDS5704 ▪S3
VDS6004 ▪S3

- Available in Rustic Alder, Cherry, EverCore™, Thermofoil and Maple and full overlay door styles only
- Painted hardwood supplied for EverCore™ and Thermofoil
- Solid wood front and sides stained to match or painted White or Cream
- Decorative routing at top
- Designed to fit vanity toe kick space
- If desired, matching toe kick ***must*** be ordered separately and installed before skirt

Consider using a Vanity Decorative Skirt with other cabinets to create a furniture look. Example: below a sink base or utility cabinet

APFC
FPEB
MI
DE
AD_E
RD
TWR
WR
XS
GD
RTK
VTK

Vanity Decorative Accent End Panel Bayshore Collection (S3)

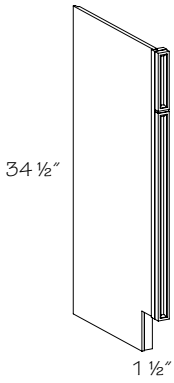

Specify R or L

DEP1834 R or L▪S3
DEP2134 R or L▪S3

- Available in Rustic Alder, Cherry, EverCore™, High-Gloss Foil, Thermofoil and Maple and full overlay door styles only
- Painted hardwood supplied for EverCore™ and Thermofoil door styles. A matching matte panel will be supplied when ordered in High-Gloss Foil door styles
- Applied decorative accent mounted toward end panel
- End panel is trimmable

● APFC
❖ FPEB
● MI
DE
AD_E
● RD
TWR
WR
XS
GD
RTK
VTK

Vanity Decorative Accent Filler Bayshore Collection (S3)

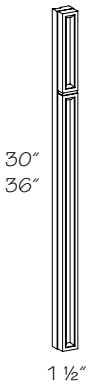

DF130 ▪S3
DF136 ▪S3

- 3/4" thick solid wood filler with applied decorative accent centered
- Available in Rustic Alder, Cherry, EverCore™, Thermofoil and Maple and full overlay door styles only
- Painted hardwood supplied for EverCore™ and Thermofoil

APFC
FPEB
MI
DE
AD_E
RD
TWR
WR
XS
GD
RTK
VTK

Prescott Collection (S4)

VCDF	60	18	34	•S4
code	width	depth	height	series

Available in full overlay door styles only.

All Decorative Accent Vanities come with a matching 1/2" plywood toe kick as standard.

Decorative Skirts add 1 5/16" to the frame width

Material dimensions listed may vary slightly from actual dimensions of the product.

Specifications subject to change without notice.

Construction Options and Modifications

❖ Included as standard
● Available with an upcharge
☆ Available with exceptions
(Blank) ***Not*** available

APFC	All Plywood Furniture Construction
FPEB	Furniture Plywood Ends
MI	Matching Interior
DE	Integrated Decorative End
AD_E	Attached Decorative End
RD	Reduced Depth
TWR	Top Wide Rail
WR	Wide Bottom Rail
XS	Extended Stile
GD	Glass Doors
RTK	Recessed Toe Kick
VTK	Void Toe Kick

Prescott Collection (S4)

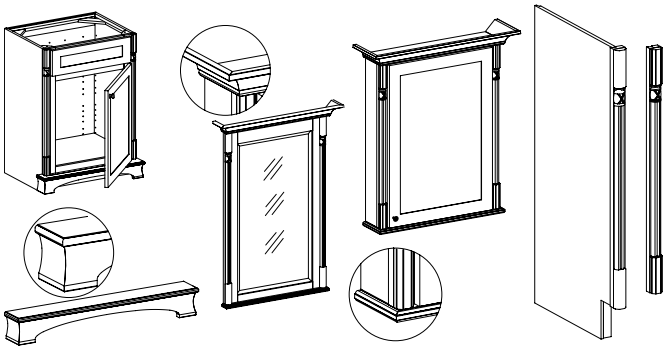

- Elegant timeless details and the curved skirt create a heritage inspired design
- Large Cove Molding (LCVM) is applied to tops of Vanity Walls and Mirrors; a solid wood plate with a single bead edge is applied to the bottom
- 1 1/2" carved ornamental side accents
- Toe kicks feature a flared valence style skirt
- Toe kick skirt ships separately for field installation
- Raised panel door styles with more details, and glazed finishes highlight the ornate features of these accents

Vanity Sink Base Single Door w/Decorative Accents Prescott Collection (S4)

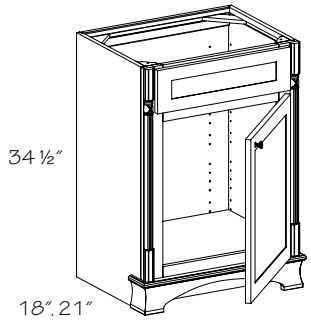

Specify R or L

34 1/2" High, 18" Deep
VSB241834 R or L▪S4

34 1/2" High, 21" Deep
VSB242134 R or L▪S4

- Single door and drawer front
- Available in Cherry, EverCore™, Thermofoil and Maple full overlay door styles only
- Painted hardwood supplied for EverCore™ and Thermofoil
- Optional Utensil Trays (UT and SUT) are available
- Optional Door Storage Unit (SBDSU) is available

●	APFC
❖	FPEB
●	MI
●	DE
●	AD_E
●	RD
●	TWR
	WR
	XS
●	GD
	RTK
	VTK

Vanity Sink Base Double Door w/Decorative Accents Prescott Collection (S4)

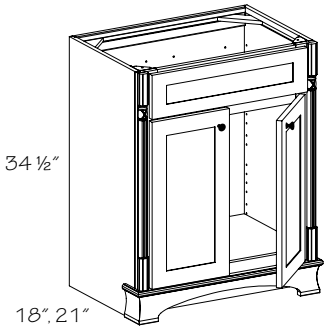

34 1/2" High, 18" Deep	*34 1/2" High, 21" Deep*
▲ **VSB271834 ▪S4**	▲ **VSB272134 ▪S4**
▲ **VSB301834 ▪S4**	▲ **VSB302134 ▪S4**
VSB331834 ▪S4	**VSB332134 ▪S4**
VSB361834 ▪S4	**VSB362134 ▪S4**
VSB391834 ▪S4	**VSB392134 ▪S4**

▲ Sink Base Door Storage Unit (SBDSU) ***not*** available

- Single drawer front
- Available in Cherry, EverCore™, Thermofoil and Maple full overlay door styles only
- Painted hardwood supplied for EverCore™ and Thermofoil
- Optional Utensil Trays (UT and SUT) are available
- Optional Door Storage Unit (SBDSU) is available
- Skirt ships separately

●	APFC
❖	FPEB
●	MI
●	DE
●	AD_E
●	RD
●	TWR
	WR
	XS
●	GD
	RTK
	VTK

Vanity Sink Base Three Drawer w/Decorative Accents Prescott Collection (S4)

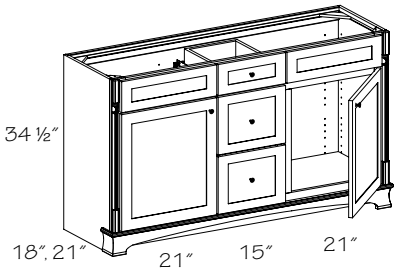

34 1/2" High, 18" Deep
VSB601834 ▪3▪S4
34 1/2" High, 21" Deep
VSB602134 ▪3▪S4

● APFC
❖ FPEB
● MI
● DE
● AD_E
● RD
● TWR
WR
XS
● GD
RTK
VTK

- Three drawer stack in center
- One standard drawer
- Two deep drawers
- Available in Cherry, EverCore™, Thermofoil and Maple full overlay door styles only
- Painted hardwood supplied for EverCore™ and Thermofoil
- Scoop Top Drawer (STDW) option available
- Optional Door Storage Unit (SBDSU) is available
- Optional Vanity Wood Tiered Drawer Storage (VWTDS), Vanity Shallow Wood Tiered Drawer Storage (VSWTDS) and Vanity Adjustable Drawer Divider (VADD) are available
- A filler is recommended when installing decorative accent vanities against a return wall. Filler is sold separately
- Skirt ships separately

Be sure to account for the 1-1/2" decorative accent on the right and left end of the face frame to ensure the sink vessel is centered over the cabinet doors on decorative collections S1 – S4. The S5 series has no side accents and no adjustments are necessary.

Vanity Sink Base Four Drawer w/Decorative Accents Prescott Collection (S4)

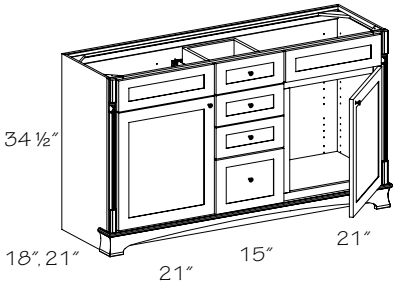

34 1/2" High, 18" Deep
VSB601834 ▪4▪S4
34 1/2" High, 21" Deep
VSB602134 ▪4▪S4

● APFC
❖ FPEB
● MI
● DE
● AD_E
● RD
● TWR
WR
XS
● GD
RTK
VTK

- Four drawer stack in center
- Three standard height drawers
- One deep drawer
- Available in Cherry, EverCore™, Thermofoil and Maple full overlay door styles only
- Painted hardwood supplied for EverCore™ and Thermofoil
- Scoop Top Drawer (STDW) option available
- Optional Door Storage Unit (SBDSU) is available
- Optional Vanity Wood Tiered Drawer Storage (VWTDS), Vanity Shallow Wood Tiered Drawer Storage (VSWTDS) and Vanity Adjustable Drawer Divider (VADD) are available
- Skirt ships separately

Vanity Combination Drawer w/Decorative Accents (2) Prescott Collection (S4)

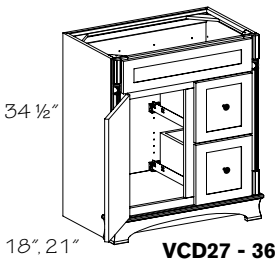

VCD27 - 36

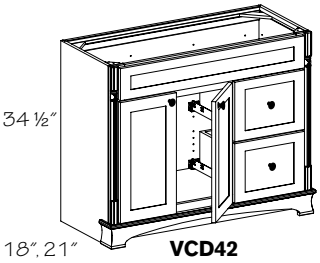

VCD42

	Drawers Left	*Drawer-Door*
	34 1/2" High, 18" Deep	
▲	**VCD271834 DL2•S4**	12"-12"
	VCD301834 DL2•S4	12"-15"
	VCD331834 DL2•S4	12"-18"
	VCD361834 DL2•S4	12"-21"
▲	**VCD421834 DL2•S4**	15"-24"
	34 1/2" High, 21" Deep	
▲	**VCD272134 DL2•S4**	12"-12"
	VCD302134 DL2•S4	12"-15"
	VCD332134 DL2•S4	12"-18"
	VCD362134 DL2•S4	12"-21"
▲	**VCD422134 DL2•S4**	15"-24"
	Drawers Right	*Door-Drawer*
	34 1/2" High, 18" Deep	
▲	**VCD271834 DR2•S4**	12"-12"
	VCD301834 DR2•S4	15"-12"
	VCD331834 DR2•S4	18"-12"
	VCD361834 DR2•S4	21"-12"
▲	**VCD421834 DR2•S4**	24"-15"
	34 1/2" High, 21" Deep	
▲	**VCD272134 DR2•S4**	12"-12"
	VCD302134 DR2•S4	15"-12"
	VCD332134 DR2•S4	18"-12"
	VCD362134 DR2•S4	21"-12"
▲	**VCD422134 DR2•S4**	24"-15"

▲ Sink Base Door Storage Unit (SBDSU) ***not*** available

- One drawer front
- Two deep drawers
- Available in Cherry, EverCore™, Thermofoil and Maple full overlay door styles only
- Painted hardwood supplied for EverCore™ and Thermofoil
- Optional Door Storage Unit (SBDSU) is available
- Optional Vanity Wood Tiered Drawer Storage (VWTDS), Vanity Shallow Wood Tiered Drawer Storage (VSWTDS) and Vanity Adjustable Drawer Divider (VADD) are available
- Skirt ships separately

●	APFC
❖	FPEB
●	MI
●	DE
●	AD_E
●	RD
●	TWR
	WR
	XS
●	GD
	RTK
	VTK

Vanity Combination Drawer w/Decorative Accents (3) Prescott Collection (S4)

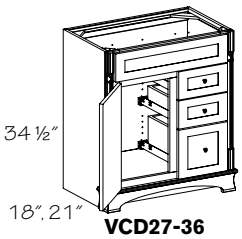

VCD27-36

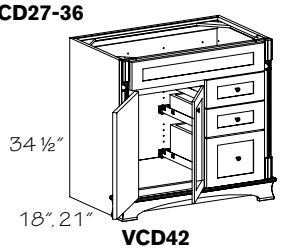

VCD42

	Drawers Left	*Drawer-Door*
	34 1/2" High, 18" Deep	
▲	**VCD271834 DL3•S4**	12"-12"
	VCD301834 DL3•S4	12"-15"
	VCD331834 DL3•S4	12"-18"
	VCD361834 DL3•S4	12"-21"
▲	**VCD421834 DL3•S4**	15"-24"
	34 1/2" High, 21" Deep	
▲	**VCD272134 DL3•S4**	12"-12"
	VCD302134 DL3•S4	12"-15"
	VCD332134 DL3•S4	12"-18"
	VCD362134 DL3•S4	12"-21"
▲	**VCD422134 DL3•S4**	15"-24"
	Drawers Right	*Door-Drawer*
	34 1/2" High, 18" Deep	
▲	**VCD271834 DR3•S4**	12"-12"
	VCD301834 DR3•S4	15"-12"
	VCD331834 DR3•S4	18"-12"
	VCD361834 DR3•S4	21"-12"
▲	**VCD421834 DR3•S4**	24"-15"
	34 1/2" High, 21" Deep	
▲	**VCD272134 DR3•S4**	12"-12"
	VCD302134 DR3•S4	15"-12"
	VCD332134 DR3•S4	18"-12"
	VCD362134 DR3•S4	21"-12"
▲	**VCD422134 DR3•S4**	24"-15"

▲ Sink Base Door Storage Unit (SBDSU) ***not*** available

- One drawer front
- Two standard drawers
- One deep drawer
- Available in Cherry, EverCore™, Thermofoil and Maple full overlay door styles only
- Painted hardwood supplied for EverCore™ and Thermofoil
- Optional Door Storage Unit (SBDSU) is available
- Optional Vanity Wood Tiered Drawer Storage (VWTDS), Vanity Shallow Wood Tiered Drawer Storage (VSWTDS) and Vanity Adjustable Drawer Divider (VADD) are available
- Skirt ships separately

●	APFC
❖	FPEB
●	MI
●	DE
●	AD_E
●	RD
●	TWR
	WR
	XS
●	GD
	RTK
	VTK

Vanity Combination Drawer w/Decorative Accents (6) Prescott Collection (S4)

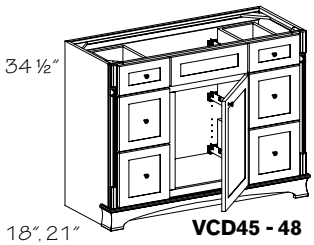

VCD45 - 48

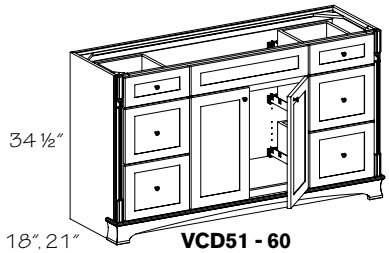

VCD51 - 60

Specify R or L	*Drawer-Door-Drawer*
34 1/2" High, 18" Deep	
VCD451834 R or L•6•S4	12"-18"-12"
VCD481834 R or L•6•S4	12"-21"-12"
VCD511834 •6•S4	12"-24"-12"
VCD541834 •6•S4	12"-27"-12"
VCD571834 •6•S4	15"-24"-15"
VCD601834 •6•S4	15"-27"-15"
34 1/2" High, 21" Deep	
VCD452134 R or L•6•S4	12"-18"-12"
VCD482134 R or L•6•S4	12"-21"-12"
VCD512134 •6•S4	12"-24"-12"
VCD542134 •6•S4	12"-27"-12"
VCD572134 •6•S4	15"-24"-15"
VCD602134 •6•S4	15"-27"-15"

- Two standard drawers
- Four deep drawers
- Available in Cherry, EverCore™, Thermofoil and Maple full overlay door styles only
- Painted hardwood supplied for EverCore™ and Thermofoil
- Scoop Top Drawer (STDW) option available
- Sink Base Door Storage Unit (SBDSU) is available on single door cabinets
- Optional Vanity Wood Tiered Drawer Storage (VWTDS), Vanity Shallow Wood Tiered Drawer Storage (VSWTDS) and Vanity Adjustable Drawer Divider (VADD) are available
- Skirt ships separately

●	APFC
❖	FPEB
●	MI
●	DE
●	AD_E
●	RD
●	TWR
	WR
	XS
●	GD
	RTK
	VTK

Vanity Combination Drawer w/Decorative Accents (8) Prescott Collection (S4)

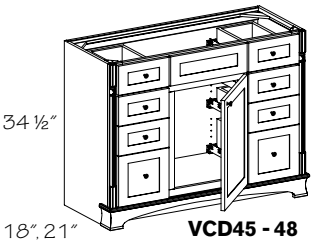

VCD45 - 48

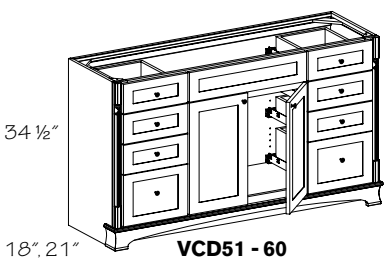

VCD51 - 60

Specify R or L	*Drawer-Door-Drawer*
34 1/2" High, 18" Deep	
VCD451834 R or L•8•S4	12"-18"-12"
VCD481834 R or L•8•S4	12"-21"-12"
VCD511834 •8•S4	12"-24"-12"
VCD541834 •8•S4	12"-27"-12"
VCD571834 •8•S4	15"-24"-15"
VCD601834 •8•S4	15"-27"-15"
34 1/2" High, 21" Deep	
VCD452134 R or L•8•S4	12"-18"-12"
VCD482134 R or L•8•S4	12"-21"-12"
VCD512134 •8•S4	12"-24"-12"
VCD542134 •8•S4	12"-27"-12"
VCD572134 •8•S4	15"-24"-15"
VCD602134 •8•S4	15"-27"-15"

- Six standard drawers
- Two deep drawers
- Available in Cherry, EverCore™, Thermofoil and Maple full overlay door styles only
- Painted hardwood supplied for EverCore™ and Thermofoil
- Scoop Top Drawer (STDW) option available
- Sink Base Door Storage Unit (SBDSU) is available on single door cabinets
- Optional Vanity Wood Tiered Drawer Storage (VWTDS), Vanity Shallow Wood Tiered Drawer Storage (VSWTDS) and Vanity Adjustable Drawer Divider (VADD) are available
- Skirt ships separately

●	APFC
❖	FPEB
●	MI
●	DE
●	AD_E
●	RD
●	TWR
	WR
	XS
●	GD
	RTK
	VTK

Vanity Combination Drawer w/Decorative Accents–Full False Front (4) Prescott Collection (S4)

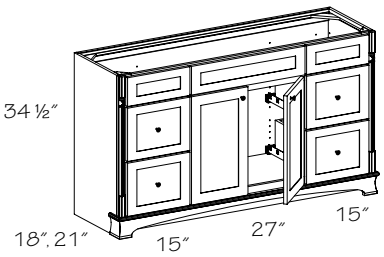

34 1/2" High, 18" Deep
VCDF601834 ▪4▪S4
34 1/2" High, 21" Deep
VCDF602134 ▪4▪S4

- Three drawer fronts
- Four deep drawers
- Available in Cherry, EverCore™, Thermofoil and Maple full overlay door styles only
- Painted hardwood supplied for EverCore™ and Thermofoil
- Optional Vanity Wood Tiered Drawer Storage (VWTDS), Vanity Shallow Wood Tiered Drawer Storage (VSWTDS) and Vanity Adjustable Drawer Divider (VADD) are available
- Skirt ships separately

Tip: False fronts across the entire width of the cabinet allows design flexibility for single or double sink bowls

● APFC
❖ FPEB
● MI
● DE
● AD_E
● RD
● TWR
WR
XS
● GD
RTK
VTK

Vanity Combination Drawer w/Decorative Accents–Full False Front (6) Prescott Collection (S4)

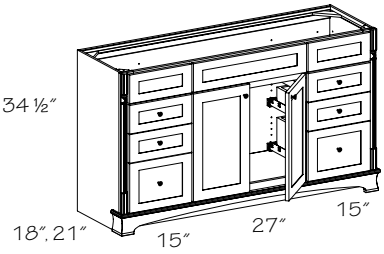

34 1/2" High, 18" Deep
VCDF601834 ▪6▪S4
34 1/2" High, 21" Deep
VCDF602134 ▪6▪S4

- Three drawer fronts
- Four standard drawers
- Two deep drawers
- Available in Cherry, EverCore™, Thermofoil and Maple full overlay door styles only
- Painted hardwood supplied for EverCore™ and Thermofoil
- Optional Vanity Wood Tiered Drawer Storage (VWTDS), Vanity Shallow Wood Tiered Drawer Storage (VSWTDS) and Vanity Adjustable Drawer Divider (VADD) are available
- Skirt ships separately

● APFC
❖ FPEB
● MI
● DE
● AD_E
● RD
● TWR
WR
XS
● GD
RTK
VTK

Vanity Wall Cabinet w/Decorative Accents Prescott Collection (S4)

VW24

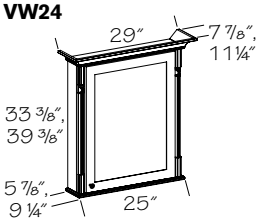

VW27

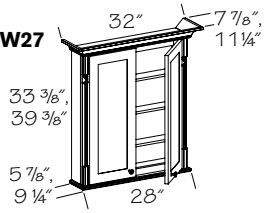

Specify R or L
5 7/8" Deep, 30" High
VW240430 R or L▪S4
VW270430 ▪S4
36" High
VW240436 R or L▪S4
VW270436 ▪S4
9 1/4" Deep, 30" High
VW240830 R or L▪S4
VW270830 ▪S4
36" High
VW240836 R or L▪S4
VW270836 ▪S4

- Available in Cherry, EverCore™, Thermofoil and Maple full overlay door styles only
- Painted hardwood supplied for EverCore™ and Thermofoil
- Top and bottom plates ship separately

● APFC
❖ FPEB
● MI
DE
AD_E
RD
TWR
WR
● XS
● GD
RTK
VTK

Framed Mirror w/Decorative Accents Prescott Collection (S4)

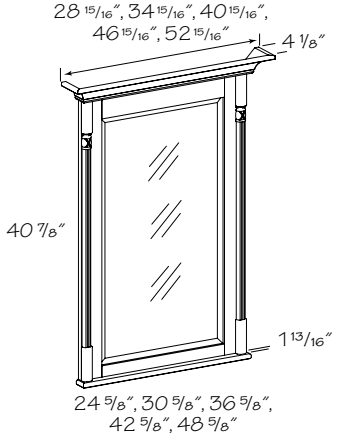

FM2436 ▪S4
FM3036 ▪S4
FM3636 ▪S4
FM4236 ▪S4
FM4836 ▪S4

- Beveled mirror
- Available in Cherry, EverCore™, Thermofoil and Maple full overlay door styles only
- Painted hardwood supplied for EverCore™ and Thermofoil

APFC
FPEB
MI
DE
AD_E
RD
TWR
WR
XS
GD
RTK
VTK

Vanity Decorative Skirt w/Decorative Accents Prescott Collection (S4)

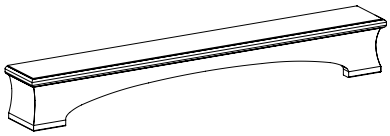

VDS1504 ▪S4
VDS1804 ▪S4
VDS2104 ▪S4
VDS2404 ▪S4
VDS2704 ▪S4
VDS3004 ▪S4
VDS3304 ▪S4
VDS3604 ▪S4
VDS3904 ▪S4
VDS4204 ▪S4
VDS4504 ▪S4
VDS4804 ▪S4
VDS5104 ▪S4
VDS5404 ▪S4
VDS5704 ▪S4
VDS6004 ▪S4
VDS6304 ▪S4
VDS6604 ▪S4
VDS6904 ▪S4
VDS7204 ▪S4

- Available in Cherry, EverCore™, Thermofoil and Maple full overlay door styles only
- Painted hardwood supplied for EverCore™ and Thermofoil
- Solid wood front and sides stained to match or painted White or Cream
- Decorative routing at top
- Designed to fit vanity toe kick space
- If desired, matching toe kick ***must*** be ordered separately and installed before skirt

Consider using a Vanity Decorative Skirt with other cabinets to create a furniture look. Example: below a sink base or utility cabinet

APFC
FPEB
MI
DE
AD_E
RD
TWR
WR
XS
GD
RTK
VTK

Vanity Decorative Accent End Panel Prescott Collection (S4)

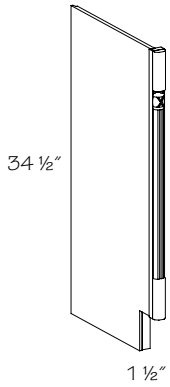

Specify R or L
DEP1834 R or L▪S4
DEP2134 R or L▪S4

- Available in Cherry, EverCore™, High-Gloss Foil, Thermofoil and Maple full overlay door styles only
- Painted hardwood supplied for EverCore™ and Thermofoil door styles. A matching matte panel will be supplied when ordered in High-Gloss Foil door styles
- Applied decorative accent mounted toward end panel
- End panel is trimmable

● APFC
❖ FPEB
● MI
DE
AD_E
● RD
TWR
WR
XS
GD
RTK
VTK

Vanity Decorative Accent Filler Prescott Collection (S4)

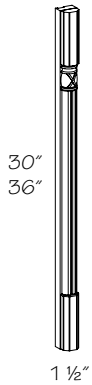

DF130 ▪S4
DF136 ▪S4

- 3/4" thick solid wood filler with applied decorative accent centered
- Available in Cherry, EverCore™, Thermofoil and Maple full overlay door styles only
- Painted hardwood supplied for EverCore™ and Thermofoil

APFC
FPEB
MI
DE
AD_E
RD
TWR
WR
XS
GD
RTK
VTK

Fairfield Collection (S5)

VCDF	60	18	34	•S5
code	width	depth	height	series

Available in full overlay door styles only.

All Decorative Accent Vanities come with a matching 1/2" plywood toe kick as standard.

Decorative Skirts add 1 5/16" to the frame width

Material dimensions listed may vary slightly from actual dimensions of the product.

Specifications subject to change without notice.

Construction Options and Modifications

❖ Included as standard
● Available with an upcharge
☆ Available with exceptions
(Blank) ***Not*** available

APFC	All Plywood Furniture Construction
FPEB	Furniture Plywood Ends
MI	Matching Interior
DE	Integrated Decorative End
AD_E	Attached Decorative End
RD	Reduced Depth
TWR	Top Wide Rail
WR	Wide Bottom Rail
XS	Extended Stile
GD	Glass Doors
RTK	Recessed Toe Kick
VTK	Void Toe Kick

Fairfield Collection (S5)

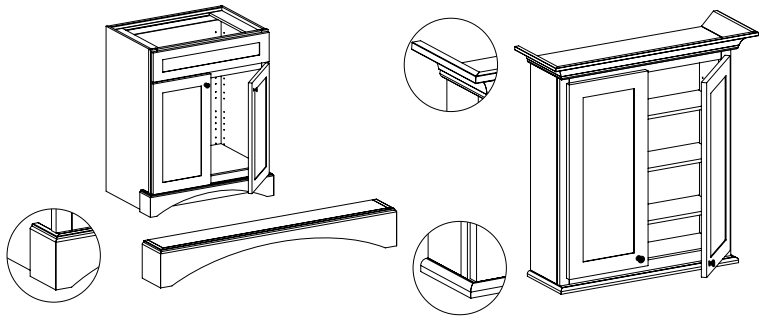

- The clean lines and cove valance give this collection universal appeal
- Large Cove Molding (LCVM) is applied to tops of Vanity Walls and Mirrors; a solid wood plate with a single bead edge is applied to the bottom
- FM.LCVM is correct framed mirror to use when matching this series
- No side accents
- Toe kicks feature a simple, yet sophisticated cove skirt
- Toe kick skirt ships separately for field installation
- For an uncomplicated look, choose door styles with a recessed center panel in a simple stained finish; or for a more refined or elegant appearance, select raised panel door styles and use a glazed finish to highlight the details

Vanity Sink Base Double Door w/Decorative Accents Fairfield Collection (S5)

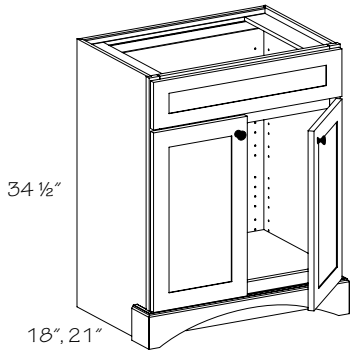

34 1/2" High, 18" Deep	*34 1/2" High, 21" Deep*
▲ **VSB241834 •S5**	▲ **VSB242134 •S5**
▲ **VSB271834 •S5**	▲ **VSB272134 •S5**
VSB301834 •S5	**VSB302134 •S5**
VSB331834 •S5	**VSB332134 •S5**
VSB361834 •S5	**VSB362134 •S5**
❄ **VSB391834 •S5**	❄ **VSB392134 •S5**

▲ Sink Base Door Storage Unit (SBDSU) ***not*** available
❄ 3" center stile

- Single drawer front
- Available in Cherry, EverCore™, Thermofoil and Maple full overlay door styles only
- Painted hardwood supplied for EverCore™ and Thermofoil
- Optional Utensil Trays (UT and SUT) are available
- Optional Door Storage Unit (SBDSU) is available
- Skirt ships separately

●	APFC
❖	FPEB
●	MI
●	DE
●	AD_E
●	RD
●	TWR
	WR
	XS
●	GD
	RTK
	VTK

Vanity Sink Base Three Drawer w/Decorative Accents Fairfield Collection (S5)

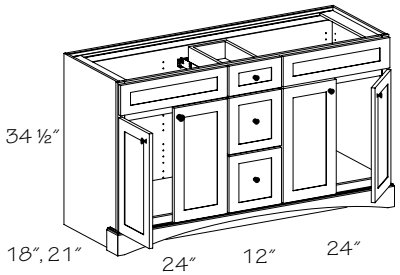

34 1/2" High, 18" Deep
VSB601834 •3•S5
34 1/2" High, 21" Deep
VSB602134 •3•S5

- Three drawer stack in center
- One standard drawer
- Two deep drawers
- Available in Cherry, EverCore™, Thermofoil and Maple full overlay door styles only
- Painted hardwood supplied for EverCore™ and Thermofoil
- Scoop Top Drawer (STDW) option available
- Sink Base Door Storage Unit (SBDSU) ***not*** available
- Optional Vanity Wood Tiered Drawer Storage (VWTDS), Vanity Shallow Wood Tiered Drawer Storage (VSWTDS) and Vanity Adjustable Drawer Divider (VADD) are available
- Skirt ships separately

●	APFC
❖	FPEB
●	MI
●	DE
●	AD_E
●	RD
●	TWR
	WR
	XS
●	GD
	RTK
	VTK

Vanity Sink Base Four Drawer w/Decorative Accents Fairfield Collection (S5)

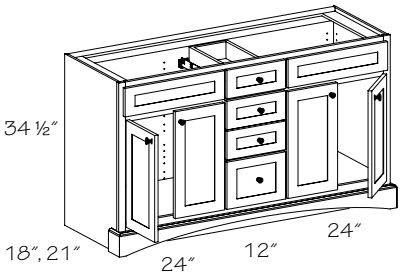

34 1/2" High, 18" Deep
VSB601834 ▪4▪S5
34 1/2" High, 21" Deep
VSB602134 ▪4▪S5

- Four drawer stack in center
- Three standard height drawers
- One deep drawer
- Available in Cherry, EverCore™, Thermofoil and Maple full overlay door styles only
- Painted hardwood supplied for EverCore™ and Thermofoil
- Scoop Top Drawer (STDW) option available
- Sink Base Door Storage Unit (SBDSU) ***not*** available
- Optional Vanity Wood Tiered Drawer Storage (VWTDS), Vanity Shallow Wood Tiered Drawer Storage (VSWTDS) and Vanity Adjustable Drawer Divider (VADD) are available
- Skirt ships separately

● APFC
❖ FPEB
● MI
● DE
AD_E
● RD
● TWR
WR
XS
● GD
RTK
VTK

Vanity Combination Drawer w/Decorative Accents (2) Fairfield Collection (S5)

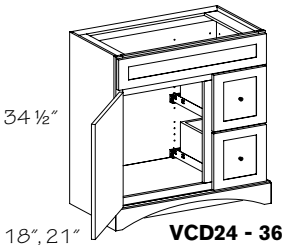

VCD24 - 36

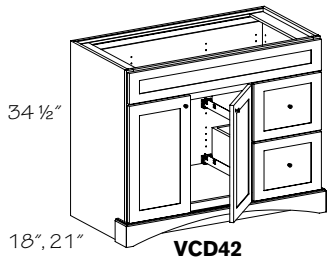

VCD42

Drawers Left	*Drawer-Door*
34 1/2" High, 18" Deep	
▲ **VCD241834 DL2▪S5**	12″-12″
▲ **VCD271834 DL2▪S5**	12″-15″
VCD301834 DL2▪S5	12″-18″
VCD331834 DL2▪S5	12″-21″
VCD361834 DL2▪S5	15″-21″
▲ **VCD421834 DL2▪S5**	15″-27″
34 1/2" High, 21" Deep	
▲ **VCD242134 DL2▪S5**	12″-12″
▲ **VCD272134 DL2▪S5**	12″-15″
VCD302134 DL2▪S5	12″-15″
VCD332134 DL2▪S5	12″-21″
VCD362134 DL2▪S5	15″-21″
▲ **VCD422134 DL2▪S5**	15″-27″
Drawers Right	*Door-Drawer*
34 1/2" High, 18" Deep	
▲ **VCD241834 DR2▪S5**	12″-12″
▲ **VCD271834 DR2▪S5**	15″-12″
VCD301834 DR2▪S5	18″-12″
VCD331834 DR2▪S5	21″-12″
VCD361834 DR2▪S5	21″-15″
▲ **VCD421834 DR2▪S5**	27″-15″
34 1/2" High, 21" Deep	
▲ **VCD242134 DR2▪S5**	12″-12″
▲ **VCD272134 DR2▪S5**	12″-12″
VCD302134 DR2▪S5	18″-12″
VCD332134 DR2▪S5	21″-12″
VCD362134 DR2▪S5	21″-15″
▲ **VCD422134 DR2▪S5**	27″-15″

▲ Sink Base Door Storage Unit (SBDSU) ***not*** available

- One drawer front
- Two deep drawers
- Available in Cherry, EverCore™, Thermofoil and Maple full overlay door styles only
- Painted hardwood supplied for EverCore™ and Thermofoil
- Optional Door Storage Unit (SBDSU) is available
- Optional Vanity Wood Tiered Drawer Storage (VWTDS), Vanity Shallow Wood Tiered Drawer Storage (VSWTDS) and Vanity Adjustable Drawer Divider (VADD) are available
- Skirt ships separately

● APFC
❖ FPEB
● MI
● DE
● AD_E
● RD
● TWR
WR
XS
● GD
RTK
VTK

Vanity Combination Drawer w/Decorative Accents (3) Fairfield Collection (S5)

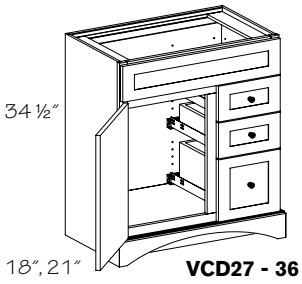

VCD27 - 36

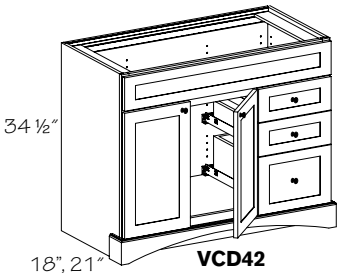

VCD42

Drawers Left	*Drawer-Door*
34 1/2" High, 18" Deep	
▲ **VCD271834 DL3•S5**	12″-15″
VCD301834 DL3•S5	12″-18″
VCD331834 DL3•S5	12″-21″
VCD361834 DL3•S5	15″-21″
▲ **VCD421834 DL3•S5**	15″-27″
34 1/2" High, 21" Deep	
▲ **VCD272134 DL3•S5**	12″-15″
VCD302134 DL3•S5	12″-18″
VCD332134 DL3•S5	12″-21″
VCD362134 DL3•S5	15″-21″
▲ **VCD422134 DL3•S5**	15″-27″
Drawers Right	*Door-Drawer*
34 1/2" High, 18" Deep	
▲ **VCD271834 DR3•S5**	12″-15″
VCD301834 DR3•S5	18″-12″
VCD331834 DR3•S5	21″-12″
VCD361834 DR3•S5	21″-15″
▲ **VCD421834 DR3•S5**	27″-15″
34 1/2" High, 21" Deep	
▲ **VCD272134 DR3•S5**	12″-15″
VCD302134 DR3•S5	18″-12″
VCD332134 DR3•S5	21″-12″
VCD362134 DR3•S5	21″-15″
▲ **VCD422134 DR3•S5**	27″-15″

▲ Sink Base Door Storage Unit (SBDSU) ***not*** available

- One drawer front
- Two standard drawers
- One deep drawer
- Available in Cherry, EverCore™, Thermofoil and Maple full overlay door styles only
- Painted hardwood supplied for EverCore™ and Thermofoil
- Optional Door Storage Unit (SBDSU) is available
- Optional Vanity Wood Tiered Drawer Storage (VWTDS), Vanity Shallow Wood Tiered Drawer Storage (VSWTDS) and Vanity Adjustable Drawer Divider (VADD) are available
- Skirt ships separately

●	APFC
❖	FPEB
●	MI
●	DE
●	AD_E
●	RD
●	TWR
	WR
	XS
●	GD
	RTK
	VTK

Vanity Combination Drawer w/Decorative Accents (6) Fairfield Collection (S5)

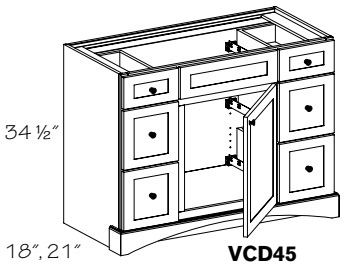

VCD45

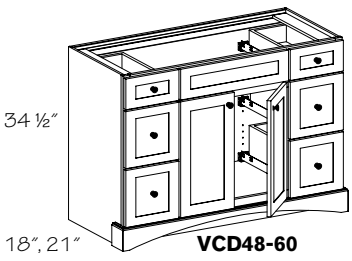

VCD48-60

Specify R or L	*Drawer-Door-Drawer*
34 1/2" High, 18" Deep	
VCD451834 R or L•6•S5	12″-21″-12″
VCD481834 •6•S5	12″-24″-12″
VCD511834 •6•S5	12″-27″-12″
VCD541834 •6•S5	15″-24″-15″
VCD571834 •6•S5	15″-27″-15″
VCD601834 •6•S5	15″-30″-15″
34 1/2" High, 21" Deep	
VCD452134 R or L•6•S5	12″-21″-12″
VCD482134 •6•S5	12″-24″-12″
VCD512134 •6•S5	12″-27″-12″
VCD542134 •6•S5	15″-24″-15″
VCD572134 •6•S5	15″-27″-15″
VCD602134 •6•S5	15″-30″-15″

- Two standard drawers
- Four deep drawers
- Available in Cherry, EverCore™, Thermofoil and Maple full overlay door styles only
- Painted hardwood supplied for EverCore™ and Thermofoil
- Scoop Top Drawer (STDW) option available
- Sink Base Door Storage Unit (SBDSU) is available on single door cabinets
- Optional Vanity Wood Tiered Drawer Storage (VWTDS), Vanity Shallow Wood Tiered Drawer Storage (VSWTDS) and Vanity Adjustable Drawer Divider (VADD) are available
- Skirt ships separately

●	APFC
❖	FPEB
●	MI
●	DE
●	AD_E
●	RD
●	TWR
	WR
	XS
●	GD
	RTK
	VTK

Vanity Combination Drawer w/Decorative Accents (8) Fairfield Collection (S5)

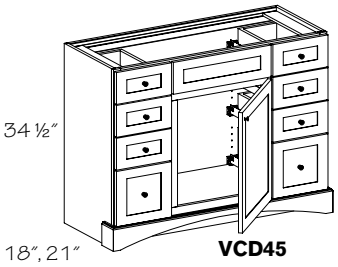

VCD45

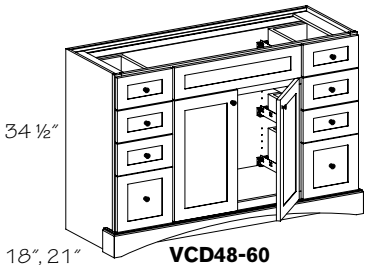

VCD48-60

Specify R or L	*Door-Drawer-Door*
34 1/2″ High, 18″ Deep	
VCD451834 R or L▪8▪S5	12″-21″-12″
VCD481834 ▪8▪S5	12″-24″-12″
VCD511834 ▪8▪S5	12″-27″-12″
VCD541834 ▪8▪S5	15″-24″-15″
VCD571834 ▪8▪S5	15″-27″-15″
VCD601834 ▪8▪S5	15″-30″-15″
34 1/2″ High, 21″ Deep	
VCD452134 R or L▪8▪S5	12″-21″-12″
VCD482134 ▪8▪S5	12″-24″-12″
VCD512134 ▪8▪S5	12″-27″-12″
VCD542134 ▪8▪S5	15″-24″-15″
VCD572134 ▪8▪S5	15″-27″-15″
VCD602134 ▪8▪S5	15″-30″-15″

- Six standard drawers
- Two deep drawers
- Available in Cherry, EverCore™, Thermofoil and Maple full overlay door styles only
- Painted hardwood supplied for EverCore™ and Thermofoil
- Scoop Top Drawer (STDW) option available
- Sink Base Door Storage Unit (SBDSU) is available on single door cabinets
- Optional Vanity Wood Tiered Drawer Storage (VWTDS), Vanity Shallow Wood Tiered Drawer Storage (VSWTDS) and Vanity Adjustable Drawer Divider (VADD) are available
- Skirt ships separately

●	APFC
❖	FPEB
●	MI
●	DE
●	AD_E
●	RD
●	TWR
	WR
	XS
●	GD
	RTK
	VTK

Vanity Combination Drawer w/Decorative Accents–Full False Front (4) Fairfield Collection (S5)

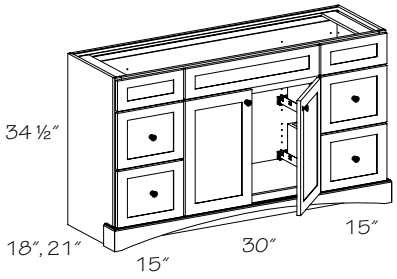

34 1/2″ High, 18″ Deep
VCDF601834 ▪4▪S5
34 1/2″ High, 21″ Deep
VCDF602134 ▪4▪S5

- Three drawer fronts
- Four deep drawers
- Available in Cherry, EverCore™, Thermofoil and Maple full overlay door styles only
- Painted hardwood supplied for EverCore™ and Thermofoil
- Optional Door Storage Unit (SBDSU) is available
- Optional Vanity Wood Tiered Drawer Storage (VWTDS), Vanity Shallow Wood Tiered Drawer Storage (VSWTDS) and Vanity Adjustable Drawer Divider (VADD) are available
- Skirt ships separately

●	APFC
❖	FPEB
●	MI
●	DE
●	AD_E
●	RD
●	TWR
	WR
	XS
●	GD
	RTK
	VTK

Tip: False fronts across the entire width of the cabinet allows design flexibility for single or double sink bowls

Vanity Combination Drawer w/Decorative Accents–Full False Front (6) Fairfield Collection (S5)

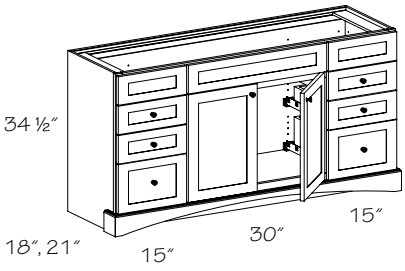

34 1/2″ High, 18″ Deep
VCDF601834 ▪6▪S5
34 1/2″ High, 21″ Deep
VCDF602134 ▪6▪S5

- Three drawer fronts
- Four standard drawers
- Two deep drawers
- Available in Cherry, EverCore™, Thermofoil and Maple full overlay door styles only
- Painted hardwood supplied for EverCore™ and Thermofoil
- Optional Door Storage Unit (SBDSU) is available
- Optional Vanity Wood Tiered Drawer Storage (VWTDS), Vanity Shallow Wood Tiered Drawer Storage (VSWTDS) and Vanity Adjustable Drawer Divider (VADD) are available
- Skirt ships separately

●	APFC
❖	FPEB
●	MI
●	DE
●	AD_E
●	RD
●	TWR
	WR
	XS
●	GD
	RTK
	VTK

Vanity Wall Cabinet w/Decorative Accents Fairfield Collection (S5)

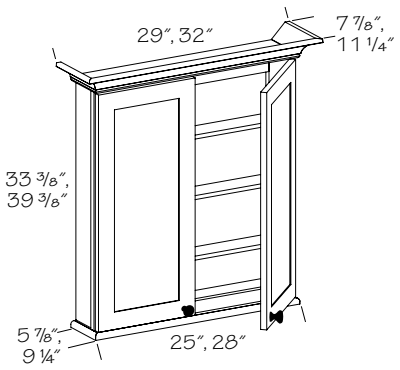

5 7/8" Deep, 30" High

VW240430 ▪S5

VW270430 ▪S5

36" High

VW240436 ▪S5

VW270436 ▪S5

9 1/4" Deep, 30" High

VW240830 ▪S5

VW270830 ▪S5

36" High

VW240836 ▪S5

VW270836 ▪S5

- Available in Cherry, EverCore™, Thermofoil and Maple full overlay door styles only
- Painted hardwood supplied for EverCore™ and Thermofoil
- Top and bottom plates ship separately

●	APFC
❖	FPEB
●	MI
	DE
	AD_E
	RD
	TWR
	WR
●	XS
●	GD
	RTK
	VTK

Vanity Decorative Skirt w/Decorative Accents Fairfield Collection (S5)

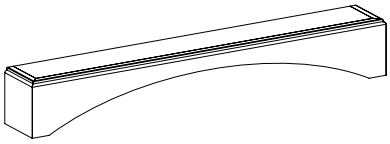

VDS1504 ▪S5
VDS1804 ▪S5
VDS2104 ▪S5
VDS2404 ▪S5
VDS2704 ▪S5
VDS3004 ▪S5
VDS3304 ▪S5
VDS3604 ▪S5
VDS3904 ▪S5
VDS4204 ▪S5
VDS4504 ▪S5
VDS4804 ▪S5
VDS5104 ▪S5
VDS5404 ▪S5
VDS5704 ▪S5
VDS6004 ▪S5
VDS6304 ▪S5
VDS6604 ▪S5
VDS6904 ▪S5
VDS7204 ▪S5

- Available in Cherry, EverCore™, Thermofoil and Maple full overlay door styles only
- Painted hardwood supplied for EverCore™ and Thermofoil
- Solid wood front and sides stained to match or painted White or Cream
- Decorative routing at top
- Designed to fit vanity toe kick space
- If desired, matching toe kick ***must*** be ordered separately and installed before skirt

	APFC
	FPEB
	MI
	DE
	AD_E
	RD
	TWR
	WR
	XS
	GD
	RTK
	VTK



Consider using a Vanity Decorative Skirt with other cabinets to create a furniture look. Example: below a sink base or utility cabinet

Vanity Cabinet Accessories

VCTP	18	12
code	width	depth

Material dimensions listed may vary slightly from actual dimensions of the product.

Specifications subject to change without notice.

Construction Options and Modifications

- ❖ Included as standard
- ● Available with an upcharge
- ☆ Available with exceptions
- (Blank) ***Not*** available

PE	Plywood Ends
APC	All Plywood Construction
APFC	All Plywood Furniture Construction
FPEB	Furniture Plywood Ends
MI	Matching Interior
CW	Change Width
RD	Reduced Depth
CH	Change Height
WR	Wide Bottom Rail
VTK	Void Toe Kick

Vanity Shallow Wood Tiered Drawer Storage

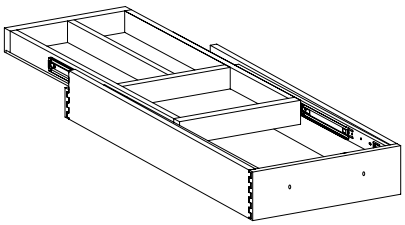

Factory Installed	*Kit*
1VSWTDS	**VSWTDSK1218**
2VSWTDS	**VSWTDSK1518**
4VSWTDS	**VSWTDSK1818**
	VSWTDSK1221
	VSWTDSK1521
	VSWTDSK1821

- Installed in the top drawer of most cabinets. Please refer to Factory Installed Vanity Drawer accessory configuration chart
- Sliding top tray
- Fits 12"-18" wide 4" deep vanity drawers
- Order Example: VCD54-1VWTDS

PE APC APFC FPEB MI CW RD CH WR VTK

Vanity Wood Tiered Drawer Storage

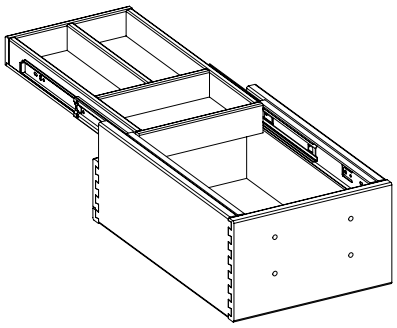

Factory Installed	*Kit*
1VWTDS	**VWTDSK1218**
2VWTDS	**VWTDSK1518**
4VWTDS	**VWTDSK1818**
	VWTDSK1221
	VWTDSK1521
	VWTDSK1821

- Installed in middle drawer of most cabinets with 2 deep drawers. Please refer to Factory Installed Vanity Drawer accessory configuration chart
- Sliding top tray
- Fits 12"- 18" wide 7" deep vanity drawers
- Order Example: VCD36-1VWTDS

PE APC APFC FPEB MI CW RD CH WR VTK

Vanity Adjustable Drawer Dividers

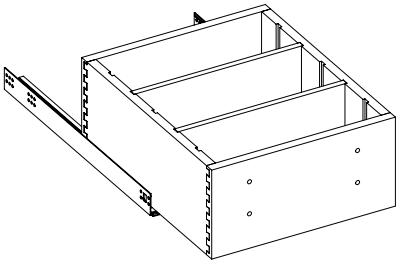

Factory Installed

1VADD
2VADD
4VADD

Single Replacement Dividers Only

VADDIV12 ▪7	12" Wide 7" High Drawers
VADDIV15 ▪7	15" Wide 7" High Drawers
VADDIV18 ▪7	18" Wide 7" High Drawers
VADDIV21 ▪7	21" Wide 7" High Drawers
VADDIV24 ▪7	24" Wide 7" High Drawers

- Installed in bottom drawer of most cabinets with 2 deep drawers. Please refer to Factory Installed Vanity Drawer accessory configuration chart
- Two dividers and four available slots standard on 18" deep cabinets
- Two dividers and five available slots standard on 21" deep cabinets
- Dividers are 1/2" thick and can be spaced to preference
- Fits 12"- 24" wide vanity drawers
- Order Example: VCD36-1VADD

PE APC APFC FPEB MI CW RD CH WR VTK

New

Non-slip drawer liner

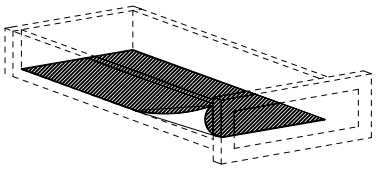

21" Deep cabinets
9" Wide

NSDLK921 For Vanity depth 9" drawer

12" Wide

NSDLK1221 For Vanity depth 12" drawer

15" Wide

NSDLK1521 For Vanity depth 15" drawer

18" Wide

NSDLK1821 For Vanity depth 18" drawer

21" Wide

NSDLK2121 For Vanity depth 21" drawer

24" Wide

NSDLK2421 For Vanity depth 24" drawer

27" Wide

NSDLK2721 For Vanity depth 27" drawer

30" Wide

NSDLK3021 For Vanity depth 30" drawer

33" Wide

NSDLK3321 For Vanity depth 33" drawer

36" Wide

NSDLK3621 For Vanity depth 36" drawer

Field Trim

NSDLR Roll-60" wide - Field trim to fit

- Textured translucent lining to help prevent movement of items placed inside drawers
- Liners to not adhere to the drawer floor
- Available cut to size, see available options
- Also available as a roll (60" x 23 5/8")
- Field installation only
- Liners sold individually

PE
APC
APFC
FPEB
MI
CW
RD
CH
WR
VTK

Grey color coding indicates new product, size or code.

Vanity Drawer Divider

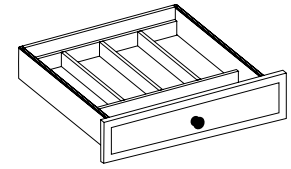

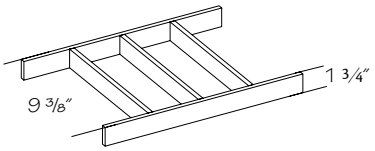

VDDK12 2 Sections
VDDK15 3 Sections
VDDK18 3 Sections
VDDK21 4 Sections
VDDK24 4 Sections
VDDK27 5 Sections
VDDK30 5 Sections
VDDK33 6 Sections
VDDK36 7 Sections

- 1/2" thick solid wood dividers 1 3/4" high

PE
APC
APFC
FPEB
MI
CW
RD
CH
WR
VTK

Vanity Drawer Storage Kit

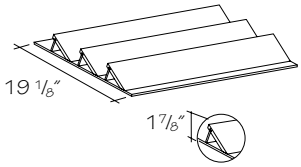

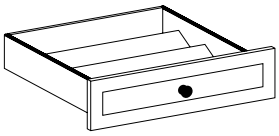

VDRSK1218
VDRSK1518
VDRSK1221
VDRSK1521

- 18" deep has two racks

PE
APC
APFC
FPEB
MI
CW
RD
CH
WR
VTK

Vanity Storage Rack Kit

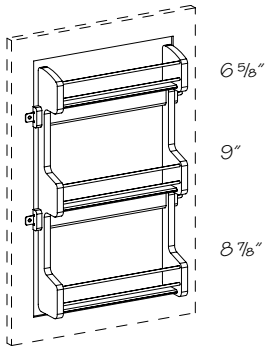

VSRK15
VSRK18
VSRK21

- For use in Vanity Full-Height Cabinets (VC) and Vanity Linen Cabinets (VLC). Requires 21 1/2 minimum height inside frame opening unless trimmed in field

PE
APC
APFC
FPEB
MI
CW
RD
CH
WR
VTK

Hamper Kit

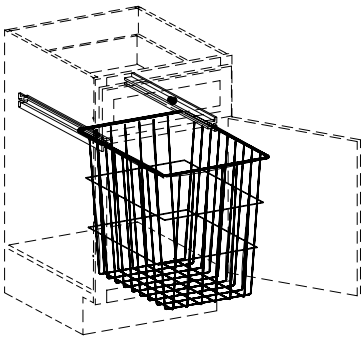

HK15 11" W x 17" H x 19" D
HK18 14" W x 17" H x 19" D

- One hamper, two runners
- Field installation only

PE
APC
APFC
FPEB
MI
CW
RD
CH
WR
VTK

Vanity Filler Pull-out Replacement Trays

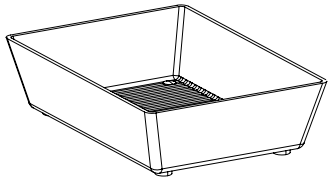

VFPT3
VFPT6

- Includes two clear plastic trays

PE
APC
APFC
FPEB
MI
CW
RD
CH
WR
VTK

Vanity Filler

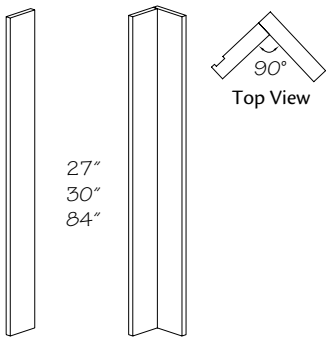

VF **VF3x3**

VF3 ▪31
VF6 ▪31
VF3 ▪34
VF6 ▪34
VF3 ▪88
VF6 ▪88
VF3X3 ▪31
VF3X3 ▪34

- 3/4" thick solid wood
- Finished one side only
- Crafted or Quartersawn door styles will be supplied in plain sawn wood
- Painted hardwood supplied for EverCore™
- Painted or Stained hardwood supplied for Wood-Grain Foil door styles
- No toe kick

Remember to use fillers with full overlay door styles, especially square edge profiles, when cabinets will be against a return wall, box, pilaster or column. Use fillers on all overlays if there is case molding on a return wall. This will ensure proper clearance for drawers and roll-out tray access.

PE
APC
APFC
FPEB
MI
CW
RD
CH
WR
VTK

Vanity Filler Overlay

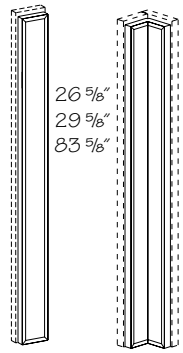

VFOL VFOL3x3

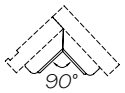

Top View

VFOL3 ▪31
VFOL6 ▪31
VFOL3 ▪34
VFOL6 ▪34
VFOL3 ▪88
VFOL6 ▪88

▲ VFOL3X3 ▪31
▲ VFOL3X3 ▪34
❄ VFOL3 ▪88▪FH
❄ VFOL6 ▪88▪FH

▲ Shipped as two pieces in Thermofoil and Wood-Grain Foil door styles. ***Must*** be field trimmed and mitered

❄ ***Not*** available in Thermofoil or Wood-Grain Foil door styles; available in High-Gloss Foil door styles

- Available in full overlay door styles only
- Available in High-Gloss Foils finish except in 3X3 models
- Filler overlay has routed door profile and is made from the same material as doors and drawer fronts
- Filler ordered separately

PE
APC
APFC
FPEB
MI
CW
RD
CH
WR
VTK

Vanity Inside Corner Angle Filler

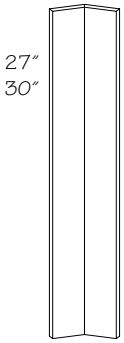

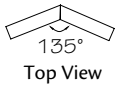

Top View

ICAF27
ICAF30

- 3/4" thick solid wood
- Crafted or Quartersawn door styles will be supplied in plain sawn wood
- Painted or Stained hardwood supplied for Wood-Grain Foil door styles
- Finished one side only
- ***Not*** available in Thermofoil door styles

PE
APC
APFC
FPEB
MI
CW
RD
CH
WR
VTK

Vanity Inside Corner Angle Filler Overlay

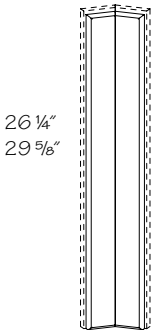

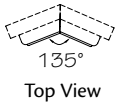

Top View

ICAFOL27
ICAFOL30

- 3/4" thick solid wood
- Available in full overlay door styles only
- Filler overlay has routed door profile and is made from the same material as doors and drawer fronts
- Filler ordered separately
- Shipped as two pieces
- ***Not*** available in Thermofoil door styles

PE
APC
APFC
FPEB
MI
CW
RD
CH
WR
VTK

Vanity Furniture Filler

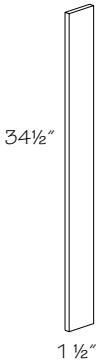

VF134 ▪FH

- 3/4" thick solid wood
- Available in Cherry, EverCore™, Thermofoil, Maple and Wood-Grain Foil door styles only
- Painted hardwood supplied for EverCore™ and Thermofoil
- Painted or Stained hardwood supplied for Wood-Grain Foil door styles
- Finished on side and edge
- No toe kick
- Intended for Decorative Accent Vanity collections

PE
APC
APFC
FPEB
MI
CW
RD
CH
WR
VTK

Remember to use a Vanity Furniture Filler when placing a decorative accent vanity against a wall (3/4") or when placing two decorative accent vanities together (1 1/2"). This will ensure proper placement and avoid any decorative skirt interference during installation.

Vanity Fluted Filler

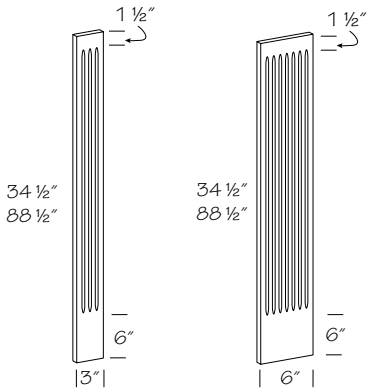

VFF3 ▪34
VFF6 ▪34
VFF3 ▪88
VFF6 ▪88

- 3/4" thick solid wood
- Painted hardwood supplied for EverCore™ and Thermofoil
- Painted or Stained hardwood supplied for Wood-Grain Foil door styles
- ***Not*** available in Morristown; Melrose and Putnam supplied plain sawn

PE
APC
APFC
FPEB
MI
CW
RD
CH
WR
VTK

Plain Capital Vanity Fluted Filler

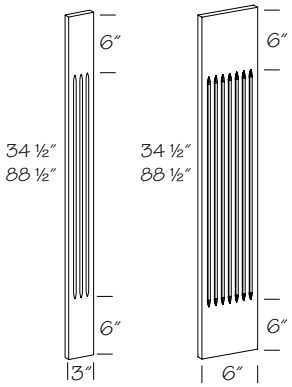

PCVFF3 ▪34
PCVFF6 ▪34
PCVFF3 ▪88
PCVFF6 ▪88

- 3/4" thick solid wood
- Painted hardwood supplied for EverCore™ and Thermofoil
- Painted or Stained hardwood supplied for Wood-Grain Foil door styles
- ***Not*** available in Morristown; Melrose and Putnam supplied plain sawn

PE
APC
APFC
FPEB
MI
CW
RD
CH
WR
VTK

Rosette Vanity Fluted Filler

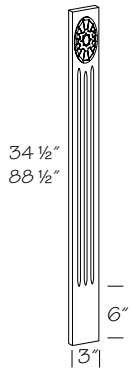

RVFF3 ▪34
RVFF3 ▪88

- 3/4" thick solid wood
- Applied decorative rosette
- Painted hardwood supplied for EverCore™ and Thermofoil
- ***Not*** available in Rustic Alder, High-Gloss Foil or Wood-Grain Foil door styles
- ***Not*** available in Morristown; Melrose and Putnam supplied plain sawn

PE
APC
APFC
FPEB
MI
CW
RD
CH
WR
VTK

Rosette Vanity Fluted Filler Overlay

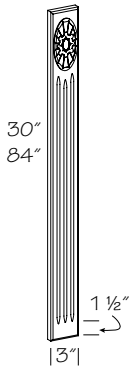

RFVFOL3 ▪34
RFVFOL3 ▪88

- 3/4" thick solid wood
- Applied decorative rosette
- Painted hardwood supplied for EverCore™ and Thermofoil
- ***Not*** available in Rustic Alder, High-Gloss Foil or Wood-Grain Foil door styles
- ***Not*** available in Morristown; Melrose and Putnam supplied plain sawn

PE
APC
APFC
FPEB
MI
CW
RD
CH
WR
VTK

Vanity Box

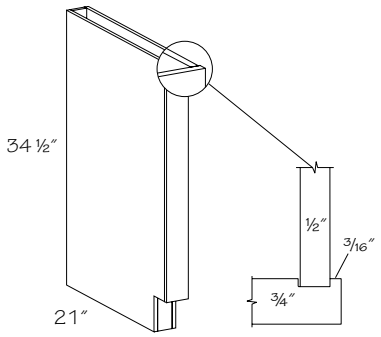

VB32134

- Finished front and both sides
- Reversible, may be used on either right or left end
- Painted hardwood supplied for EverCore™
- Painted or Stained hardwood supplied for Wood-Grain Foil door styles

●	PE
●	APC
●	APFC
●	FPEB
	MI
	CW
●	RD
●	CH
●	WR
●	VTK

Vanity Column

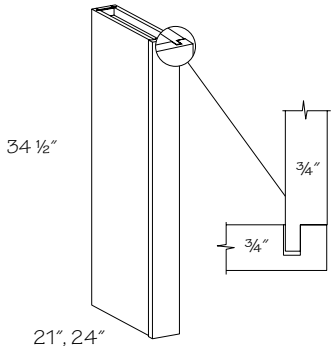

21″ Deep

❍ **VC32134**

VC62134

24″ Deep

❍ **VC32434**

VC62434

❍ Change Width (CW) option ***not*** available

- Quartersawn Oak door styles have 3/4″ solid quartersawn wood front and quartersawn wood veneer end panels
- Painted hardwood supplied for EverCore™
- Front is 3/4″ solid wood
- Plain sawn material supplied for Barnet Crafted door styles
- Foil-wrapped MDF supplied for Wood-Grain Foil door styles on face frame only
- Finished front and both sides
- Reversible, may be used on either right or left end

☆ APFC standard when APC option is selected

	PE
●	APC
☆	APFC
❖	FPEB
	MI
☆	CW
●	RD
●	CH
❖	WR
	VTK

Vanity Fluted Column

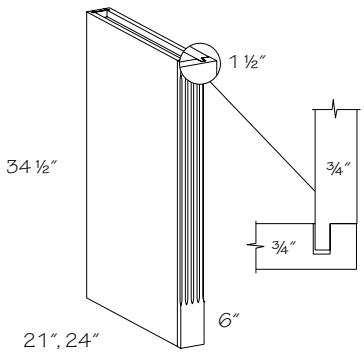

21″ Deep

VFC32134

24″ Deep

VFC32434

- Quartersawn Oak door styles have quartersawn wood veneer end panels
- Finished front and both sides
- Reversible, may be used on either right or left end
- Fluted front is 3/4″ solid wood; plain sawn wood supplied for quartersawn door styles
- Painted hardwood supplied for EverCore™
- Painted or Stained hardwood supplied for Wood-Grain Foil door styles
- Plain sawn material supplied for Barnet Crafted door styles
- ***Not*** available in Rustic Alder door styles
- ***Not*** available in Morristown

☆ APFC standard when APC option is selected

	PE
●	APC
☆	APFC
❖	FPEB
	MI
	CW
●	RD
●	CH
❖	WR
	VTK

Sterling Vanity Column

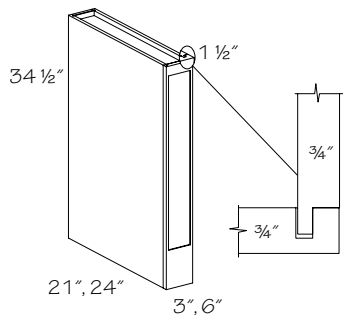

STVC321
STVC621
STVC324
STVC624

- Front is 3/4″ solid wood
- Available in Rustic Alder, Cherry, EverCore™, Maple and White Wood-Grain Foil door styles only
- Painted hardwood supplied for EverCore™ and Thermofoil
- Finished front and both sides
- Reversible, may be used on either right or left end

☆ APFC standard when APC option is selected

	PE
●	APC
☆	APFC
❖	FPEB
	MI
	CW
●	RD
	CH
❖	WR
	VTK

Plain Capital Sterling Vanity Column

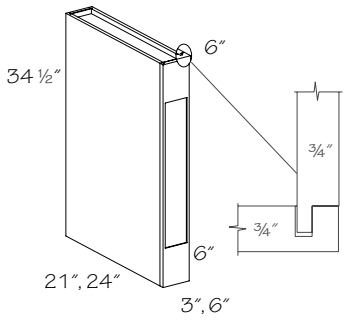

PCSTVC321
PCSTVC621
PCSTVC324
PCSTVC624

- Front is 3/4″ solid wood
- Available in Rustic Alder, Cherry, EverCore™, Maple and White Wood-Grain Foil door styles only
- Painted hardwood supplied for EverCore™
- Plain sawn material supplied for Barnet Crafted door styles
- Finished front and both sides
- Reversible, may be used on either right or left end

☆ APFC standard when APC option is selected

PE
● APC
☆ APFC
❖ FPEB
MI
CW
● RD
CH
❖ WR
VTK

Plain Capital Vanity Fluted Column

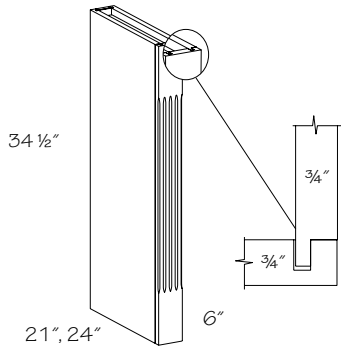

21″ Deep
PCVFC32134
24″ Deep
PCVFC32434

- Fluted front is 3/4″ solid wood; plain sawn wood supplied for quartersawn door styles
- Quartersawn Oak door styles have quartersawn wood veneer end panels
- Painted hardwood supplied for EverCore™
- Painted or Stained hardwood supplied for Wood-Grain Foil door styles
- Plain sawn material supplied for Barnet Crafted door styles
- Finished front and both sides
- Reversible, may be used on either right or left end
- ***Not*** available in Morristown

☆ APFC standard when APC option is selected

PE
● APC
☆ APFC
❖ FPEB
MI
CW
● RD
● CH
❖ WR
VTK

Rosette Vanity Fluted Column

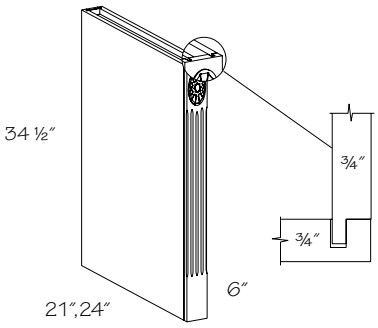

21″ Deep
RVFC32134
24″ Deep
RVFC32434

- Fluted front is 3/4″ solid wood; plain sawn wood supplied for quartersawn door styles
- Quartersawn Oak door styles have quartersawn wood veneer end panels
- Finished front and both sides
- Reversible, may be used on either right or left end
- Applied decorative rosette
- Painted hardwood supplied for EverCore™ and Thermofoil
- Plain sawn material supplied for Barnet Crafted door styles
- ***Not*** available in Rustic Alder, High-Gloss Foil or Wood-Grain Foil door styles
- ***Not*** available in Morristown

☆ APFC standard when APC option is selected

PE
● APC
☆ APFC
❖ FPEB
MI
CW
● RD
● CH
❖ WR
VTK

Vanity End Panel

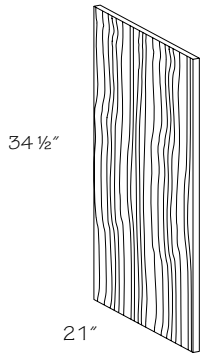

	Viraguard	*Width x Height x Thickness*
■	**VVEP2134**	21″ x 34 1/2″ x 3/4″
	Wood Veneer	
❊	**WVEP2134**	21″ x 34 1/2″ x 13/16″

■ ***Not*** available in Morristown; Melrose and Putnam supplied plain sawn

❊ Painted hardwood supplied for EverCore™ and Thermofoil

- Edgebanded one long edge
- Finished to match exterior both sides

☆ APC panel only available in wood veneer

☆ APC panel is 11/16″ thick

PE
☆ APC
APFC
FPEB
MI
CW
RD
● CH
WR
VTK

Vanity End Panel w/Stile

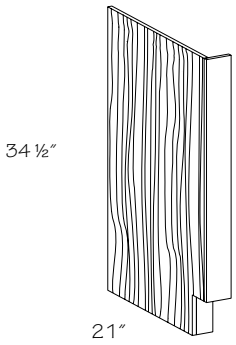

Specify R or L

VEP1 1/2 R or L▪34

VEP3 R or L▪34

- Exterior finished to match, interior is Natural Birch Viraguard and machined to match a cabinet end panel
- Left shown
- Crafted or Quartersawn door styles will be supplied in plain sawn wood
- Painted hardwood supplied for EverCore™
- Painted or Stained hardwood supplied for Wood-Grain Foil door styles

●	PE
●	APC
●	APFC
●	FPEB
●	MI
	CW
●	RD
●	CH
●	WR
●	VTK

Matching Vanity End Panel

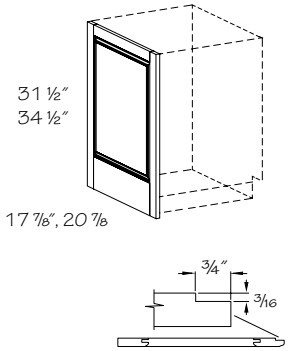

Standard edge detail — fits flush against 1/2″ end panel and behind face frame

Specify R or L

MVEP1831 R or L

MVEP2131 R or L

MVEP1834 R or L

MVEP2134 R or L

- 3/4″ thick panel with matching door edge profile on front edge only
- Matching panel may ***not*** align with the cabinet doors
- Left shown
- Foil and slab door styles do ***not*** have grooves and will ***not*** fit flush against 1/2″ end panel. A 3/16″ shim is recommended
- ***Not*** available in High-Gloss Foil door styles
- ***Not*** available in mitered door styles; use End Panel–Mitered
- ***Not*** available in Morristown; Melrose and Putnam supplied plain sawn

☆ Wide Bottom Rail—field notch for toe kick

	PE
	APC
	APFC
	FPEB
	MI
●	CW
	RD
●	CH
☆	WR
	VTK



When designing with Matching End Panels the reveal will differ from the cabinet door height reveal. Matching End Panels cover the entire side of the cabinet. See drawing for exact measurements

Matching Vanity End Panel–Square Edges

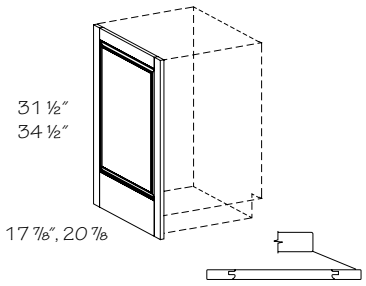

Will not fit flush against 1/2″ end panel, a 3/16″ shim is recommended

MVEP1831 ▪S

MVEP2131 ▪S

MVEP1834 ▪S

MVEP2134 ▪S

- 3/4″ thick panel with square edge front and back
- Inside of matching panel bottom rail will line up with inside bottom rail of door
- Reversible, may be used on either right or left end
- No frame recess dado
- Field installation only
- ***Not*** available in High-Gloss Foil, Thermofoil or Wood-Grain Foil door styles
- ***Not*** available in mitered door styles; use End Panel–Mitered
- ***Not*** available in Morristown; Melrose and Putnam supplied plain sawn

☆ Wide Bottom Rail—field notch for toe kick

	PE
	APC
	APFC
	FPEB
	MI
●	CW
	RD
●	CH
☆	WR
	VTK

Furniture Matching Vanity End Panel

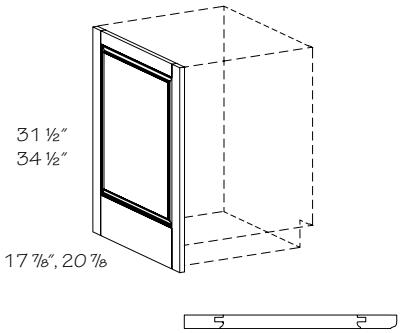

Specify R or L

FMVEP1831 R or L

FMVEP2131 R or L

FMVEP1834 R or L

FMVEP2134 R or L

- 3/4″ thick panel with matching door edge profile on front edge only
- Inside of matching panel bottom rail will line up with inside bottom rail of door
- For use with Furniture Plywood Ends (FPEB)—flush ends
- Left shown
- Field installation only
- ***Not*** available in mitered door styles; use End Panel–Mitered
- ***Not*** available in High-Gloss Foil or Wood-Grain Foil door styles
- ***Not*** available in Morristown; Melrose and Putnam supplied plain sawn

☆ Wide Bottom Rail—field notch for toe kick

	PE
	APC
	APFC
	FPEB
	MI
●	CW
	RD
●	CH
☆	WR
	VTK

Matching Vanity End Panel–Mitered

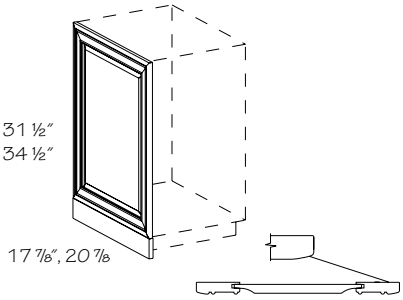

Will not fit flush against 1/2″ end panel, a 3/16″ shim is recommended

M•MVEP1831
M•MVEP2131
M•MVEP1834
M•MVEP2134

- 3/4″ thick panel with matching door edge profile on front edge only
- Inside of matching panel bottom rail will line up with inside bottom rail of door
- Available in mitered and Camby door styles only
- Reversible, may be used on either right or left end
- Field installation only
- Toe kick shipped unattached

☆ Wide Bottom Rail—field notch for toe kick

PE	APC	APFC	FPEB	MI	CW	RD	CH	WR	VTK
					●		●	☆	

Matching Tall Vanity End Panel

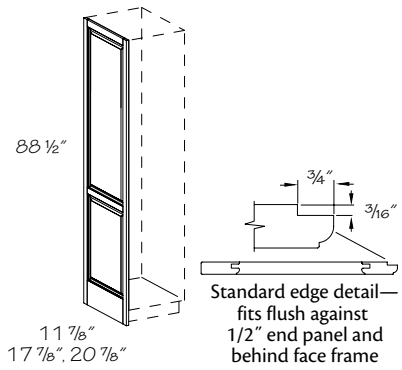

Standard edge detail—fits flush against 1/2″ end panel and behind face frame

Specify R or L

❍ **MTEP1288 R or L**
MTEP1888 R or L
MTEP2188 R or L

❍ Change Width (CW) option ***not*** available

- 3/4″ thick panel with matching door edge profile on front edge only
- Matching panel may ***not*** align with the cabinet doors
- Left shown
- Field installation only
- ***Not*** available in High-Gloss Foil, Thermofoil or Wood-Grain Foil door styles
- ***Not*** available in mitered door styles; use End Panel–Mitered
- ***Not*** available in Morristown
- ***Not*** available in slab door styles

☆ Wide Bottom Rail—field notch for toe kick

When designing with Matching End Panels the reveal will differ from the cabinet door height reveal. Matching End Panels cover the entire side of the cabinet. See drawing for exact measurements

PE	APC	APFC	FPEB	MI	CW	RD	CH	WR	VTK
					☆		●	☆	

Matching Tall Vanity End Panel–Square Edges

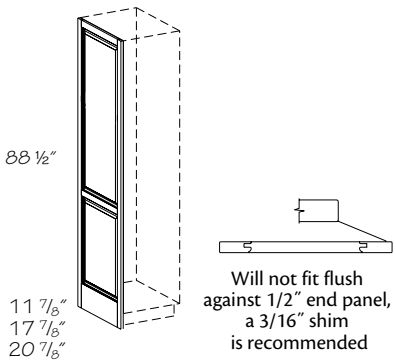

Will not fit flush against 1/2″ end panel, a 3/16″ shim is recommended

❍ **MTEP1288 •S**
MTEP1888 •S
MTEP2188 •S

❍ Change Width (CW) option ***not*** available

- 3/4″ thick panel with square edge front and back
- Reversible, may be used on either right or left end
- No frame recess dado
- Matching panel may ***not*** align with the cabinet doors
- Field installation only
- ***Not*** available in High-Gloss Foil, Thermofoil or Wood-Grain Foil door styles
- ***Not*** available in mitered door styles; use End Panel–Mitered
- ***Not*** available in slab door styles
- ***Not*** available in Morristown

☆ Wide Bottom Rail—field notch for toe kick

PE	APC	APFC	FPEB	MI	CW	RD	CH	WR	VTK
					☆		●	☆	

Furniture Matching Tall Vanity End Panel

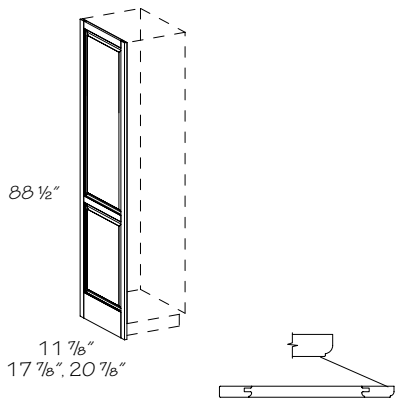

Specify R or L

❍ **FMTEP1288 R or L**
FMTEP1888 R or L
FMTEP2188 R or L

❍ Change Width (CW) option ***not*** available

- 3/4″ thick panel with matching door edge profile on front edge only
- Matching panel may ***not*** align with the cabinet doors
- Left shown
- Field installation only
- For use with Furniture Plywood Ends (FPEB)—flush ends
- ***Not*** available in High-Gloss Foil, Thermofoil or Wood-Grain Foil door styles
- ***Not*** available in mitered door styles; use End Panel–Mitered
- ***Not*** available in Morristown
- ***Not*** available in slab door styles

☆ Wide Bottom Rail—field notch for toe kick

PE	APC	APFC	FPEB	MI	CW	RD	CH	WR	VTK
					☆		●	☆	

Matching Tall Vanity End Panel–Mitered

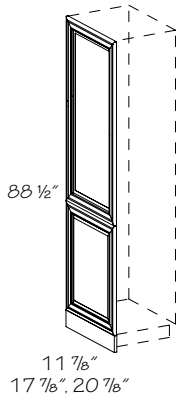

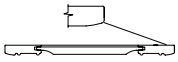

Will not fit flush against 1/2″ end panel, a 3/16″ shim is recommended

❍ **M▪MTEP1288**
M▪MTEP1888
M▪MTEP2188

❍ Change Width (CW) option ***not*** available

- 3/4″ thick panel with matching door edge profile on four sides
- Matching panel may ***not*** align with the cabinet doors
- Reversible, may be used on either right or left end
- Available in mitered door styles only
- Field installation only
- Top, bottom and toe kick shipped separately
- ***Not*** available in High-Gloss Foil, Thermofoil or Wood-Grain Foil door styles

	PE
	APC
	APFC
	FPEB
	MI
☆	CW
	RD
●	CH
	WR
	VTK

Toe Kick

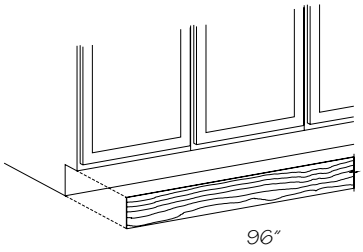

Black

† **BLTK8**
- 1/8" thick hardboard, 4 1/2" high

■ **MTK8**
- 1/8" thick hardboard, 4 1/2" high, laminated with matching Viraguard

Aluminum finish

MTK8 ▪A
- 1/16″ thick flexible laminate, 4 1/2″ high

Stainless finish

MTK8 ▪S
- 1/16″ thick flexible laminate, 4 1/2″ high

❇▲**WMTK8**
- 3/16" thick wood veneer, 4 1/2" high, to match

† Painted hardwood supplied for EverCore™

■ ***Not*** available in Morristown; Melrose and Putnam supplied plain sawn

❇ Painted hardwood supplied for EverCore™ and Thermofoil

▲ Painted or Stained hardwood supplied for Wood-Grain Foil door styles

- Edges are unfinished
- Field installation only
- ***Note:*** Matching toe kick is ***not*** automatically supplied with cabinets. It ***must*** be ordered as a separate item

Apply Shoe molding (SHO8) at the base of Matching Toe Kicks or Wood Matching Toe Kicks (MTK8 or WMTK8) for a nice, finished look.

	PE
	APC
	APFC
	FPEB
	MI
	CW
	RD
	CH
	WR
	VTK

Vanity Shallow Wood Tiered Drawer Storage (VSWTDS)

Cabinets		1VSWTDS	2VSWTDS	4VSWTDS
Vanity Base (12"-18")	VB_31	top	N/A	N/A
Vanity Sink Base (42"-60")	VSB_31	left top	left top right top	N/A
Vanity Sink Base (60")	VSB_31.3	top	N/A	N/A
Vanity Base Drawer (12"-18")	VBD_31	top	N/A	N/A
Vanity Sink Base Three Drawer*	VSB60_34.3	top	N/A	N/A
Vanity Sink Base Four Drawer*	VSB60_34.4	top	top + second	N/A
Vanity Combination (42"-60")	VCD_31.6	left top	left top right top	N/A
Vanity Combination Drawer (2)*	VCD_34. DL2 or DR2	N/A	N/A	N/A
Vanity Combination Drawer (3)*	VCD_34. DL3 or DR3	top	top + second	N/A
Vanity Combination Drawer (6)*	VCD_34.6	left top	left top + right top	N/A
Vanity Combination Drawer (8)*	VCD_34.8	left top	left top + right top	left top + second & right top + second
Vanity Combination Drawer- Full False Front (4)*	VCDF60_34.4	N/A	N/A	N/A
Vanity Combination Drawer- Full False Front (6)*	VCDF60_34.6	left top	left top + right top	left top + second & right top + second
Vanity Base Drawer	VBD_34.3	top	N/A	N/A
Vanity Base Four Drawer	VBD_34.4	top	top + second	N/A
Vanity Linen Cabinet Three Drawer	VLC_88.3	top	N/A	N/A
Vanity Linen Cabinet Four Drawer	VLC_88.4	top	top + second	N/A

* includes Decorative Accent Vanity collection models

Factory Installed Vanity Drawer Accessory Configuration Chart

Vanity Wood Tiered Drawer Storage (VWTDS)
Vanity Adjustable Drawer Dividers (VADD)

Cabinets		1VWTDS	1VADD	2VWTDS	2VADD	4VWTDS	4VADD	1VWTDS 1VADD	2VWTDS 2VADD
Wall Hung Vanity Combination Drawer (42"-48")	WHVCD	top	bottom	1 top 1 bottom	1 top 1 bottom	N/A	N/A	VWTDS top VADD bottom	N/A
Vanity Sink Base (60")	VSB_31.3	middle	bottom	1 middle 1 bottom	1 middle 1 bottom	N/A	N/A	VWTDS middle VADD bottom	N/A
Vanity Base Drawer (12"-18")	VBD_31	middle	bottom	1 middle 1 bottom	1 middle 1 bottom	N/A	N/A	VWTDS middle VADD bottom	N/A
Vanity Sink Base Three Drawer*	VSB60_34.3	middle	bottom	1 middle 1 bottom	1 middle 1 bottom	N/A	N/A	VWTDS middle VADD bottom	N/A
Vanity Sink Base Four Drawer*	VSB60_34.4	bottom	bottom	N/A	N/A	N/A	N/A	N/A	N/A
Vanity Combination Drawer (24"-36")	VCD_31	middle	bottom	1 middle 1 bottom	1 middle 1 bottom	N/A	N/A	VWTDS middle VADD bottom	N/A
Vanity Combination Drawer (42"-60")	VCD_31.6	left middle	left bottom	1 left middle 1 right middle	1 left bottom 1 right bottom	1 left middle 1 right middle 1 left bottom 1 right bottom	1 left middle 1 right middle 1 left bottom 1 right bottom	VWTDS right bottom VADD left bottom	VWTDS left middle VWTDS right middle VADD left bottom VADD right bottom
Vanity Combination Drawer (2)*	VCD_34. DL2 or DR2	middle	bottom	1 middle 1 bottom	1 middle 1 bottom	N/A	N/A	VWTDS middle VADD bottom	N/A
Vanity Combination Drawer (3)*	VCD_34. DL3 or DR3	bottom	bottom	N/A	N/A	N/A	N/A	N/A	N/A
Vanity Combination Drawer (6)*	VCD_34.6	left middle	left bottom	1 left middle 1 right middle	1 left bottom 1 right bottom	1 left middle 1 right middle 1 left bottom 1 right bottom	1 left middle 1 right middle 1 left bottom 1 right bottom	VWTDS left middle VADD left bottom	VWTDS left middle VWTDS right middle VADD left bottom VADD right bottom
Vanity Combination Drawer (8)*	VCD_34.8	left bottom	left bottom	1 left bottom 1 right bottom	1 left bottom 1 right bottom	N/A	N/A	VWTDS right bottom VADD left bottom	N/A
Vanity Combination Drawer- Full False Front (4)*	VCDF60_34.4	left middle	left bottom	1 left middle 1 right middle	1 left bottom 1 right bottom	1 left middle 1 right middle 1 left bottom 1 right bottom	1 left middle 1 right middle 1 left bottom 1 right bottom	VWTDS left middle VADD left bottom	VWTDS left middle VWTDS right middle VADD left bottom VADD right bottom
Vanity Combination Drawer- Full False Front (6)*	VCDF60_34.6	left bottom	left bottom	1 left bottom 1 right bottom	1 left bottom 1 right bottom	N/A	N/A	VWTDS right bottom VADD left bottom	N/A
Vanity Base Drawer	VBD_34.3	middle	bottom	1 middle 1 bottom	1 middle 1 bottom	N/A	N/A	VWTDS middle VADD bottom	N/A
Vanity Base Four Drawer	VBD_34.4	bottom	bottom	N/A	N/A	N/A	N/A	N/A	N/A
Vanity Linen Cabinet Three Drawer	VLC_88.3	middle	bottom	1 middle 1 bottom	1 middle 1 bottom	N/A	N/A	VWTDS middle VADD bottom	N/A
Vanity Linen Cabinet Four Drawer	VLC_88.4	bottom	bottom	N/A	N/A	N/A	N/A	N/A	N/A

* includes Decorative Accent Vanity collection models

Minimum Clearances

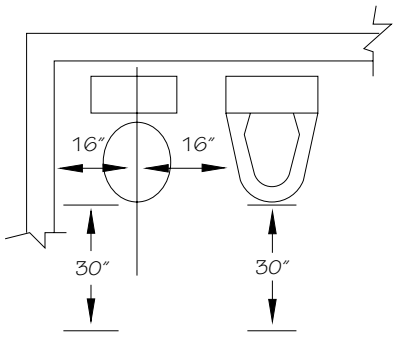

Minimum 30" of clearance space in front of the fixture

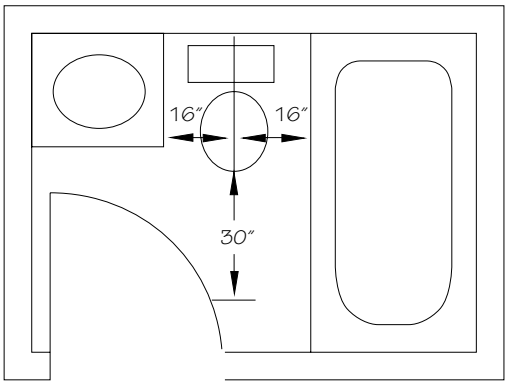

16" of clearance on each side of center

A minimum of 2" from the edge of the bowl to a wall or similar obstruction

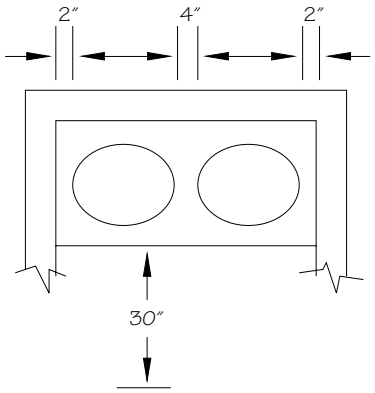

Minimum 30" of clearance space in front of the fixture. When using double bowls, allow 4" of space between the edge of each bowl.

Desirable Clearances

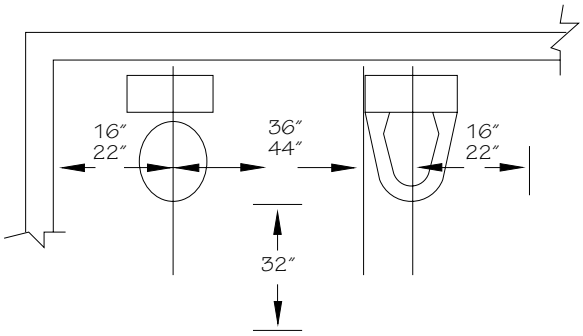

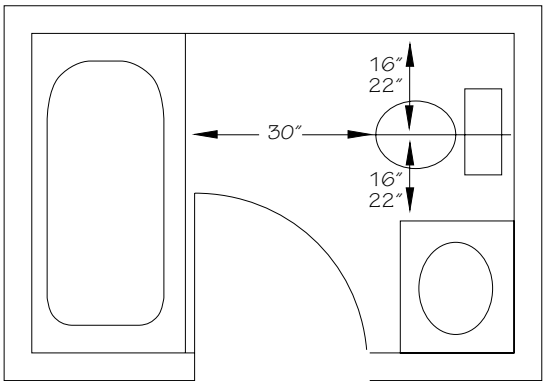

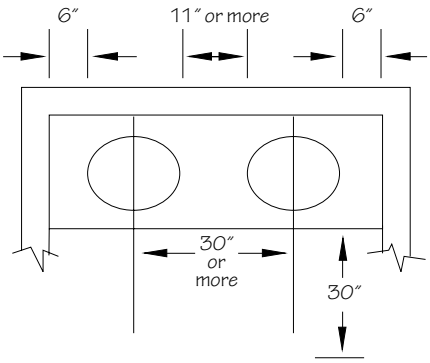

Office Cabinets

OW	33	36
code	width	height

Note: Standard office cabinet box depth is 18", 21" or 24" unless stated otherwise. Add door thickness with bumpers for total depth. Standard base desk cabinet height is 29" unless stated otherwise.

Material dimensions listed may vary slightly from actual dimensions of the product.

Specifications subject to change without notice.

Construction Options and Modifications

- ❖ Included as standard
- ● Available with an upcharge
- ☆ Available with exceptions
- (Blank) ***Not*** available

PE	Plywood Ends
APC	All Plywood Construction
APFC	All Plywood Furniture Construction
FPEB	Furniture Plywood Ends
MI	Matching Interior
OE	Operational End
CW	Change Width
RD	Reduced Depth
CH	Change Height
IF	Inverted Frame
TWR	Top Wide Rail
WR	Wide Bottom Rail
XS	Extended Stile
GD	Glass Doors
RTK	Recessed Toe Kick
RTKP	Recessed Toe Kick Peninsula
VTK	Void Toe Kick
TKD	Toe Kick Drawer

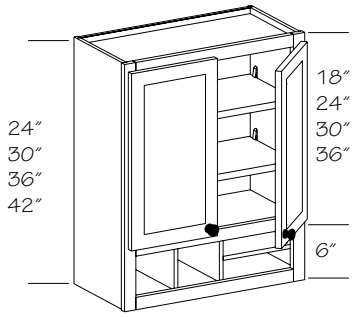

Organizer Wall Cabinet

Specify R or L
No shelf
24" High

OW2424 BUTT
OW2724 (Butt)
◆ **OW3024**
◆ **OW3324**
◆ **OW3624**

One shelf
30" High

❊ **OW2430 R or L**
OW2430 BUTT
OW2730 (Butt)
◆ **OW3030**
◆ **OW3330**
◆ **OW3630**

Specify R or L
Two shelves
36" High

❊ **OW2436 R or L**
OW2436 BUTT
OW2736 (Butt)
◆ **OW3036**
OW3036 BUTT
◆ **OW3336**
◆ **OW3636**
OW3636 BUTT

Three shelves
42" High

❊ **OW2442 R or L**
OW2442 BUTT
OW2742 (Butt)
◆ **OW3042**
◆ **OW3342**
◆ **OW3642**

OW24
OW27

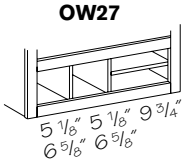

OW30

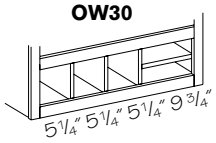

OW33
OW36

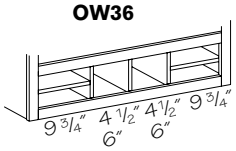

◆ 3" center stile
❊ Single door—specify right or left

- Adjustable shelves
- Back Options (BEB and VGRB) ***not*** available
- Contrasting Back Options (CBEB, CPLB, CVGR) ***not*** available

☆ Organizer section only is matching interior standard

●	PE
●	APC
●	APFC
●	FPEB
☆	MI
	OE
	CW
	RD
●	CH
	IF
	TWR
	WR
●	XS
●	GD
	RTK
	RTKP
	VTK
	TKD

Organizers

O24
O27
O30
O33
O36

O24-27

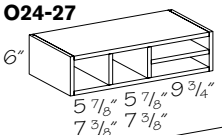

O30

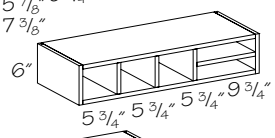

O33-O36

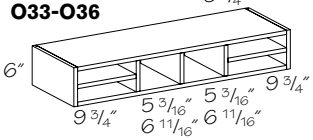

- 5/8" wood veneer construction; not available in plywood
- Vinyl edge banding applied to edges of cabinet
- Quartersawn door styles will be supplied in plain sawn wood
- Contrasting Back Options (CBEB, CPLB, CVGR) ***not*** available
- The staple/nail holes are visible on the ends of the organizer cabinets with fixed shelves; shelves are pin nailed from the outside of the cabinet
- ***Note:*** This cabinet features "frameless" type construction

	PE
	APC
	APFC
	FPEB
❖	MI
	OE
	CW
	RD
	CH
	IF
	TWR
	WR
	XS
	GD
	RTK
	RTKP
	VTK
	TKD

When using an Organizer (O—) Cabinet or Spice Drawer Cabinet (SDC), which have flush ends standard, under a wall cabinet at the end of a run, either attach Furniture Ends (FE) or order a 3/16" Wood Skin (WSK) for the wall cabinet to flush the ends. (There will be a seam.) Also, consider ordering a furniture matching wall end panel if the height of the finished product allows it. For an alternative, see our Organizer Wall Cabinet in the Office Cabinet section.

Desk Door Cabinet–Single Door

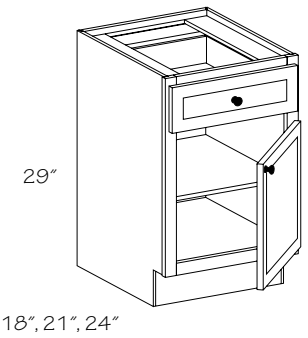

Specify R or L
18″ Deep

❍ **DDO1218 R or L**
DDO1518 R or L
DDO1818 R or L
DDO2118 R or L
DDO2418 R or L

Specify R or L
24″ Deep

❍ **DDO1224 R or L**
DDO1524 R or L
DDO1824 R or L
DDO2124 R or L
DDO2424 R or L

21″ Deep

❍ **DDO12 R or L**
DDO15 R or L
DDO18 R or L
DDO21 R or L
DDO24 R or L

❍ Change Width (CW) option ***not*** available

- Comfortable height for dressing table or writing surface
- One adjustable shelf
- DDO12, 15, and 18 available with Full-Height Door (FHK) option

☆ Operational End (OE) is ***not*** available with Reduced Depth (RD) options

● PE
● APC
● APFC
● FPEB
● MI
☆ OE
☆ CW
● RD
● CH
● IF
● TWR
● WR
● XS
● GD
● RTK
● RTKP
● VTK
● TKD

Desk Door Cabinet–Double Door

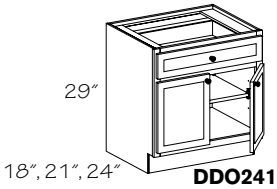

DDO2418BUTT-DDO3024

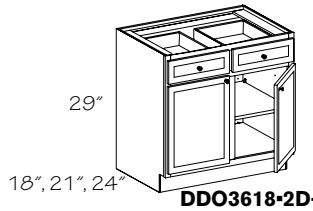

DDO3618▪2D-DDO3624▪2D

18″ Deep

❍ **DDO2418 BUTT**
DDO2718
◆ **DDO3018**

Two Drawer

◆ **DDO3618 ▪2D**

21″ Deep

❍ **DDO24 BUTT**
DDO27
◆ **DDO30**

Two Drawer

◆ **DDO36 ▪2D**

24″ Deep

❍ **DDO2424 BUTT**
DDO2724
◆ **DDO3024**

Two Drawer

◆ **DDO3624 ▪2D**

❍ Change Width (CW) option ***not*** available
◆ 3″ center stile

- Comfortable height for dressing table or writing surface
- One adjustable shelf
- DDO30 and 36 available with Full-Height Door (FHK) option

☆ Operational End (OE) is ***not*** available with Reduced Depth (RD) options

● PE
● APC
● APFC
● FPEB
● MI
☆ OE
☆ CW
● RD
● CH
● IF
● TWR
● WR
● XS
● GD
● RTK
● RTKP
● VTK
● TKD

Desk Full-Height Door

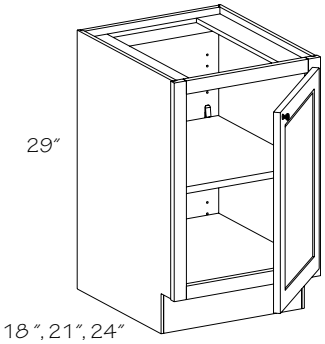

Specify R or L
18″ Deep

❍ **DDO1218 R or L▪FH**
DDO1518 R or L▪FH
DDO1818 R or L▪FH
◆ **DDO3018 ▪FH**
◆ **DDO3618 ▪FH**

Specify R or L
24″ Deep

❍ **DDO1224 R or L▪FH**
DDO1524 R or L▪FH
DDO1824 R or L▪FH
◆ **DDO3024 ▪FH**
◆ **DDO3624 ▪FH**

21″ Deep

❍ **DDO12R or L▪FH**
DDO15R or L▪FH
DDO18R or L▪FH
◆ **DDO30▪FH**
◆ **DDO36▪FH**

❍ Change Width (CW) option ***not*** available
◆ 3″ center stile

- Comfortable height for dressing table or writing surface
- One adjustable shelf

☆ Operational End (OE) is ***not*** available with Reduced Depth (RD) options

● PE
● APC
● APFC
● FPEB
● MI
☆ OE
☆ CW
● RD
● CH
IF
TWR
● WR
● XS
● GD
● RTK
● RTKP
● VTK
● TKD

Desk Drawer Cabinet

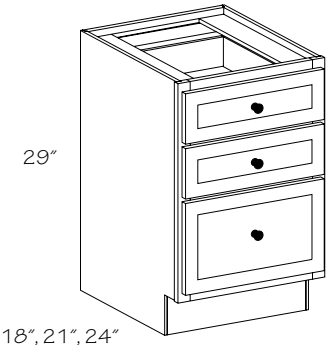

18″ Deep

❍ **DDR1218**
DDR1518
DDR1818
DDR2118
DDR2418

24″ Deep

❍ **DDR1224**
DDR1524
DDR1824
DDR2124
DDR2424

21″ Deep

❍ **DDR12**
DDR15
DDR18
DDR21
DDR24

❍ Change Width (CW) option ***not*** available

- Comfortable height for dressing table or writing surface
- Two standard drawers
- One deep drawer
- Deep drawer will ***not*** accept hanging file folders

● PE
● APC
● APFC
● FPEB
MI
OE
● CW
● RD
CH
IF
● TWR
● WR
● XS
GD
● RTK
● RTKP
● VTK
● TKD

Desk Multi-Storage Drawer Cabinet

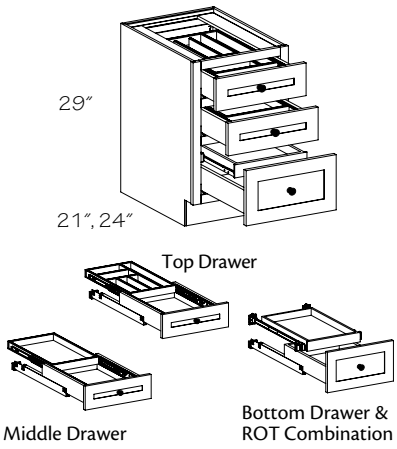

21″ Deep

DMSD18
DMSD21
DMSD24

24″ Deep

DMSD1824
DMSD2124
DMSD2424

- Bottom drawer is 4″ deep with standard Roll-out Tray (ROT) above drawer
- Two Tiered Drawer Storage drawers with dividers in top tray of top drawer only

●	PE
●	APC
●	APFC
●	FPEB
	MI
	OE
	CW
	RD
	CH
	IF
●	TWR
●	WR
●	XS
	GD
●	RTK
●	RTKP
●	VTK
●	TKD

Desk File Drawer Cabinet

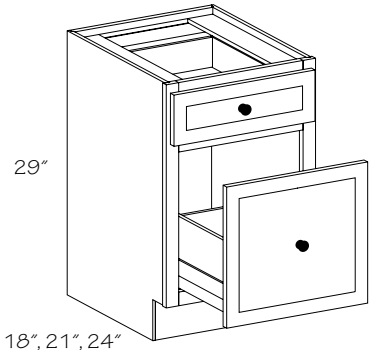

18″ Deep

❍ **DFD1518**
DFD1818
DFD2118
DFD2418

21″ Deep

❍ **DFD15**
DFD18
DFD21
DFD24

24″ Deep

❍ **DFD1524**
DFD1824
DFD2124
DFD2424

❍ Change Width (CW) option ***not*** available

- One standard drawer, one deep drawer
- Designed to accept standard hanging file system
- 15″, 21″ and 24″ wide DFDs are designed to be used as a lateral file
- 18″ deep cabinets ***cannot*** hold legal size folders when used as a lateral file
- All DFD drawer fronts will match the door panel detail rather than the standard drawer front for that door style
- Hanging file hardware is ***not*** included
- Hanging file folders ***not*** included

☆ Minimum Reduced Depth (RD) is 18″

●	PE
●	APC
●	APFC
●	FPEB
	MI
	OE
☆	CW
☆	RD
	CH
●	IF
●	TWR
●	WR
●	XS
	GD
●	RTK
●	RTKP
●	VTK
●	TKD

Desk Double File Drawer

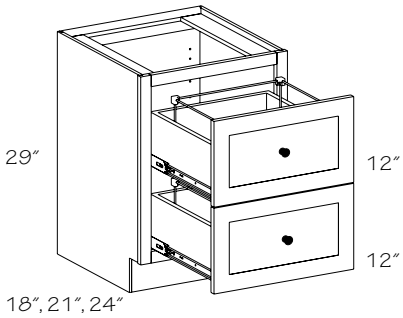

18″ Deep

DDFD1818
DDFD2418
DDFD3018

21″ Deep

DDFD18
DDFD24
DDFD30

24″ Deep

DDFD1824
DDFD2424
DDFD3024

- Two deep drawers with side-mount full-extension runners
- 24″ wide DDFDs are designed to be used as a lateral file and can be adjusted to accept letter or legal file folders
- 18″ and 30″ wide DDFDs are designed to be used as a standard or lateral file and can be adjusted to accept letter or legal file folders
- 18″ deep cabinets ***cannot*** hold legal size folders when used as a lateral file
- Hanging file hardware is included and attached to drawer box sides to support hanging file folders. Drawer box bottom does ***not*** support any weight
- Hanging file folders ***not*** included

●	PE
●	APC
●	APFC
●	FPEB
	MI
	OE
	CW
	RD
	CH
	IF
	TWR
●	WR
●	XS
	GD
●	RTK
●	RTKP
●	VTK
●	TKD

Desk Wastebasket

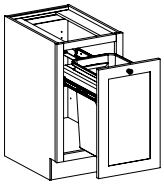

DWBT15 18"-21" D

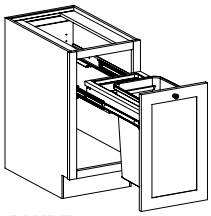

DWBT1524

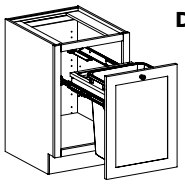

DWBT18 18"-21" D

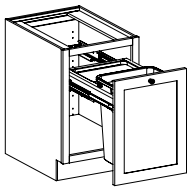

DWBT1824

18" Deep

DWBT1518 ▪FH

DWBT1818 ▪FH

21" Deep

DWBT15 ▪FH

DWBT18 ▪FH

24" Deep

DWBT1524 ▪FH

DWBT1824 ▪FH

- One 35 qt. capacity basket
- Grey basket(s)
- Basket(s) rest in a Natural Maple plywood frame
- Basket(s) are easily removable for emptying or cleaning
- Door is attached to roll-out unit
- Frame slides on full extension glides
- Includes 3 1/2" deep bag storage tray at rear
- Optional Wastebasket Lid (WBL35.G) available for 35 qt. wastebasket

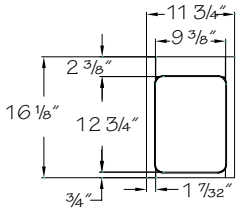

DWBT15
18"-21" D

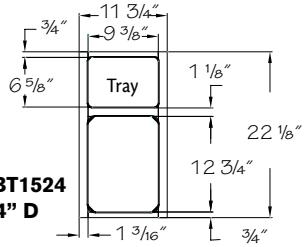

DWBT1524
24" D

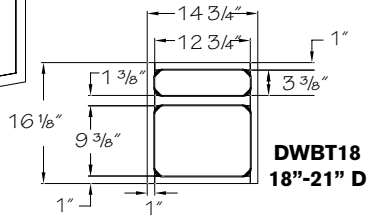

DWBT18
18"-21" D

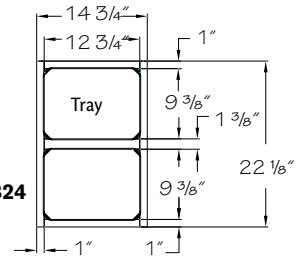

DWBT1824
24" D

●	PE
●	APC
●	APFC
●	FPEB
	MI
	OE
	CW
	RD
	CH
	IF
	TWR
●	WR
●	XS
	GD
●	RTK
●	RTKP
●	VTK
●	TKD

Desk Wastebasket w/Soft-Close Runners

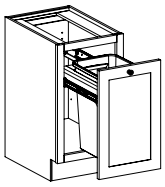

DWBT15 21" D

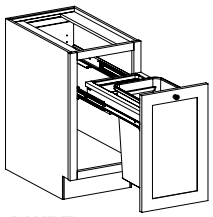

DWBT1524

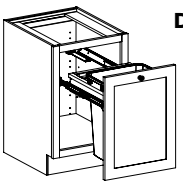

DWBT18 21" D

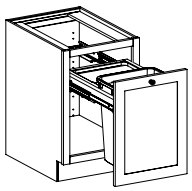

DWBT1824

21" Deep

DWBT15 ▪FH▪SC

DWBT18 ▪FH▪SC

24" Deep

DWBT1524 ▪FH▪SC

DWBT1824 ▪FH▪SC

- One 35 qt. capacity basket
- Grey basket(s)
- Basket(s) rest in a Natural Maple plywood frame
- Basket(s) are easily removable for emptying or cleaning
- Door is attached to roll-out unit
- Frame slides on Soft-Close, full extension glides
- Includes 3 1/2" deep bag storage tray at rear
- Optional Wastebasket Lid (WBL35.G) available for 35 qt. wastebasket

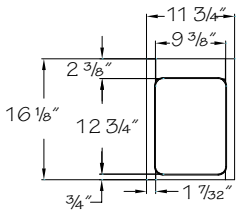

DWBT15
21" D

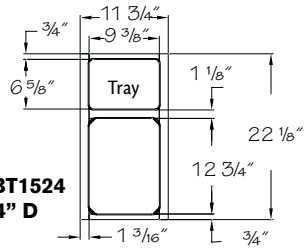

DWBT1524
24" D

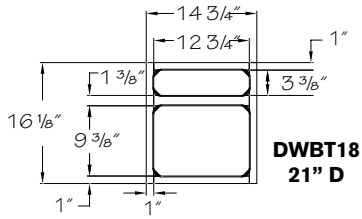

DWBT18
21" D

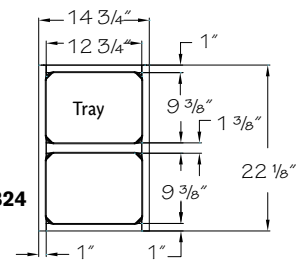

DWBT1824
24" D

●	PE
●	APC
●	APFC
●	FPEB
	MI
	OE
	CW
	RD
	CH
	IF
	TWR
●	WR
●	XS
	GD
●	RTK
●	RTKP
●	VTK
●	TKD

Desk Knee Drawer Cabinet

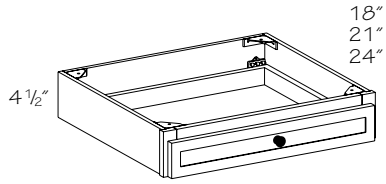

DKD21-DKD33

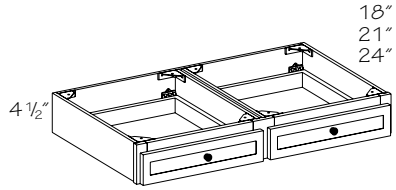

DKD36 ▪2D

18″ Deep

❍ **DKD2118**
DKD2418
DKD2718
DKD3018
DKD3318
❍▲ **DKD3618 ▪2D**

21″ Deep

❍ **DKD21**
DKD24
DKD27
DKD30
DKD33
❍▲ **DKD36 ▪2D**

24″ Deep

❍ **DKD2124**
DKD2424
DKD2724
DKD3024
DKD3324
❍▲ **DKD3624 ▪2D**

❍ Change Width (CW) option ***not*** available
▲ Two drawers side by side

- Unit is designed for use between two base, desk or tall cabinets
- When mounted at 29" height with a 1 1/2" countertop, unit provides a comfortable writing surface
- One end of DKD can be supported by optional Desk End Panel (DEP)
- Drawer will be slab, including DRPD, except Lasalle, Lyndale and Mandolay door styles which will be five-piece
- ***Not*** trimmable

☆ End panels are 1/2″ plywood with Natural Birch Viraguard interior and exterior

Consider using a Cabinet Front Only (CFO) under a desk to cover up wires, outlets etc. This will decorate the area, plus give easy access to cords. Especially useful if you are placing a CPU in a cabinet next to your knee space.

☆	PE
●	APC
	APFC
	FPEB
	MI
	OE
☆	CW
●	RD
	CH
	IF
	TWR
	WR
●	XS
	GD
	RTK
	RTKP
	VTK
	TKD

Computer Keyboard Drawer Cabinet

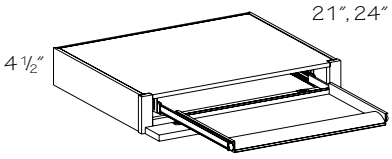

21″ Deep

KBD27

24″ Deep

KBD2724

- Pull-out keyboard tray
- Tilt down drawer front
- Adjustable wrist rest
- Unit is designed for use between two base, desk or tall cabinets
- When mounted at 29" height with a 1 1/2" countertop, unit provides a comfortable writing surface
- If unit is installed at an angle, fillers should be used to avoid interference with adjacent cabinet
- One end of KBD can be supported by optional desk end panel DEP
- Slab drawer front in all door styles; DRPD ***not*** available
- Keyboard tray mechanism shipped separately
- ***Not*** trimmable

●	PE
●	APC
●	APFC
●	FPEB
	MI
	OE
	CW
	RD
	CH
	IF
	TWR
	WR
●	XS
	GD
	RTK
	RTKP
	VTK
	TKD

Tall File Cabinet 24" Deep

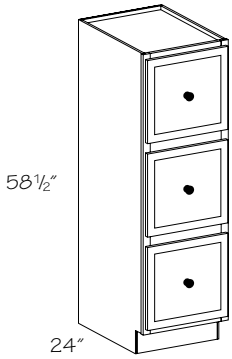

TFD182458

- Three file drawers
- Designed to accept standard hanging file system - hanging system ***not*** included
- Hanging file folders ***not*** included

☆ Minimum Reduced Depth (RD) is 18″

- ***Note:*** This cabinet is constructed with a standard ceiling panel; a finished top is recommended

●	PE
●	APC
●	APFC
●	FPEB
	MI
	OE
	CW
☆	RD
	CH
	IF
	TWR
●	WR
●	XS
	GD
●	RTK
	RTKP
●	VTK
●	TKD

Desk Easy Reach

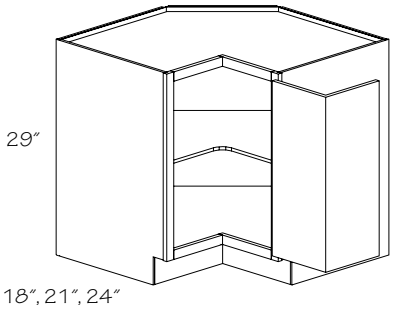

Specify R or L

DEZR2718 R or L
DEZR3021 R or L
DEZR3324 R or L

- One adjustable shelf
- Doors are profiled on one long and two short edges and are connected with hinges
- Angled back provides clearance for installation
- Wood-Grain Foil door styles will be supplied as vertical grain slabs
- Vanderbilt doors will have a solid, recessed flat panel. Courtney doors will have a veneer, recessed flat panel
- Contrasting Back Options (CBEB, CPLB, CVGR) ***not*** available
- ***Note:*** Does ***not*** include Soft-Close feature

●	PE
●	APC
●	APFC
●	FPEB
●	MI
	OE
	CW
	RD
●	CH
	IF
	TWR
●	WR
●	XS
	GD
●	RTK
	RTKP
●	VTK
	TKD

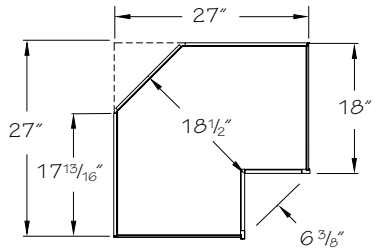

DEZR2718

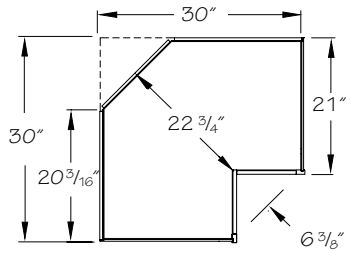

DEZR3021

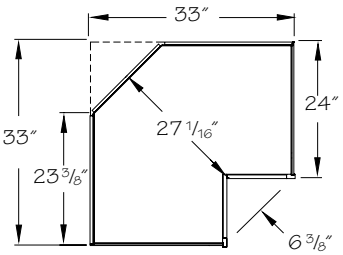

DEZR3324

Office Accessories

RDFC	3	27
code	width	depth

Material dimensions listed may vary slightly from actual dimensions of the product.

Specifications subject to change without notice

Construction Options and Modifications

❖ Included as standard
● Available with an upcharge
☆ Available with exceptions
(Blank) ***Not*** available

PE	Plywood Ends
APC	All Plywood Construction
APFC	All Plywood Furniture Construction
FPEB	Furniture Plywood Ends
CW	Change Width
RD	Reduced Depth
CH	Change Height
WR	Wide Bottom Rail
RTK	Recessed Toe Kick
RTKP	Recessed Toe Kick Peninsula
VTK	Void Toe Kick

Replacement Wastebasket

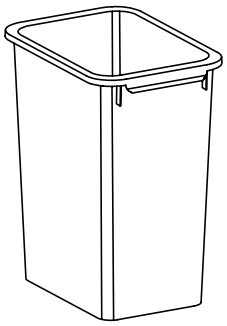

RCWB35 35 qt.
RCWB50 50 qt.

- Grey basket(s)
- Field installation only
- Optional Wastebasket Lid (WBL) available for 35 and 50 qt. wastebaskets

PE ❖
APC ❖
APFC ❖
FPEB ❖
CW ●
RD ●
CH ●
WR ●
RTK ●
RTKP ●
VTK ●

Wastebasket Lid

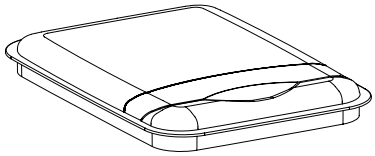

Fits 35 qt. Wastebasket
WBL35•G Grey
Fits 50 qt.Wastebasket
WBL50•G Grey

- Lid flips open manually
- Lid holds can liner in place

PE ❖
APC ❖
APFC ❖
FPEB ❖
CW ●
RD ●
CH ●
WR ●
RTK ●
RTKP ●
VTK ●

Knee Drawer Divider or Kit

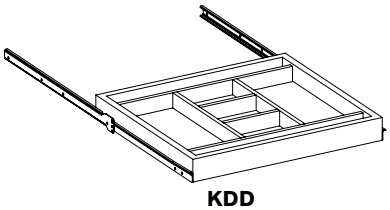

KDD

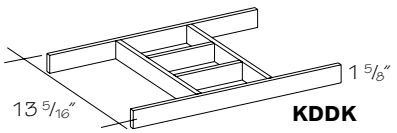

KDDK

Installed
❊ **KDD18**
KDD21
KDD24
KDD27
KDD30

Kit Section width
❊ **KDDK18** 3 7/8"
KDDK21 4 7/8"
KDDK24 5 7/8"
KDDK27 6 7/8"
KDDK30 7 7/8"

❊ For one side of DKD36•2D

- Fits DKD drawers only
- 1/2" thick solid wood dividers are 1 1/2" high
- Each long section is approximately 12 1/2" deep
- All units are 13 5/16" deep
- Order Example: Installation in both drawers of DKD36•2D use DKD36•2D-KDD18-KDD18

PE ❖
APC ❖
APFC ❖
FPEB ❖
CW ●
RD ●
CH ●
WR ●
RTK ●
RTKP ●
VTK ●

Computer Keyboard Drawer Kit

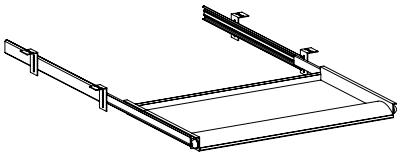

KBDK

- Store under work surface when ***not*** in use
- Minimum 24" clear width and 21" clear depth required for installation
- Adjustable wrist rest
- If unit is installed at an angle, fillers should be used to avoid interference with adjacent cabinet
- Field installation only

PE
APC
APFC
FPEB
CW
RD
CH
WR
RTK
RTKP
VTK

Desk Filler

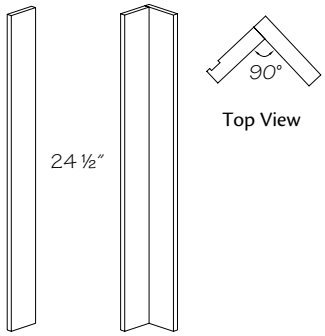

DF3
DF6
DF3X3

- 3/4" thick solid wood
- Finished one side only
- Quartersawn door styles will be supplied in plain sawn wood
- No toe kick
- Painted hardwood supplied for EverCore™ and Thermofoil
- Painted or Stained hardwood supplied for Wood-Grain Foil door styles

PE
APC
APFC
FPEB
CW
RD
CH
WR
RTK
RTKP
VTK

Desk Filler Overlay

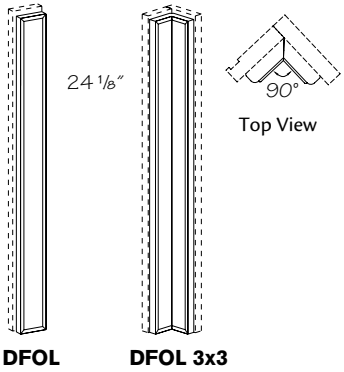

DFOL3
DFOL6
▲ DFOL3X3

▲ Shipped as two pieces in Thermofoil and Wood-Grain Foil door styles. ***Must*** be field trimmed and mitered

- Available in full overlay door styles only
- Available in High-Gloss Foils finish except in 3X3 models
- Filler overlay has routed door profile and is made from the same material as doors and drawer fronts
- Filler ordered separately

PE
APC
APFC
FPEB
CW
RD
CH
WR
RTK
RTKP
VTK

Desk Fluted Filler

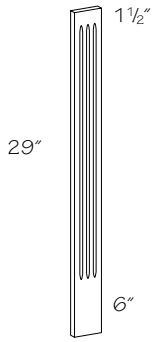

DFF3
DFF6

- 3/4" thick solid wood
- Painted hardwood supplied for EverCore™ and Thermofoil
- Painted or Stained hardwood supplied for Wood-Grain Foil door styles
- ***Not*** available in Morristown; Melrose and Putnam supplied plain sawn

PE
APC
APFC
FPEB
CW
RD
CH
WR
RTK
RTKP
VTK

Plain Capital Desk Fluted Filler

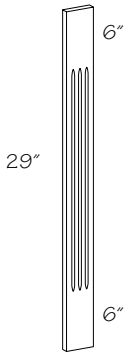

PCDFF3
PCDFF6

- 3/4" thick solid wood
- Painted hardwood supplied for EverCore™ and Thermofoil
- Painted or Stained hardwood supplied for Wood-Grain Foil door styles
- ***Not*** available in Morristown; Melrose and Putnam supplied plain sawn

PE
APC
APFC
FPEB
CW
RD
CH
WR
RTK
RTKP
VTK

Rosette Desk Fluted Filler

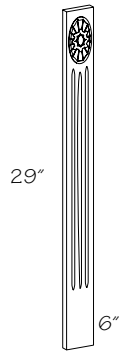

RDFF3

- 3/4" thick solid wood
- Applied decorative rosette
- ***Not*** available in Rustic Alder door styles
- ***Not*** available in Wood-Grain Foil door styles
- ***Not*** available in Morristown; Melrose and Putnam supplied plain sawn
- Painted hardwood supplied for EverCore™ and Thermofoil

PE
APC
APFC
FPEB
CW
RD
CH
WR
RTK
RTKP
VTK

Rosette Desk Fluted Filler Overlay

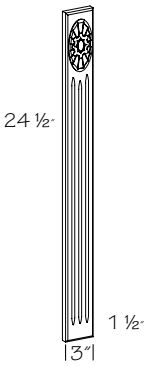

RFDFOL3

- 3/4" thick solid wood
- Applied decorative rosette
- ***Not*** available in Rustic Alder door styles
- ***Not*** available in Wood-Grain Foil door styles
- ***Not*** available in Morristown; Melrose and Putnam supplied plain sawn
- Painted hardwood supplied for EverCore™ and Thermofoil

PE
APC
APFC
FPEB
CW
RD
CH
WR
RTK
RTKP
VTK

Filler Extension

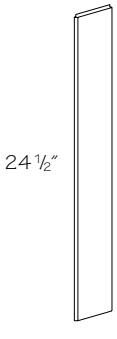

Filler Extension

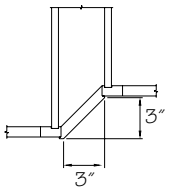

Filler Extension Application

FE3•25

- 3/4" thick solid wood
- Quartersawn door styles will be supplied in plain sawn wood
- Painted hardwood supplied for EverCore™ and Thermofoil
- Painted or Stained hardwood supplied for Wood-Grain Foil door styles

PE
APC
APFC
FPEB
CW
RD
CH
WR
RTK
RTKP
VTK

Fluted Filler Extension

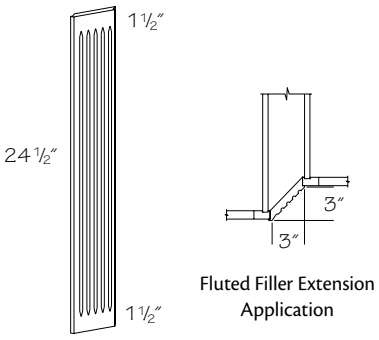

Fluted Filler Extension Application

Fluted Filler Extension

FFE3•25

- 3/4" thick solid wood
- Painted hardwood supplied for EverCore™ and Thermofoil
- Painted or Stained hardwood supplied for Wood-Grain Foil door styles
- ***Not*** available in Morristown; Melrose and Putnam supplied plain sawn

PE
APC
APFC
FPEB
CW
RD
CH
WR
RTK
RTKP
VTK

Desk Box

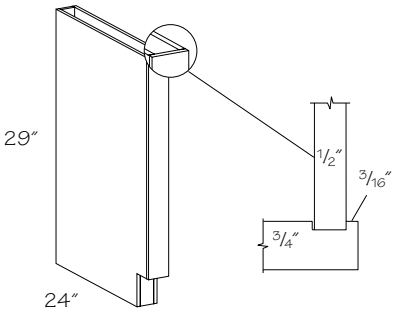

DB3

- Finished front and both sides
- Quartersawn door styles will be supplied in plain sawn wood
- Painted hardwood supplied for EverCore™
- Painted or Stained hardwood supplied for Wood-Grain Foil door styles
- Reversible, may be used on either right or left end

☆ Only available with Recessed Toe Kick Peninsula Back (RTKP); ***cannot*** accommodate Recessed Toe Kick for sides (RTKPB, RTKPL, RTKPR)

● PE
● APC
● APFC
● FPEB
CW
● RD
● CH
● WR
RTK
☆ RTKP
● VTK

Desk Column

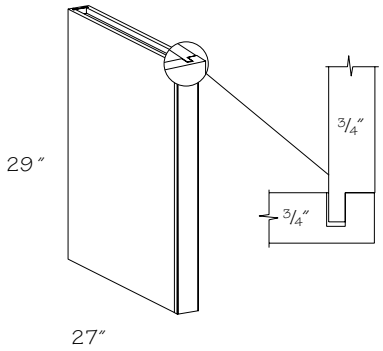

❍ **DC327**
DC627

❍ Change Width (CW) option ***not*** available

- Front is 3/4" solid wood
- Quartersawn Oak door styles have 3/4" solid quartersawn wood front and quartersawn wood veneer end panels
- Plain sawn material supplied for Barnet Crafted door styles
- Painted hardwood supplied for EverCore™
- Foil-wrapped MDF supplied for Wood-Grain Foil door styles on face frame only
- Finished front and both sides
- Reversible, may be used on either right or left end

☆ APFC standard when APC option is selected

PE
● APC
☆ APFC
❖ FPEB
☆ CW
● RD
● CH
❖ WR
RTK
RTKP
VTK

Desk Fluted Column

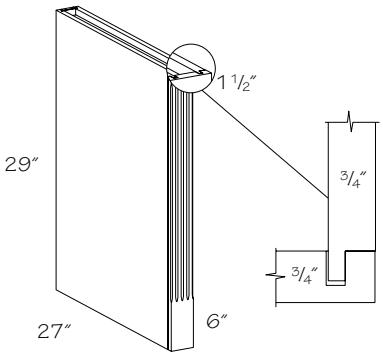

DFC327

- Fluted front is 3/4" solid wood; plain sawn wood supplied for quartersawn door styles
- Finished front and both sides
- Quartersawn Oak door styles have quartersawn wood veneer end panels
- Plain sawn material supplied for Barnet Crafted door styles
- Reversible, may be used on either right or left end
- Painted hardwood supplied for EverCore™
- Painted or Stained hardwood supplied for Wood-Grain Foil door styles
- ***Not*** available in Morristown

☆ APFC standard when APC option is selected

PE
● APC
☆ APFC
❖ FPEB
CW
● RD
CH
❖ WR
RTK
RTKP
VTK

Plain Capital Desk Fluted Column

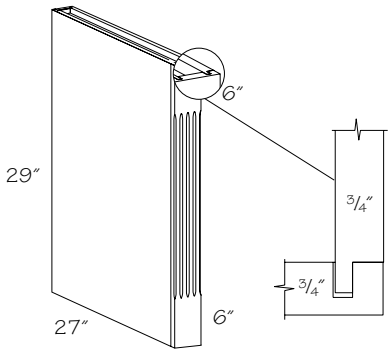

PCDFC327

- Fluted front is 3/4″ solid wood; plain sawn wood supplied for quartersawn door styles
- Finished front and both sides
- Quartersawn Oak door styles have quartersawn wood veneer end panels
- Plain sawn material supplied for Barnet Crafted door styles
- Painted hardwood supplied for EverCore™
- Painted or Stained hardwood supplied for Wood-Grain Foil door styles
- Reversible, may be used on either right or left end
- ***Not*** available in Morristown

☆ APFC standard when APC option is selected

PE
● APC
☆ APFC
❖ FPEB
CW
● RD
CH
❖ WR
RTK
RTKP
VTK

Rosette Desk Fluted Column

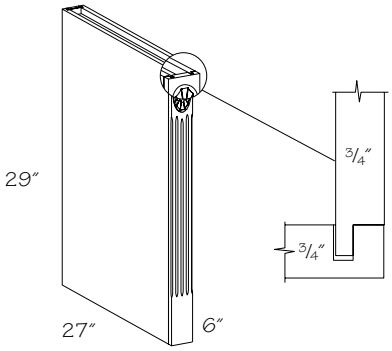

RDFC327

- Fluted front is 3/4″ solid wood; plain sawn wood supplied for quartersawn door styles
- Applied decorative rosette
- Quartersawn Oak door styles have quartersawn wood veneer end panels
- Plain sawn material supplied for Barnet Crafted door styles
- Finished front and both sides
- Reversible, may be used on either right or left end
- Painted hardwood supplied for EverCore™ and Thermofoil
- ***Not*** available in Rustic Alder door styles
- ***Not*** available in Wood-Grain Foil door styles
- ***Not*** available in Morristown

☆ APFC standard when APC option is selected

PE
● APC
☆ APFC
❖ FPEB
CW
● RD
CH
❖ WR
RTK
RTKP
VTK

Desk End Panel

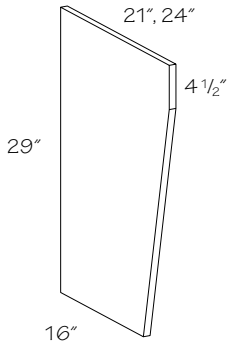

Viraguard

VDEP2129

VDEP2429

Wood Veneer

❄ **WDEP2129**

❄ **WDEP2429**

❄ Painted hardwood supplied for EverCore™ and Thermofoil

- Viraguard panel is 3/4" thick
- Wood veneer panel is 13/16" thick
- Unit designed to support one end of Desk Knee Drawer (DKD)
- Finished front and both sides
- Painted or Stained hardwood supplied for Wood-Grain Foil door styles
- ***Not*** available in Morristown; Melrose and Putnam supplied plain sawn

☆ APC panel only available in wood veneer

☆ APC panel is 11/16″ thick

PE
☆ APC
APFC
FPEB
CW
RD
CH
WR
RTK
RTKP
VTK

Square Desk End Panel

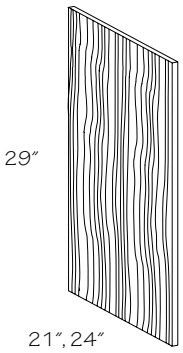

Viraguard	*Width x Height x Thickness*
■ **VDEP21 ▪S**	21 x 29 x 3/4"
■ **VDEP24 ▪S**	24 x 29 x 3/4"
Wood Veneer	
❄ **WDEP21 ▪S**	21 x 29 x 13/16"
❄ **WDEP24 ▪S**	24 x 29 x 13/16"

■ ***Not*** available in Morristown; Melrose and Putnam supplied plain sawn

❄ Painted hardwood supplied for EverCore™ and Thermofoil

- Edgebanded one long edge
- Finished to match exterior both sides
- Painted or Stained hardwood supplied for Wood-Grain Foil door styles

☆ APC panel only available in wood veneer

☆ APC panel is 11/16″ thick

PE
☆ APC
APFC
FPEB
CW
RD
CH
WR
RTK
RTKP
VTK

Matching Desk End Panel

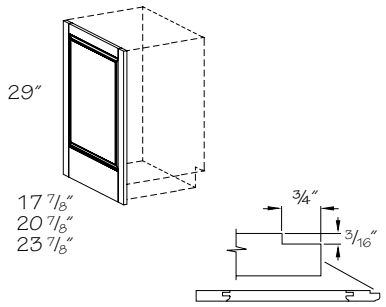

Standard edge detail—fits flush against 1/2″ end panel and behind face frame

Specify R or L

MDEP18 R or L
MDEP21 R or L
MDEP24 R or L

- 3/4″ thick panel with matching door edge profile on front edge only
- Inside of matching panel bottom rail will line up with inside bottom rail of door
- Left shown
- Field installation only
- Foil and slab door styles do ***not*** have grooves and will ***not*** fit flush against 1/2″ end panel. A 3/16″ shim is recommended
- ***Not*** available in Morristown; Melrose and Putnam supplied plain sawn
- ***Not*** available in mitered or Camby door styles; use End Panel–Mitered
- ***Not*** available in High-Gloss Foil door styles
- ☆ Wide Bottom Rail—field notch for toe kick



When designing with Matching End Panels the reveal will differ from the cabinet door height reveal. Matching End Panels cover the entire side of the cabinet. See drawing for exact measurements

PE	APC	APFC	FPEB	CW	RD	CH	WR	RTK	RTKP	VTK
				●		●	☆			

Matching Desk End Panel–Square Edges

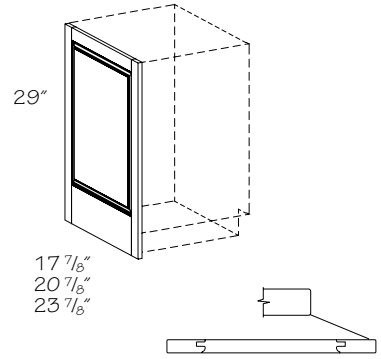

MDEP18 S
MDEP21 S
MDEP24 S

- 3/4″ thick panel with square edge front and back
- Inside of matching panel bottom rail will line up with inside bottom rail of door
- Field installation only
- Reversible, may be used on either right or left end
- ***Not*** available in High-Gloss Foil, Thermofoil or Wood-Grain Foil door styles
- ***Not*** available in mitered door styles; use End Panel–Mitered
- ***Not*** available in Morristown; Melrose and Putnam supplied plain sawn
- ☆ Wide Bottom Rail—field notch for toe kick

PE	APC	APFC	FPEB	CW	RD	CH	WR	RTK	RTKP	VTK
				●		●	☆			

Furniture Matching Desk End Panel

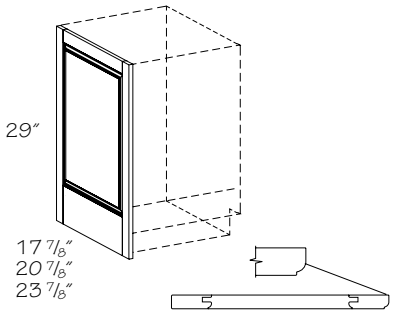

Will not fit flush against 1/2″end panel, a 3/16″ shim is recommended

Specify R or L

FMDEP18 R or L
FMDEP21 R or L
FMDEP24 R or L

- 3/4″ thick panel with matching door edge profile on front edge only
- Inside of matching panel bottom rail will line up with inside bottom rail of door
- Left shown
- Field installation only
- For use with Furniture Plywood Ends (FPEB)—flush ends
- ***Not*** available in mitered door styles; use End Panel–Mitered
- ***Not*** available in High-Gloss Foil or Wood-Grain Foil door styles
- ***Not*** available in Morristown; Melrose and Putnam supplied plain sawn
- ☆ Wide Bottom Rail—field notch for toe kick

PE	APC	APFC	FPEB	CW	RD	CH	WR	RTK	RTKP	VTK
				●		●	☆			

Matching Desk End Panel–Mitered

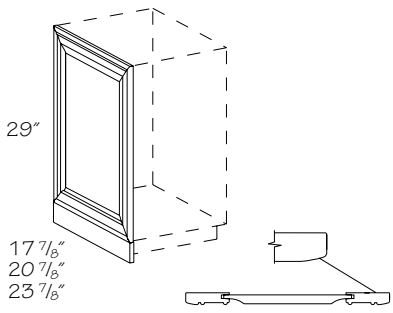

Will not fit flush against 1/2″end panel, a 3/16″ shim is recommended

M▪MDEP18
M▪MDEP21
M▪MDEP24

- 3/4″ thick panel with matching door edge profile on four sides
- Inside of matching panel bottom rail will line up with inside bottom rail of door
- Reversible, may be used on either right or left end
- Available in mitered and Camby door styles only
- Field installation only
- Toe kick shipped unattached
- ☆ Wide Bottom Rail—field notch for toe kick

PE	APC	APFC	FPEB	CW	RD	CH	WR	RTK	RTKP	VTK
				●		●	☆			

Toe Kick

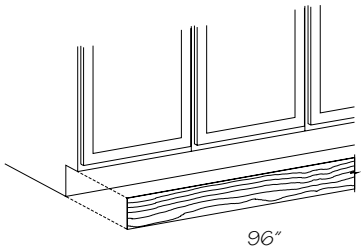

Black

† **BLTK8**

- 1/8" thick hardboard, 4 1/2" high

■ **MTK8**

- 1/8" thick hardboard, 4 1/2" high, laminated with matching Viraguard

Aluminum finish

MTK8 ▪A

- 1/16″ thick flexible laminate, 4 1/2″ high

Stainless finish

MTK8 ▪S

- 1/16″ thick flexible laminate, 4 1/2″ high

❊▲**WMTK8**

- 3/16" thick wood veneer, 4 1/2" high, to match

† Painted hardwood supplied for EverCore™

■ ***Not*** available in Morristown; Melrose and Putnam supplied plain sawn

❊ Painted hardwood supplied for EverCore™ and Thermofoil

▲ Painted or Stained hardwood supplied for Wood-Grain Foil door styles

- Edges are unfinished
- Field installation only
- ***Note:*** Matching toe kick is ***not*** automatically supplied with cabinets. It ***must*** be ordered as a separate item

Apply Shoe molding (SHO8) at the base of Matching Toe Kicks or Wood Matching Toe Kicks (MTK8 or WMTK8) for a nice, finished look.

Bookshelves

FW	18	12	48
code	width	depth	height

Construction Options and Modifications

❖ Included as standard
● Available with an upcharge
☆ Available with exceptions
(Blank) ***Not*** available

PE	Plywood Ends
APC	All Plywood Construction
APFC	All Plywood Furniture Construction
FPEB	Furniture Plywood Ends
MI	Matching Interior
DE	Integrated Decorative End
CW	Change Width
RD	Reduced Depth
CH	Change Height
WR	Wide Bottom Rail
XS	Extended Stile
GD	Glass Doors
RTK	Recessed Toe Kick
VTK	Void Toe Kick
TKD	Toe Kick Drawer

Note: Standard furniture cabinet box depth is 12", 18", 21" or 24", unless stated otherwise. Add door thickness and bumper for total depth.

Note: Unless noted, all Furniture Cabinets are manufactured in 3/4" Furniture Plywood Ends with matching wood veneer or Viraguard interiors. Due to toe kicks shipping separately on 96" high units, 96" furniture cabinets will be manufactured with 1/2" plywood end panels so the ends can be skinned to hide the seam. Skins must be ordered separately.

Material dimensions listed may vary slightly from actual dimensions of the product.

Specifications subject to change without notice.

Furniture Wall

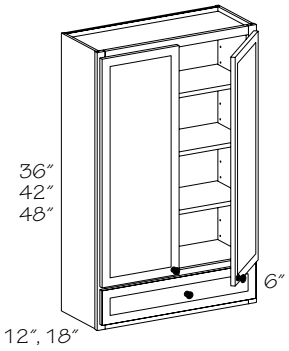

Specify R or L
Single Door
48" High
FW181248 R or L
FW181848 R or L

Double Door
36" High
FW271236 (Butt)
FW271836 (Butt)

42" High
FW271242 (Butt)
FW271842 (Butt)

48" High
❍ **FW241248 BUTT**
FW271248 (Butt)
❍ **FW241848 BUTT**
FW271848 (Butt)

❍ Change Width (CW) option ***not*** available

- Adjustable shelves
- 36" high has two shelves, 42" and 48" have three shelves
- Quartersawn Oak door styles have quartersawn wood veneer end panels
- Plain sawn material supplied for Barnet Crafted door styles

☆ APFC standard when APC option is selected
☆ Drawer becomes false front when cabinet depth is reduced to less than 12"

- Shelves shipped separately

	PE
●	APC
☆	APFC
❖	FPEB
❖	MI
	DE
☆	CW
☆	RD
●	CH
	WR
●	XS
●	GD
	RTK
	VTK
	TKD

Furniture Wall Top

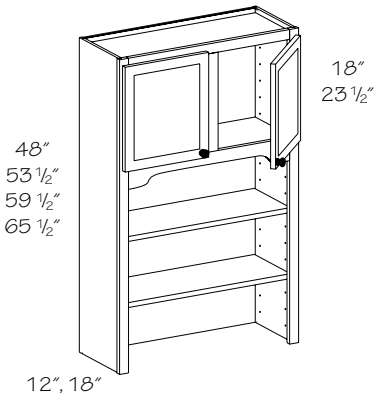

Specify R or L
Two shelves
48″ High
12″ Deep

❍❒ **FWT181248 R or L**
❒ **FWT211248 R or L**
❍❒ **FWT241248 BUTT**
❒ **FWT271248 (Butt)**
❒ **FWT301248**
❒ **FWT331248**
❒ **FWT361248**

18″ Deep

❍❒ **FWT181848 R or L**
❒ **FWT211848 R or L**
❍❒ **FWT241848 BUTT**
❒ **FWT271848 (Butt)**
❒ **FWT301848**
❒ **FWT331848**
❒ **FWT361848**

Two shelves
53 1/2″ High
12″ Deep

❍ **FWT181254 R or L**
FWT211254 R or L
❍ **FWT241254 BUTT**
FWT271254 (Butt)
FWT301254
FWT331254
FWT361254

18″ Deep

❍ **FWT181854 R or L**
FWT211854 R or L
❍ **FWT241854 BUTT**
FWT271854 (Butt)
FWT301854
FWT331854
FWT361854

Specify R or L
Three shelves
59 1/2″ High
12″ Deep

❍ **FWT181260 R or L**
FWT211260 R or L
❍ **FWT241260 BUTT**
FWT271260 (Butt)
FWT301260
FWT331260
FWT361260

18″ Deep

❍ **FWT181860 R or L**
FWT211860 R or L
❍ **FWT241860 BUTT**
FWT271860 (Butt)
FWT301860
FWT331860
FWT361860

Three shelves
65 1/2″ High
12″ Deep

❍ **FWT181266 R or L**
FWT211266 R or L
❍ **FWT241266 BUTT**
FWT271266 (Butt)
FWT301266
FWT331266
FWT361266

18″ Deep

❍ **FWT181866 R or L**
FWT211866 R or L
❍ **FWT241866 BUTT**
FWT271866 (Butt)
FWT301866
FWT331866
FWT361866

❍ Change Width (CW) option ***not*** available
❒ Change Height (CH) option ***not*** available

- Adjustable shelves
- 65 1/2″ high includes one adjustable shelf in upper section
- ***Not*** available in Morristown; Melrose and Putnam supplied plain sawn

☆ APFC standard when APC option is selected

- See Construction Options section of this book for Valance options
- Shelves shipped separately

	PE
●	APC
☆	APFC
❖	FPEB
❖	MI
	DE
☆	CW
●	RD
☆	CH
	WR
●	XS
●	GD
	RTK
	VTK
	TKD

Furniture Book Shelf–Top

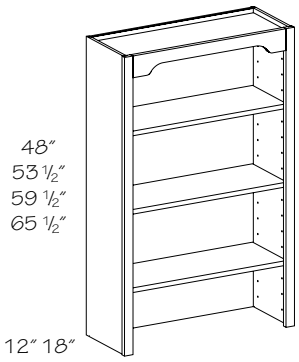

Three Shelves *48″ High* *12″ Deep*	*Four Shelves* *59 1/2″ High* *12″ Deep*
❍ **FBS181248**	❍ **FBS181260**
FBS211248	**FBS211260**
FBS241248	**FBS241260**
FBS271248	**FBS271260**
FBS301248	**FBS301260**
FBS331248	**FBS331260**
FBS361248	**FBS361260**
18″ Deep	*18″ Deep*
❍ **FBS181848**	❍ **FBS181860**
FBS211848	**FBS211860**
FBS241848	**FBS241860**
FBS271848	**FBS271860**
FBS301848	**FBS301860**
FBS331848	**FBS331860**
FBS361848	**FBS361860**
Three Shelves *53 1/2″ High* *12″ Deep*	*Four Shelves* *65 1/2″ High* *12″ Deep*
❍ **FBS181254**	❍ **FBS181266**
FBS211254	**FBS211266**
FBS241254	**FBS241266**
FBS271254	**FBS271266**
FBS301254	**FBS301266**
FBS331254	**FBS331266**
FBS361254	**FBS361266**
18″ Deep	*18″ Deep*
❍ **FBS181854**	❍ **FBS181866**
FBS211854	**FBS211866**
FBS241854	**FBS241866**
FBS271854	**FBS271866**
FBS301854	**FBS301866**
FBS331854	**FBS331866**
FBS361854	**FBS361866**

❍ Change Width (CW) option ***not*** available

- Adjustable shelves
- Painted hardwood supplied for EverCore™
- Painted or Stained hardwood supplied for Wood-Grain Foil door styles
- ***Not*** available in Morristown; Melrose and Putnam supplied plain sawn

☆ APFC standard when APC option is selected

- See Construction Options section of this book for Valance options
- Shelves shipped separately

	PE
●	APC
☆	APFC
❖	FPEB
❖	MI
●	DE
☆	CW
●	RD
●	CH
	WR
●	XS
	GD
	RTK
	VTK
	TKD

Furniture Book Shelf-84", 87", and 90" H

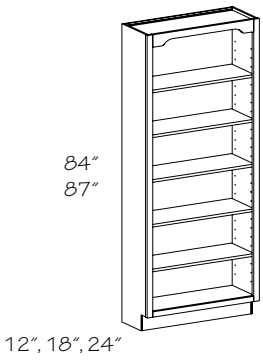

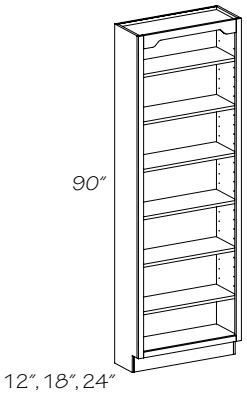

Five shelves 84" High 12" Deep	*Five shelves 87" High 12" Deep*	*Six Shelves 90" High 12" Deep*
❍† **FBS181284**	❍† **FBS181287**	❍† **FBS181290**
† **FBS211284**	† **FBS211287**	† **FBS211290**
† **FBS241284**	† **FBS241287**	† **FBS241290**
† **FBS271284**	† **FBS271287**	† **FBS271290**
† **FBS301284**	† **FBS301287**	† **FBS301290**
† **FBS331284**	† **FBS331287**	† **FBS331290**
† **FBS361284**	† **FBS361287**	† **FBS361290**
18" Deep	*18" Deep*	*18" Deep*
❍ **FBS181884**	❍ **FBS181887**	❍ **FBS181890**
FBS211884	**FBS211887**	**FBS211890**
FBS241884	**FBS241887**	**FBS241890**
FBS271884	**FBS271887**	**FBS271890**
FBS301884	**FBS301887**	**FBS301890**
FBS331884	**FBS331887**	**FBS331890**
FBS361884	**FBS361887**	**FBS361890**
24" Deep	*24" Deep*	*24" Deep*
❍ **FBS182484**	❍ **FBS182487**	❍ **FBS182490**
FBS212484	**FBS212487**	**FBS212490**
FBS242484	**FBS242487**	**FBS242490**
FBS272484	**FBS272487**	**FBS272490**
FBS302484	**FBS302487**	**FBS302490**
FBS332484	**FBS332487**	**FBS332490**
FBS362484	**FBS362487**	**FBS362490**

- Adjustable shelves
- Painted hardwood supplied for EverCore™
- Painted or Stained hardwood supplied for Wood-Grain Foil door styles
- ***Not*** available in Morristown; Melrose and Putnam supplied plain sawn

☆ APFC standard when APC option is selected

- See Construction Options section of this book for Valance options
- Shelves shipped separately

PE
● APC
☆ APFC
❖ FPEB
❖ MI
● DE
☆ CW
● RD
● CH
● WR
● XS
GD
● RTK
● VTK
☆ TKD

❍ Change Width (CW) option ***not*** available

† Toe Kick Drawer (TKD) option ***not*** available

Grey color coding indicates new product, size or code.

Furniture Book Shelf–93" and 96" H

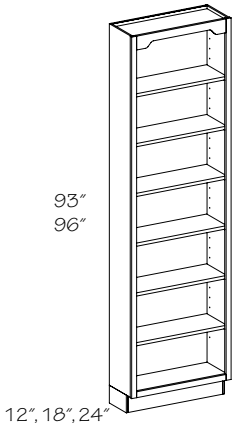

93" High 12" Deep	*96" High 12" Deep*
❍ **FBS181293**	❍ **FBS181296**
FBS211293	**FBS211296**
FBS241293	**FBS241296**
FBS271293	**FBS271296**
FBS301293	**FBS301296**
FBS331293	**FBS331296**
FBS361293	**FBS361296**
18" Deep	*18" Deep*
❍ **FBS181893**	❍ **FBS181896**
FBS211893	**FBS211896**
FBS241893	**FBS241896**
FBS271893	**FBS271896**
FBS301893	**FBS301896**
FBS331893	**FBS331896**
FBS361893	**FBS361896**
24" Deep	*24" Deep*
❍ **FBS182493**	❍ **FBS182496**
FBS212493	**FBS212496**
FBS242493	**FBS242496**
FBS272493	**FBS272496**
FBS302493	**FBS302496**
FBS332493	**FBS332496**
FBS362493	**FBS362496**

- 1/2" plywood ends with matching interiors
- Includes six adjustable shelves
- Painted hardwood supplied for EverCore™
- Painted or Stained hardwood supplied for Wood-Grain Foil door styles
- ***Not*** available in Morristown; Melrose and Putnam supplied plain sawn
- See Construction Options section of this book for Valance options
- Shelves shipped separately
- Toe kick shipped unattached

❖ PE
● APC
APFC
FPEB
❖ MI
● DE
☆ CW
● RD
● CH
WR
● XS
GD
RTK
VTK
TKD



Remember to order a 3/16" skin (WSK) for the exposed ends of 93" & 96" high furniture cabinets to conceal the seam between the loose toe kick and the cabinet.

❍ Change Width (CW) option ***not*** available

Grey color coding indicates new product, size or code.

Furniture Base 84" and 90" H

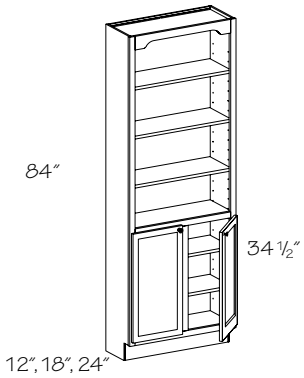

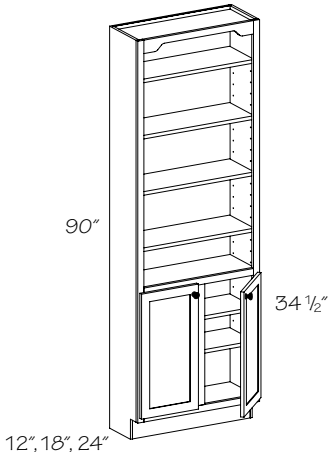

Specify R or L *84" High* *12" Deep*	*Specify R or L* *90" High* *12" Deep*
❍† **FB181284 R or L**	❍† **FB181290 R or L**
† **FB211284 R or L**	† **FB211290 R or L**
† **FB241284 R or L**	† **FB241290 R or L**
❍† **FB241284 BUTT**	❍† **FB241290 BUTT**
† **FB271284 (Butt)**	† **FB271290 (Butt)**
† **FB301284**	† **FB301290**
† **FB331284**	† **FB331290**
† **FB361284**	† **FB361290**
18" Deep	*18" Deep*
❍ **FB181884 R or L**	❍ **FB181890 R or L**
FB211884 R or L	**FB211890 R or L**
FB241884 R or L	**FB241890 R or L**
❍ **FB241884 BUTT**	❍ **FB241890 BUTT**
FB271884 (Butt)	**FB271890 (Butt)**
FB301884	**FB301890**
FB331884	**FB331890**
FB361884	**FB361890**
24" Deep	*24" Deep*
❍ **FB182484 R or L**	❍ **FB182490 R or L**
FB212484 R or L	**FB212490 R or L**
FB242484 R or L	**FB242490 R or L**
❍ **FB242484 BUTT**	❍ **FB242490 BUTT**
FB272484 (Butt)	**FB272490 (Butt)**
FB302484	**FB302490**
FB332484	**FB332490**
FB362484	**FB362490**

- Includes adjustable shelves in open section; three shelves in 84" H and four shelves in 90" H cabinets
- Two adjustable shelves in lower base section
- ***Not*** available in Morristown; Melrose and Putnam supplied plain sawn
- See Construction Options section of this book for Valance options

☆ APFC standard when APC option is selected

- Shelves shipped separately

	PE
●	APC
☆	APFC
❖	FPEB
❖	MI
	DE
☆	CW
●	RD
●	CH
●	WR
●	XS
●	GD
●	RTK
●	VTK
☆	TKD

❍ Change Width (CW) option ***not*** available

† Toe Kick Drawer (TKD) option ***not*** available

Furniture Base 96" H

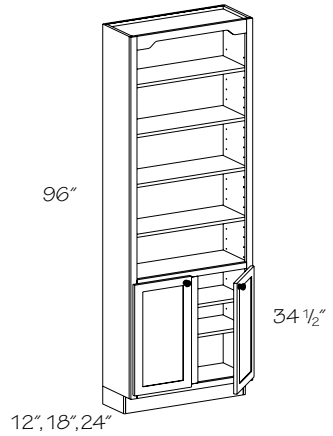

Specify R or L *12" Deep*	*Specify R or L* *24" Deep*
❍ **FB181296 R or L**	❍ **FB182496 R or L**
FB211296 R or L	**FB212496 R or L**
❍ **FB241296 BUTT**	❍ **FB242496 BUTT**
FB241296 R or L	**FB242496 R or L**
FB271296 (Butt)	**FB272496 (Butt)**
FB301296	**FB302496**
FB331296	**FB332496**
FB361296	**FB362496**
18" Deep	
❍ **FB181896 R or L**	
FB211896 R or L	
❍ **FB241896 BUTT**	
FB241896 R or L	
FB271896 (Butt)	
FB301896	
FB331896	
FB361896	

- 1/2" plywood ends with matching interiors
- Includes four adjustable shelves in open section
- Two adjustable shelves in lower base section
- ***Not*** available in Morristown; Melrose and Putnam supplied plain sawn
- See Construction Options section of this book for Valance options
- Shelves shipped separately
- Toe kick shipped unattached



Remember to order a 3/16" skin (WSK) for the exposed ends of 93" & 96" high furniture cabinets to conceal the seam between the loose toe kick and the cabinet.

❖	PE
●	APC
	APFC
	FPEB
❖	MI
	DE
☆	CW
●	RD
●	CH
	WR
●	XS
●	GD
	RTK
	VTK
	TKD

❍ Change Width (CW) option ***not*** available

Wood Tops

CWT	22	96
code	depth	width

Construction Options and Modifications

APC All Plywood Construction

❖ Included as standard
● Available with an upcharge
☆ Available with exceptions
(Blank) ***Not*** available

Wood tops are constructed of 5/8" engineered wood with wood veneer on one side. Front is finished with 3/4" or 49/64" thick by 1 9/16" high solid wood edge molding.

Note: Only one (1) top will be manufactured per 48" or 96" blank.

Material dimensions listed may vary slightly from actual dimensions of the product.

Specifications subject to change without notice.

Traditional Wood Tops

● APC

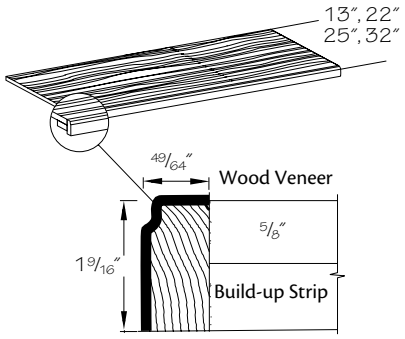

48" Wide	*Peninsula 48" WIde*
TWT1348	**PTWT1348**
TWT2248	**PTWT2248**
TWT2548	**PTWT2548**
TWT3248	**PTWT3248**
96" Wide	*96" Wide*
TWT1396	**PTWT1396**
TWT2296	**PTWT2296**
TWT2596	**PTWT2596**
TWT3296	**PTWT3296**

- Finished dimensions and finished edges must be specified. Finished dimensions are available in 1/16" increments only
- Tops will be supplied for straight applications only including peninsula and islands with up to four finished edges
- Wood tops are built to size
- Painted hardwood supplied for EverCore™ and Thermofoil
- Painted or Stained hardwood supplied for Wood-Grain Foil door styles
- ***Not*** available in Rustic Alder door styles
- ***Not*** available in Morristown; Melrose and Putnam supplied plain sawn
- ***Note:*** Heavy lines indicate finished edges

Contemporary Wood Tops

● APC

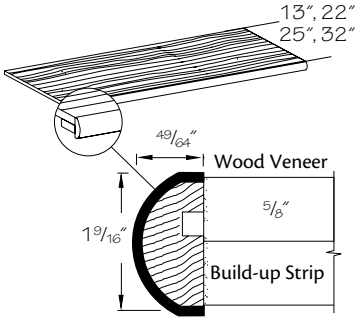

48" Wide	*Peninsula 48" Wide*
CWT1348	**PCWT1348**
CWT2248	**PCWT2248**
CWT2548	**PCWT2548**
CWT3248	**PCWT3248**
96" WIde	*96" Wide*
CWT1396	**PCWT1396**
CWT2296	**PCWT2296**
CWT2596	**PCWT2596**
CWT3296	**PCWT3296**

- Finished dimensions and finished edges must be specified. Finished dimensions are available in 1/16" increments only
- Tops will be supplied for straight applications only including peninsula and islands with up to four finished edges
- Wood tops are built to size
- Painted hardwood supplied for EverCore™ and Thermofoil
- Painted or Stained hardwood supplied for Wood-Grain Foil door styles
- ***Not*** available in Rustic Alder door styles
- ***Not*** available in Morristown; Melrose and Putnam supplied plain sawn
- ***Note:*** Heavy lines indicate finished edges

Angled Wood Tops

● APC

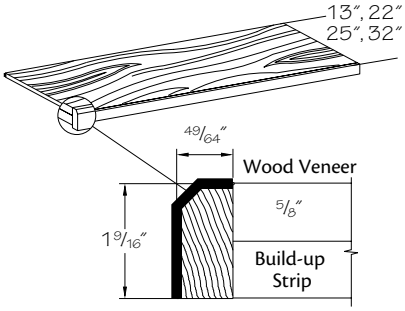

48" Wide	*Peninsula 48" Wide*
AWT1348	**PAWT1348**
AWT2248	**PAWT2248**
AWT2548	**PAWT2548**
AWT3248	**PAWT3248**
96" Wide	*96" Wide*
AWT1396	**PAWT1396**
AWT2296	**PAWT2296**
AWT2596	**PAWT2596**
AWT3296	**PAWT3296**

- Finished dimensions and finished edges must be specified. Finished dimensions are available in 1/16" increments only
- Tops will be supplied for straight applications only including peninsula and islands with up to four finished edges
- Wood tops are built to size
- Painted hardwood supplied for EverCore™ and Thermofoil
- Painted or Stained hardwood supplied for Wood-Grain Foil door styles
- ***Not*** available in Morristown; Melrose and Putnam supplied plain sawn
- ***Note:*** Heavy lines indicate finished edges

Clipped Corner Wood Tops

APC

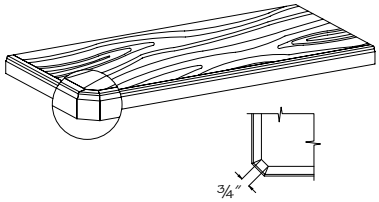

CCB	Clipped Corner Both
CCL	Clipped Corner Left
CCR	Clipped Corner Right

- 45° clipped corners
- Finished Ends supplied when Clipped Corner option is specified
- Painted hardwood supplied for EverCore™
- ***Note:*** Heavy lines indicate finished edges

TWT2296-CCR	PTWT2296-CCR
TWT2296-CCL	PTWT2296-CCL
TWT2296-CCB	PTWT2296-CCB

Finished End Wood Tops

APC

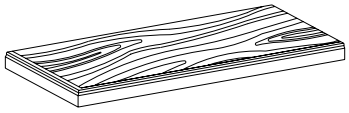

FEB	Finished End Both
FEL	Finished End Left
FER	Finished End Right

- Edge molding is miter cut at 90° corners
- Painted hardwood supplied for EverCore™
- ***Note:*** Heavy lines indicate finished edges

TWT2296	PTWT2296
TWT2296-FER	PTWT2296-FER
TWT2296-FEL	PTWT2296-FEL
TWT2296-FEB	PTWT2296-FEB

Furniture Accessories

WFEP	13	96
code	depth	height

Construction Options and Modifications

❖ Included as standard
● Available with an upcharge
☆ Available with exceptions
(Blank) ***Not*** available

PE	Plywood Ends
APC	All Plywood Construction
APFC	All Plywood Furniture Construction
FPEB	Furniture Plywood Ends
MI	Matching Interior
CW	Change Width
RD	Reduced Depth
CH	Change Height
XS	Extended Stile

Note: Unless noted, all furniture cabinets are manufactured in furniture plywood ends with matching wood or Viraguard interiors.

Material dimensions listed may vary slightly from actual dimensions of the product.

Specifications subject to change without notice.

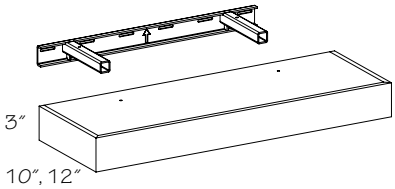

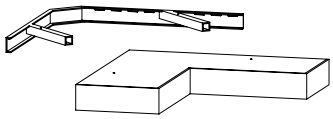

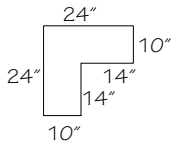

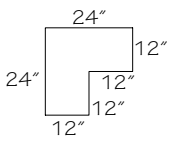

Floating Shelves

10″ Deep	*12″ Deep*
FLS24	**FLS2412**
FLS30	**FLS3012**
FLS36	**FLS3612**
FLS42	**FLS4212**
FLS48	**FLS4812**
FLS60	**FLS6012**
Corner	*Corner*
FLSC2410	**FLSC2412**

- 50 lbs. capacity
- Painted hardwood supplied for EverCore™
- Painted or Stained hardwood supplied for Wood-Grain Foil door styles
- ***Not*** available with Antique, Burnished, Distressed or Vintage finishes
- ***Not*** available in High-Gloss Foil door styles
- ***Not*** available in Quartersawn or Rustic door styles
- ***Not*** trimmable

PE
❖ APC
APFC
FPEB
MI
CW
RD
CH
XS

New

Floating Shelf - Cove

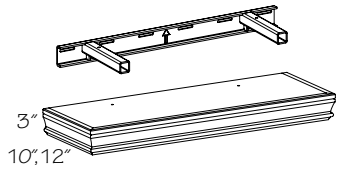

10″ Deep	*12″ Deep*
FLS24 •C	**FLS2412 •C**
FLS30 •C	**FLS3012 •C**
FLS36 •C	**FLS3612 •C**
FLS42 •C	**FLS4212 •C**
FLS48 •C	**FLS4812 •C**
FLS60 •C	**FLS6012 •C**

Grey color coding indicates new product, size or code.

- 50 lbs. capacity
- Painted hardwood supplied for EverCore™
- Painted or Stained hardwood supplied for Wood-Grain Foil door styles
- ***Not*** available with Antique, Burnished, Distressed or Vintage finishes
- ***Not*** available in High-Gloss Foil door styles
- ***Not*** available in Quartersawn or Rustic door styles
- Matching face molding sold separately - 8′ pieces
- Overall depth and width is greater than the nominal dimension
- Molding is applied to the face and both ends
- ***Not*** trimmable

PE
● APC
APFC
FPEB
MI
CW
RD
CH
XS

New

Floating Shelf - Sterling

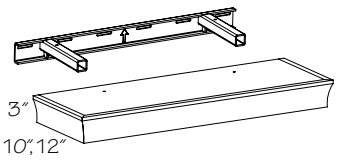

10″ Deep	*12″ Deep*
FLS24 ▪S	FLS2412 ▪S
FLS30 ▪S	FLS3012 ▪S
FLS36 ▪S	FLS3612 ▪S
FLS42 ▪S	FLS4212 ▪S
FLS48 ▪S	FLS4812 ▪S
FLS60 ▪S	FLS6012 ▪S

Grey color coding indicates new product, size or code.

- 50 lbs. capacity
- Painted hardwood supplied for EverCore™
- Painted or Stained hardwood supplied for Wood-Grain Foil door styles
- ***Not*** available with Antique, Burnished, Distressed or Vintage finishes
- ***Not*** available in High-Gloss Foil door styles
- ***Not*** available in Quartersawn or Rustic door styles
- Molding is applied to the face and both ends
- Matching face molding sold separately - 8′ pieces
- Overall depth and width is greater than the nominal dimension
- ***Not*** trimmable

PE
❖ APC
APFC
FPEB
MI
CW
RD
CH
XS

Furniture Drawer 6" H

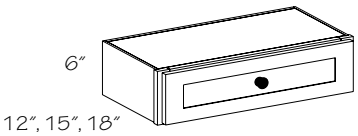

FD15-30*

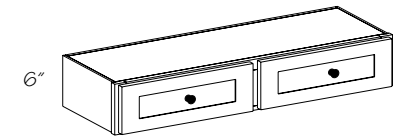

FD30*-36

12″ Deep	*18″ Deep*	*24″ Deep*
❍ FD151206	❍ FD151806	❍ FD152406
FD181206	FD181806	FD182406
FD211206	FD211806	FD212406
FD241206	FD241806	FD242406
FD271206	FD271806	FD272406
❊ FD301206	❊ FD301806	❊ FD302406
FD361206	FD361806	FD362406
15″ Deep	*21″ Deep*	
❍ FD151506	❍ FD152106	
FD181506	FD182106	
FD211506	FD212106	
FD241506	FD242106	
FD271506	FD272106	
❊ FD301506	❊ FD302106	
FD361506	FD362106	

❍ Change Width (CW) option ***not*** available
❊ Two drawer unit in full overlay door styles

- Framed construction
- 1/2″ thick panels

❖ PE
● APC
● APFC
● FPEB
MI
☆ CW
RD
CH
● XS

Furniture Drawer 12" H

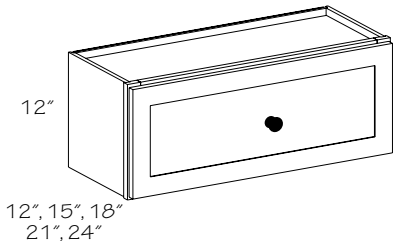

12″ Deep	*18″ Deep*	*24″ Deep*
❍ FD151212	❍ FD151812	❍ FD152412
FD181212	FD181812	FD182412
FD211212	FD211812	FD212412
FD241212	FD241812	FD242412
FD271212	FD271812	FD272412
FD301212	FD301812	FD302412
FD361212	FD361812	FD362412
15″ Deep	*21″ Deep*	
❍ FD151512	❍ FD152112	
FD181512	FD182112	
FD211512	FD212112	
FD241512	FD242112	
FD271512	FD272112	
FD301512	FD302112	
FD361512	FD362112	

❍ Change Width (CW) option ***not*** available

- Framed construction

● PE
● APC
● APFC
● FPEB
MI
☆ CW
RD
CH
● XS

Adjustable Drawer Dividers

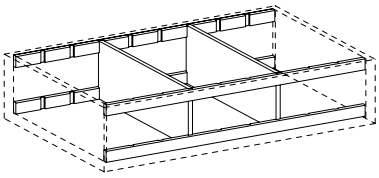

1ADD

Single Replacement Dividers Only

ADDIV•7•12 7" High, 12" Deep Drawers
ADDIV•7•15 7" High, 15" Deep Drawers
ADDIV•7•18 7" High, 18" Deep Drawers
ADDIV•7•21 7" High, 21" Deep Drawers
ADDIV•7•24 7" High, 24" Deep Drawers

- Dividers are 1/2" thick and can be spaced approximately 3" apart
- Fits Furniture Drawer 12" H (FD_12)
- For 24"–27" wide cabinets, two dividers supplied
- For 30"–36" wide cabinets, three dividers supplied
- Available factory installed only

PE
APC
APFC
FPEB
MI
CW
RD
CH
XS

Furniture End Panels

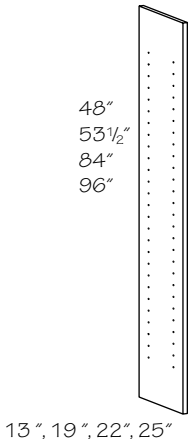

Wood Veneer
48" High
WFEP1348
WFEP1948
WFEP2248
WFEP2548
53 1/2" High
WFEP1354
WFEP1954
WFEP2254
WFEP2554
84" High
WFEP1384
WFEP1984
WFEP2284
WFEP2584
96" High
WFEP1396
WFEP1996
WFEP2296
WFEP2596

Center Drilled
Wood Veneer
48" High
WFEP1348 •CE
WFEP1948 •CE
WFEP2248 •CE
WFEP2548 •CE
53 1/2" High
WFEP1354 •CE
WFEP1954 •CE
WFEP2254 •CE
WFEP2554 •CE
84" High
WFEP1384 •CE
WFEP1984 •CE
WFEP2284 •CE
WFEP2584 •CE
96" High
WFEP1396 •CE
WFEP1996 •CE
WFEP2296 •CE
WFEP2596 •CE

Peninsula
Wood Veneer
48" High
WPFEP1348
WPFEP1948
WPFEP2248
WPFEP2548
53 1/2" High
WPFEP1354
WPFEP1954
WPFEP2254
WPFEP2554
84" High
WPFEP1384
WPFEP1984
WPFEP2284
WPFEP2584
96" High
WPFEP1396
WPFEP1996
WPFEP2296
WPFEP2596

- Matching 13/16" wood veneer both sides with shelf hole drilling on one side; both sides for center drilled shelves
- Quartersawn Qak door styles are matching 13/16" quartersawn wood veneer
- Plain sawn material supplied for Barnet Crafted door styles
- Wood Veneer Panels will have painted or stained hardwood supplied for Wood-Grain Foil door styles
- Painted hardwood supplied for EverCore™ and Thermofoil
- Edgebanded one long edge; two long edges on Peninsula shelves
- Satin chrome furniture shelf rests available; see Hardware Section of this book

☆ APC panel only available in wood veneer
☆ APC panel is 11/16" thick

PE
☆ APC
APFC
FPEB
MI
CW
RD
CH
XS

Furniture Shelves

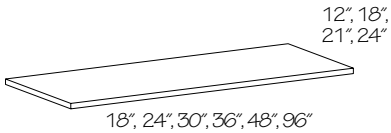

Wood Veneer	*Peninsula Wood Veneer*
18" Wide	*18" Wide*
WFS1218	**WPFS1218**
WFS1818	**WPFS1818**
WFS2118	**WPFS2118**
WFS2418	**WPFS2418**
24" Wide	*24" Wide*
WFS1224	**WPFS1224**
WFS1824	**WPFS1824**
WFS2124	**WPFS2124**
WFS2424	**WPFS2424**
30" Wide	*30" Wide*
WFS1230	**WPFS1230**
WFS1830	**WPFS1830**
WFS2130	**WPFS2130**
WFS2430	**WPFS2430**
36" Wide	*36" Wide*
WFS1236	**WPFS1236**
WFS1836	**WPFS1836**
WFS2136	**WPFS2136**
WFS2436	**WPFS2436**
48" Wide	*48" Wide*
WFS1248	**WPFS1248**
WFS1848	**WPFS1848**
WFS2148	**WPFS2148**
WFS2448	**WPFS2448**
96" Wide	*96" Wide*
WFS1296	**WPFS1296**
WFS1896	**WPFS1896**
WFS2196	**WPFS2196**
WFS2496	**WPFS2496**

- Matching 13/16" wood veneer both sides
- Quartersawn Qak door styles are matching 13/16" quartersawn wood veneer
- Plain sawn material supplied for Barnet Crafted door styles
- Edgebanded one long and two short edges; all edges for Peninsula shelves
- Painted hardwood supplied for EverCore™ and Thermofoil

☆ APC panel only available in wood veneer

☆ APC panel is 11/16" thick

- Wood Veneer shelves will have painted or stained hardwood supplied for High-Gloss Foil and Wood-Grain Foil door styles

PE
☆ APC
APFC
FPEB
MI
CW
RD
CH
XS

Furniture Panels

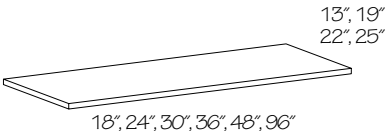

Wood Veneer *18" Wide*	*Peninsula* *Wood Veneer* *18" Wide*
WFP1318	**WPFP1318**
WFP1918	**WPFP1918**
WFP2218	**WPFP2218**
WFP2518	**WPFP2518**
24" Wide	*24" Wide*
WFP1324	**WPFP1324**
WFP1924	**WPFP1924**
WFP2224	**WPFP2224**
WFP2524	**WPFP2524**
30" Wide	*30" Wide*
WFP1330	**WPFP1330**
WFP1930	**WPFP1930**
WFP2230	**WPFP2230**
WFP2530	**WPFP2530**
36" Wide	*36" Wide*
WFP1336	**WPFP1336**
WFP1936	**WPFP1936**
WFP2236	**WPFP2236**
WFP2536	**WPFP2536**
48" Wide	*48" Wide*
WFP1348	**WPFP1348**
WFP1948	**WPFP1948**
WFP2248	**WPFP2248**
WFP2548	**WPFP2548**
96" Wide	*96" Wide*
WFP1396	**WPFP1396**
WFP1996	**WPFP1996**
WFP2296	**WPFP2296**
WFP2596	**WPFP2596**

- Matching 13/16" wood veneer
- Quartersawn Qak door styles are matching 13/16" quartersawn wood veneer
- Edgebanded one long and two short edges; all edges for Peninsula shelves
- Painted hardwood supplied for EverCore™ and Thermofoil

☆ APC panel only available in wood veneer

☆ APC panel is 11/16" thick

- Wood Veneer Panels will have painted or stained hardwood supplied for Wood-Grain Foil door styles

PE
☆ APC
APFC
FPEB
MI
CW
RD
CH
XS

Toe Kick

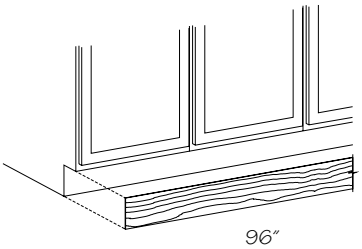

Black

† **BLTK8**
- 1/8" thick hardboard, 4 1/2" high

■ **MTK8**
- 1/8" thick hardboard, 4 1/2" high, laminated with matching Viraguard

Aluminum finish

MTK8 ▪A
- 1/16" thick flexible laminate, 4 1/2" high

Stainless finish

MTK8 ▪S
- 1/16" thick flexible laminate, 4 1/2" high

❊▲**WMTK8**
- 3/16" thick wood veneer, 4 1/2" high, to match

† Painted hardwood supplied for EverCore™

■ ***Not*** available in Morristown; Melrose and Putnam supplied plain sawn

❊ Painted hardwood supplied for EverCore™ and Thermofoil

▲ Painted or Stained hardwood supplied for Wood-Grain Foil door styles

- Edges are unfinished
- Field installation only
- ***Note:*** Matching toe kick is ***not*** automatically supplied with cabinets. It must be ordered as a separate item

Apply Shoe molding (SHO8) at the base of Matching Toe Kicks or Wood Matching Toe Kicks (MTK8 or WMTK8) for a nice, finished look.

PE
APC
APFC
FPEB
MI
CW
RD
CH
XS

Design Ideas

Construction Options and Modifications

Creating signature furniture pieces requires careful consideration and planning. KraftMaid® Cabinetry makes it easy with a wide variety of choices to personalize any space. The following are some example configurations to help you in designing the ideal furniture piece for your customer.

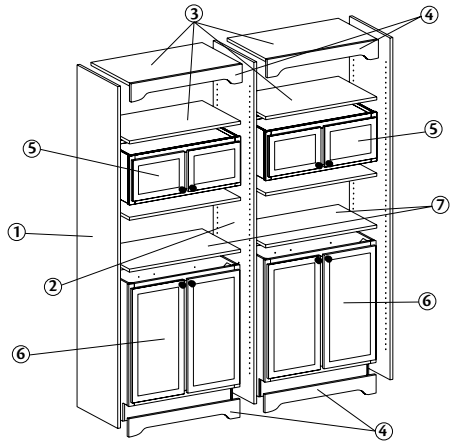

Furniture Component System

Create your own furniture component system using standard wall and base cabinets

1. Furniture end panel
2. Center furniture end panel
3. Furniture shelf
4. Furniture valance
5. Standard wall cabinet
6. Base cabinet with full-height doors
7. Furniture panel

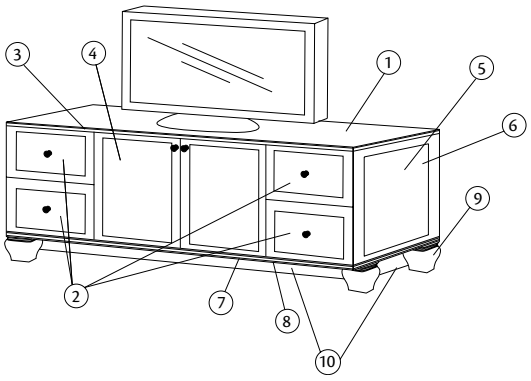

Flat Screen Design Idea 1

1. Wood Top
2. Furniture Drawer
3. Stack Molding
4. Wall Cabinet
5. Wood Skin (apply one to each side)
6. Replacement Door (apply one to each side)
7. Furniture Shelf
8. Single Bead Edge (applied to front and side edges)
9. Cove Legs
10. Matching Toe Kick*

*Build a recessed toe kick platform for added support and apply Matching Toe Kick. Recommend to recess 9″

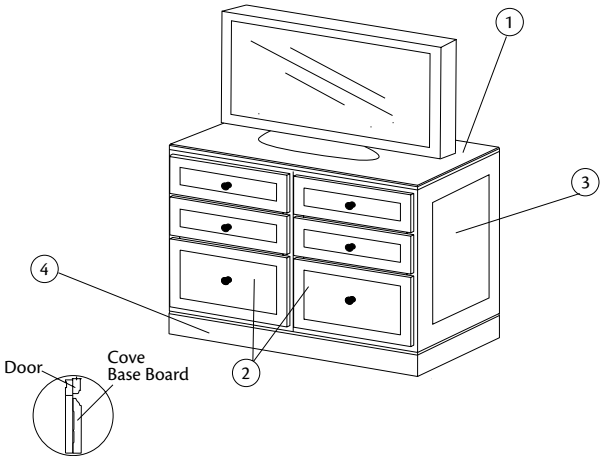

Flat Screen Design Idea 2

1. Wood Top
2. Desk Drawer Cabinet (Wide Rail Plain)
3. Replacement Door
4. Cove Base Board

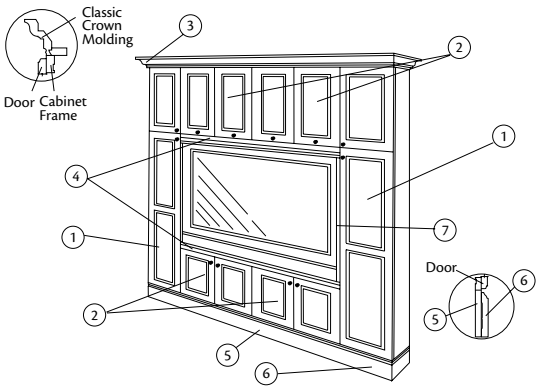

Flat Screen Design Idea 3

1. Utility cabinets (with Wide Rail Plain; Reduced Depth to 18″)
2. Wall Cabinets (w/Butt doors; Increased Depth to 18″)*
3. Classic Crown Molding
4. Furniture Shelves
5. Solid Stock
6. Cove Base Board
7. Skin or panel, applied to wall, behind TV. ***Not*** intended for supporting TV.

* Build a flush toe kick platform for added support

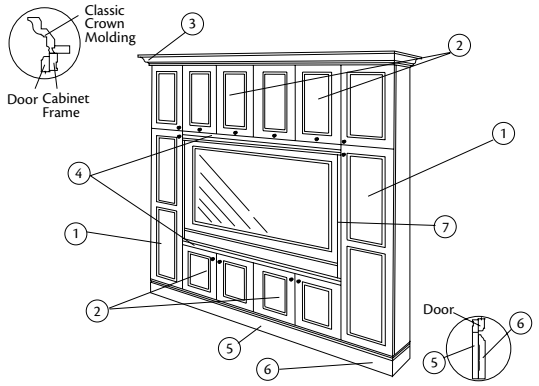

Flat Screen Design Idea 4

1. Utility cabinets (with Wide Rail Plain; Reduced Depth to 18″)
2. Vanity Cabinets (with Wide Rail Plain)
3. Classic Crown Molding
4. Furniture Shelves (pull forward 3/4″)
5. Sold Stock
6. Cove Base Board
7. Furniture Panels

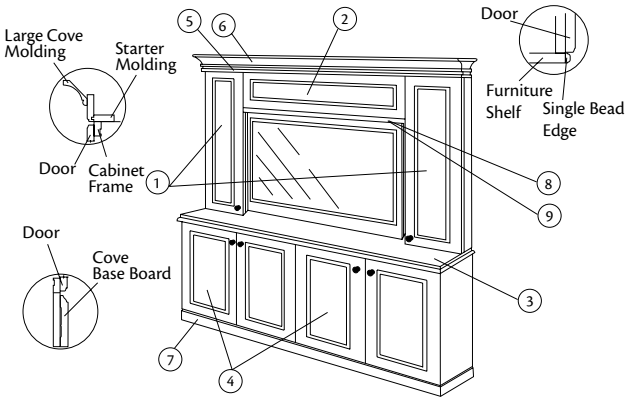

Flat Screen Design Idea 5

1. Wall cabinets (Reduced Depth to fit TV Specs; with Furniture Plywood Ends)
2. Wall Cabinets-CFO (installed horizontally at 12″ deep; secure door)
3. Wood Top (Finished Both Ends)
4. Vanity Cabinets (with Wide Rail Plain; Furniture Plywood Ends)
5. Starter Molding
6. Large Cove Molding
7. Cove Base Board
8. Furniture Shelf
9. Single Bead Edge (applied to front of shelf)

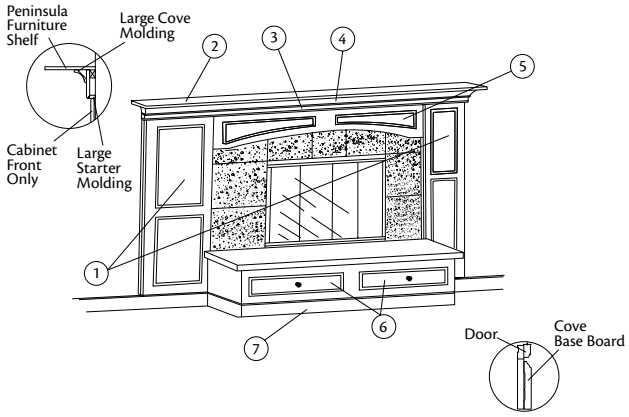

Hearth Design Idea 1

1. Utility Cabinet-CFO
2. Peninsula Furniture Shelf
3. Large Starter Molding
4. Large Cove Molding
5. Flat Panel Valance
6. 12″ high Furniture Drawer (with Furniture Plywood Ends)*
7. Cove Base Board

* Build a 4 1/2″ high platform under Furniture Drawers for support

Hearth Design Idea 2

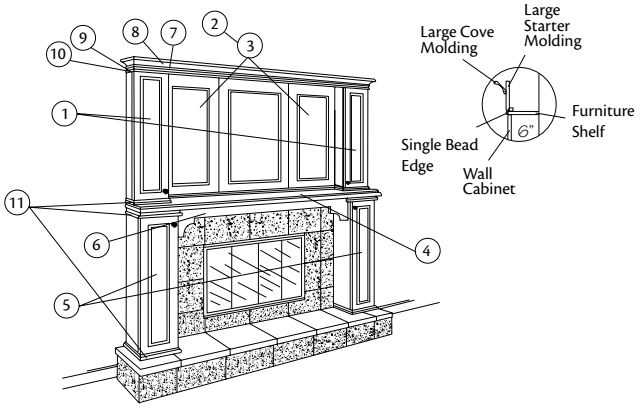

1. Wall cabinets (Reduced Depth to 6″ with Furniture Plywood Ends)
2. Wall Skin (cut skin to wall)
3. Replacement Door
4. Wood Top
5. Wall Cabinet (with Furniture Plywood Ends)
6. Crown Valance
7. Large Starter Molding
8. Large Cove Molding
9. Furniture Shelf
10. Single Bead Edge (applied to edge of shelf)
11. Ogee Molding (above and below cabinets)

Hearth Design Idea 3

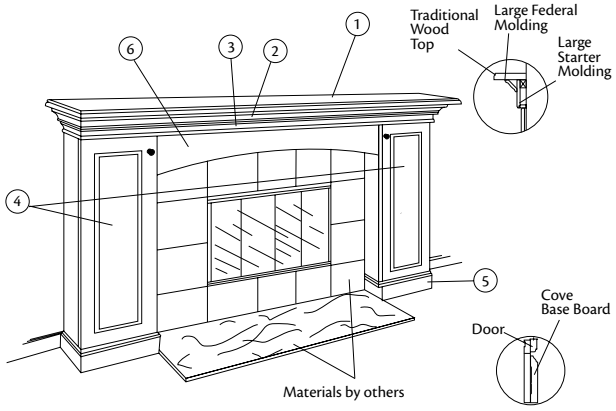

1. Traditional Wood Top
2. Large Federal Molding
3. Large Starter Molding
4. Wall cabinets (Reduced Depth to 6; Furniture Plywood Ends)*
5. Cove Base Board
6. Cove Valance

* Build a flush toe kick platform under for support

Hearth Design Idea 4

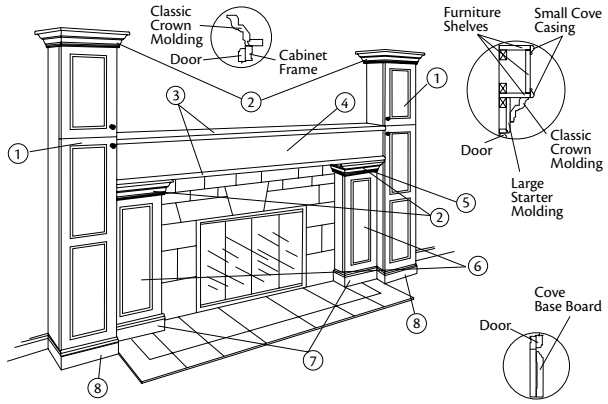

1. Utility Cabinet (Wide Rail Plain; Furniture Plywood Ends)
2. Classic Crown Molding
3. Small Cove Casing
4. Furniture Shelf
5. Large Starter Molding
6. Wall cabinets (Reduced Depth to 6; Furniture Plywood Ends)*
7. Solid Stock
8. Cove Base Board

* Build a flush toe kick platform under for support

Hearth Design Idea 5

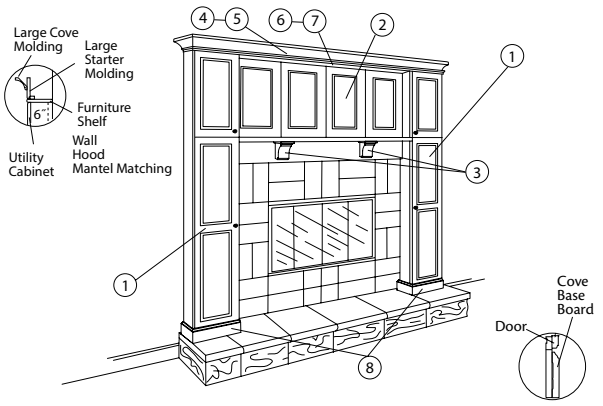

1. Utility Cabinet (Wide Rail Plain; Furniture Plywood Ends; Reduced Depth to 6″)
2. Wall Hood Mantle Matching
3. Cove Corbel
4. Large Starter Molding
5. Large Cove Molding
6. Furniture Shelf
7. Single Bead Edge
8. Cove Base Board

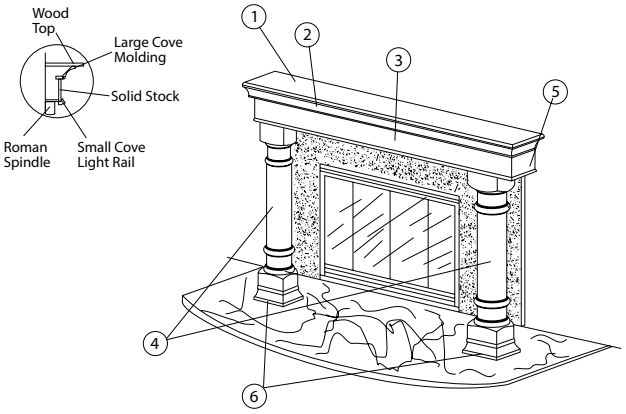

Hearth Design Idea 6

1. Wood Top
2. Large Cove Molding
3. Solid Stock
4. Roman Spindles
5. Small Cove Light Rail
6. Large Cove Molding (inverted)

Diagonal Installation of Standard Furniture Cabinets

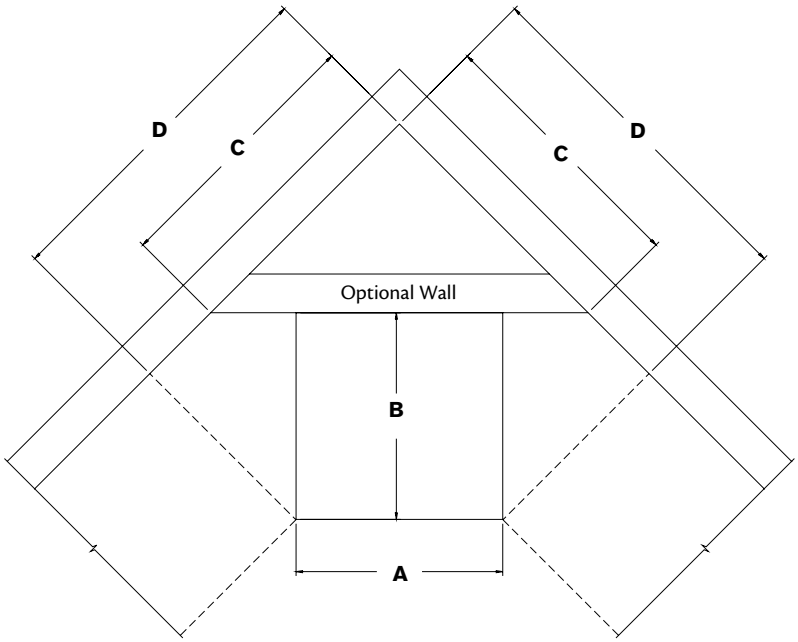

Cabinet Width "A"	Cabinet Width "B"	Wall Dimensions "C"	Wall Dimensions "D"	Cabinet Depth "B"	Wall Dimensions "C"	Wall Dimensions "D"
18"	12"	20 ⅜"	25 ⅜"	18"	23 ¼"	30 ¾"
24"	12"	24 ⅝"	29 ⅝"	18"	27 ½"	35"
30"	12"	28 ⅞"	33 ⅞"	18"	31 ¾"	39 ¼"
36"	12"	33 ⅛"	38 ⅛"	18"	36"	43 ½"

Passport Cabinets

AU	18	12	84
code	width	depth	height

Material dimensions listed may vary slightly from actual dimensions of the product.

Specifications subject to change without notice.

Construction Options and Modifications

❖ Included as standard
● Available with an upcharge
☆ Available with exceptions
(Blank) ***Not*** available

PE	Plywood Ends
APC	All Plywood Construction
APFC	All Plywood Furniture Construction
FPEB	Furniture Plywood Ends
MI	Matching Interior
OE	Operational End
RD	Reduced Depth
IF	Inverted Frame
TWR	Top Wide Rail
XS	Extended Stile
GD	Glass Doors
RTK	Recessed Toe Kick

Passport Series

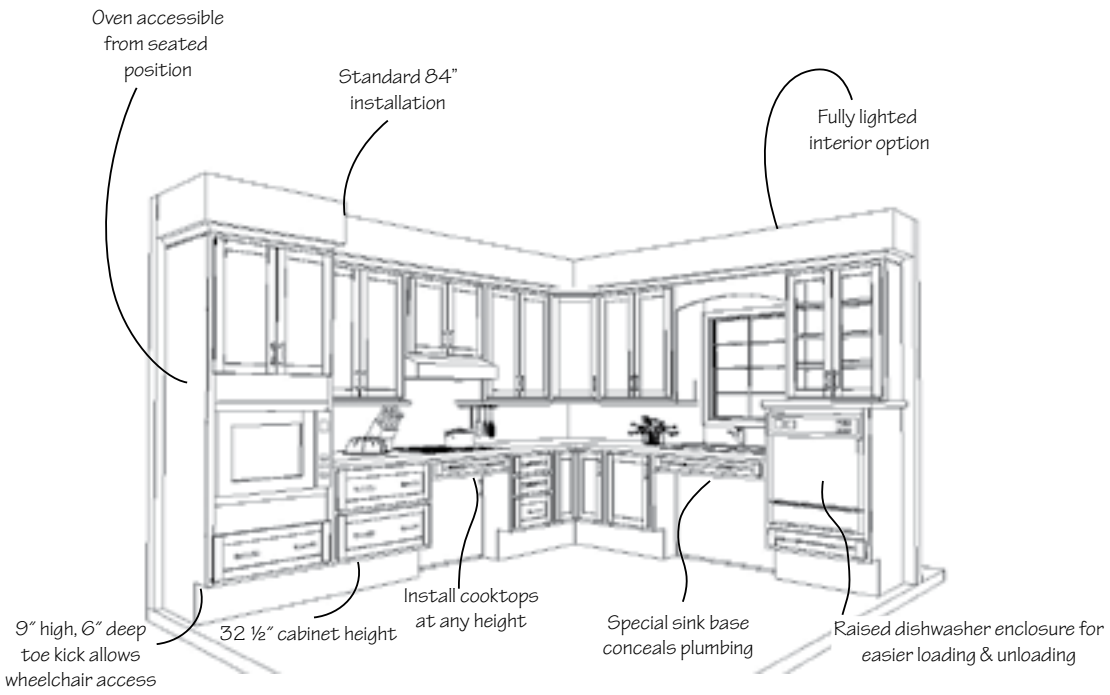

Recommendations for Maximum Accessibility:

- Order 36" high Wall cabinets installed at 82" or 84" height
- Increase depth of Wall cabinets to 15" for easier use
- Minimize use of Base cabinets with doors, select drawer or tambour cabinets

Door Style Availability:

- Passport SKU's are available in all 1/2" overlay door styles and are now available with your choice of Whisper Touch™ or knife hinges (see door style availability below). Whisper Touch™ hinge features an integrated mechanism that closes doors softly and quietly and is adjustable six ways for perfect alignment. Knife hinge, which open 180 degrees, are recommended to accommodate wheelchair users.

- **1/2" overlay door styles with Whisper Touch™ hinge:**
  - Belmont Roman
  - Belmont Square
  - Fox Chase Roman–Half
  - Fox Chase Square–Half
  - Grandview Roman–Half
  - Grandview Square–Half
  - Hanley Roman
  - Hanley Square
  - Harper
  - Lyndale–Half
  - Marquette Roman–Half
  - Marquette Square–Half

- **1/2" overlay door styles with knife hinge:**
  - Belmont Roman
  - Belmont Square
  - Grandview Cherry Roman–Half
  - Grandview Cherry Square–Half
  - Hanley Roman
  - Hanley Square

Design Recommendations:

- Consider specifying Under Cabinet Panels for wall cabinets available for wheelchair users

Passport cabinetry is available in 1/2" overlay door styles only.

Passport Base Single Door w/Tray Divider

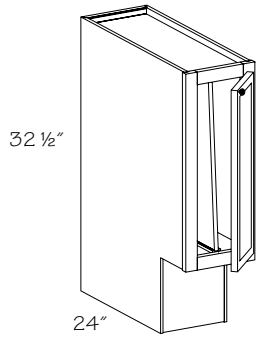

Specify R or L

AB9 R or L

- Full-height door
- One full-height tray divider

●	PE
●	APC
●	APFC
●	FPEB
●	MI
	OE
●	RD
	IF
	TWR
●	XS
	GD
●	RTK

Passport Base Pantry Pull-out

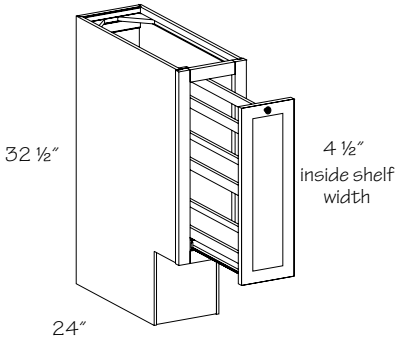

ABPP9

- Unit slides on heavy duty full extension runners with integrated buffer
- Two fixed wood shelves attached to a full-height door
- Pull-out Heights:
  Top shelf—8 1/4″
  Bottom shelf—7 3/4″

●	PE
●	APC
●	APFC
●	FPEB
	MI
	OE
	RD
	IF
	TWR
●	XS
	GD
●	RTK

New

Passport Base Cabinet w/Deluxe Rollout Trays

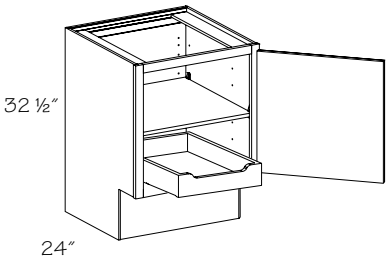

Specify R or L

ABFH12 R or L•DXFWT
ABFH15 R or L•DXFWT
ABFH18 R or L•DXFWT
ABFH21 R or L•DXFWT

Specify R or L

ABFH24 BUTT•DXFWT
ABFH27 (Butt)•DXFWT
ABFH30 BUTT•DXFWT
ABFH33 BUTT•DXFWT
ABFH36 BUTT•DXFWT

- Full-height door
- One adjustable shelf
- One adjustable, full-width Roll-out Tray (ROT)
- ☆ Minimum Reduced Depth (RD) is 18″

Grey color coding indicates new product, size or code.

●	PE
●	APC
●	APFC
●	FPEB
●	MI
	OE
☆	RD
	IF
	TWR
●	XS
●	GD
●	RTK

New

Passport Base Cabinet w/2 Deluxe Rollout Trays

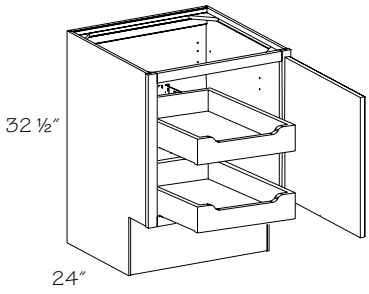

Specify R or L

ABFH12 R or L•2DXFWT
ABFH15 R or L•2DXFWT
ABFH18 R or L•2DXFWT
ABFH21 R or L•2DXFWT
ABFH24 BUTT•2DXFWT
ABFH27 (Butt)•2DXFWT
ABFH30 BUTT•2DXFWT
ABFH33 BUTT•2DXFWT
ABFH36 BUTT•2DXFWT

- Full-height door
- ☆ Minimum Reduced Depth (RD) is 18″

Grey color coding indicates new product, size or code.

●	PE
●	APC
	APFC
●	FPEB
●	MI
	OE
☆	RD
	IF
	TWR
●	XS
●	GD
●	RTK

Passport Base Two Drawer

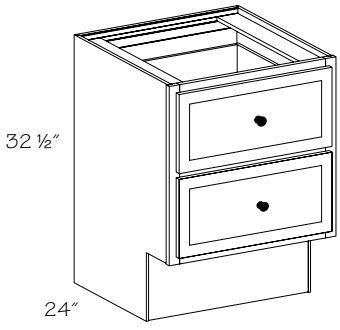

ABD12 •2
ABD15 •2
ABD18 •2
ABD21 •2
ABD24 •2
ABD27 •2
ABD30 •2
ABD36 •2

- Two deep drawers

●	PE
●	APC
●	APFC
●	FPEB
	MI
	OE
●	RD
	IF
	TWR
●	XS
	GD
●	RTK

Passport cabinetry is available in 1/2" overlay door styles only.

Passport Base Three Drawer

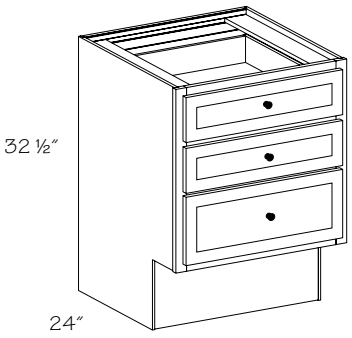

ABD12 ▪3
ABD15 ▪3
ABD18 ▪3
ABD21 ▪3
ABD24 ▪3

- Two standard drawers
- One deep drawer

●	PE
●	APC
●	APFC
●	FPEB
	MI
	OE
●	RD
	IF
●	TWR
●	XS
	GD
●	RTK

Passport Base Three Drawer w/Cutting Center

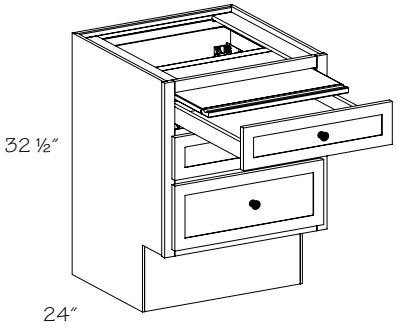

ABD15 ▪3CC
ABD18 ▪3CC
ABD21 ▪3CC
ABD24 ▪3CC

- One standard drawer
- One deep drawer
- 2 1/4″ high drawer box with cutting board installed above
- Cutting board is removable

●	PE
●	APC
●	APFC
●	FPEB
	MI
	OE
	RD
	IF
	TWR
●	XS
	GD
●	RTK

Passport Sink Base

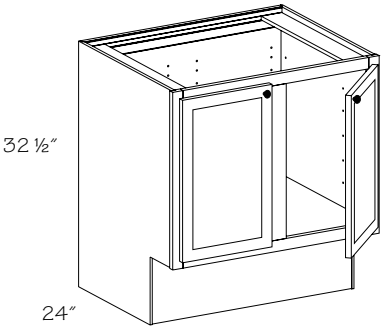

ASB30
ASB36

- Full-height door
- No shelf
- Designed for use as a range or sink base
- Includes a Touch-Up Kit (TUK)

●	PE
●	APC
●	APFC
●	FPEB
●	MI
	OE
●	RD
	IF
	TWR
●	XS
●	GD
●	RTK

Passport Sink Front

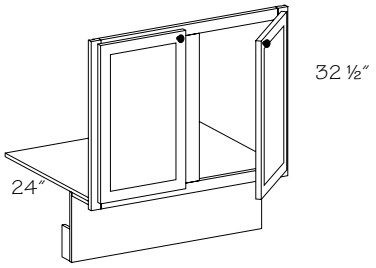

ASF30
ASF36

- Includes floor; shipped loose
- UTK ***not*** available
- Unit is ***not*** trimmable
- Includes a Touch-Up Kit (TUK)

	PE
●	APC
	APFC
	FPEB
	MI
	OE
	RD
	IF
	TWR
●	XS
●	GD
	RTK

Passport Plumbing Skirt and Sink Collar Usage

Side view

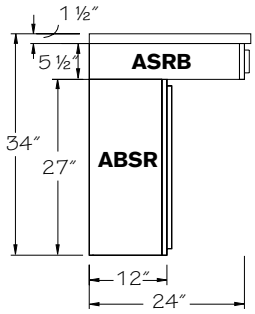

Top view

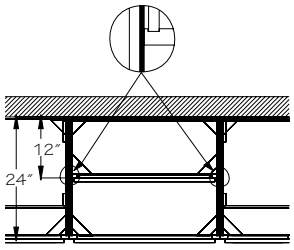

For proper fit, install WSK or VSK on base and tall cabinets next to ABSR

Passport cabinetry is available in 1/2" overlay door styles only.

Passport Sink Collar

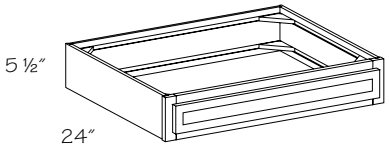

ASRB30
ASRB36

- Designed for use with Passport Plumbing Skirt (ABSR)
- For use with sink or cooktop
- Includes a Touch-Up Kit (TUK)

●	PE
●	APC
●	APFC
●	FPEB
	MI
	OE
●	RD
	IF
	TWR
●	XS
	GD
	RTK

Passport Plumbing Skirt

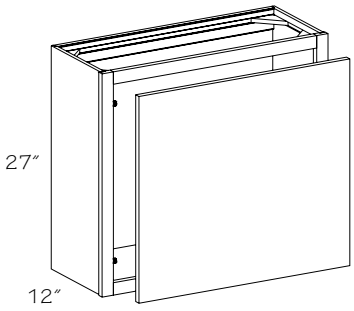

ABSR30
ABSR36

- Install with back to wall, creates a 12″ deep knee space
- Removable front
- Water lines and drains including P-Trap ***must not*** be installed any more than 6″ from wall
- Be sure to check your local Accessible Design codes for necessary clearances
- Cabinet Front Only (CFO) option is available for clearance flexibility
- Includes a Touch-Up Kit (TUK)
- Painted hardwood supplied for EverCore™
- ***Note:*** Adjacent cabinets ***must*** have skins or Furniture Plywood Ends (FPEB) applied

●	PE
●	APC
●	APFC
●	FPEB
	MI
	OE
●	RD
	IF
	TWR
●	XS
	GD
	RTK

Passport Base Microwave

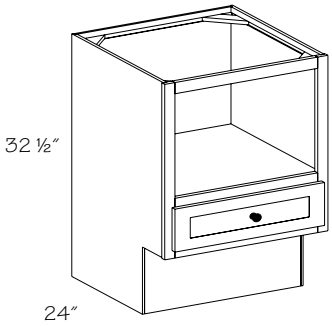

	Opening Width
ABMW21	18″
ABMW24	21″
ABMW27	24″

- One standard drawer
- Opening height 14″
- Designed for countertop style microwaves

●	PE
●	APC
●	APFC
●	FPEB
●	MI
	OE
●	RD
	IF
	TWR
●	XS
	GD
●	RTK

Passport Base Dishwasher Cabinet

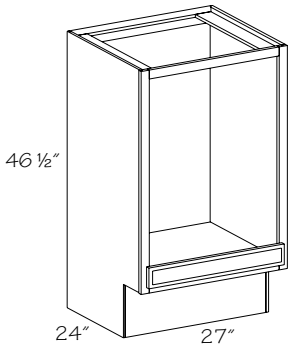

ABDW27

- Allows for 11″ raised installation of standard dishwashers
- Finished top required
- Plywood floor
- False drawer front

●	PE
●	APC
●	APFC
●	FPEB
	MI
	OE
	RD
	IF
	TWR
●	XS
	GD
	RTK

Passport Base Blind Corner w/Pull-out

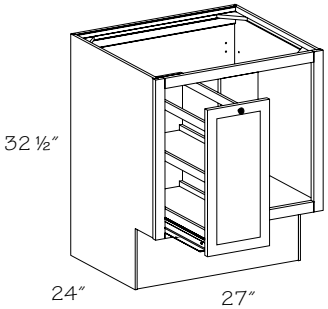

Specify R or L Blind
ABBC36 R or L-BPP

- Requires a minimum of 39″ wall space
- Blind panel (stile) is 6″ wide
- ***Must*** be pulled min. 12″; max. 15″
- Pull-out Heights:
  Top shelf—8 1/4″
  Bottom shelf—7 3/4″
- Right blind shown
- Filler included
- Unit slides on heavy duty full extension runners with integrated buffer
- ***Note:*** If using decorative hardware on adjacent cabinets, allow at least 40″ wall space to allow for clearance of pull-out unit

●	PE
●	APC
●	APFC
●	FPEB
●	MI
	OE
	RD
	IF
	TWR
●	XS
	GD
●	RTK

Passport cabinetry is available in 1/2″ overlay door styles only.

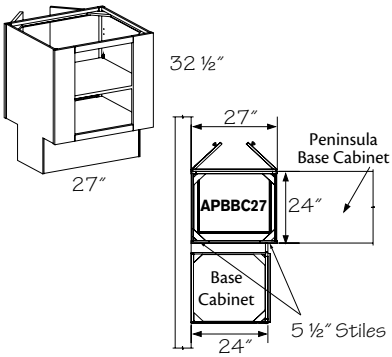

Passport Peninsula Base Blind Corner

APBBC27

- One adjustable shelf
- For use as a starter cabinet for peninsula
- Two 5 1/2" stiles on blind side allow cabinet to be used as right or left
- Reversible

●	PE
●	APC
●	APFC
●	FPEB
●	MI
	OE
●	RD
	IF
	TWR
●	XS
●	GD
	RTK

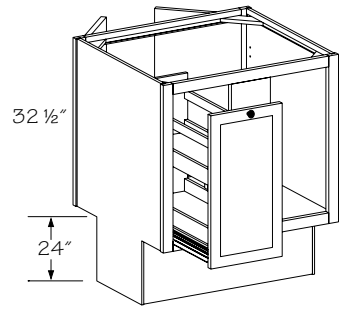

Passport Peninsula Base Blind Corner w/Pull-out

Specify R or L
APBBC36 R or L•BPP

- Requires a minimum of 39" wall space
- Blind panel (stile) is 6" wide
- ***Must*** be pulled min. 12"; max. 15"
- Pull-out Heights:
  Top shelf—8 1/4"
  Bottom shelf—7 3/4"
- Right blind shown
- Filler included
- Unit slides on heavy duty full extension runners with integrated buffer
- ***Note:*** If using decorative hardware on adjacent cabinets, allow at least 40" wall space to allow for clearance of pull-out unit

●	PE
●	APC
●	APFC
●	FPEB
●	MI
	OE
	RD
	IF
	TWR
●	XS
	GD
	RTK

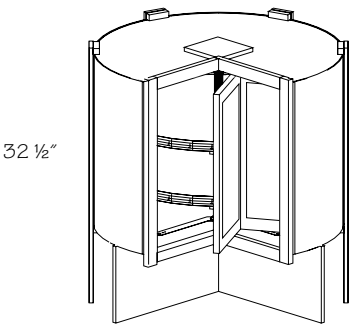

Passport Lazy Susan

ALS36

- Two pie-cut, 28" diameter, interior Viraguard rotating shelves
- Requires 36" of wall space
- Doors are attached to and rotate with the Lazy Susan
- Contrasting Back Options (CBEB, CPLB, CVGR) ***not*** available

	PE
●	APC
	APFC
	FPEB
	MI
	OE
	RD
	IF
	TWR
●	XS
	GD
	RTK

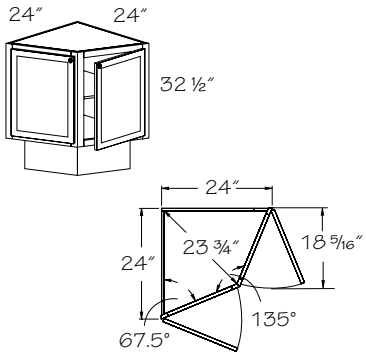

Passport Base End Corner

ABEC24

- One fixed shelf
- Can be installed on either right or left end
- Contrasting Back Options (CBEB, CPLB, CVGR) ***not*** available

●	PE
●	APC
	APFC
	FPEB
●	MI
	OE
	RD
	IF
	TWR
	XS
●	GD
	RTK

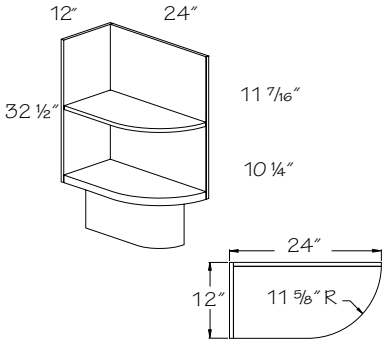

Passport Solid Wood Base End Open Shelf

Specify R or L
ASBEOS1224 R or L

- One fixed shelf
- 5/8" wood veneer on sides and back
- 1 3/16" thick bottom shelf
- 11 5/8" radius
- Solid wood construction on shelves only
- Painted hardwood supplied for EverCore™
- Toe kick is finished
- Left shown
- For Curved Moldings, see Molding section in Decorative Enhancements
- ☆ Shelves remain solid when APC option is chosen; sides and back will be 11/16" matching wood veneer plywood
- ☆ Reduced Depth (RD) available in 3" increments to a minimum of 12"

	PE
☆	APC
	APFC
	FPEB
❖	MI
	OE
☆	RD
	IF
	TWR
	XS
	GD
	RTK

Passport cabinetry is available in 1/2" overlay door styles only.

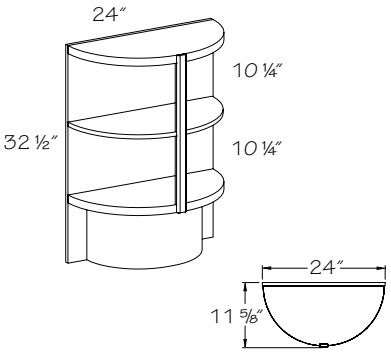

Passport Peninsula Solid Wood Base End Open Shelf

ASPBEOS2412

- Two fixed shelves
- 5/8″ wood veneer on back panel
- 1 3/16″ thick top and bottom shelves
- 11 5/8″ radius
- Solid wood construction on shelves only
- Painted hardwood supplied for EverCore™
- Toe kick is finished
- Back may be notched in field for continuous toe kick applications
- For Curved Moldings, see Molding section in Decorative Enhancements

☆ Shelves remain solid when APC option is chosen; back will be 11/16″ matching wood veneer plywood

	PE
☆	APC
	APFC
	FPEB
❖	MI
	OE
	RD
	IF
	TWR
	XS
	GD
	RTK

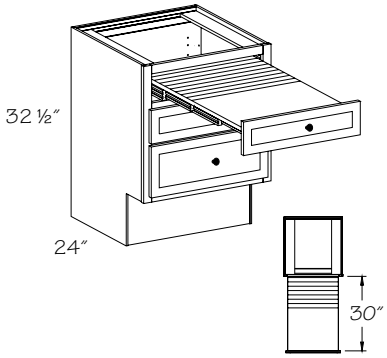

Passport Base Pull-out Table

ABDT24

- One standard drawer
- One deep drawer
- Top constructed of laminated Maple melamine
- Load capacity 160 lbs.
- ***Not*** for use as a freestanding cabinet. ***Must*** be secured to floor or wall
- ***Not*** designed to be used as a cutting board

●	PE
●	APC
●	APFC
●	FPEB
	MI
	OE
	RD
	IF
	TWR
●	XS
	GD
●	RTK

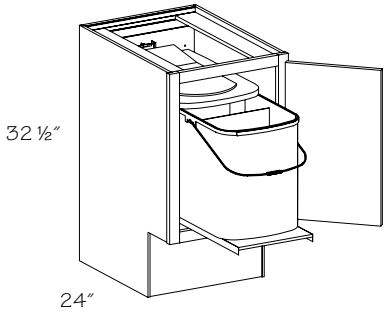

Passport Base Wastebasket

Specify R or L

ABWB18 R or L

ABWB21 R or L

- 30 qt. capacity
- Basket slides on full extension glides
- Attached handle for easy lifting
- Divided for recycling
- Basket(s) are easily removable for emptying or cleaning

●	PE
●	APC
●	APFC
●	FPEB
	MI
	OE
	RD
	IF
	TWR
●	XS
	GD
●	RTK

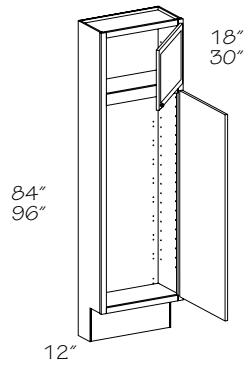

Passport Utility Cabinets 12" Deep

Specify R or L

84" High

AU181284 R or L

AU241284 R or L

96" High

❄ **AU181296 R or L**

❄ **AU241296 R or L**

❄ Includes two adjustable shelves in upper section

- Toe kick is shipped separately on 96″ high cabinets

☆ Operational End (OE) is ***not*** available with Reduced Depth (RD) options

- ***Note:*** Shelf Kit (SK) for lower section ***must*** be ordered separately; see Shelving section of this book

●	PE
●	APC
●	APFC
●	FPEB
●	MI
☆	OE
●	RD
●	IF
	TWR
●	XS
●	GD
●	RTK

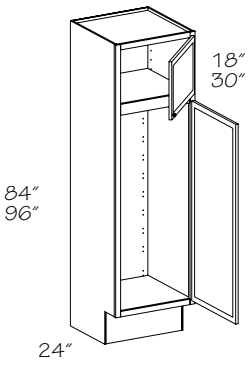

Passport Utility Cabinets 24" Deep

Specify R or L

84" High

AU182484 R or L

AU242484 R or L

96" High

❄ **AU182496 R or L**

❄ **AU242496 R or L**

❄ Includes two adjustable shelves in upper section

- Toe kick is shipped separately on 96″ high cabinets

☆ Operational End (OE) is ***not*** available with Reduced Depth (RD) options

- ***Note:*** Shelf Kit (SK) for lower section ***must*** be ordered separately; see Shelving section of this book

●	PE
●	APC
●	APFC
●	FPEB
●	MI
☆	OE
●	RD
●	IF
	TWR
●	XS
●	GD
●	RTK

Passport cabinetry is available in 1/2" overlay door styles only.

Passport Single Oven Cabinet w/3" Stiles

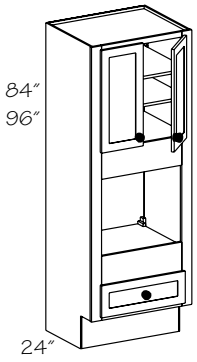

84" High

❊ **AOC302484 S▪BD**

96" High

◆ **AOC302496 S▪BD**

❊ Includes two adjustable shelves in upper section

◆ Includes three adjustable shelves in upper section

- Toe kick is shipped separately on 96" high cabinets
- Oven Trim Kit (overlay panel) available for a full overlay look; see Tall Accessories section of this book
- Doors will ***not*** align when stacking a Wall Refrigerator cabinet. AOC's have a 2 1/2" reveal on frame stiles for Knife Hinge door styles
- ***Note:*** Maximum recommended oven installed height is 48" for a seated person

●	PE
●	APC
●	APFC
●	FPEB
●	MI
	OE
●	RD
	IF
	TWR
●	XS
●	GD
●	RTK

Cutout dimensions

Cabinet Width	Min. Width	Max. Width	Min. Height	*Max. Height
30"	24"	28"	21"	34"

* Maximum cutout opening is dependent on appliance size and use of molding or trim kit. Distance between top doors and bottom drawer is 36 ⅛"

Passport cabinetry is available in 1/2" overlay door styles only.

Passport Cabinet Accessories

AWSK	24	32
code	width	height

Construction Options and Modifications

❖ Included as standard
● Available with an upcharge
☆ Available with exceptions
(Blank) ***Not*** available

PE Plywood Ends
APC All Plywood Construction
APFC All Plywood Furniture Construction
FPEB Furniture Plywood Ends
MI Matching Interior
XS Extended Stile

Material dimensions listed may vary slightly from actual dimensions of the product.

Specifications subject to change without notice.

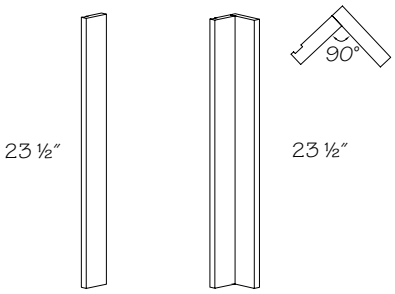

ABF ABF 3x3

Passport Base Filler

ABF3
ABF6
ABF3X3

- 3/4" thick solid wood
- Finished one side only
- Painted hardwood supplied for EverCore™
- No toe kick

PE ❖
APC ❖
APFC ❖
FPEB ❖
MI ❖
XS ❖

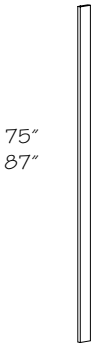

Passport Tall Filler

84" High
ATF3•84
ATF6•84
96" High
ATF3•96
ATF6•96

- 3/4" thick solid wood
- Finished one side only
- Painted hardwood supplied for EverCore™
- No toe kick

PE ❖
APC ❖
APFC ❖
FPEB ❖
MI ❖
XS ❖

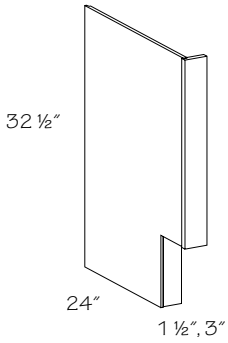

Passport Base End Panel w/Stile

Specify R or L
ABEP 1 1/2 R or L
ABEP3 R or L

- Left shown
- Exterior finished to match, interior is Natural Birch Viraguard
- Painted hardwood supplied for EverCore™

PE ●
APC ●
APFC ●
FPEB ●
MI ●
XS ❖

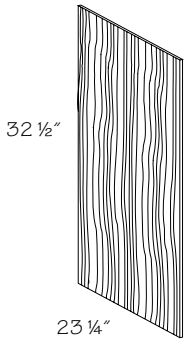

Passport Base Skin

Wood Veneer
AWSK2432

- 3/16" thick
- Painted hardwood supplied for EverCore™

PE ❖
APC ❖
APFC ❖
FPEB ❖
MI ❖
XS ❖

Passport Lazy Susan End Panel

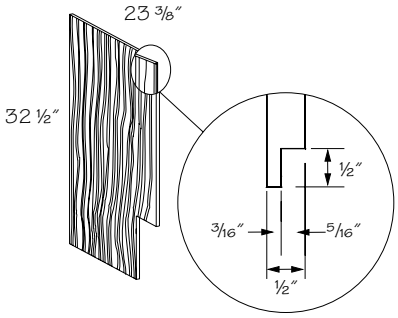

Specify R or L

ALSEP R or L

- Requires 3/16″ of wall space
- Notched to fit behind stile of Lazy Susan front frame
- Painted hardwood supplied for EverCore™

●	PE
●	APC
●	APFC
●	FPEB
●	MI
	XS

Passport Matching Toe Kick

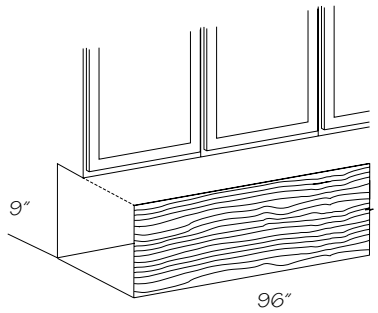

AWMTK8

- 3/16″ thick wood veneer, 9″ high; stained to match
- Edges are unfinished
- Field installation only
- Painted hardwood supplied for EverCore™
- ***Note:*** Matching toe kick is ***not*** automatically supplied with cabinets. It ***must*** be ordered as a separate item

Apply Shoe molding (SHO8) at the base of Matching Toe Kicks or Wood Matching Toe Kicks (MTK8 or WMTK8) for a nice, finished look.

	PE
	APC
	APFC
	FPEB
	MI
	XS

Notes

Custom Appliance Panels

Construction Options and Modifications

CAPDW
code

This program enables you to order custom-designed appliance panels for kitchens or other living spaces.

Material dimensions listed may vary slightly from actual dimensions of the product.

Specifications subject to change without notice.

Custom Appliance Panel–General Guidelines

- An appliance make and model number can be provided and KraftMaid® will recommend a panel solution based on that information. A sample drawing will be sent back for approval
- Specific panel dimensions can be recorded and KraftMaid® will finish the panels to your specifications
- Check appliance manufacturer's specifications for any additional material, such as shims, spacers, etc., that may be needed before placing any order. Spacer panels are ***not*** supplied
- Due to potential extended lead times, CAP orders may ***not*** ship with associated kitchen orders. We recommend shipping CAP orders to your store to avoid additional home delivery fees
- If a veneer center panel door style is selected, appliance panel doors will have a solid wood center panel machined to resemble the veneer center panel
- Grain orientation will match that of the selected door style
- Slab door style orders are limited to the Universal Frame Only option within this program
- Only center rail modifications are available when ordering the CAPDR.W.CR and CAPDR.B.CR (location and height). Outside stiles and rails ***cannot*** be modified
- Stiles and rails will be the same size and profile as the selected door style (with the exception of Frame Only doors)
- Refer to appliance manufacturer's specification to ensure ice/water dispenser trim will accommodate a 3/4" to 1" thick panel
- Frame Only panels (CAPFO & UCAPFO) will ***not*** be supplied with applied molding on applicable door styles
- Frame Only panels (CAPFO) are ***not*** available in mitered door styles. We recommend using the Universal Frame Only panels
- Universal Frame Only panels (UCAPFO) will have a 3/32" radius on both inside and outside edges of stiles and rails
- Ice/water dispenser cutouts will have 3/16" radius corners
- Onlay panels will react to climate conditions causing varying degrees of joint separation. This is a natural reaction in wood product and therefore is ***not*** covered under warranty
- ***Not*** available in EverCore™, High-Gloss Foil, Thermofoil or Wood-Grain Foil door styles
- Door sizes are limited to 1/16" increments

Custom Appliance Panel–Pricing Method

- General Pricing Rules:
- Using the outer most dimension of each panel, the width and height should be converted into a decimal form. Examples: 21 9/16″ = 21.5625; 58 7/16″ = 58.4375, etc.
- Calculated dimensions will be rounded using the standard rounding method (down from 4 and up from 5) to the nearest 10,000th place. Example: 8.7504069 will round to 8.7504
- List prices will be rounded up to the nearest dollar from .01 cents. Example: $179.01 will become $180
- Please use the following instructions to determine the LIST PRICE of each panel, remembering to use the rounding method mentioned above
- Start by taking the panel width and height, in decimal form, and multiply the two numbers together giving you the total square inches. Example: (21 9/16″) 21.5625 x (58 3/8″) 58.4375 = 1260.058594 sq. in., which rounds to 1260.0586 sq. in.
- Next, you need to convert sq. in. into sq. ft. by taking the sq. in. figure and dividing that number by 144. Example: 1260.0586 ÷ 144 = 8.7504069 sq. ft., which rounds to 8.7504 sq. ft.
- Next, multiply the total sq. ft. by the appropriate sq. ft. list price to get the total list price. Example 8.7504 x $141 = 1233.81, which rounds to $1234 list price
- Factory cutouts are an additional charge and ***must*** be added to the calculated price
- ***Note:*** Prices shown above are merely examples and are ***not*** actual list prices

Custom Appliance Panel–Door Onlay Panel

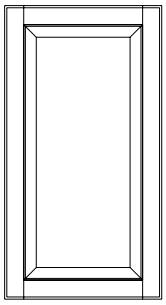

CAPDR•B
CAPDR•W

Onlay Panel	
Minimum Width	7"
Maximum Width	36"
Minimum Height	10"
Maximum Height	80"

- No center rail
- When an arched door style is selected, you ***must*** select Arched (•W) or Square (•B) to determine the door and onlay panel's top profile
- When a square door style is selected, the square profile will be supplied for all onlay panels as standard. It is recommended to use a square profile when ordering an onlay panel for a dishwasher or trash compactor application
- 7" wide door panels will be supplied as a slab design with profiled edges if frame stiles are wider than 3"
- ***Not*** available in EverCore™, High-Gloss Foil, Thermofoil or Wood-Grain Foil door styles
- Stiles and rails will be the same size and profile as the selected door style
- Cutouts are ***not*** available
- Backs are finished

Custom Appliance Panels (CAP) are located in 2020 Design under Base->Panels->Custom Appliance Panel. Once the panel is placed on the floor plan, the CAP wizard will pop-up and dimensions can be specified

Custom Appliance Panel–Door Onlay Panel with Custom Center Rail

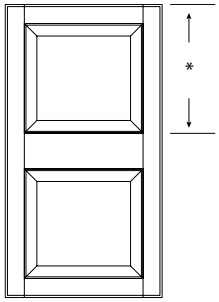

*Distance between the top of the top rail and the top of the center rail

CAPDR•B•CR
CAPDR•W•CR

Onlay Panel	
Minimum Width	7"
Maximum Width	36"
Minimum Height	24"
Maximum Height	80"

Center Rail Height	
Minimum	1 1/2"
Maximum	19"

Distance from the top of the rail to the bottom of the center rail

- The center rail position can be customized by providing the distance between the top of the top rail and the top of the center rail
- Due to varying dimensions and designs of raised center panels, recessed center panels may be supplied when the center panel width or height is less than 3 1/4"
- 7" wide door panels will be supplied as a slab design with profiled edges if frame stiles are wider than 3"
- ***Not*** available in EverCore™, High-Gloss Foil, Thermofoil or Wood-Grain Foil door styles
- ***Not*** available in mitered door styles
- Optional center rail cutout (CUTOUT) is available
- Stiles and rails will be the same size and profile as the selected door style
- Backs are finished
- ***Note:*** If center rail modifications are ***not*** necessary, use Decorative Appliance Panels

Custom Appliance Panels (CAP) are located in 2020 Design under Base->Panels->Custom Appliance Panel. Once the panel is placed on the floor plan, the CAP wizard will pop-up and dimensions can be specified

Center Rail Cutout

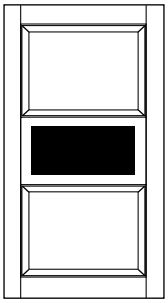

CUTOUT

- Specify cutout width and height
- The cutout position can be customized based on the distance specified from the left outside edge and from the top outside edge of the door onlay panel
- Refer to appliance manufacturer's specification to ensure ice/water dispenser trim will accommodate a 3/4" to 1" thick panel
- Cutouts will have 3/16" radius corners
- Center Rail Cutout (CUTOUT) is only available on the Custom Appliance Panel–Door Onlay Panel with Custom Center Rail (CAPDR_•CR)
- ***Not*** available in EverCore™, High-Gloss Foil or Wood-Grain Foil door styles

Custom Appliance Panel-Frame Only

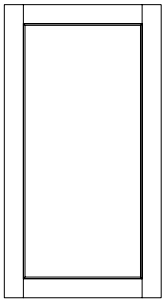

CAPFO

Frame	
Minimum Width	7"
Maximum Width	30"
Minimum Height	10"
Maximum Height	80"

Top & Bottom Rail Height	
Minimum Width	1 1/2"
Maximum Width	12"

Right & Left Stile Width	
Minimum Width	1 1/2"
Maximum Width	5"

- Available in the following door styles only if the stiles and rails are the same dimension: Mandolay Birch, Mandolay Cherry, and Mandolay Maple. Otherwise Universal Frame Only panels ***must*** be used
- Frame Only panels will ***not*** be supplied with applied molding on applicable door styles
- Outside edge profiles on stiles and rails will match the selected door style for Frame Only panels, and the inside edge profiles will have a 3/32" radius
- 7" wide door panels will be supplied as a slab design with profiled edges if frame stiles are wider than 3"
- Stile and rail sizes can be modified
- ***Not*** available in mitered or slab door styles
- ***Not*** available in EverCore™, High-Gloss Foil, Thermofoil or Wood-Grain Foil door styles
- Backs are finished

Use with wine chillers that have framed glass doors

Custom Appliance Panels (CAP) are located in 2020 Design under Base->Panels->Custom Appliance Panel. Once the panel is placed on the floor plan, the CAP wizard will pop-up and dimensions can be specified

Universal Custom Appliance Panel–Frame Only

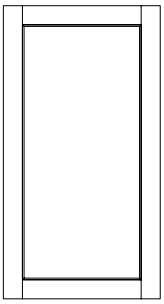

UCAPFO

- Universal Frame Only panels have a 3/32" radius on both inside and outside edges of stiles and rails
- Frame Only panels will ***not*** be supplied with applied molding on applicable door styles
- Stile and rail sizes can be modified
- 7" wide door panels will be supplied as a slab design with profiled edges if frame stiles are wider than 3"
- Backs are finished
- ***Not*** available in EverCore™, High-Gloss Foil, Thermofoil or Wood-Grain Foil door styles

Frame	
Minimum Width	7"
Maximum Width	30"
Minimum Height	10"
Maximum Height	80"

Top & Bottom Rail Height	
Minimum Width	1 1/2"
Maximum Width	12"

Right & Left Stile Width	
Minimum Width	1 1/2"
Maximum Width	5"



Use with wine chillers that have framed glass doors



Custom Appliance Panels (CAP) are located in 2020 Design under Base->Panels->Custom Appliance Panel. Once the panel is placed on the floor plan, the CAP wizard will pop-up and dimensions can be specified

Custom Appliance Panel–Drawer Onlay Panel

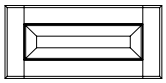

CAPDW

- Five-piece grill panels/drawer heads ordered in heights less than 6 1/8″ may be supplied as a solid slab onlay panel. Some five-piece drawer fronts may have a recessed center panel
- Drawer front configuration will follow the selected door style
- Veneer raised panel door styles will be supplied with a solid wood center panel machined to resemble the veneer center panel
- ***Not*** available in EverCore™, High-Gloss Foil, Thermofoil or Wood-Grain Foil door styles
- "Width" will be referred to as "Length" on your faxed acknowledgments for CAPDW only
- If unit is installed at an angle, fillers should be used to avoid interference with adjacent cabinet
- Stiles and rails will be the same size and profile as the selected door style
- DRPD and CLDF options are available for applicable door styles only
- Backs are finished

Onlay Panel	
Minimum Width	6"
Maximum Width	48"*, 60"**
Minimum Height	2 1/4"
Maximum Height	30", 20"

* Max width is 48" when ordered taller than 20" (Max height is 30")

** Max width is 60" when ordered 20" and shorter

Decorative Appliance Panels

Construction Options and Modifications

APDW
code

Material dimensions listed may vary slightly from actual dimensions of the product.

Specifications subject to change without notice.

Decorative Appliance Panel–General Guidelines

- Specific panel dimensions can be recorded and KraftMaid® will finish the panels to your specifications
- Check appliance manufacturer's specifications for any additional material, such as shims, spacers, etc., that may be needed before placing any order. Spacer panels are ***not*** supplied
- If a veneer center panel door style is selected, appliance panel doors will have a solid wood center panel machined to resemble the veneer center panel
- Grain orientation will match that of the selected door style
- Stiles and rails will be the same size and profile as the selected door style
- Onlay panels will react to climate conditions causing varying degrees of joint separation. This is a natural reaction in wood product and therefore is ***not*** covered under warranty
- Door sizes are limited to 1/16" increments

Decorative Appliance Panel–Pricing Method

- General Pricing Rules:
- Using the outer most dimension of each panel, the width and height should be converted into a decimal form.
  Examples: 21 9/16″ = 21.5625; 58 7/16″ = 58.4375, etc.
- Calculated dimensions will be rounded using the standard rounding method (down from 4 and up from 5) to the nearest 10,000th place.
  Example: 8.7504069 will round to 8.7504
- List prices will be rounded up to the nearest dollar from .01 cents. Example: $179.01 will become $180
- Please use the following instructions to determine the LIST PRICE of each panel, remembering to use the rounding method mentioned above
- Start by taking the panel width and height, in decimal form, and multiply the two numbers together giving you the total square inches.
  Example: (21 9/16″) 21.5625 x (58 3/8″) 58.4375 = 1260.058594 sq. in., which rounds to 1260.0586 sq. in.
- Next, you need to convert sq. in. into sq. ft. by taking the sq. in. figure and dividing that number by 144. Example: 1260.0586 ÷ 144 = 8.7504069 sq. ft., which rounds to 8.7504 sq. ft.
- Next, multiply the total sq. ft. by the appropriate sq. ft. list price to get the total list price. Example 8.7504 x $128 = 1120.05, which rounds to $1121 list price
- ***Note:*** Prices shown above are merely examples and are ***not*** actual list prices

Decorative Panel–Back Panel

APWSK

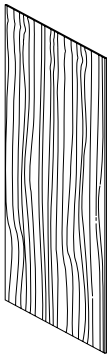

Back Panel	
Minimum Width	4 1/2"
Maximum Width	48"
Minimum Height	3/4"
Maximum Height	96"

- Approximately 3/16" thick
- Back Panels will match the wood species and the color of the selected door style and finish and can be used with or without onlay panels to decorate any appliance
- Plain sawn material supplied for Barnet Crafted door styles
- Wood veneer engineered wood
- Finished one side only
- Quartersawn door styles are quartersawn wood veneer
- Painted or Stained hardwood supplied for Wood-Grain Foil door styles
- Edges are unfinished with no edgebanding
- Painted hardwood supplied for EverCore™ and Thermofoil door styles. A matching matte panel will be supplied when ordered in High-Gloss Foil door styles

Decorative Panel–Door Onlay Panel and Hinge Doors

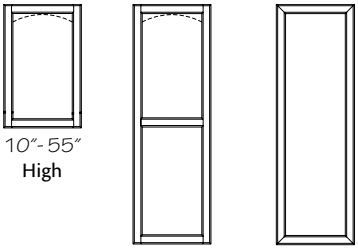

APDRL •B or W
APDRR •B or W
APDRNH •B or W

Onlay Panel	
Minimum Width	7"
Maximum Width	36"
Minimum Height	10"
Maximum Height*	80"

*Maximum height for Woodgrain Laminate mitered doors is 55 5/8"

- Doors and onlay panels ordered 10"–55" high will have a single center panel
- Doors and onlay panels ordered 54 15/16" – 80" will have a double center panel (a horizontal center rail will equally divide the onlay panel)
- Mitered door styles will have a single center panel, regardless of height
- When an arched door style is selected, you ***must*** select Arched (•W) or Square (•B) to determine the door and onlay panel's top profile
- 7" wide door panels will be supplied as a slab design with profiled edges if frame stiles are wider than 3"
- When a square door style is selected, the square profile will be supplied for all onlay panels as standard. It is recommended to use a square profile when ordering an onlay panel for a dishwasher or trash compactor application
- Multiple doors and panels of identical size may be ordered by listing the quantity needed. The quantity will default to one if a number is ***not*** given
- Veneer raised panel door styles will be supplied with a solid wood center panel machined to resemble the veneer center panel
- Due to varying dimensions and designs of raised center panels, recessed center panels may be supplied when the center panel width or height is less than 3 1/4"
- Hinging for doors:
  Doors 10" to 36" get two hinge holes
  Doors 36 1/6" to 48" get three hinge holes
  Doors 48 1/16" to 80" get four hinge holes
- Backs are finished
- ***Note:*** Check appliance manufacturer's specs for any additional material (shims, spacers, etc.) that may be needed before placing any order. Appliance model numbers are ***not*** sufficient, numeric dimensions ***must*** be used when ordering

Decorative Panel–Drawer Onlay Panel

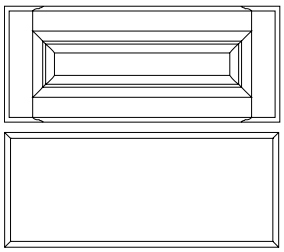

APDW

Onlay Panel	
Minimum Width	6″
Maximum Width	48″
Minimum Height	2 1/4″
Maximum Height	30″

- APDW will follow the selected door style's drawer front configuration
- Five-piece grill panels/drawer heads ordered in heights less than 6 1/8″ may be supplied as a solid slab onlay panel. Some five-piece drawer fronts may have a recessed center panel
- The Drawer Onlay Panel will be constructed like door when Wood-Grain Foils door styles are ordered
- "Width" will be referred to as "Length" on your faxed acknowledgments for APDW only
- If unit is installed at an angle, fillers should be used to avoid interference with adjacent cabinet
- Veneer raised panel door styles will be supplied with a solid wood center panel machined to resemble the veneer center panel
- Backs are finished
- ***Note:*** Check appliance manufacturer's specs for any additional material (shims, spacers, etc.) that may be needed before placing any order. Appliance model numbers are ***not*** sufficient, numeric dimensions ***must*** be used when ordering

Decorative Panel/Replacement Door and Drawer Front

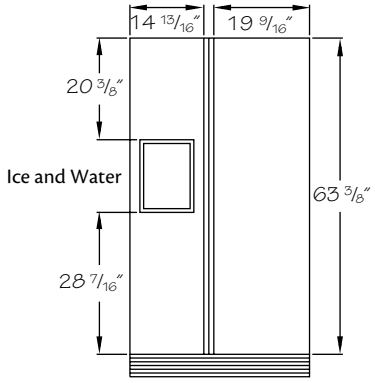

- Decorative panels can be easily created using paneling and replacement door and drawer fronts. Consult the Door and Drawer front Replacement Guide section of this book for sizes of doors and drawer fronts available
- Example: Create a decorative panel for this side by side refrigerator
- ***Note:*** In most cases, doors will be narrower than the refrigerator door and portions of the refrigerator door paneling will be exposed. Advise your customers that this "reveal" will be present and that cabinet doors will ***not*** completely overlay the refrigerator door



When applying Replacement Doors to a WSK remember to allow enough room for access to the appliance door handle

Option 1:
Order and Install:
WSK3684

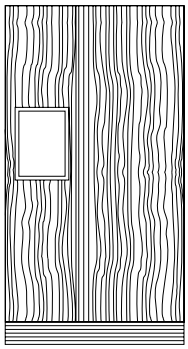

Option 2:
Order and Install:
1 - WSK3684
1 - RDB1218 (Door "A")
1 - RDB1224 (Door "B")
1 - RD1818 (Door "C")
1 - RD1815 (Door "D")
1 - RD1824 (Door "E")

Size of refrigerator may vary and door sizes may need to be changed

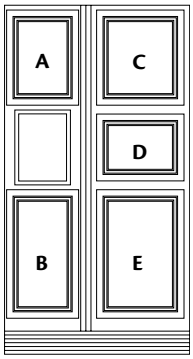

Decorative Panel–Wainscot

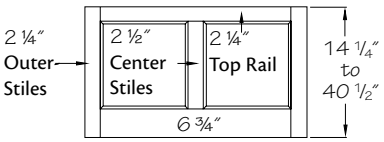

WAIN01

Standard		Shaker	
Panel Width	# Panels	Panel Width	# Panels
8"-25"	1	8"-13"	1
25 1⁄16" - 48"	2	13 1⁄16" - 20"	2
48 1⁄16" - 72"	3	20 1⁄16" - 29"	3
72 1⁄16" - 96"	4	29 1⁄16" - 35"	4
		35 1⁄16" - 48"	5
		48 1⁄16" - 60"	6
		60 1⁄16" - 72"	7
		72 1⁄16" - 84"	8
		84 1⁄16" - 96"	9

Panel	Min.	Max.
Width:	7"	96"
Height:	14¼"	40½"

- Veneer raised panel door styles will be supplied with a solid wood center panel machined to resemble the veneer center panel
- ***Not*** available in EverCore™, High-Gloss Foil or Wood-Grain Foil door styles
- ***Not*** available in mitered door styles
- ***Not*** available in slab door styles
- Shaker door styles are Abington and Amhurst
- 7" wide door panels will be supplied as a slab design with profiled edges if frame stiles are wider than 3"

Paneling

WSK	12	30
code	width	height

Construction Options and Modifications

❖ Included as standard
● Available with an upcharge
☆ Available with exceptions
(Blank) ***Not*** available

APC All Plywood Construction
CW Change Width
CH Change Height

Material dimensions listed may vary slightly from actual dimensions of the product.

Specifications subject to change without notice.

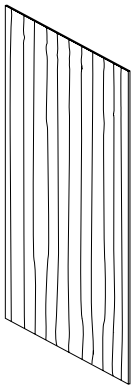

Standard Grain Panel

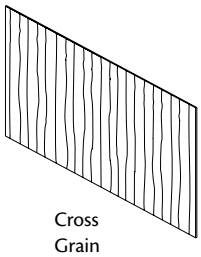

Cross Grain Panel

Wood Veneer Paneling

	Engineered Wood Construction Code	*Width x Height x Thickness*
◆	**WPL4834**	48" x 34 1/2" x 3/8"
◆	**WPL9634**	96" x 34 1/2" x 3/8"
	WPL4848	48" x 48" x 3/8"
◆❊	**WPL9648**	96" x 48" x 3/8"
❊	**WPL4896**	48" x 96" x 3/8"

	Plywood Construction Code	*Width x Height x Thickness*
	WSK1230	11 1/4" x 30" x 3/16"
	WSK2134	20 1/4" x 34 1/2" x 3/16"
	WSK2434	23 1/4" x 34 1/2" x 3/16"
	WSK2136	20 1/4" x 36" x 3/16"
	WSK1248	11 1/4" x 48" x 3/16"
◆■	**WSK4848**	48" x 48" x 3/16"
◆■❊	**WSK9648**	96" x 48" x 3/16"
	WSK1284	11 1/4" x 84" x 3/16"
	WSK2484	23 1/4" x 84" x 3/16"
	WSK3684	36" x 84" x 3/16"
	WSK1287	11 1/4" x 87" x 3/16"
	WSK2487	23 1/4" x 87" x 3/16"
	WSK2188	20 1/4" x 88 1/2" x 3/16"
	WSK1290	11 1/4" x 90" x 3/16"
	WSK2490	23 1/4" x 90" x 3/16"
	WSK1293	11 1/4" x 93" x 3/16"
	WSK2493	23 1/4" x 93 x 3/16"
	WSK1296	11 1/4" x 96" x 3/16"
	WSK2496	23 1/4" x 96" x 3/16"
	WSK3696	36" x 96" x 3/16"
	WSK12108	11 1/4" x 108" x 3/16"
	WSK12120	11 1/4"" x 120" x 3/16"
	WSK24108	23 1/4" x 108" x 3/16"
	WSK24120	23 1/4" x 120" x 3/16"
	WSK36108	36" x 108" x 3/16"
	WSK36120	36" x 120" x 3/16"

◆ Cross grain panel for peninsula application
❊ Change Width (CW) and Change Height (CH) are only available on these items
■ ***Not*** available in Morristown; Melrose and Putnam supplied plain sawn

- Painted hardwood supplied for EverCore™ and Thermofoil ☆ APC ☆ CW ☆ CH
- Painted or Stained hardwood supplied for Wood-Grain Foil door styles
- Finished one side only
- Edges are unfinished with no edgebanding

☆ APC is optional for WPL

Remember to order "Furniture Ends" (FPEB) or a Wood Skin (WSK) for wall cabinets that will be at the end of a run when applying decorative moldings. This will result in a flush application on the return.

Remember to order a 3/16" skin (WSK) for the exposed ends of 93" & 96" high cabinets to conceal the seam between the loose toe kick and the cabinet.

Remember, the grain on paneling normally runs along the length of the panel. Cross grain means grain goes with the short edge.

Beaded Paneling

APC
CW
CH

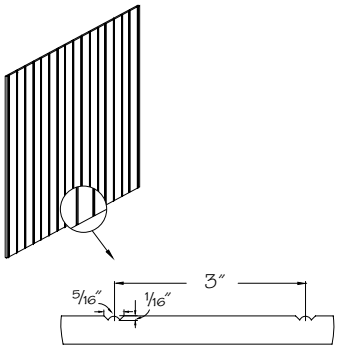

	Width x Height x Thickness
BEPL4834	48″ x 34 1/2″ x 3/8″
BEPL4848	48″ x 48″ x 3/8″
BEPL4896	48″ x 96″ x 3/8″

- Plywood construction
- Grooves are 3″ on center
- Material may need to be trimmed to ensure proper groove spacing when butting panels together
- ***Not*** available in Morristown; Melrose and Putnam supplied plain sawn
- Painted hardwood supplied for EverCore™
- Painted or Stained hardwood supplied for Wood-Grain Foil door styles

---

V-Groove Paneling

APC
CW
CH

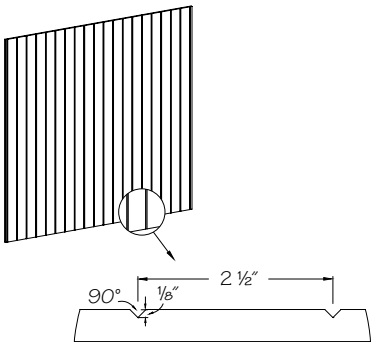

	Width x Height x Thickness
VGRPL4834	48″ x 34 1/2″ x 3/8″
VGRPL4896	48″ x 96″ x 38″

- Plywood construction
- Grooves are 2 1/2″ on center
- Material may need to be trimmed to ensure proper groove spacing when butting panels together
- Quartersawn door styles will be supplied in plain sawn wood
- Painted hardwood supplied for EverCore™
- Painted or Stained hardwood supplied for Wood-Grain Foil door styles

Specialty Panels

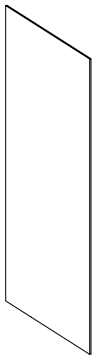

		Width x Height
	SPL4830	48" x 30"
■	**SPL9630**	96" x 30"
	SPL4836	48" x 36"
■	**SPL9636**	96" x 36"
	SPL4840	48" x 40"
■	**SPL9640**	96" x 40"
	SPL4848	48" x 48"
■	**SPL9648**	96" x 48"
	SPL2796	27" x 96"
	SPL3296	32" x 96"
	SPL4896	48" x 96"
	For 12" High Walls	
	SPL1212	11 7/8" x 12"
	SPL1512	14 7/8" x 12"
	SPL1812	17 7/8" x 12"
	SPL2112	20 7/8" x 12"
	SPL2412	23 7/8" x 12"
	For 15" High Walls	
	SPL1215	11 7/8" x 15"
	SPL1515	14 7/8" x 15"
	SPL1815	17 7/8" x 15"
	SPL2115	20 7/8" x 15"
	SPL2415	23 7/8" x 15"
	For 18" High Walls	
	SPL1218	11 7/8" x 18"
	SPL1518	14 7/8" x 18"
	SPL1818	17 7/8" x 18"
	SPL2118	20 7/8" x 18"
	SPL2418	23 7/8" x 18"
	For 21" High Walls	
	SPL1221	11 7/8" x 21"
	SPL1521	14 7/8" x 21"
	SPL1821	17 7/8" x 21"
	SPL2121	20 7/8" x 21"
	SPL2421	23 7/8" x 21"
	For 24" High Walls	
	SPL1224	11 7/8" x 23 1/2"
	SPL1524	14 7/8" x 23 1/2"
	SPL1824	17 7/8" x 23 1/2"
	SPL2124	20 7/8" x 23 1/2"
	SPL2424	23 7/8" x 23 1/2"
	For 29" High Desk Cabinets	
	SPL1225	11 7/8" x 24 1/2"
	SPL1525	14 7/8" x 24 1/2"
	SPL1825	17 7/8" x 24 1/2"
	SPL2125	20 7/8" x 24 1/2"
	SPL2425	23 7/8" x 24 1/2"
❊	**SPL2429**	23 7/8" x 29"
	For 27" High Walls	
	SPL1227	11 7/8" x 27"
	SPL1527	14 7/8" x 27"
	SPL1827	17 7/8" x 27"
	SPL2127	20 7/8" x 27"
	SPL2427	23 7/8" x 27"
	For 30" High Walls and 34 1/2" High Bases and Vanities	
	SPL1230	11 7/8" x 30"
	SPL1530	14 7/8" x 30"
	SPL1830	17 7/8" x 30"
	SPL2130	20 7/8" x 30"
	For 30" High Walls and 34 1/2" High Bases	
	SPL2430	23 7/8" x 30"
	For 33" High Walls	
	SPL1233	11 7/8" x 33"
	SPL1533	14 7/8" x 33"
	SPL1833	17 7/8" x 33"
	SPL2133	20 7/8" x 33"
	SPL2433	23 7/8" x 33"
	For 34 1/2" High Vanities	
❊	**SPL2134**	20 7/8" x 34 1/2"
❊	**SPL2434**	23 7/8" x 34 1/2"
	For 36" High Walls and 40 1/2" High Bases	
	SPL1236	11 7/8" x 36"
	SPL1536	14 7/8" x 36"
	SPL1836	17 7/8" x 36"
	SPL2136	20 7/8" x 36"
	SPL2436	23 7/8" x 36"
	For 39" High Walls	
	SPL1239	11 7/8" x 39"
	SPL1539	14 7/8" x 39"
	SPL1839	17 7/8" x 39"
	SPL2139	20 7/8" x 39"
	SPL2439	23 7/8" x 39"
	For 42" High Walls	
	SPL1242	11 7/8" x 42"
	SPL1542	14 7/8" x 42"
	SPL1842	17 7/8" x 42"
	SPL2142	20 7/8" x 42"
	SPL2442	23 7/8" x 42"
	For 45" High Wall Microwaves	
	SPL1245	11 7/8" x 45"
	SPL1845	17 7/8" x 45"
	SPL2145	20 7/8" x 45"
	SPL2445	23 7/8" x 45"
	For 48" High Walls	
	SPL1248	11 7/8" x 48"
	SPL1548	14 7/8" x 48"
	SPL1848	17 7/8" x 48"
	SPL2148	20 7/8" x 48"
	SPL2448	23 7/8" x 48"
	For 54" High Walls	
	SPL1254	11 7/8" x 54"
	SPL1554	14 7/8" x 54"
	SPL1854	17 7/8" x 54"
	SPL2154	20 7/8" x 54"
	SPL2454	23 7/8" x 54"
	For 60" High Talls	
	SPL1259	11 7/8" x 55 1/2"
	SPL1559	14 7/8" x 55 1/2"
	SPL1859	17 7/8" x 55 1/2"
	SPL2159	20 7/8" x 55 1/2"
	SPL2459	23 7/8" x 55 1/2"
	For 60" High Wall Microwaves	
	SPL1260	11 7/8" x 60"
	SPL1560	14 7/8" x 60"
	SPL1860	17 7/8" x 60"
	SPL2160	20 7/8" x 60"
❊▲	**SPL2460**	23 7/8" x 60"
	For 84" High Talls	
	SPL1280	11 7/8" x 79 1/2"
	SPL1580	14 7/8" x 79 1/2"
	SPL1880	17 7/8" x 79 1/2"
	SPL2180	20 7/8" x 79 1/2"
	SPL2480	23 7/8" x 79 1/2"
❊	**SPL2484**	23 7/8" x 84"
	For 87" High Talls	
	SPL1283	11 7/8" x 82 1/2"
	SPL1583	14 7/8" x 82 1/2"
	SPL1883	17 7/8" x 82 1/2"
	SPL2183	20 7/8" x 82 1/2"
	SPL2483	23 7/8" x 82 1/2"
❊	**SPL2487**	23 7/8" x 87"
	For 88 1/2" High Vanities	
	SPL1284	11 7/8" x 84"
	SPL1584	14 7/8" x 84"
	SPL1884	17 7/8" x 84"
	SPL2184	20 7/8" x 84"
	For 90" High Talls	
	SPL1285	11 7/8" x 85 1/2"
	SPL1585	14 7/8" x 85 1/2"
	SPL1885	17 7/8" x 85 1/2"
	SPL2185	20 7/8" x 85 1/2"
	SPL2485	23 7/8" x 85 1/2"
❊	**SPL2490**	23 7/8" x 90"
	For 93" High Talls	
	SPL1288	11 7/8" x 88 1/2"
	SPL1588	14 7/8" x 88 1/2"
	SPL1888	17 7/8" x 88 1/2"
	SPL2188	20 7/8" x 88 1/2"
	SPL2488	23 7/8" x 88 1/2"
❊	**SPL2493**	23 7/8" x 93"
	For 96" High Talls	
	SPL1291	11 7/8" x 91 1/2"
	SPL1591	14 7/8" x 91 1/2"
	SPL1891	17 7/8" x 91 1/2"
	SPL2191	20 7/8" x 91 1/2"
	SPL2491	23 7/8" x 91 1/2"
❊	**SPL2496**	23 7/8" x 96"

■ ***Not*** available in Wood-Grain Foil door styles
❊ Covers the entire end panel
▲ Covers the entire end panel of 60" High Talls

APC
CW
CH

- 3/4" thick
- Panels are made to blend with cabinet doors
- Backs of High gloss panels are matte and correspond in color to the face
- Available for High-Gloss Foil and Wood-Grain Foil door styles only
- Wood-Grain Foil door styles default to vertical design slab

Viraguard Paneling

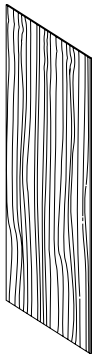

	Exterior (matching) one side	*Width x Height x Thickness*
	VSK1230	11 1/4" x 30" x 1/8"
	VSK2134	20 1/4" x 34 1/2" x 1/8"
	VSK2434	23 1/4" x 34 1/2" x 1/8"
	VSK4834	48" x 34 1/2" x 1/8"
	VSK2136	20 1/4" x 36" x 1/8"
	VSK1248	11 1/4" x 48" x 1/8"
	VSK1284	11 1/4" x 84" x 1/8"
	VSK2484	23 1/4" x 84" x 1/8"
	VSK1287	11 1/4" x 87" x 1/8"
	VSK2487	23 1/4" x 87" x 1/8"
	VSK2188	20 1/4" x 88 1/2" x 1/8"
	VSK1290	11 1/4" x 90" x 1/8"
	VSK2490	23 1/4" x 90" x 1/8"
	VSK1293	11 1/4" x 93" x 1/8"
	VSK2493	23 1/4" x 93" x 1/8"
	VSK1296	11 1/4" x 96" x 1/8"
	VSK2496	23 1/4" x 96" x 1/8"
❊	**VSK4896**	48" x 96" x 1/8"
	VPL4834 EXT1	48" x 34 1/2" x 1/2"
❊	**VPL4896 EXT1**	48" x 96" x 1/2"
	Exterior (matching) two sides	
	VPL4834 EXT2	48" x 34 1/2" x 1/2"
❊	**VPL4896 EXT2**	48" x 96" x 1/2"
	Interior (Natural Birch) one side	
	VSK4848 INT	48" x 48" x 1/8"
	VSK4896 INT	48" x 96" x 1/8"
	VPL4848 INT1	48" x 48" x 1/2"
❊	**VPL4896 INT1**	48" x 96" x 1/2"
	Interior (Natural Birch) two sides	
❊	**VPL4896 INT2**	48" x 96" x 1/2"

❊ Change Width (CW) and Change Height (CH) are only available on these items

APC
☆ CW
☆ CH

- Viraguard paneling is finished one side except as indicated
- Edges are unfinished with no edgebanding
- ***Not*** available in Morristown; Melrose and Putnam supplied plain sawn

Remember that most flat panels will ***not*** take glaze finishes like doors and molding due to little or no hang-up. When choosing a glaze finish, consider using a matching end panel on exposed ends of cabinets.

CoreGuard® Panel Backer

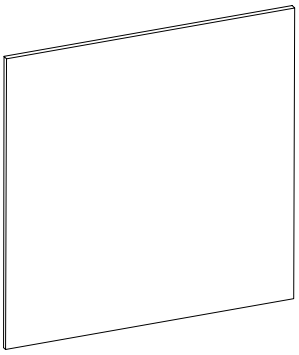

	Width x Height x Thickness
CGPB36	34 29/64" x 26 13/32" x 1/8"

APC
CW
CH

- Light beige engineered polymer
- Used to patch backs of CoreGuard® cabinets

Shelving

SK	15	24
code	width	height

Construction Options and Modifications

❖ Included as standard
● Available with an upcharge
☆ Available with exceptions
(Blank) ***Not*** available

APC All Plywood Construction
MI Matching Interior
CW Change Width
RD Reduced Depth
ID Increased Depth

Material dimensions listed may vary slightly from actual dimensions of the product.

Specifications subject to change without notice.

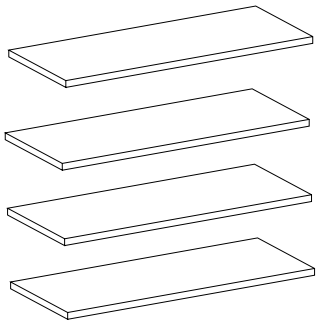

Shelf Kits

		For Operational End Option
	12" Deep	*12" Deep*
❍	**SK912**	❍ **SK912 ▪OE**
	SK1212	**SK1212 ▪OE**
	SK1512	**SK1512 ▪OE**
	SK1812	**SK1812 ▪OE**
	SK2112	**SK2112 ▪OE**
	SK2412	**SK2412 ▪OE**
	SK2712	**SK2712 ▪OE**
	SK3012	**SK3012 ▪OE**
	SK3312	**SK3312 ▪OE**
	SK3612	**SK3612 ▪OE**
	18" Deep	*18" Deep*
❍	**SK918**	❍ **SK918 ▪OE**
	SK1218	**SK1218 ▪OE**
	SK1518	**SK1518 ▪OE**
	SK1818	**SK1818 ▪OE**
	SK2118	**SK2118 ▪OE**
	SK2418	**SK2418 ▪OE**
	SK2718	**SK2718 ▪OE**
	SK3018	**SK3018 ▪OE**
	SK3318	**SK3318 ▪OE**
	SK3618	**SK3618 ▪OE**
	21" Deep	*21" Deep*
❍	**SK921**	❍ **SK921 ▪OE**
	SK1221	**SK1221 ▪OE**
	SK1521	**SK1521 ▪OE**
	SK1821	**SK1821 ▪OE**
	SK2121	**SK2121 ▪OE**
	SK2421	**SK2421 ▪OE**
	SK2721	**SK2721 ▪OE**
	SK3021	**SK3021 ▪OE**
	SK3321	**SK3321 ▪OE**
	SK3621	**SK3621 ▪OE**
	24" Deep	*24" Deep*
❍	**SK924**	❍ **SK924 ▪OE**
	SK1224	**SK1224 ▪OE**
	SK1524	**SK1524 ▪OE**
	SK1824	**SK1824 ▪OE**
	SK2124	**SK2124 ▪OE**
	SK2424	**SK2424 ▪OE**
	SK2724	**SK2724 ▪OE**
	SK3024	**SK3024 ▪OE**
	SK3324	**SK3324 ▪OE**
	SK3624	**SK3624 ▪OE**

❍ Change Width (CW) option ***not*** available

●	APC
●	MI
☆	CW
☆	RD
☆	ID

- Four 3/4" Viraguard laminated shelves
- Edgebanded one long edge
- Operational End Shelves (.OE) are edgebanded on the front, right and left edges to ensure a finished edge on shelves when the side door is open

☆ Reduced Depth (RD) and Increased Depth (ID) is ***not*** available on the Operational End Shelves (.OE)

- Increase Depth (ID) available on 24" deep shelves only, up to 27" deep
- Sixteen shelf clips included
- Recommended for tall cabinets

Glass Shelf Kits

APC	MI	☆ CW	☆ RD	ID

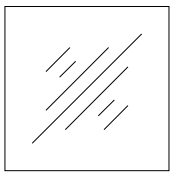

GSK

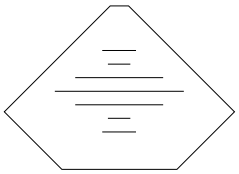

GSKWA

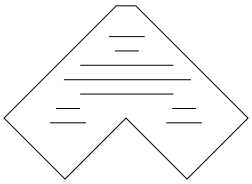

GSKWZ

❍ **GSK9**
GSK12
GSK15
GSK18
GSK21
GSK24
GSK27
◆ **GSK30**
◆ **GSK33**
◆ **GSK36**
◆ **GSK39**
◆ **GSK42**
◆ **GSK45**
◆ **GSK48**
▲ **GSK1815**
■ **GSK1218**
■ **GSK1518**
■ **GSK1818**
■ **GSK1221**
■ **GSK1521**
■ **GSK1821**
■ **GSK2124**

For Wall Angle

■❍ **GSKWA24**
■❍ **GSKWA27**

For Peninsula Wall Angle

■❍ **GSKPWA**

For Easy Reach

■❍ **GSKWZ21**
■ **GSKWZ24**

For cabinets with beaded or V-Groove back

❍❄ **VGSK9**
❄ **VGSK12**
❄ **VGSK15**
❄ **VGSK18**
❄ **VGSK21**
❄ **VGSK24**
❄ **VGSK27**
❄ **VGSK30**
❄ **VGSK33**
❄ **VGSK36**
❄ **VGSK39**
❄ **VGSK42**
❄ **VGSK45**
❄ **VGSK48**
■❄ **VGSK1218**
■❄ **VGSK1518**
■❄ **VGSK1818**
■❄ **VGSK1221**
■❄ **VGSK1521**
■❄ **VGSK1821**
■❄❍ **VGSKWA24**
■❄❍ **VGSKWA27**
■❄❍ **VGSKWZ21**
■❄ **VGSKWZ24**

For cabinets with increased depth

❍■ **GSK9 ▪ID15**
❍■ **GSK12 ▪ID15**
❍■ **GSK15 ▪ID15**
❍■ **GSK18 ▪ID15**
❍■ **GSK21 ▪ID15**
❍■ **GSK24 ▪ID15**

For cabinets with beaded or V-Groove back and increased depth

❄❍❍■ **VGSK9 ▪ID15**
❄❍■ **VGSK12 ▪ID15**
❄❍■ **VGSK15 ▪ID15**
❄❍■ **VGSK18 ▪ID15**
❄❍■ **VGSK21 ▪ID15**
❄❍■ **VGSK24 ▪ID15**

- Fits peninsula and standard wall cabinets
- Includes two 1/4" glass shelves polished edge all four sides and 12 glass shelf rests
- Glass shelves ***cannot*** be field installed in a WA 24" high; the opening is ***not*** large enough
- Tempered glass

☆ Minimum Reduced Depth (RD) is 9"

❍ Change Width (CW) option ***not*** available
◆ ***Cannot*** be used with W3030 BUTT, W3630 BUTT or any open cabinets 30" or wider. A center stile is needed for support
▲ Three shelves per kit
■ ***Not*** available in Reduced Depth (RD)
❄ ***Not*** available in Morristown

Glass Shelf Kit w/Adjustable Shelf Clips

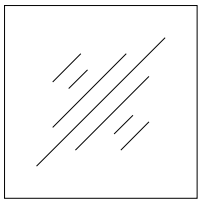

AGSK

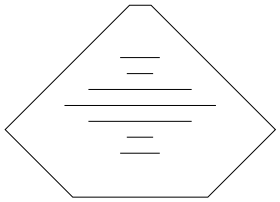

AGSKWA

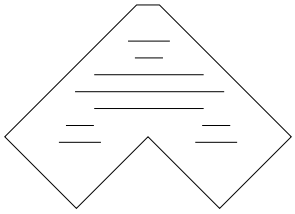

AGSKWZ

		For cabinets with beaded or V-Groove back	*For cabinets with increased depth*
	AGSK12	❄ **AVGSK12**	❍■ **AGSK12 •ID15**
	AGSK15	❄ **AVGSK15**	❍■ **AGSK15 •ID15**
	AGSK18	❄ **AVGSK18**	❍■ **AGSK18 •ID15**
	AGSK21	❄ **AVGSK21**	❍■ **AGSK21 •ID15**
	AGSK24	❄ **AVGSK24**	❍■ **AGSK24 •ID15**
	AGSK27	❄ **AVGSK27**	*For cabinets with beaded or V-Groove back and increased depth*
◆	**AGSK30**	❄◆ **AVGSK30**	❄❍■ **AVGSK12 •ID15**
◆	**AGSK33**	❄◆ **AVGSK33**	❄❍■ **AVGSK15 •ID15**
◆	**AGSK36**	❄◆ **AVGSK36**	❄❍■ **AVGSK18 •ID15**
◆	**AGSK39**	❄◆ **AVGSK39**	❄❍■ **AVGSK21 •ID15**
◆	**AGSK42**	❄◆ **AVGSK42**	❄❍■ **AVGSK24 •ID15**
◆	**AGSK45**	❄◆ **AVGSK45**	
◆	**AGSK48**	❄◆ **AVGSK48**	
▲	**AGSK1815**	❄■ **AVGSK1218**	
■	**AGSK1218**	❄■ **AVGSK1518**	
■	**AGSK1518**	❄■ **AVGSK1818**	
■	**AGSK1818**	❄■ **AVGSK1221**	
■	**AGSK1221**	❄■ **AVGSK1521**	
■	**AGSK1521**	❄■ **AVGSK1821**	
■	**AGSK1821**	❄■❍ **AVGSKWA24**	
■	**AGSK2124**	❄■❍ **AVGSKWA27**	
	For Wall Angle	❄■❍ **AVGSKWZ24**	
■❍	**AGSKWA24**		
■❍	**AGSKWA27**		
	For Peninsula Wall Angle		
■❍	**AGSKPWA**		
	For Easy Reach		
■❍	**AGSKWZ24**		

◆ ***Cannot*** be used with W3030 BUTT, W3630 BUTT or any open cabinets 30″ or wider. A center stile is needed for support

▲ Three shelves per kit

■ ***Not*** available in Reduced Depth (RD)

❍ Change Width (CW) option ***not*** available

❄ ***Not*** available in Morristown

	APC
	MI
☆	CW
☆	RD
	ID

- Fits peninsula and standard wall cabinets
- Includes two 1/4″ glass shelves polished edge all four sides and ten adjustable shelf clips
- Glass shelves ***cannot*** be field installed in a WA 24″ high; the opening is ***not*** large enough
- Tempered glass

Replacement Shelving w/Adjustable Shelf Clips

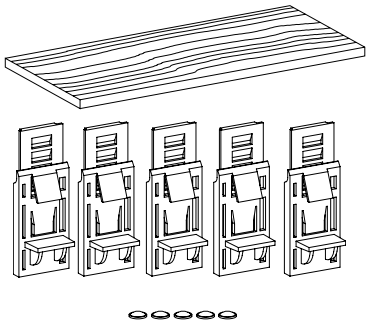

	For 12″ deep Wall	*For 12″ deep Peninsula Wall*	*For Wall Angle*
	AWS1212	**APWS1212**	▲❍**AWAS21**
	AWS1512	**APWS1512**	❍ **AWAS24**
	AWS1812	**APWS1812**	❍ **AWAS27**
	AWS2112	**APWS2112**	*For Peninsula Wall Angle*
	AWS2412	**APWS2412**	❍ **APWAS24**
	AWS2712	**APWS2712**	*For Wall Easy Reach*
	AWS3012	**APWS3012**	**AWEZRS24**
	AWS3312	**APWS3312**	❍ **AWEZRS36**
	AWS3612	**APWS3612**	*For Peninsula Wall Easy Reach*
■	**AWS3912**	■ **APWS3912**	❍ **APWEZRS24**
■	**AWS4212**	■ **APWS4212**	
■	**AWS4512**	■ **APWS4512**	
■	**AWS4812**	■ **APWS4812**	

■ ***Not*** available in Increased Depth (ID)

▲ ***Not*** available in Increased Depth (ID) or Reduced Depth (RD)

❍ Change Width (CW) option ***not*** available

Grey color coding indicates new product, size or code.

●	APC
●	MI
☆	CW
●	RD
☆	ID

- 3/4″ interior Viraguard two sides
- Edgebanded one long edge—two edges for peninsula
- Size fits interior of cabinet listed
- Includes one shelf
- Includes five adjustable shelf clips and five slip resistant pads
- Maximum Increased Depth (ID) for peninsula wall shelving is 15″

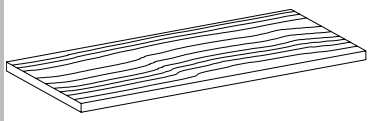

Replacement Shelving–Walls

For 12" deep Wall

❍ **WS912**
WS1212
WS1512
WS1812
WS2112
WS2412
WS2712
WS3012
WS3312
◆❍**WS3412**
WS3612
◆❍**WS3712**
◆ **WS3912**
◆ **WS4212**
◆ **WS4512**
◆ **WS4812**

For Wall Refrigerator

WRS1824
WRS2124
WRS2424
WRS2724
WRS3024
WRS3324
❍ **WRS3424**
WRS3624
❍ **WRS3724**
WRS3924

For 12" deep Peninsula Wall

❍ **PWS912**
PWS1212
PWS1512
PWS1812
PWS2112
PWS2412
PWS2712
PWS3012
PWS3312
PWS3612
◆ **PWS3912**
◆ **PWS4212**
◆ **PWS4512**
◆ **PWS4812**

For Wall Angle

▲❍**WAS21**
❍ **WAS24**
❍ **WAS27**

For Peninsula Wall Angle

❍ **PWAS24**

For Wall Corner Angle

❍ **WCAS1212**

For Wall End Corner

❍ **WECS1212**

For Wall Easy Reach

❍ **WEZRS21**
WEZRS24
❍ **WEZRS36**
❍ **WEZRS2421**

For Peninsula Wall Easy Reach

❍ **PWEZRS24**

For Wall Open Easy Reach

❍ **WOEZS924**
❍ **WOEZS1224**

For Wall Microwave

❍ **MWCS2718**
❍ **MWCS3018**
❍ **MWCS2721**
❍ **MWCS3021**

For Wall Multi-Storage Pantry

❍ **WMSPBS36**

For Stainless and Aluminum Tambour

❍ **TSSH24**
❍ **TSSH30**
❍ **TSSH36**

For Walls with Beaded or V-Groove backs

▲ **FCES30 ▪RDBO**
▲❍**WAS21 ▪RDBO**
▲ **WAS24 ▪RDBO**
▲ **WEZRS21 ▪RDBO**
▲ **WEZRS24 ▪RDBO**
▲ **WEZRS2421 ▪RDBO**
▲ **WEZRS36 ▪RDBO**
WRS2424 ▪RDBO
WRS2724 ▪RDBO
WRS3024 ▪RDBO
WRS3324 ▪RDBO
WRS3424 ▪RDBO
WRS3624 ▪RDBO
WRS3724 ▪RDBO
WRS3924 ▪RDBO
WS912 ▪RDBO
WS1212 ▪RDBO
WS1512 ▪RDBO
WS1812 ▪RDBO
WS2112 ▪RDBO
WS2412 ▪RDBO
WS2712 ▪RDBO
WS3012 ▪RDBO
WS3312 ▪RDBO
WS3412 ▪RDBO
WS3612 ▪RDBO
◆ **WS3712 ▪RDBO**
◆ **WS3912 ▪RDBO**
◆ **WS4212 ▪RDBO**
◆ **WS4512 ▪RDBO**
◆ **WS4812 ▪RDBO**

For 135° Wall Inside Angle Corner Cabinet

† **WIACS21**

For 135° Wall Outside Angle Corner Cabinet

† **WOACS6**

For Operational End Option

WAS24 ▪OE
WAS27 ▪OE
WEZRS21 ▪OE
WEZRS24 ▪OE
WEZRS2421 ▪OE
WS912 ▪OE
WS1212 ▪OE
WS1512 ▪OE
WS1515 ▪OE
WS1518 ▪OE
WS1521 ▪OE
WS1812 ▪OE
WS1815 ▪OE
WS1818 ▪OE
WS1821 ▪OE
WS2112 ▪OE
WS2412 ▪OE
WS2712 ▪OE
WS3012 ▪OE
WS3312 ▪OE
WS3412 ▪OE
WS3612 ▪OE
WS3712 ▪OE
WS3912 ▪OE
WS4212 ▪OE
WS4512 ▪OE
WS4812 ▪OE

For Integrated Wall Spice Shelf

WSIWS

●	APC
●	MI
☆	CW
☆	RD
☆	ID

- 3/4" interior Viraguard two sides; 3/4" interior Plywood two sides on Beaded or V-Groove replacement shelving
- 3/4" interior Viraguard two sides
- Edgebanded one long edge—two edges for peninsula
- Operational End Shelves (.OE) are edgebanded on the front, right and left edges to ensure a finished edge on shelves when the side door is open
- ☆ Operational End (OE) is ***not*** available with Reduced Depth (RD) options
- Size fits interior of cabinet listed
- Maximum Increased Depth (ID) for peninsula wall shelving is 15"
- Maximum Increased Depth (ID) for Wall Refrigerator shelving is 27"
- Includes one shelf
- See Hardware section of this book for shelf clips

❍ Change Width (CW) option ***not*** available
◆ ***Not*** available in Increased Depth (ID)
▲ ***Not*** available in Increased Depth (ID) or Reduced Depth (RD)
† ***Not*** available with any options

Grey color coding indicates new product, size or code.

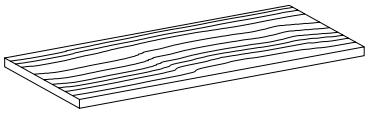

Replacement Shelving–Base

● APC
● MI
☆ CW
☆ RD
ID

For 18" deep Base

BS1218
BS1518
BS1818
BS2118
BS2418
BS2718
BS3018
BS3318
BS3618

For 21" deep Base

BS1221
BS1521
BS1821
BS2121
BS2421
BS2721
BS3021
BS3321
BS3621

For 24" deep Base

❍ **BS924**
BS1224
BS1524
BS1824
BS2124
BS2424
BS2724
BS3024
BS3324
BS3624
BS3924
BS4224
BS4524
BS4824

For 33" wide Utility Cleaning Cabinet

BS1624

For 24" deep Peninsula Base

PBS1224
PBS1524
PBS1824
PBS2124
PBS2424
PBS2724
PBS3024
PBS3324
PBS3624
PBS3924
PBS4224
PBS4524
PBS4824

For Range Base

BS2427
BS2727
BS3027
BS3327
BS3627
BS3927
BS4227
BS4527
BS4827

For Base Corner Angle

☆❍**BCAS2424**

For Peninsula Base Angle

❍ **PBAS36**

For Base End Corner

❍ **BECS2424**

For Base End Angle

❍ **BEAS1224**

For Easy Reach

❍ **BEZRS33**
❍ **BEZRS36**
❍ **EZRS3633**

For Peninsula Easy Reach

❍ **PEZRS33**
❍ **PEZRS36**

For Lazy Susan Angle

❍ **LSAS36**

For Base Multi-Storage Pantry

❍ **MSPBS36**

For Base with Beaded or V-Groove backs

BS1218 ▪RDBO
BS1221 ▪RDBO
BS1518 ▪RDBO
BS1521 ▪RDBO
BS1818 ▪RDBO
BS1821 ▪RDBO
BS1824 ▪RDBO
BS2118 ▪RDBO
BS2121 ▪RDBO
BS2124 ▪RDBO
BS2418 ▪RDBO
BS2421 ▪RDBO
BS2424 ▪RDBO
BS2718 ▪RDBO
BS2721 ▪RDBO
BS2724 ▪RDBO
BS3018 ▪RDBO
BS3021 ▪RDBO
BS3024 ▪RDBO
BS3318 ▪RDBO
BS3321 ▪RDBO
BS3324 ▪RDBO
BS3618 ▪RDBO
BS3621 ▪RDBO
BS3624 ▪RDBO

For 135° Base Inside Angle Corner Cabinet

† **BIACS21**

For 135° Base Outside Angle Corner Cabinet

† **BOACS6**

For Operational End Option

❍ **BS912 ▪OE**
❍ **BS918 ▪OE**
❍ **BS921 ▪OE**
❍ **BS924 ▪OE**
BS1212 ▪OE
BS1218 ▪OE
BS1221 ▪OE
BS1224 ▪OE
BS1512 ▪OE
BS1518 ▪OE
BS1521 ▪OE
BS1524 ▪OE
BS1812 ▪OE
BS1818 ▪OE
BS1821 ▪OE
BS1824 ▪OE
BS2112 ▪OE
BS2118 ▪OE
BS2121 ▪OE
BS2124 ▪OE
BS2412 ▪OE
BS2418 ▪OE
BS2421 ▪OE
BS2424 ▪OE
BS2712 ▪OE
BS2718 ▪OE
BS2721 ▪OE
BS2724 ▪OE
BS3012 ▪OE
BS3018 ▪OE
BS3021 ▪OE
BS3024 ▪OE
BS3312 ▪OE
BS3318 ▪OE
BS3321 ▪OE
BS3324 ▪OE
BS3612 ▪OE
BS3618 ▪OE
BS3621 ▪OE
BS3624 ▪OE
BS3912 ▪OE
BS3924 ▪OE
BS4212 ▪OE
BS4224 ▪OE
BS4512 ▪OE
BS4524 ▪OE
BS4812 ▪OE
BS4824 ▪OE

For Integrated Base Spice Shelf

■❍▲**MSPSWS**

For Base Multi-Storage Pantry Swingout

■❍▲**MSPDSS**

- 3/4" interior Viraguard two sides; 3/4" interior Plywood two sides on Beaded or V-Groove replacement shelving
- Edgebanded one long edge—two edges for peninsula
- Operational End Shelves (.OE) are edgebanded on the front, right and left edges to ensure a finished edge on shelves when the side door is open
- ☆ Operational End (OE) is ***not*** available with Reduced Depth (RD) options
- Size fits interior of cabinet listed
- Includes one shelf
- See Hardware section of this book for shelf clips

❍ Change Width (CW) option ***not*** available
☆ ***Not*** available in Reduced Depth (RD)
† ***Not*** available with any options
■ Adjustable shelf with wood edging
▲ ***Not*** available in Increased Depth (ID) or Reduced Depth (RD)

Grey color coding indicates new product, size or code.

Replacement Shelving–Vanity

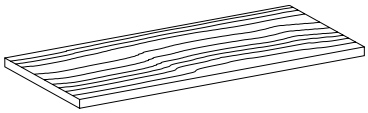

APC	MI	CW	RD	ID
●	●			

For Mirror Cabinet

MCS17

MCS24

For Tri-View

TVS24

TVS30

TVS36

TVS48

For Vanity Mirror Angle

VMAS12

For Vanity Wall

VWS12

VWS15

For Vanity Wall Boutique

◆ **WSVWB24**

For Wall Hung Vanity

WHVS1218 Offset 18" deep

WHVS1221 Offset 21" deep

◆ 3/4" interior Viraguard two sides

- 1/2" interior Viraguard two sides
- Edgebanded one long edge
- Size fits interior of cabinet listed
- Includes one shelf
- See Hardware section of this book for shelf clips

Roll-out Trays

DXROT	12	•24
code	width	depth

Construction Options and Modifications

❖ Included as standard
● Available with an upcharge
☆ Available with exceptions
(Blank) ***Not*** available

APC All Plywood Construction
MI Matching Interior
CW Change Width

Material dimensions listed may vary slightly from actual dimensions of the product.

Specifications subject to change without notice.

Deluxe Dovetailed Roll-out Tray Factory Installed

APC
MI
CW

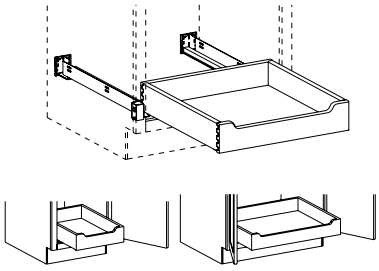

Available only in the width configurations shown

1DXROT
2DXROT
3DXROT
4DXROT
5DXROT
6DXROT

- Roll-out Trays (DXROT) are 4" deep, 5/8" solid wood dovetailed sides with 3/16" plywood bottom, notched front and full extension runners with integrated soft close feature
- 18", 21" and 24" depths only
- Single Rollout trays are mounted in the center replacing the adjustable shelf
- Tray location is adjustable
- ***Not*** available on double door cabinets with a center stile; must be ordered on cabinets with BUTT doors. ***Not*** available with Mullion Strip options (MSB, MSPBK, MSUB, MSOTB).
  Order Example:
  B30Butt-2DXROT; B36BUTT-1DXROT
- ***Not*** available with 39", 42", 45" or 48" wide cabinets
- Trays are ***not*** evenly spaced
- Order Example:
  Installed—U182484L-3DXROT
  Installed—B15L-2DXROT
  Installed—B36-2DXROT

Deluxe Dovetailed Roll-out Tray Field Installation

APC
MI
☆ CW

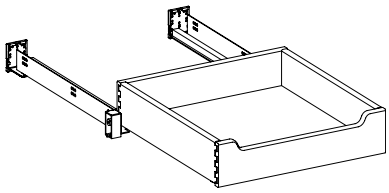

Deluxe Dovetailed Roll-out Tray Field Installation Chart

Cabinet	(Max) #DXROTs
Base	3
Base•FH	4
Base•FH•40	5
Tall	10
Desk	2
Desk•FH	3
Vanity	3
Vanity•FH	4
VLC 88 ½" H	6 (Top) 4 (Bottom)

❍ **DXROT12•24 •21 •18**
DXROT15•24 •21 •18
DXROT18•24 •21 •18
DXROT21•24 •21 •18
DXROT24•24 •21 •18
DXROT27•24 •21 •18
DXROT30•24 •21 •18
DXROT33•24 •21 •18
DXROT36•24 •21 •18

❍ Change Width (CW) option ***not*** available

- Roll-out Trays (ROT) are 4" deep, 5/8" solid wood dovetailed sides with 3/16" plywood bottom, notched front and full extension runners with integrated buffer
- 18", 21" and 24" depths only
- Tray location is adjustable
- Mounting hardware and runners included
- Order Example:
  For U182484—order DXROT18•24
  For B15L—order DXROT15•24
  For VB1518R—order DXROT15•18
  For VB15L—order DXROT15•21

Chrome Deluxe Roll-out Tray Factory Installed

APC
MI
CW

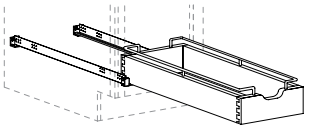

12" Wide Units

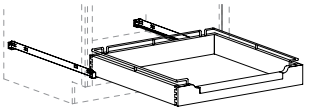

15" - 36" Wide Units

1SDXROT
2SDXROT
3SDXROT
4SDXROT
5SDXROT
6SDXROT

- Roll-out Trays (SDXROT) are 5 1/2" deep, including rails, 5/8" solid wood dovetailed sides with 1 1/2" chrome rails on sides and back, 3/16" plywood bottom, notched front with chrome pull and full extension runners with integrated soft close feature
- 18", 21" and 24" depths only
- Single Rollout trays are mounted in the center replacing the adjustable shelf
- Tray location is adjustable
- ***Not*** available on double door cabinets with a center stile; must be ordered on cabinets with BUTT doors. Not available with Mullion Strip options (MSB, MSPBK, MSUB, MSOTB)
- ***Not*** available with 39", 42", 45" or 48" wide cabinets
- Trays are ***not*** evenly spaced
- Order Example:
  Installed—U182484L-3SDXROT
  Installed—B15L-2SDXROT
  Installed—B36BUTT-2SDXROT

Chrome Deluxe Roll-out Tray Field Installation

APC
MI
CW

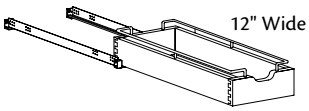

12" Wide Units

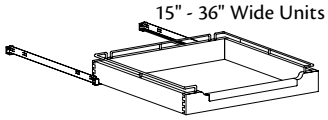

15" - 36" Wide Units

SDXROT12•24•21•18
SDXROT15•24•21•18
SDXROT18•24•21•18
SDXROT21•24•21•18
SDXROT24•24•21•18
SDXROT27•24•21•18
SDXROT30•24•21•18
SDXROT33•24•21•18
SDXROT36•24•21•18

- Roll-out Trays (ROT) are 5" deep, including rails, 5/8" solid wood dovetailed sides with 1 1/2" chrome rails on sides and back, 3/16" plywood bottom, notched front with chrome pull and full extension runners with integrated buffer
- 24" depths only
- Tray location is adjustable
- Mounting hardware and runners included
- Front chrome pullout is ***not*** included on trays for 12" wide cabinets
- Order Example:
  Installed—U182484L-3SDXROT
  Installed—B15L-2SDXROT
  Installed—B36-2SDXFWROT

Chrome Deluxe Roll-out Tray
Field Installation Chart

Cabinet	(Max) #SDXROTs
Base	3
Base•FH	4
Base•FH•40	5
Tall	10
Desk	2
Desk•FH	3
Vanity	3
Vanity•FH	4
VLC 88 ½" H	6 (Top) 4 (Bottom)

Roll-out Tray Divided Kit Field Installation

APC
MI
CW

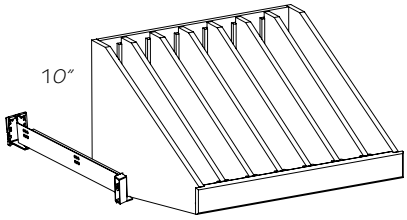

	# compartments
ROTDK12•24	3
ROTDK15•24	4
ROTDK18•24	5
ROTDK21•24	6
ROTDK24•24	7
ROTDK27•24	8
ROTDK30•24	9
ROTDK33•24	10
ROTDK36•24	11

- Tray is 2 1/4" high at front and 10" high at back
- Includes full extension soft-close runners
- 24" depth only
- Solid wood dovetail construction
- Order Example:
  For B15L—order ROTDK 15•24

Roll-out Tray Divided Kit
Field Installation Chart

Cabinet	(Max) #ROTDKs
Base	1
Base•FH	1
Base•FH•40	1
Tall	1
Desk	N/A
Desk•FH	N/A
Vanity	N/A
Vanity•FH	N/A
VLC 88 ½" H	N/A (Top) 1 (Bottom)

Decorative Doors and Inserts

Glass Door Position Availability Charts

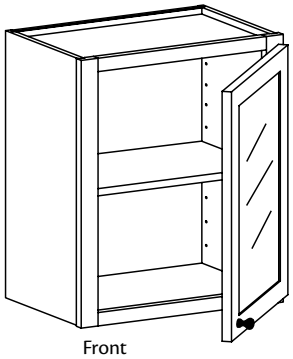

Front

Front	
Model	**For use in**
1_1	12" to 33" high Wall and Base cabinets, see insert for size exceptions
2_1	12" to 33" high Wall and Base cabinets, see insert for size exceptions
3_1	12" to 33" high Wall and Base cabinets, see insert for size exceptions
4_1	12" to 33" high Wall and Base cabinets, see insert for size exceptions
1_2	36" to 62" high Wall and Base cabinets, see insert for size exceptions
2_2	36" to 62" high Wall and Base cabinets, see insert for size exceptions
3_2	36" to 62" high Wall and Base cabinets, see insert for size exceptions
4_2	36" to 62" High Wall and Base cabinets, see insert for size exceptions

- Bistro Glass Front Example: 1BIS1

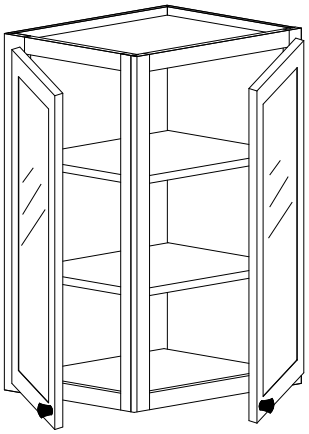

Front & End(s)

Front & End	
Model	**For use in**
2_.1E	12" to 24" wide, up to 33" high single door Wall Cabinets & Base Cabinets with Operational End
2_.2E	12" to 24" wide, 36" to 54" high single door Wall Cabinets with Operational End
2_.PREP.E	Single door Wall Cabinets & Base Cabinets with Operational End
3_.1E	24" to 36" wide, up to 33" high double door Wall cabinets & Base cabinets with Operational End
3_.2E	24" to 36" wide, 36" to 54" high double door Wall cabinets with Operational End
3_.PREP.E	Double door Wall cabinets & Base cabinets with Operational End

- Bistro Glass Front & End Example: 2BIS.1E

- Available in select Aluminum Frame Glass, Classic Glass, Etched Glass, Layered Glass and Textured Glass. See individual inserts for nomenclature.
- Glass doors ***must*** be ordered on front of cabinet to allow ordering of glass doors for Operational Ends (OE)

In 20-20 Operational End (OE) ***must*** be selected before adding glass to cabinet ends.

Order Example: W1830R- WOE.R.1- 2BIS.1E

Front & Ends Both	
Model	**For use in**
3_.1EB	12" to 24" wide, up to 33" high single door Wall Cabinets & Base Cabinets with Operational Ends Both
3_.2EB	12" to 24" wide, 36" to 54" high single door Wall Cabinets with Operational Ends Both
3_.PREP.EB	Single door Wall Cabinets & Base Cabinets with Operational Ends Both
4_.1EB	24" to 48" wide, up to 33" high double door Wall & Base Cabinets with Operational Ends Both
4_.2EB	24" to 48" wide, 36" to 54" high double door Wall Cabinets with Operational Ends Both
4_.PREP.EB	Double door Wall & Base Cabinets with Operational Ends Both

- Bistro Glass Front & Ends Both Example: 3BIS.1EB

Glass Door Position Availability Charts

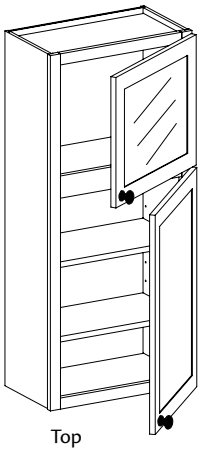

Top

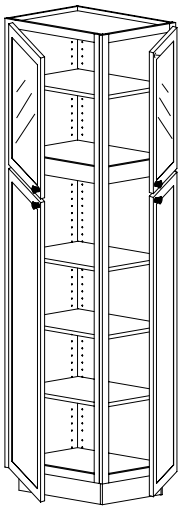

Top & End(s)

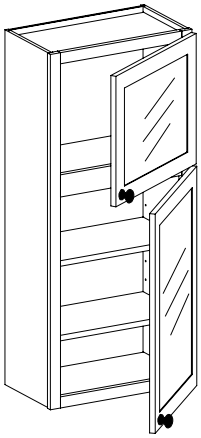

Top & Bottom

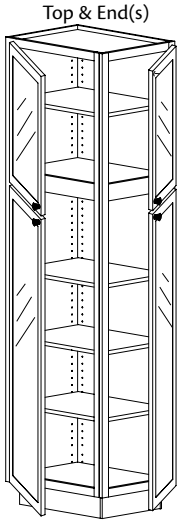

Top & Bottom & End(s)

- Available in select Aluminum Frame Glass, Classic Glass, Etched Glass, Layered Glass and Textured Glass. See individual inserts for nomenclature.
- Glass doors ***must*** be ordered on front of cabinet to allow ordering of glass doors for Operational Ends (OE)

In 20-20 Operational End (OE) ***must*** be selected before adding glass to cabinet ends.
Order Example: W1830R- WOE.R.1- 2BIS.1E

Top	
Model	**For use in**
1_.1T	12" to 24" wide, Wall Stack cabinets and 84" to 93" Tall cabinets
1_.2T	12" to 24" wide, 96" high Tall cabinets
1_PREP.T	Single door Wall Stack cabinets and Tall cabinets
2_.1T	24" to 36" wide, Wall Stack cabinets and 84" to 93" Tall cabinets
2_.2T	24" to 36" wide, 96" high Tall cabinets
2_PREP.T	Double Door Wall Stack cabinets and Tall cabinets

- Bistro Glass Top Example: 1BIS.1T

Top & End	
Model	**For use in**
2_.1T.E	12" to 24" wide, Wall Stack cabinets and 84" to 93" Tall cabinets with Operational End
2_.2T.E	12" to 24" wide, 96" high Tall cabinets with Operational End
2_PREP.T.E	Double door Wall Stack cabinets and Tall cabinets with Operational End
3_.1T.E	24" to 36" wide, Wall Stack cabinets and 84" to 93" Tall cabinets with Operational End
3_.2T.E	24" to 36" wide, 96" high Tall cabinets with Operational End
3_PREP.T.E	Single Door Wall Stack cabinets and Tall cabinets with Operational End

- Bistro Glass Top & End Example: 2BIS.1T.E

Top & Ends Both	
Model	**For use in**
3_.1T.TEB	12" to 24" wide, Wall Stack cabinets with Operational Ends Both
3_.PREP.T.TEB	Single Door Wall Stack cabinets with Operational Ends Both
4_.1T.1TEB	24" to 36" wide, Wall Stack cabinets with Operational Ends Both
4_.PREP.T.TEB	Double Door Wall Stack cabinets with Operational Ends Both

- Bistro Glass Top & Ends Both Example: 3BIS.1T.TEB

Top & Bottom	
Model	**For use in**
2_.1T.1B	12" to 24" wide, 48" & 51" Wall Stack cabinets
2_.1T.2B	12" to 24" wide, 54" high Wall Stack cabinets and 84" to 93" Tall cabinets
2_.2T.2B	12" to 24" wide, 96" high Tall cabinets
2_PREP.T.B	Double door Wall Stack cabinets and Tall cabinets
4_.1T.1B	24" to 36" wide, 48" & 51" Wall Stack cabinets
4_.1T.2B	24" to 36" wide, 54" high Wall Stack cabinets and 84" to 93" Tall cabinets
4_.2T.2B	24" to 36" wide, 96" high Tall cabinets
4_PREP.T.B	Double door Wall Stack cabinets and Tall cabinets

- Bistro Glass Top & Bottom Example: 2BIS.1T.1B

Top & Bottom & End	
Model	**For use in**
4_.1T.1B.TE.BE	12" to 24" wide, 48" & 51" high Wall Stack cabinets with Operational End
4_.1T.2B.TE.BE	12" to 24" wide, 54" high Wall Stack cabinets and 84" to 93" Tall cabinets with Operational End
4_.2T.2B.TE.BE	12" to 24" wide, 96" high Tall cabinets with Operational End
4_PREP.T.B.TE.BE	Single door Wall Stack cabinets and Tall cabinets with Operational End
6_.1T.1B.TE.BE	24" to 36" wide, 48" & 51" high Wall Stack cabinets with Operational End
6_.1T.2B.TE.BE	24" to 36" wide, 54" high Wall Stack cabinets and 84" to 93" Tall cabinets with Operational End
6_.2T.2B.TE.BE	24" to 36" wide, 96" high Tall cabinets with Operational End
6_PREP.T.B.TE.BE	Single door Wall Stack cabinets and Tall cabinets with Operational End

- Bistro Glass Top & Bottom & End Example: 4BIS.1T.1B.TE.BE

Top & Bottom & Ends Both	
Model	**For use in**
6_.1TEB.1BEB	12" to 24" wide, 48" & 51" high Wall Stack cabinets with Operational Ends Both
6_.1TEB.2BEB	12" to 24" wide, 54" high Wall Stack cabinets with Operational Ends Both
6_PREP.TEB.BEB	Double door Wall Stack cabinets with Operational Ends Both
8_.1TEB.1BEB	24" to 36" wide, 48" & 51" Wall Stack cabinets with Operational Ends Both
8_.1TEB.2BEB	24" to 36" wide, 54" high Wall Stack cabinets with Operational Ends Both
8_PREP.TEB.BEB	Double door Wall Stack cabinets with Operational Ends Both

- Bistro Glass Top & Bottom & Ends Example: 6BIS.1TEB.1BEB

Glass Door Position Availability Charts

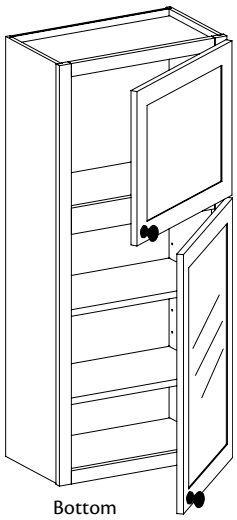

Bottom

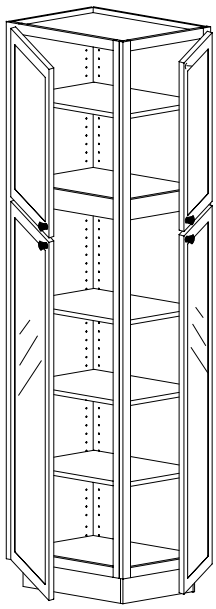

Bottom & End(s)

- Available in select Aluminum Frame Glass, Classic Glass, Etched Glass, Layered Glass and Textured Glass. See individual inserts for nomenclature.
- Check individual cabinets for availability
- Glass doors ***must*** be ordered on front of cabinet to allow ordering of glass doors for Operational Ends (OE)

In 20-20 Operational End (OE) ***must*** be selected before adding glass to cabinet ends. Order Example: W1830R- WOE.R.1- 2BIS.1E

Bottom	
Model	**For use in**
1_.1B	12" to 24" wide, 48" & 51" high Wall Stack cabinets
1_.2B	12" to 24" wide, 54" high Wall Stack cabinets and Tall cabinets
1_PREP.B	Single Door Wall Stack cabinets and Tall cabinets
2_.1B	24" to 36" wide, 48" & 51" high Wall Stack cabinets
2_.2B	24" to 36" wide, 54" high Wall Stack cabinets and Tall cabinets
2_PREP.B	Double Door Wall Stack cabinets and Tall cabinets

- Bistro Glass Bottom Example: 1BIS.1B

Bottom & End	
Model	**For use in**
2_.1B.E	12" to 24" wide, 48" & 51" high Wall Stack cabinets with Operational End
2_.2B.E	12" to 24" wide, 54" high Wall Stack cabinets and Tall cabinets with Operational End
2_PREP.B.E	Double door Wall Stack cabinets and Tall cabinets with Operational End
3_.1B.E	24" to 36" wide, 48" & 51" high Wall Stack cabinets with Operational End
3_.2B.E	24" to 36" wide, 54" high Wall Stack cabinets and Tall cabinets with Operational End
3_PREP.B.E	Single door Wall Stack cabinets and Tall cabinets with Operational End

- Bistro Glass Bottom & End Example: 2BIS.1B.E

Bottom & Ends Both	
Model	**For use in**
3_.1B.BEB	12" to 24" wide, 48" & 51" high Wall Stack cabinets with Operational Ends Both
3_.2B.BEB	12" to 24" wide, 54" high Wall Stack cabinets with Operational Ends Both
3_PREP.B.BEB	Single door Wall Stack cabinets with Operational Ends Both
4_.1B.1BEB	24" to 36" wide, 48" & 51" high Wall Stack cabinets with Operational Ends Both
4_.2B.2BEB	24" to 36" wide, 54" high Wall Stack cabinets with Operational Ends Both
4_PREP.B.BEB	Double door Wall Stack cabinets with Operational Ends Both

- Bistro Glass Bottom & Ends Example: 3BIS.1B.BEB

Aluminum Frame Glass

Aluminum frame glass doors feature clean sleek lines that complement any door style. Frames are brushed extruded aluminum. Combine a front or reverse frame and a glass style that offers the degree of content visibility you desire, from completely clear to totally obscure.

3	FR	SAT	2
quantity	frame code	glass code	height code

Aluminum frame glass is available in full overlay door styles, in sizes from 12" wide and up to 62" high.

Glass inserts are ordered individually. Place quantity before order code.

See examples for individual items.

Material dimensions listed may vary slightly from actual dimensions of the product.

See Construction Options section for specific information on each glass type.

Specifications subject to change without notice.

Fresco Brushed Aluminum

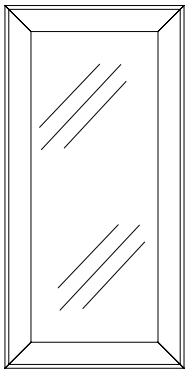

Cross-section of frame

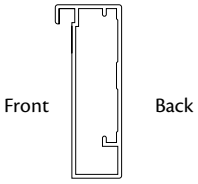

Glass Door Position Options

Bistro Glass Insert

Front
12" - 33" H
1FRBIS1
2FRBIS1
3FRBIS1
4FRBIS1
36" - 62" H
1FRBIS2
2FRBIS2
3FRBIS2
4FRBIS2

Front & End
12" - 33" H
2FRBIS ▪1E
3FRBIS ▪1E
36" - 62" H
2FRBIS ▪2E
3FRBIS ▪2E

Front & Ends Both
12" - 33" H
3FRBIS ▪1EB
4FRBIS ▪1EB
36" - 62" H
3FRBIS ▪2EB
4FRBIS ▪2EB

Top
12" - 33" H
1FRBIS ▪1T
2FRBIS ▪1T
36" - 62" H
1FRBIS ▪2T
2FRBIS ▪2T

Top & End
12" - 33" H
2FRBIS ▪1T▪E
3FRBIS ▪1T▪E
36" - 62" H
2FRBIS ▪2T▪E
3FRBIS ▪2T▪E

Top & Ends Both
12" - 33" H
3FRBIS ▪1T▪TEB
4FRBIS ▪1T▪TEB

Top & Bottom
12" - 33" H (Top & Bottom)
2FRBIS ▪1T▪1B
4FRBIS ▪1T▪1B
12" - 33" H (Top),
36" - 62" H (Bottom)
2FRBIS ▪1T▪2B
4FRBIS ▪1T▪2B
36" - 62" H (Top & Bottom)
2FRBIS ▪2T▪2B
4FRBIS ▪2T▪2B

Top & Bottom & End
12" - 33" H (Top & Bottom)
4FRBIS ▪1T▪1B▪TE▪BE
6FRBIS ▪1T▪1B▪TE▪BE
12" - 33" H (Top),
36" - 62" H (Bottom)
4FRBIS ▪1T▪2B▪TE▪BE
6FRBIS ▪1T▪2B▪TE▪BE
36" - 62" H (Top & Bottom)
4FRBIS ▪2T▪2B▪TE▪BE
6FRBIS ▪2T▪2B▪TE▪BE

Top & Bottom & Ends Both
12" - 33" H (Top & Bottom)
6FRBIS ▪1TEB▪1BEB
8FRBIS ▪1TEB▪1BEB
12" - 33" H (Top),
36" - 62" H (Bottom)
6FRBIS ▪1TEB▪2BEB
8FRBIS ▪1TEB▪2BEB

Bottom
12" - 33" H
1FRBIS ▪1B
2FRBIS ▪1B
36" - 62" H
1FRBIS ▪2B
2FRBIS ▪2B

Bottom & End
12" - 33" H
2FRBIS ▪1B▪E
3FRBIS ▪1B▪E
36" - 62" H
2FRBIS ▪2B▪E
3FRBIS ▪2B▪E

Bottom & Ends Both
12" - 33" H
3FRBIS ▪1B▪BEB
4FRBIS ▪1B▪BEB
36" - 62" H
3FRBIS ▪2B▪BEB
4FRBIS ▪2B▪BEB

Dolace Glass Insert

Front
12" - 33" H
1FRDOL1
2FRDOL1
3FRDOL1
4FRDOL1
36" - 62" H
1FRDOL2
2FRDOL2
3FRDOL2
4FRDOL2

Front & End
12" - 33" H
2FRDOL ▪1E
3FRDOL ▪1E
36" - 62" H
2FRDOL ▪2E
3FRDOL ▪2E

Front & Ends Both
12" - 33" H
3FRDOL ▪1EB
4FRDOL ▪1EB
36" - 62" H
3FRDOL ▪2EB
4FRDOL ▪2EB

Top
12" - 33" H
1FRDOL ▪1T
2FRDOL ▪1T
36" - 62" H
1FRDOL ▪2T
2FRDOL ▪2T

Top & End
12" - 33" H
2FRDOL ▪1T▪E
3FRDOL ▪1T▪E
36" - 62" H
2FRDOL ▪2T▪E
3FRDOL ▪2T▪E

Top & Ends Both
12" - 33" H
3FRDOL ▪1T▪TEB
4FRDOL ▪1T▪TEB

Top & Bottom
12" - 33" H (Top & Bottom)
2FRDOL ▪1T▪1B
4FRDOL ▪1T▪1B
12" - 33" H (Top),
36" - 62" H (Bottom)
2FRDOL ▪1T▪2B
4FRDOL ▪1T▪2B
36" - 62" H (Top & Bottom)
2FRDOL ▪2T▪2B
4FRDOL ▪2T▪2B

Top & Bottom & End
12" - 33" H (Top & Bottom)
4FRDOL ▪1T▪1B▪TE▪BE
6FRDOL ▪1T▪1B▪TE▪BE
12" - 33" H (Top),
36" - 62" H (Bottom)
4FRDOL ▪1T▪2B▪TE▪BE
6FRDOL ▪1T▪2B▪TE▪BE
36" - 62" H (Top & Bottom)
4FRDOL ▪2T▪2B▪TE▪BE
6FRDOL ▪2T▪2B▪TE▪BE

Grey color coding indicates new product, size or code.

- Brushed aluminum reverse frame door
- Glass is adhered in front of 2 1/8" frame
- 5/16" frame reveal in front
- Frame is visible behind glass that is transparent or translucent
- For more information on the glass insert choices, find the names within Classic Glass, Etched Glass, Layered Glass and Textured Glass within the Decorative Doors and Inserts section of this book. Example: Bistro Glass Inserts can be found in the Classic Glass section
- Available in full overlay door styles only
- Change Width (CW) option ***not*** available
- Change Height (CH) option ***not*** available
- Aluminum Integrated pulls (3042 or 3043) are recommended for decorative hardware. See Decorative Hardware section in this book
- See glass door position availability charts in the front of this section for more information
- Order Example: W1830R-1FRBIS1

Continued on next page

Top & Bottom & Ends Both
12" - 33" H (Top & Bottom)
6FRDOL ▪1TEB▪1BEB
8FRDOL ▪1TEB▪1BEB
12" - 33" H (Top),
36" - 62" H (Bottom)
6FRDOL ▪1TEB▪2BEB
8FRDOL ▪1TEB▪2BEB
Bottom
12" - 33" H
1FRDOL ▪1B
2FRDOL ▪1B
36" - 62" H
1FRDOL ▪2B
2FRDOL ▪2B
Bottom & End
12" - 33" H
2FRDOL ▪1B▪E
3FRDOL ▪1B▪E
36" - 62" H
2FRDOL ▪2B▪E
3FRDOL ▪2B▪E
Bottom & Ends Both
12" - 33" H
3FRDOL ▪1B▪BEB
4FRDOL ▪1B▪BEB
36" - 62" H
3FRDOL ▪2B▪BEB
4FRDOL ▪2B▪BEB
Mirage Glass Insert
Front
12" - 33" H
1FRMIR1
2FRMIR1
3FRMIR1
4FRMIR1
36" - 62" H
1FRMIR2
2FRMIR2
3FRMIR2
4FRMIR2
Front & End
12" - 33" H
2FRMIR ▪1E
3FRMIR ▪1E
36" - 62" H
2FRMIR ▪2E
3FRMIR ▪2E
Front & Ends Both
12" - 33" H
3FRMIR ▪1EB
4FRMIR ▪1EB
36" - 62" H
3FRMIR ▪2EB
4FRMIR ▪2EB
Top
12" - 33" H
1FRMIR ▪1T
2FRMIR ▪1T
36" - 62" H
1FRMIR ▪2T
2FRMIR ▪2T

Top & End
12" - 33" H
2FRMIR ▪1T▪E
3FRMIR ▪1T▪E
36" - 62" H
2FRMIR ▪2T▪E
3FRMIR ▪2T▪E
Top & Ends Both
12" - 33" H
3FRMIR ▪1T▪TEB
4FRMIR ▪1T▪TEB
Top & Bottom
12" - 33" H (Top & Bottom)
2FRMIR ▪1T▪1B
4FRMIR ▪1T▪1B
12" - 33" H (Top),
36" - 62" H Bottom)
2FRMIR ▪1T▪2B
4FRMIR ▪1T▪2B
36" - 62" H (Top & Bottom)
2FRMIR ▪2T▪2B
4FRMIR ▪2T▪2B
Top & Bottom & End
12" - 33" H (Top & Bottom)
4FRMIR ▪1T▪1B▪TE▪BE
6FRMIR ▪1T▪1B▪TE▪BE
12" - 33" H (Top),
36" - 62" H Bottom)
4FRMIR ▪1T▪2B▪TE▪BE
6FRMIR ▪1T▪2B▪TE▪BE
36" - 62" H (Top & Bottom)
4FRMIR ▪2T▪2B▪TE▪BE
6FRMIR ▪2T▪2B▪TE▪BE
Top & Bottom & Ends Both
12" - 33" H (Top & Bottom)
6FRMIR ▪1TEB▪1BEB
8FRMIR ▪1TEB▪1BEB
12" - 33" H (Top),
36" - 62" H Bottom)
6FRMIR ▪1TEB▪2BEB
8FRMIR ▪1TEB▪2BEB
Bottom
12" - 33" H
1FRMIR ▪1B
2FRMIR ▪1B
36" - 62" H
1FRMIR ▪2B
2FRMIR ▪2B
Bottom & End
12" - 33" H
2FRMIR ▪1B▪E
3FRMIR ▪1B▪E
36" - 62" H
2FRMIR ▪2B▪E
3FRMIR ▪2B▪E
Bottom & Ends Both
12" - 33" H
3FRMIR ▪1B▪BEB
4FRMIR ▪1B▪BEB
36" - 62" H
3FRMIR ▪2B▪BEB
4FRMIR ▪2B▪BEB

Satina Glass Insert
Front
12" - 33" H
1FRSAT1
2FRSAT1
3FRSAT1
4FRSAT1
36" - 62" H
1FRSAT2
2FRSAT2
3FRSAT2
4FRSAT2
Front & End
12" - 33" H
2FRSAT ▪1E
3FRSAT ▪1E
36" - 62" H
2FRSAT ▪2E
3FRSAT ▪2E
Front & Ends Both
12" - 33" H
3FRSAT ▪1EB
4FRSAT ▪1EB
36" - 62" H
3FRSAT ▪2EB
4FRSAT ▪2EB
Top
12" - 33" H
1FRSAT ▪1T
2FRSAT ▪1T
36" - 62" H
1FRSAT ▪2T
2FRSAT ▪2T
Top & End
12" - 33" H
2FRSAT ▪1T▪E
3FRSAT ▪1T▪E
36" - 62" H
2FRSAT ▪2T▪E
3FRSAT ▪2T▪E
Top & Ends Both
12" - 33" H
3FRSAT ▪1T▪TEB
4FRSAT ▪1T▪TEB
Top & Bottom
12" - 33" H (Top & Bottom)
2FRSAT ▪1T▪1B
4FRSAT ▪1T▪1B
12" - 33" H (Top),
36" - 62" H (Bottom)
2FRSAT ▪1T▪2B
4FRSAT ▪1T▪2B
36" - 62" H (Top & Bottom)
2FRSAT ▪2T▪2B
4FRSAT ▪2T▪2B
Top & Bottom & End
12" - 33" H (Top & Bottom)
4FRSAT ▪1T▪1B▪TE▪BE
6FRSAT ▪1T▪1B▪TE▪BE
12" - 33" H (Top),
36" - 62" H (Bottom)
4FRSAT ▪1T▪2B▪TE▪BE
6FRSAT ▪1T▪2B▪TE▪BE
36" - 62" H (Top & Bottom)
4FRSAT ▪2T▪2B▪TE▪BE
6FRSAT ▪2T▪2B▪TE▪BE
Top & Bottom & Ends Both
12" - 33" H (Top & Bottom)
6FRSAT ▪1TEB▪1BEB
8FRSAT ▪1TEB▪1BEB
12" - 33" H (Top),
36" - 62" H (Bottom)
6FRSAT ▪1TEB▪2BEB
8FRSAT ▪1TEB▪2BEB
Bottom
12" - 33" H
1FRSAT ▪1B
2FRSAT ▪1B
36" - 62" H
1FRSAT ▪2B
2FRSAT ▪2B
Bottom & End
12" - 33" H
2FRSAT ▪1B▪E
3FRSAT ▪1B▪E
36" - 62" H
2FRSAT ▪2B▪E
3FRSAT ▪2B▪E
Bottom & Ends Both
12" - 33" H
3FRSAT ▪1B▪BEB
4FRSAT ▪1B▪BEB
36" - 62" H
3FRSAT ▪2B▪BEB
4FRSAT ▪2B▪BEB
Silk Glass Insert
Front
12" - 33" H
1FRSLK1
2FRSLK1
3FRSLK1
4FRSLK1
36" - 42" H
1FRSLK2
2FRSLK2
3FRSLK2
4FRSLK2
Front & End
12" - 33" H
2FRSLK ▪1E
3FRSLK ▪1E
36" - 42" H
2FRSLK ▪2E
3FRSLK ▪2E
Front & Ends Both
12" - 33" H
3FRSLK ▪1EB
4FRSLK ▪1EB
36" - 42" H
3FRSLK ▪2EB
4FRSLK ▪2EB

Top
12" - 33" H
1FRSLK ▪1T
2FRSLK ▪1T
36" - 42" H
1FRSLK ▪2T
2FRSLK ▪2T
Top & End
12" - 33" H
2FRSLK ▪1T▪E
3FRSLK ▪1T▪E
36" - 42" H
2FRSLK ▪2T▪E
3FRSLK ▪2T▪E
Top & Ends Both
12" - 33" H
3FRSLK ▪1T▪TEB
4FRSLK ▪1T▪TEB
Top & Bottom
12" - 33" H (Top & Bottom)
2FRSLK ▪1T▪1B
4FRSLK ▪1T▪1B
12" - 33" H (Top),
36" - 42" H (Bottom)
2FRSLK ▪1T▪2B
4FRSLK ▪1T▪2B
Top & Bottom & End
12" - 33" H (Top & Bottom)
4FRSLK ▪1T▪1B▪TE▪BE
6FRSLK ▪1T▪1B▪TE▪BE
12" - 33" H (Top),
36" - 42" H (Bottom)
4FRSLK ▪1T▪2B▪TE▪BE
6FRSLK ▪1T▪2B▪TE▪BE
Top & Bottom & Ends Both
12" - 33" H (Top & Bottom)
6FRSLK ▪1TEB▪1BEB
8FRSLK ▪1TEB▪1BEB
12" - 33" H (Top),
36" - 42" H (Bottom)
6FRSLK ▪1TEB▪2BEB
8FRSLK ▪1TEB▪2BEB
Bottom
12" - 33" H
1FRSLK ▪1B
2FRSLK ▪1B
36" - 42" H
1FRSLK ▪2B
2FRSLK ▪2B
Bottom & End
12" - 33" H
2FRSLK ▪1B▪E
3FRSLK ▪1B▪E
36" - 42" H
2FRSLK ▪2B▪E
3FRSLK ▪2B▪E
Bottom & Ends Both
12" - 33" H
3FRSLK ▪1B▪BEB
4FRSLK ▪1B▪BEB
36" - 42" H
3FRSLK ▪2B▪BEB
4FRSLK ▪2B▪BEB

Grey color coding indicates new product, size or code.

Vetro Brushed Aluminum

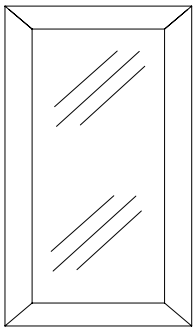

Cross-section of frame

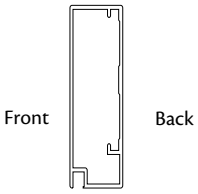

Glass Door Position Options
Bistro Glass Insert
Front
12" - 33" H
1VEBIS1
2VEBIS1
3VEBIS1
4VEBIS1
36" - 62" H
1VEBIS2
2VEBIS2
3VEBIS2
4VEBIS2
Front & End
12" - 33" H
2VEBIS ▪1E
3VEBIS ▪1E
36" - 62" H
2VEBIS ▪2E
3VEBIS ▪2E
Front & Ends Both
12" - 33" H
3VEBIS ▪1EB
4VEBIS ▪1EB
36" - 62" H
3VEBIS ▪2EB
4VEBIS ▪2EB
Top
12" - 33" H
1VEBIS ▪1T
2VEBIS ▪1T
36" - 62" H
1VEBIS ▪2T
2VEBIS ▪2T
Top & End
12" - 33" H
2VEBIS ▪1T▪E
3VEBIS ▪1T▪E
36" - 62" H
2VEBIS ▪2T▪E
3VEBIS ▪2T▪E
Top & Ends Both
12" - 33" H
3VEBIS ▪1T▪TEB
4VEBIS ▪1T▪TEB
Top & Bottom
12" - 33" H (Top & Bottom)
2VEBIS ▪1T▪1B
4VEBIS ▪1T▪1B
12" - 33" H (Top),
36" - 62" H (Bottom)
2VEBIS ▪1T▪2B
4VEBIS ▪1T▪2B
36" - 62" H (Top & Bottom)
2VEBIS ▪2T▪2B
4VEBIS ▪2T▪2B
Top & Bottom & End
12" - 33" H (Top & Bottom)
4VEBIS ▪1T▪1B▪TE▪BE
6VEBIS ▪1T▪1B▪TE▪BE
12" - 33" H (Top)
36" - 62" (Bottom)
4VEBIS ▪1T▪2B▪TE▪BE
6VEBIS ▪1T▪2B▪TE▪BE
36" - 62" H (Top & Bottom)
4VEBIS ▪2T▪2B▪TE▪BE
6VEBIS ▪2T▪2B▪TE▪BE
Top & Bottom & Ends Both
12" - 33" H (Top & Bottom)
6VEBIS ▪1TEB▪1BEB
8VEBIS ▪1TEB▪1BEB
36" - 62" H (Top & Bottom)
6VEBIS ▪1TEB▪2BEB
8VEBIS ▪1TEB▪2BEB
Bottom
12" - 33" H
1VEBIS ▪1B
2VEBIS ▪1B
36" - 62" H
1VEBIS ▪2B
2VEBIS ▪2B
Bottom & End
12" - 33" H
2VEBIS ▪1B▪E
3VEBIS ▪1B▪E
36" - 62" H
2VEBIS ▪2B▪E
3VEBIS ▪2B▪E
Bottom & Ends Both
12" - 33" H
3VEBIS ▪1B▪BEB
4VEBIS ▪1B▪BEB
36" - 62" H
3VEBIS ▪2B▪BEB
4VEBIS ▪2B▪BEB
Dolace Glass Insert
Front
12" - 33" H
1VEDOL1
2VEDOL1
3VEDOL1
4VEDOL1
36" - 62" H
1VEDOL2
2VEDOL2
3VEDOL2
4VEDOL2
Front & End
12" - 33" H
2VEDOL ▪1E
3VEDOL ▪1E
36" - 62" H
2VEDOL ▪2E
3VEDOL ▪2E
Front & Ends Both
12" - 33" H
3VEDOL ▪1EB
4VEDOL ▪1EB
36" - 62" H
3VEDOL ▪2EB
4VEDOL ▪2EB
Top
12" - 33" H
1VEDOL ▪1T
2VEDOL ▪1T
36" - 62" H
1VEDOL ▪2T
2VEDOL ▪2T
Top & End
12" - 33" H
2VEDOL ▪1T▪E
3VEDOL ▪1T▪E
36" - 62" H
2VEDOL ▪2T▪E
3VEDOL ▪2T▪E
Top & Ends Both
12" - 33" H
3VEDOL ▪1T▪TEB
4VEDOL ▪1T▪TEB
Top & Bottom
12" - 33" H (Top & Bottom)
2VEDOL ▪1T▪1B
4VEDOL ▪1T▪1B
12" - 33" H (Top),
36" - 62" H (Bottom)
2VEDOL ▪1T▪2B
4VEDOL ▪1T▪2B
36" - 62" H (Top & Bottom)
2VEDOL ▪2T▪2B
4VEDOL ▪2T▪2B
Top & Bottom & End
12" - 33" H (Top & Bottom)
4VEDOL ▪1T▪1B▪TE▪BE
6VEDOL ▪1T▪1B▪TE▪BE
12" - 33" H (Top),
36" - 62" H (Bottom)
4VEDOL ▪1T▪2B▪TE▪BE
6VEDOL ▪1T▪2B▪TE▪BE
36" - 62" H (Top & Bottom)
4VEDOL ▪2T▪2B▪TE▪BE
6VEDOL ▪2T▪2B▪TE▪BE
Top & Bottom & Ends Both
12" - 33" H (Top & Bottom)
6VEDOL ▪1TEB▪1BEB
8VEDOL ▪1TEB▪1BEB
12" - 33" H (Top),
36" - 62" H (Bottom)
6VEDOL ▪1TEB▪2BEB
8VEDOL ▪1TEB▪2BEB
Bottom
12" - 33" H
1VEDOL ▪1B
2VEDOL ▪1B
36" - 62" H
1VEDOL ▪2B
2VEDOL ▪2B
Bottom & End
12" - 33" H
2VEDOL ▪1B▪E
3VEDOL ▪1B▪E
36" - 62" H
2VEDOL ▪2B▪E
3VEDOL ▪2B▪E
Bottom & Ends Both
12" - 33" H
3VEDOL ▪1B▪BEB
4VEDOL ▪1B▪BEB
36" - 62" H
3VEDOL ▪2B▪BEB
4VEDOL ▪2B▪BEB
Mirage Glass Insert
Front
12" - 33" H
1VEMIR1
2VEMIR1
3VEMIR1
4VEMIR1
36" - 62" H
1VEMIR2
2VEMIR2
3VEMIR2
4VEMIR2
Front & End
12" - 33" H
2VEMIR ▪1E
3VEMIR ▪1E
36" - 62" H
2VEMIR ▪2E
3VEMIR ▪2E
Front & Ends Both
12" - 33" H
3VEMIR ▪1EB
4VEMIR ▪1EB
36" - 62" H
3VEMIR ▪2EB
4VEMIR ▪2EB

Grey color coding indicates new product, size or code.

- Brushed aluminum 2 1/8" frame
- Glass is adhered within the frame
- For more information on the glass insert choices, find the names within Classic Glass, Etched Glass, Layered Glass and Textured Glass within the Decorative Doors and Inserts section of this book. Example: Bistro Glass Inserts can be found in the Classic Glass section
- Available in full overlay door styles only
- Change Width (CW) option ***not*** available
- Change Height (CH) option ***not*** available
- Aluminum Integrated pulls (3042 or 3043) are recommended for decorative hardware. See Decorative Hardware section in this book
- See glass door position availability charts in the front of this section for more information
- Order Example: W3030-2VEBIS1

Continued on next page

Vetro Brushed Aluminum continued

Top
12" - 33" H
1VEMIR ▪1T
2VEMIR ▪1T
36" - 62" H
1VEMIR ▪2T
2VEMIR ▪2T
Top & End
12" - 33" H
2VEMIR ▪1T▪E
3VEMIR ▪1T▪E
36" - 62" H
2VEMIR ▪2T▪E
3VEMIR ▪2T▪E
Top & Ends Both
12" - 33" H
3VEMIR ▪1T▪TEB
4VEMIR ▪1T▪TEB
Top & Bottom
12" - 33" H (Top & Bottom)
2VEMIR ▪1T▪1B
4VEMIR ▪1T▪1B
12" - 33" H (Top),
36" - 62" H (Bottom)
2VEMIR ▪1T▪2B
4VEMIR ▪1T▪2B
36" - 62" H (Top & Bottom)
2VEMIR ▪2T▪2B
4VEMIR ▪2T▪2B
Top & Bottom & End
12" - 33" H (Top & Bottom)
4VEMIR ▪1T▪1B▪TE▪BE
6VEMIR ▪1T▪1B▪TE▪BE
12" - 33" H (Top),
36" - 62" H (Bottom)
4VEMIR ▪1T▪2B▪TE▪BE
6VEMIR ▪1T▪2B▪TE▪BE
36" - 62" H (Top & Bottom)
4VEMIR ▪2T▪2B▪TE▪BE
6VEMIR ▪2T▪2B▪TE▪BE
Top & Bottom & Ends Both
12" - 33" H (Top & Bottom)
6VEMIR ▪1TEB▪1BEB
8VEMIR ▪1TEB▪1BEB
12" - 33" H (Top),
36" - 62" H (Bottom)
6VEMIR ▪1TEB▪2BEB
8VEMIR ▪1TEB▪2BEB
Bottom
12" - 33" H
1VEMIR ▪1B
2VEMIR ▪1B
36" - 62" H
1VEMIR ▪2B
2VEMIR ▪2B
Bottom & End
12" - 33" H
2VEMIR ▪1B▪E
3VEMIR ▪1B▪E
36" - 62" H
2VEMIR ▪2B▪E
3VEMIR ▪2B▪E

Bottom & Ends Both
12" - 33" H
3VEMIR ▪1B▪BEB
4VEMIR ▪1B▪BEB
36" - 62" H
3VEMIR ▪2B▪BEB
4VEMIR ▪2B▪BEB
Satina Glass Insert
Front
12" - 33" H
1VESAT1
2VESAT1
3VESAT1
4VESAT1
36" - 62" H
1VESAT2
2VESAT2
3VESAT2
4VESAT2
Front & End
12" - 33" H
2VESAT ▪1E
3VESAT ▪1E
36" - 62" H
2VESAT ▪2E
3VESAT ▪2E
Front & Ends Both
12" - 33" H
3VESAT ▪1EB
4VESAT ▪1EB
36" - 62" H
3VESAT ▪2EB
4VESAT ▪2EB
Top
12" - 33" H
1VESAT ▪1T
2VESAT ▪1T
36" - 62" H
1VESAT ▪2T
2VESAT ▪2T
Top & End
12" - 33" H
2VESAT ▪1T▪E
3VESAT ▪1T▪E
36" - 62" H
2VESAT ▪2T▪E
3VESAT ▪2T▪E
Top & Ends Both
12" - 33" H
3VESAT ▪1T▪TEB
4VESAT ▪1T▪TEB
Top & Bottom
12" - 33" H (Top & Bottom)
2VESAT ▪1T▪1B
4VESAT ▪1T▪1B
12" - 33" H (Top),
36" - 62" H (Bottom)
2VESAT ▪1T▪2B
4VESAT ▪1T▪2B

36" - 62" H (Top & Bottom)
2VESAT ▪2T▪2B
4VESAT ▪2T▪2B
Top & Bottom & End
12" - 33" H (Top & Bottom)
4VESAT ▪1T▪1B▪TE▪BE
6VESAT ▪1T▪1B▪TE▪BE
12" - 33" H (Top),
36" - 62" H (Bottom)
4VESAT ▪1T▪2B▪TE▪BE
6VESAT ▪1T▪2B▪TE▪BE
36" - 62" H (Top & Bottom)
4VESAT ▪2T▪2B▪TE▪BE
6VESAT ▪2T▪2B▪TE▪BE
Top & Bottom & Ends Both
12" - 33" H (Top & Bottom)
6VESAT ▪1TEB▪1BEB
8VESAT ▪1TEB▪1BEB
12" - 33" H (Top),
36" - 62" H (Bottom)
6VESAT ▪1TEB▪2BEB
8VESAT ▪1TEB▪2BEB
Bottom
12" - 33" H
1VESAT ▪1B
2VESAT ▪1B
36" - 62" H
1VESAT ▪2B
2VESAT ▪2B
Bottom & End
12" - 33" H
2VESAT ▪1B▪E
3VESAT ▪1B▪E
36" - 62" H
2VESAT ▪2B▪E
3VESAT ▪2B▪E
Bottom & Ends Both
12" - 33" H
3VESAT ▪1B▪BEB
4VESAT ▪1B▪BEB
36" - 62" H
3VESAT ▪2B▪BEB
4VESAT ▪2B▪BEB
Silk Glass Insert
Front
12" - 33" H
1VESLK1
2VESLK1
3VESLK1
4VESLK1
36" - 42" H
1VESLK2
2VESLK2
3VESLK2
4VESLK2
Front & End
12" - 33" H
2VESLK ▪1E
3VESLK ▪1E
36" - 42" H
2VESLK ▪2E
3VESLK ▪2E

Front & Ends Both
12" - 33" H
3VESLK ▪1EB
4VESLK ▪1EB
36" - 42" H
3VESLK ▪2EB
4VESLK ▪2EB
Top
12" - 33" H
1VESLK ▪1T
2VESLK ▪1T
36" - 42" H
1VESLK ▪2T
2VESLK ▪2T
Top & End
12" - 33" H
2VESLK ▪1T▪E
3VESLK ▪1T▪E
36" - 42" H
2VESLK ▪2T▪E
3VESLK ▪2T▪E
Top & Ends Both
12" - 33" H
3VESLK ▪1T▪TEB
4VESLK ▪1T▪TEB
Top & Bottom
12" - 33" H (Top & Bottom)
2VESLK ▪1T▪1B
4VESLK ▪1T▪1B
12" - 33" H (Top),
36" - 42" H (Bottom)
2VESLK ▪1T▪2B
4VESLK ▪1T▪2B
Top & Bottom & End
12" - 33" H (Top & Bottom)
4VESLK ▪1T▪1B▪TE▪BE
6VESLK ▪1T▪1B▪TE▪BE
12" - 33" H (Top),
36" - 42" H (Bottom)
4VESLK ▪1T▪2B▪TE▪BE
6VESLK ▪1T▪2B▪TE▪BE
Top & Bottom & Ends Both
12" - 33" H (Top & Bottom)
6VESLK ▪1TEB▪1BEB
8VESLK ▪1TEB▪1BEB
12" - 33" H (Top),
36" - 42" H (Bottom)
6VESLK ▪1TEB▪2BEB
8VESLK ▪1TEB▪2BEB
Bottom
12" - 33" H
1VESLK ▪1B
2VESLK ▪1B
36" - 42" H
1VESLK ▪2B
2VESLK ▪2B
Bottom & End
12" - 33" H
2VESLK ▪1B▪E
3VESLK ▪1B▪E
36" - 42" H
2VESLK ▪2B▪E
3VESLK ▪2B▪E

Bottom & Ends Both
12" - 33" H
3VESLK ▪1B▪BEB
4VESLK ▪1B▪BEB
36" - 42" H
3VESLK ▪2B▪BEB
4VESLK ▪2B▪BEB

Grey color coding indicates new product, size or code.

Camed Glass

Camed glass designs use cut glass and zinc caming to create an artistic statement. The lines of the caming add stylish detail while creating visual interruptions in the glass and the objects displayed behind it.

3	YKS	2
quantity	code	height code

Camed glass is available in most door styles, in sizes from 12" wide and up to 42" high.

Glass inserts are ordered individually. Place quantity before order code. See examples for individual items.

Material dimensions listed may vary slightly from actual dimensions of the product.

See Construction Options section for specific information on each glass type.

Specifications subject to change without notice.

Chateau Insert

Lite Configurations

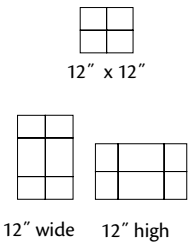

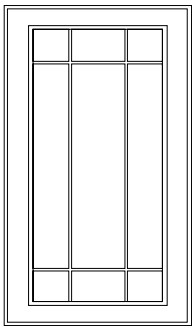

Glass Door Position Option
Front & Top
12″ - 33″ H

1CHA1
2CHA1
3CHA1
4CHA1

36″ - 42″ H

1CHA2
2CHA2
3CHA2
4CHA2

- All clear bevel glass
- Brass on Zinc Caming
- Recommended for square door styles only
- ***Not*** available in High-Gloss Foil door styles
- ***Not*** available in Wood-Grain Foil slab door styles
- Change Width (CW) option ***not*** available
- Change Height (CH) option ***not*** available
- Order Example: W3030R-2CHA1

Classic Camed Insert

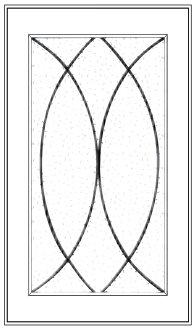

Glass Door Position Option
Front & Top
15″ - 33″ H

1CLI1
2CLI1
3CLI1
4CLI1

36″ - 42″ H

1CLI2
2CLI2
3CLI2
4CLI2

- Lightly textured satin glass
- Blackened Pewter Zinc Caming
- Only available in doors 15″ wide and wider
- Recommended for square door styles only
- Available in full overlay door styles only
- ***Not*** available in High-Gloss Foil door styles
- ***Not*** available in Wood-Grain Foil slab door styles
- Change Width (CW) option ***not*** available
- Change Height (CH) option ***not*** available
- Order Example: W3036-2CLI2

Palisades Insert

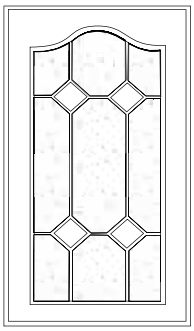



A

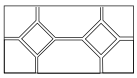

B

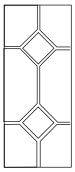

C

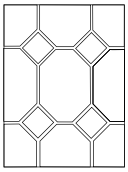

D

Glass Door Position Option
Front & Top
12" - 33" H

1PAL1
2PAL1
3PAL1
4PAL1

36" - 42" H

1PAL2
2PAL2
3PAL2
4PAL2

Cabinet Width	Cabinet Height			
	12	15	18	21 -42
12	A	A	C	C
15-36	B	B	D	D
24BUTT	A	A	C	C
27BUTT*	A	A	C	C
30BUTT	B	B	D	D
33	B	B	D	D
34BUTT		B	D	D
36BUTT	B	B	D	D
37BUTT		B	D	D
39-48	B	B	D	D
WA24/27	B	B	D	D
(W)EZR24/36				C
WCA12		B	D	D

* 2 diamonds wide on full overlay w/stiles and rails 2 ¼" or less.

- Clear seeded glass
- Clear bevel diamond(s)
- Zinc caming
- ***Not*** available in High-Gloss Foil door styles
- ***Not*** available in Wood-Grain Foil slab door styles
- Change Width (CW) option ***not*** available
- Change Height (CH) option ***not*** available
- Order Example: W1830L-1PAL1

Penrose Insert

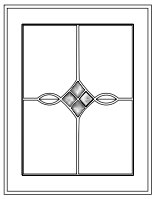

Full Overlay doors 18" or less in height with rails larger than 2 ¼" and ½" Overlay doors 18" or less in height

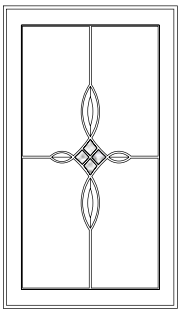

Glass Door Position Option
Front & Top
12" - 33" H

1PEN1
2PEN1
3PEN1
4PEN1

36" - 42" H

1PEN2
2PEN2
3PEN2
4PEN2

- Clear glass
- Coarse pebbled glass center diamonds
- Clear beveled ovals
- Zinc caming
- ***Not*** available in High-Gloss Foil door styles
- ***Not*** available in Wood-Grain Foil slab door styles
- 12" wide by 18" high full overlay doors are only available if they have 2 3/16" or 2 1/4" stiles and rails
- BUTT doors 24" wide ***must*** be 24" high or higher
- No side petals on 24" BUTT doors
- Change Width (CW) option ***not*** available
- Change Height (CH) option ***not*** available
- Order Example: W1830R-1PEN1

Victorian Insert

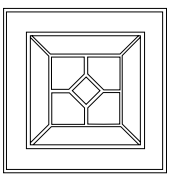

Doors 15" or less in height

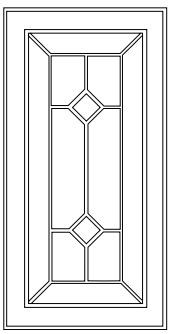

Glass Door Position Option
Front & Top
12" - 33" H

1VIC1
2VIC1
3VIC1
4VIC1

36" - 42" H

1VIC2
2VIC2
3VIC2
4VIC2

- Clear glass
- Clear bevel diamond(s)
- Zinc caming
- Recommended for square door styles only
- ***Not*** available in High-Gloss Foil door styles
- ***Not*** available in Wood-Grain Foil slab door styles
- Change Width (CW) option ***not*** available
- Change Height (CH) option ***not*** available
- Order Example: W3030R-2VIC1

Yorkshire Insert

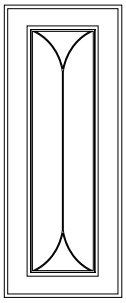

Doors 12″ wide

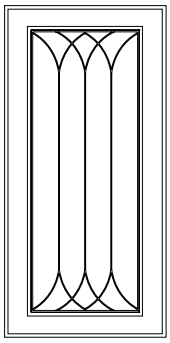

Glass Door Position Option
Front & Top
18″ - 33″ H

1YKS1
2YKS1
3YKS1
4YKS1

36″ - 42″ H

1YKS2
2YKS2
3YKS2
4YKS2

- Clear glass with Baroque style Zinc Caming
- ***Not*** available in High-Gloss Foil door styles
- ***Not*** available in Wood-Grain Foil slab door styles
- Change Width (CW) option ***not*** available
- Change Height (CH) option ***not*** available
- Order Example: W1830R-1YKS1

Classic Glass

Classic glass is simple, clean and timeless. Designs feature minimal patterns and textures. The choice of clear glass, with or without simple bevels, maximizes interior visibility.

Classic glass is available in most door styles, in sizes from 12" wide and up to 62" high.

2	BIS	2
quantity	code	height code

Glass inserts are ordered individually. Place quantity before order code. See examples for individual items.

Material dimensions listed may vary slightly from actual dimensions of the product.

See Construction Options section for specific information on each glass type.

Specifications subject to change without notice.

Bistro Insert

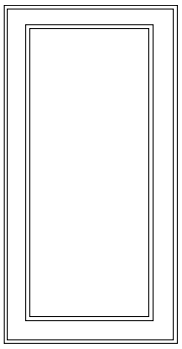

Glass Door Position Options

Front
12" - 33" H
1BIS1
2BIS1
3BIS1
4BIS1
36" - 62" H
1BIS2
2BIS2
3BIS2
4BIS2

Front & End
12" - 33" H
2BIS ▪1E
3BIS ▪1E
36" - 62" H
2BIS ▪2E
3BIS ▪2E

Front & Ends Both
12" - 33" H
3BIS ▪1EB
4BIS ▪1EB
36" - 62" H
3BIS ▪2EB
4BIS ▪2EB

Top
12" - 33" H
1BIS ▪1T
2BIS ▪1T
36" - 62" H
1BIS ▪2T
2BIS ▪2T

Top & End
12" - 33" H
2BIS ▪1T▪E
3BIS ▪1T▪E
36" - 62" H
2BIS ▪2T▪E
3BIS ▪2T▪E

Top & Ends Both
12" - 33" H
3BIS ▪1T▪TEB
4BIS ▪1T▪TEB

Top & Bottom
12" - 33" H (Top & Bottom)
2BIS ▪1T▪1B
4BIS ▪1T▪1B
12" - 33" H (Top)
36" - 62" H (Bottom)
2BIS ▪1T▪2B
4BIS ▪1T▪2B
36" - 62" H (Top & Bottom)
2BIS ▪2T▪2B
4BIS ▪2T▪2B

Top & Bottom & End
12" - 33" H (Top & Bottom)
4BIS ▪1T▪1B▪TE▪BE
6BIS ▪1T▪1B▪TE▪BE
12" - 33" H (Top),
36" - 62" H (Bottom)
4BIS ▪1T▪2B▪TE▪BE
6BIS ▪1T▪2B▪TE▪BE
36" - 62" H (Top & Bottom)
4BIS ▪2T▪2B▪TE▪BE
6BIS ▪2T▪2B▪TE▪BE

Top & Bottom & Ends Both
12" - 33" H (Top & Bottom)
6BIS ▪1TEB▪1BEB
8BIS ▪1TEB▪1BEB
12" - 33" H (Top),
36" - 62" H (Bottom)
6BIS ▪1TEB▪2BEB
8BIS ▪1TEB▪2BEB

Bottom
12" - 33" H
1BIS ▪1B
2BIS ▪1B
36" - 62" H
1BIS ▪2B
2BIS ▪2B

Bottom & End
12" - 33" H
2BIS ▪1B▪E
3BIS ▪1B▪E
36" - 62" H
2BIS ▪2B▪E
3BIS ▪2B▪E

Bottom & Ends Both
12" - 33" H
3BIS ▪1B▪BEB
4BIS ▪1B▪BEB
36" - 62" H
3BIS ▪2B▪BEB
4BIS ▪2B▪BEB

- Clear tempered glass
- ***Not*** available in High-Gloss Foil door styles
- ***Not*** available in Wood-Grain Foil slab door styles
- See glass door position availability charts in the front of this section for more information
- Order Example: W1830R-1BIS1

Grey color coding indicates new product, size or code.

Prepared for Glass

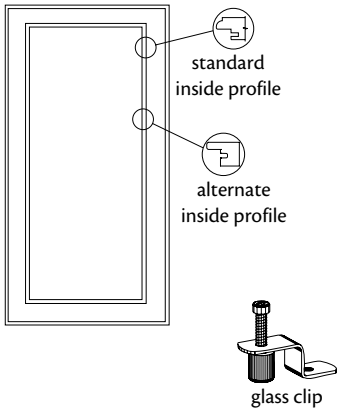

Glass Door Position Options

Front

1DRS ▪PREP

2DRS ▪PREP

3DRS ▪PREP

4DRS ▪PREP

Front & End

2DRS ▪PREP▪E

3DRS ▪PREP▪E

Front & Ends Both

3DRS ▪PREP▪EB

4DRS ▪PREP▪EB

Top

1DRS ▪PREP▪T

2DRS ▪PREP▪T

Top & End

2DRS ▪PREP▪T▪E

3DRS ▪PREP▪T▪E

Top & Ends Both

3DRS ▪PREP▪T▪TEB

4DRS ▪PREP▪T▪TEB

Top & Bottom

2DRS ▪PREP▪T▪B

4DRS ▪PREP▪T▪B

Top & Bottom & End

4DRS ▪PREP▪T▪B▪TE▪BE

6DRS ▪PREP▪T▪B▪TE▪BE

Top & Bottom & Ends Both

6DRS ▪PREP▪TEB▪BEB

8DRS ▪PREP▪TEB▪BEB

Bottom

1DRS ▪PREP▪B

2DRS ▪PREP▪B

Bottom & End

2DRS ▪PREP▪B▪E

3DRS ▪PREP▪B▪E

Bottom & Ends Both

3DRS ▪PREP▪B▪BEB

4DRS ▪PREP▪B▪BEB

- We will prepare most doors up to 42" for customer supplied glass
- Glass clips included
- 9" wide doors ***cannot*** be prep for glass or inserts
- ***Not*** available in High-Gloss Foil door styles
- ***Not*** available in Wood-Grain Foil slab door styles
- See glass door position availability charts in the front of this section for more information
- Order Example: W1830R-1DRS.PREP

Grey color coding indicates new product, size or code.

Prism Insert

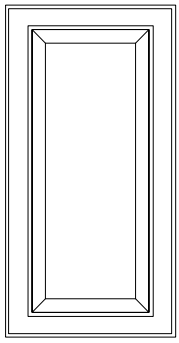

Glass Door Position Options

Front
12" - 33" H
1PRI1
2PRI1
3PRI1
4PRI1
36" - 62" H
1PRI2
2PRI2
3PRI2
4PRI2

Front & End
12" - 33" H
2PRI ▪1E
3PRI ▪1E
36" - 62" H
2PRI ▪2E
3PRI ▪2E

Front & Ends Both
12" - 33" H
3PRI ▪1EB
4PRI ▪1EB
36" - 62" H
3PRI ▪2EB
4PRI ▪2EB

Top
12" - 33" H
1PRI ▪1T
2PRI ▪1T
36" - 62" H
1PRI ▪2T
2PRI ▪2T

Top & End
12" - 33" H
2PRI ▪1T▪E
3PRI ▪1T▪E
36" - 62" H
2PRI ▪2T▪E
3PRI ▪2T▪E

Top & Ends Both
12" - 33" H
3PRI ▪1T▪TEB
4PRI ▪1T▪TEB

Top & Bottom
12" - 33" H (Top & Bottom)
2PRI ▪1T▪1B
4PRI ▪1T▪1B
12" - 33" H (Top),
36" - 62" H (Bottom)
2PRI ▪1T▪2B
4PRI ▪1T▪2B
36" - 62" H (Top & Bottom)
2PRI ▪2T▪2B
4PRI ▪2T▪2B

Top & Bottom & End
12" - 33" H (Top & Bottom)
4PRI ▪1T▪1B▪TE▪BE
6PRI ▪1T▪1B▪TE▪BE
12" - 33" H (Top),
36" - 62" H (Bottom)
4PRI ▪1T▪2B▪TE▪BE
6PRI ▪1T▪2B▪TE▪BE
36" - 62" H (Top & Bottom)
4PRI ▪2T▪2B▪TE▪BE
6PRI ▪2T▪2B▪TE▪BE

Top & Bottom & Ends Both
12" - 33" H (Top & Bottom)
6PRI ▪1TEB▪1BEB
8PRI ▪1TEB▪1BEB
12" - 33" H (Top),
36" - 62" H (Bottom)
6PRI ▪1TEB▪2BEB
8PRI ▪1TEB▪2BEB

Bottom
12" - 33" H
1PRI ▪1B
2PRI ▪1B
36" - 62" H
1PRI ▪2B
2PRI ▪2B

Bottom & End
12" - 33" H
2PRI ▪1B▪E
3PRI ▪1B▪E
36" - 62" H
2PRI ▪2B▪E
3PRI ▪2B▪E

Bottom & Ends Both
12" - 33" H
3PRI ▪1B▪BEB
4PRI ▪1B▪BEB
36" - 62" H
3PRI ▪2B▪BEB
4PRI ▪2B▪BEB

- 1 1/4" bevel
- All clear tempered beveled glass
- ***Not*** available in arch door styles
- ***Not*** available with applied molding doors
- ***Not*** available in High-Gloss Foil door styles
- ***Not*** available in Wood-Grain Foil slab door styles
- Change Width (CW) option ***not*** available
- Change Height (CH) option ***not*** available
- See glass door position availability charts in the front of this section for more information
- Order Example: W1842R-1PRI2

Grey color coding indicates new product, size or code.

Shadow Insert

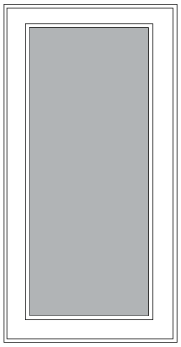

Glass Door Position Option
Front & Top
12" - 33" H
1SHW1
2SHW1
3SHW1
4SHW1
36" - 62" H
1SHW2
2SHW2
3SHW2
4SHW2

- Tinted tempered glass
- ***Not*** available in High-Gloss Foil door styles
- ***Not*** available in Wood-Grain Foil slab door styles
- Order Example: W1830R-1BIS1

Etched Glass

These glass designs offer etched linear patterns or an overall fine, sanded texture into which a pattern or shape is etched. Patterns range from mullions to simple shapes. Visibility of cabinetry interiors is possible when some areas of the glass are left unetched.

1	PRA	1
quantity	code	height code

Etched glass is available in most door styles, in sizes from 12" wide and up to 62" high.

Glass inserts are ordered individually. Place quantity before order code. See examples for individual items.

Material dimensions listed may vary slightly from actual dimensions of the product.

See Construction Options section for specific information on each glass type.

Specifications subject to change without notice.

Crossroads Insert

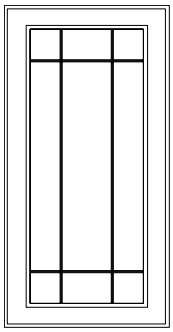

Glass Door Position Option
Front & Top
15" - 33" H

1CRO1
2CRO1
3CRO1
4CRO1

36" - 62" H

1CRO2
2CRO2
3CRO2
4CRO2

- Clear tempered glass
- 3/16" frosted etched groove
- Recommended for square door styles only
- Only available on doors 15" wide or wider
- ***Not*** available in High-Gloss Foil door styles
- Change Width (CW) option ***not*** available
- Change Height (CH) option ***not*** available
- Order Example: W1830L-1CRO1

Lisbon Insert

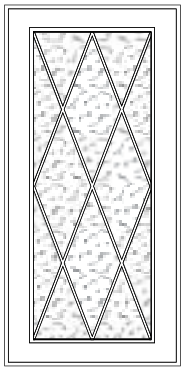

Glass Door Position Option
Front & Top
12" - 33" H

1LIS1
2LIS1
3LIS1
4LIS1

36" - 62" H

1LIS2
2LIS2
3LIS2
4LIS2

- Obscure safety glass
- 3/8" silhouette etched groove with polished center and frosted edges
- ***Not*** available in High-Gloss Foil door styles
- ***Not*** available in Wood-Grain Foil slab door styles
- Change Width (CW) option ***not*** available
- Change Height (CH) option ***not*** available

Modern Frosted Insert

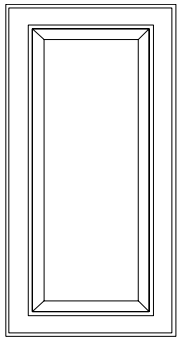

Glass Door Position Option
Front & Top
12" - 33" H

1MRF1
2MRF1
3MRF1
4MRF1

36" - 62" H

1MRF2
2MRF2
3MRF2
4MRF2

- Etched tempered glass
- 1" clear bevel
- Available in full overlay door styles only
- ***Not*** available in High-Gloss Foil door styles
- ***Not*** available in Wood-Grain Foil slab door styles
- ***Not*** available in arch door styles
- ***Not*** available with applied molding doors
- Change Width (CW) option ***not*** available
- Change Height (CH) option ***not*** available
- Order Example: W1830R-1MRF1

Prairie Insert

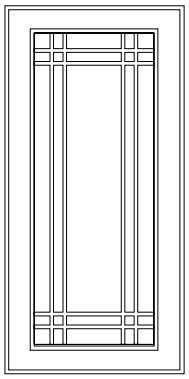

Glass Door Position Option
Front & Top
12" - 33" H

1PRA1
2PRA1
3PRA1
4PRA1

36" - 62" H

1PRA2
2PRA2
3PRA2
4PRA2

- Clear safety glass
- 3/8" etched polished V-Groove
- Recommended for square door styles only
- ***Not*** available in High-Gloss Foil door styles
- ***Not*** available in Wood-Grain Foil slab door styles
- Change Width (CW) option ***not*** available
- Change Height (CH) option ***not*** available
- Order Example: W1830R-1PRA1

Satina Insert

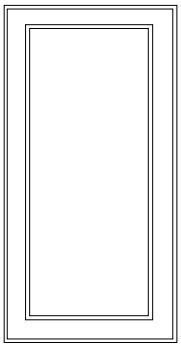

Glass Door Position Option
Front
12" - 33" H

1SAT1
2SAT1
3SAT1
4SAT1

36" - 54" H

1SAT2
2SAT2
3SAT2
4SAT2

Front & End
12" - 33" H

2SAT ▪1E
3SAT ▪1E

36" - 62" H

2SAT ▪2E
3SAT ▪2E

Front & Ends Both
12" - 33" H

3SAT ▪1EB
4SAT ▪1EB

36" - 62" H

3SAT ▪2EB
4SAT ▪2EB

Top
12" - 33" H

1SAT ▪1T
2SAT ▪1T

36" - 62" H

1SAT ▪2T
2SAT ▪2T

Top & End
12" - 33" H

2SAT ▪1T▪E
3SAT ▪1T▪E

36" - 62" H

2SAT ▪2T▪E
3SAT ▪2T▪E

Top & Ends Both
12" - 33" H

3SAT ▪1T▪TEB
4SAT ▪1T▪TEB

Top & Bottom
12" - 33" H (Top & Bottom)

2SAT ▪1T▪1B
4SAT ▪1T▪1B

12" - 33" H (Top),
36" - 62" H (Bottom)

2SAT ▪1T▪2B
4SAT ▪1T▪2B

36" - 62" H (Top & Bottom)

2SAT ▪2T▪2B
4SAT ▪2T▪2B

Top & Bottom & End
12" - 33" H (Top & Bottom)

4SAT ▪1T▪1B▪TE▪BE
6SAT ▪1T▪1B▪TE▪BE

12" - 33" H (Top),
36" - 62" H (Bottom)

4SAT ▪1T▪2B▪TE▪BE
6SAT ▪1T▪2B▪TE▪BE

36" - 62" H (Top & Bottom)

4SAT ▪2T▪2B▪TE▪BE
6SAT ▪2T▪2B▪TE▪BE

Top & Bottom & Ends Both
12" - 33" H (Top & Bottom)

6SAT ▪1TEB▪1BEB
8SAT ▪1TEB▪1BEB

12" - 33" H (Top),
36" - 62" H (Bottom)

6SAT ▪1TEB▪2BEB
8SAT ▪1TEB▪2BEB

Bottom
12" - 33" H

1SAT ▪1B
2SAT ▪1B

36" - 62" H

1SAT ▪2B
2SAT ▪2B

Bottom & End
12" - 33" H

2SAT ▪1B▪E
3SAT ▪1B▪E

36" - 62" H

2SAT ▪2B▪E
3SAT ▪2B▪E

Bottom & Ends Both
12" - 33" H

3SAT ▪1B▪BEB
4SAT ▪1B▪BEB

36" - 62" H

3SAT ▪2B▪BEB
4SAT ▪2B▪BEB

- Etched tempered glass
- ***Not*** available in High-Gloss Foil door styles
- ***Not*** available in Wood-Grain Foil slab door styles
- See glass door position availability charts in the front of this section for more information
- Order Example: PW1836R-2SAT2

Grey color coding indicates new product, size or code.

Layered Glass

Layered glass combines the durability of tempered glass with a choice of unique materials to create a special effect through color or pattern. The material is "sandwiched" between the glass layers for easy cleaning.

2	MIR	1
quantity	code	height code

Layered glass is available in most door styles, in sizes from 12" wide and up to 62" high.

Glass inserts are ordered individually. Place quantity before order code. See examples for individual items.

Material dimensions listed may vary slightly from actual dimensions of the product.

See Construction Options section for specific information on each glass type.

Specifications subject to change without notice.

Antiquity Insert

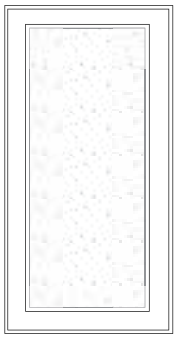

Glass Door Position Options

Front
12" - 33" H
1ATQ1
2ATQ1
3ATQ1
4ATQ1
36" - 62" H
1ATQ2
2ATQ2
3ATQ2
4ATQ2

Front & End
12" - 33" H
2ATQ ▪1E
3ATQ ▪1E
36" - 62" H
2ATQ ▪2E
3ATQ ▪2E

Front & Ends Both
12" - 33" H
3ATQ ▪1EB
4ATQ ▪1EB
36" - 62" H
3ATQ ▪2EB
4ATQ ▪2EB

Top
12" - 33" H
1ATQ ▪1T
2ATQ ▪1T
36" - 62" H
1ATQ ▪2T
2ATQ ▪2T

Top & End
12" - 33" H
2ATQ ▪1T▪E
3ATQ ▪1T▪E
36" - 62" H
2ATQ ▪2T▪E
3ATQ ▪2T▪E

Top & Ends Both
12" - 33" H
3ATQ ▪1T▪TEB
4ATQ ▪1T▪TEB

Top & Bottom
12" - 33" H (Top & Bottom)
2ATQ ▪1T▪1B
4ATQ ▪1T▪1B
12" - 33" H (Top),
36" - 62" H (Bottom)
2ATQ ▪1T▪2B
4ATQ ▪1T▪2B
36" - 62" H (Top & Bottom)
2ATQ ▪2T▪2B
4ATQ ▪2T▪2B

Top & Bottom & End
12" - 33" H (Top & Bottom)
4ATQ ▪1T▪1B▪TE▪BE
6ATQ ▪1T▪1B▪TE▪BE
12" - 33" H (Top),
36" - 62" H (Bottom)
4ATQ ▪1T▪2B▪TE▪BE
6ATQ ▪1T▪2B▪TE▪BE
36" - 62" H (Top & Bottom)
4ATQ ▪2T▪2B▪TE▪BE
6ATQ ▪2T▪2B▪TE▪BE

Top & Bottom & Ends Both
12" - 33" H (Top & Bottom)
6ATQ ▪1TEB▪1BEB
8ATQ ▪1TEB▪1BEB
12" - 33" H (Top),
36" - 62" H (Bottom)
6ATQ ▪1TEB▪2BEB
8ATQ ▪1TEB▪2BEB

Bottom
12" - 33" H
1ATQ ▪1B
2ATQ ▪1B
36" - 62" H
1ATQ ▪2B
2ATQ ▪2B

Bottom & End
12" - 33" H
2ATQ ▪1B▪E
3ATQ ▪1B▪E
36" - 62" H
2ATQ ▪2B▪E
3ATQ ▪2B▪E

Bottom & Ends Both
12" - 33" H
3ATQ ▪1B▪BEB
4ATQ ▪1B▪BEB
36" - 62" H
3ATQ ▪2B▪BEB
4ATQ ▪2B▪BEB

- Clear film laminated between pieces of obscured clear glass with droplet (seeded) impressions throughout
- ***Not*** available in High-Gloss Foil door styles
- ***Not*** available in Wood-Grain Foil slab door styles
- See glass door position availability charts in the front of this section for more information
- Order Example: W1830R-1ATQ1

Grey color coding indicates new product, size or code.

Mirage Insert

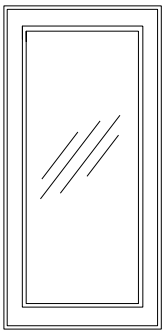

Glass Door Position Options

Front
12" - 33" H
1MIR1
2MIR1
3MIR1
4MIR1
36" - 62" H
1MIR2
2MIR2
3MIR2
4MIR2
Front & End
12" - 33" H
2MIR ▪1E
3MIR ▪1E
36" - 62" H
2MIR ▪2E
3MIR ▪2E
Front & Ends Both
12" - 33" H
3MIR ▪1EB
4MIR ▪1EB
36" - 62" H
3MIR ▪2EB
4MIR ▪2EB
Top
12" - 33" H
1MIR ▪1T
2MIR ▪1T
36" - 62" H
1MIR ▪2T
2MIR ▪2T
Top & End
12" - 33" H
2MIR ▪1T▪E
3MIR ▪1T▪E
36" - 62" H
2MIR ▪2T▪E
3MIR ▪2T▪E
Top & Ends Both
12" - 33" H
3MIR ▪1T▪TEB
4MIR ▪1T▪TEB
Top & Bottom
12" - 33" H (Top & Bottom)
2MIR ▪1T▪1B
4MIR ▪1T▪1B
12" - 33" H (Top),
36" - 62" H (Bottom)
2MIR ▪1T▪2B
4MIR ▪1T▪2B
36" - 62" H (Top & Bottom)
2MIR ▪2T▪2B
4MIR ▪2T▪2B
Top & Bottom & End
12" - 33" H (Top & Bottom)
4MIR ▪1T▪1B▪TE▪BE
6MIR ▪1T▪1B▪TE▪BE
12" - 33" H (Top),
36" - 62" H (Bottom)
4MIR ▪1T▪2B▪TE▪BE
6MIR ▪1T▪2B▪TE▪BE
36" - 62" H (Top & Bottom)
4MIR ▪2T▪2B▪TE▪BE
6MIR ▪2T▪2B▪TE▪BE
Top & Bottom & Ends Both
12" - 33" H (Top & Bottom)
6MIR ▪1TEB▪1BEB
8MIR ▪1TEB▪1BEB
12" - 33" H (Top),
36" - 62" H (Bottom)
6MIR ▪1TEB▪2BEB
8MIR ▪1TEB▪2BEB
Bottom
12" - 33" H
1MIR ▪1B
2MIR ▪1B
36" - 62" H
1MIR ▪2B
2MIR ▪2B
Bottom & End
12" - 33" H
2MIR ▪1B▪E
3MIR ▪1B▪E
36" - 62" H
2MIR ▪2B▪E
3MIR ▪2B▪E
Bottom & Ends Both
12" - 33" H
3MIR ▪1B▪BEB
4MIR ▪1B▪BEB
36" - 62" H
3MIR ▪2B▪BEB
4MIR ▪2B▪BEB

- Mirrored glass
- ***Not*** available in High-Gloss Foil door styles
- ***Not*** available in Wood-Grain Foil slab door styles
- See glass door position availability charts in the front of this section for more information
- Order Example: W1830R-1MIR1

Grey color coding indicates new product, size or code.

Silk Insert

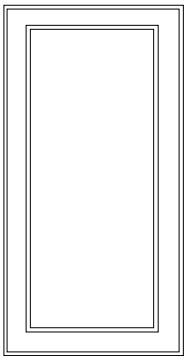

Glass Door Position Options

Front
12" - 33" H
1SLK1
2SLK1
3SLK1
4SLK1
36" - 62" H
1SLK2
2SLK2
3SLK2
4SLK2
Front & End
12" - 33" H
2SLK ▪1E
3SLK ▪1E
36" - 62" H
2SLK ▪2E
3SLK ▪2E
Front & Ends Both
12" - 33" H
3SLK ▪1EB
4SLK ▪1EB
36" - 62" H
3SLK ▪2EB
4SLK ▪2EB
Top
12" - 33" H
1SLK ▪1T
2SLK ▪1T
36" - 62" H
1SLK ▪2T
2SLK ▪2T
Top & End
12" - 33" H
2SLK ▪1T▪E
3SLK ▪1T▪E
36" - 62" H
2SLK ▪2T▪E
3SLK ▪2T▪E
Top & Ends Both
12" - 33" H
3SLK ▪1T▪TEB
4SLK ▪1T▪TEB
Top & Bottom
12" - 33" H (Top & Bottom)
2SLK ▪1T▪1B
4SLK ▪1T▪1B
12" - 33" H (Top),
36" - 62" H (Bottom)
2SLK ▪1T▪2B
4SLK ▪1T▪2B
36" - 62" H (Top & Bottom)
2SLK ▪2T▪2B
4SLK ▪2T▪2B
Top & Bottom & End
12" - 33" H (Top & Bottom)
4SLK ▪1T▪1B▪TE▪BE
6SLK ▪1T▪1B▪TE▪BE
12" - 33" H (Top),
36" - 62" H (Bottom)
4SLK ▪1T▪2B▪TE▪BE
6SLK ▪1T▪2B▪TE▪BE
36" - 62" H (Top & Bottom)
4SLK ▪2T▪2B▪TE▪BE
6SLK ▪2T▪2B▪TE▪BE
Top & Bottom & Ends Both
12" - 33" H (Top & Bottom)
6SLK ▪1TEB▪1BEB
8SLK ▪1TEB▪1BEB
12" - 33" H (Top),
36" - 62" H (Bottom)
6SLK ▪1TEB▪2BEB
8SLK ▪1TEB▪2BEB
Bottom
12" - 33" H
1SLK ▪1B
2SLK ▪1B
36" - 62" H
1SLK ▪2B
2SLK ▪2B
Bottom & End
12" - 33" H
2SLK ▪1B▪E
3SLK ▪1B▪E
36" - 62" H
2SLK ▪2B▪E
3SLK ▪2B▪E
Bottom & Ends Both
12" - 33" H
3SLK ▪1B▪BEB
4SLK ▪1B▪BEB
36" - 62" H
3SLK ▪2B▪BEB
4SLK ▪2B▪BEB

- Frosty white, semitransparent film laminated between safety glass
- ***Not*** available in High-Gloss Foil door styles
- ***Not*** available in Wood-Grain Foil slab door styles
- See glass door position availability charts in the front of this section for more information
- Order Example: W1830R-1SLK1

Grey color coding indicates new product, size or code.

Wintersday Insert

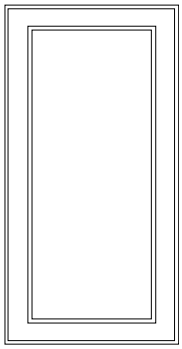

Glass Door Position Option
Front & Top
12" - 33" H

1WTD1
2WTD1
3WTD1
4WTD1

36" - 62" H

1WTD2
2WTD2
3WTD2
4WTD2

- Medium frost decorative paper laminated between pieces of clear glass
- ***Not*** available in High-Gloss Foil door styles
- ***Not*** available in Wood-Grain Foil slab door styles
- Order Example: W1830R-1WTD1

Mullion Doors

Mullion door designs combine the beauty of actual wood mullion divides and wood inserts or clear or textured tempered glass. The wood mullions coordinate with the door and frame in materials and finish. Antiquity, Bistro and Ravenna glass inserts offer a range of views into the cabinet interior, so items behind the glass can be fully exposed or slightly obscured.

2	OX	ATQ	1
quantity	door code	insert code	height code

Decorative molding will ***not*** be applied to Mullion Doors when ordered in door styles having applied molding on their inside profile.

Mullion doors are available in most door styles, in sizes from 12" wide and up to 42" high. Consult Decorative Doors and Inserts availability chart for specific detail.

Mullion Doors are ordered individually. Place quantity before order code. See examples for individual items.

Material dimensions listed may vary slightly from actual dimensions of the product.

See Construction Options section for specific information on each glass type.

Specifications subject to change without notice.

Ambry

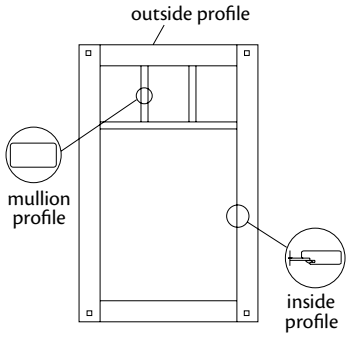

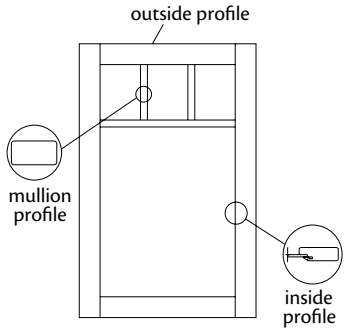

Glass Door Position Option *Front & Top* *Antiquity Glass Insert* *24" - 33" H*	*Ravenna Glass Insert* *24" - 33" H*
1AMATQ1	**1AMRAV1**
2AMATQ1	**2AMRAV1**
3AMATQ1	**3AMRAV1**
4AMATQ1	**4AMRAV1**
36" - 42" H	*36" - 42" H*
1AMATQ2	**1AMRAV2**
2AMATQ2	**2AMRAV2**
3AMATQ2	**3AMRAV2**
4AMATQ2	**4AMRAV2**
Bistro Glass Insert *24" - 33" H*	*Shadow Glass Insert* *24" - 33" H*
1AM1	**1AMSHW1**
2AM1	**2AMSHW1**
3AM1	**3AMSHW1**
4AM1	**4AMSHW1**
36" - 42" H	*36" - 42" H*
1AM2	**1AMSHW2**
2AM2	**2AMSHW2**
3AM2	**3AMSHW2**
4AM2	**4AMSHW2**

- Application of pegs will be determined by door style
- Available in full overlay door styles only
- Change Width (CW) option ***not*** available
- Change Height (CH) option ***not*** available
- ***Not*** available in Rustic door styles
- ***Not*** available in EverCore™ door styles
- ***Not*** available in High-Gloss Foil, Thermofoil or Wood-Grain Foil door styles
- Number of lites and size of lower section will vary in size; consult Ambry availability chart
- For descriptions of the glass or specialty inserts available in Mullion Doors, see Camed Glass, Classic Glass, Etched Glass, Layered Glass, Specialty Inserts and Textured Glass sections within Decorative Doors and Inserts
- Order Example: W1830L-1AMATQ1; W1842L-1AMRAV2

Cabinet Width	# lites	Nominal Height 24"	27"	30"	36"	39"	42"
12	1	●		●	●	●	●
15	2	●		●	●	●	●
18	2	●		●	●	●	●
21	3	●		●	●	●	●
24	3	●		●	●	●	●
24BUTT	1	●		●	●	●	●
27(Butt)	2	●		●	●	●	●
30	2	●	●	●	●	●	●
33	2	●		●	●	●	●
36	2	●	●	●	●	●	●
39	3	●		●			
42	3	●		●			
45	3	●		●			
48	3	●		●			
WA24	2			●	●	●	●
WA27	2			●	●	●	●

Castlegate

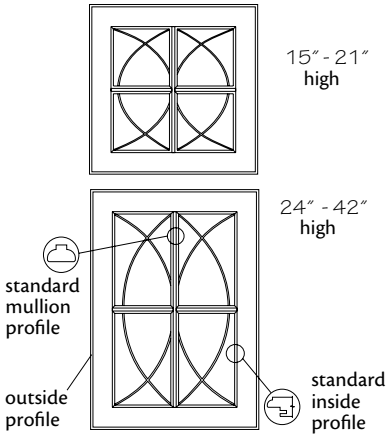

Glass Door Position Option
Front & Top
Blackened Pewter on Zinc Caming Insert
15″ - 33″ H

1CGBPB1
2CGBPB1
3CGBPB1
4CGBPB1

36″ - 42″ H

1CGBPB2
2CGBPB2
3CGBPB2
4CGBPB2

Nickel Caming Insert
15″ - 33″ H

1CGNKB1
2CGNKB1
3CGNKB1
4CGNKB1

36″ - 42″ H

1CGNKB2
2CGNKB2
3CGNKB2
4CGNKB2

- Ravenna patterned glass
- Standard Mullion Profile: The outside profile of a Mullion door will match the profile of the selected door style. The inside profile and mullion profile will always be the same, as pictured
- Only available on doors 15″ wide or wider
- Available in full overlay door styles only
- ***Not*** available in Rustic door styles
- ***Not*** available in EverCore™ door styles
- ***Not*** available in High-Gloss Foil, Thermofoil or Wood-Grain Foil door styles
- Change Width (CW) option ***not*** available
- Change Height (CH) option ***not*** available
- If ordered in an arched door style, it will be supplied square
- For descriptions of the glass or specialty inserts available in Mullion Doors, see Camed Glass, Classic Glass, Etched Glass, Layered Glass, Specialty Inserts and Textured Glass sections within Decorative Doors and Inserts
- Order Example: W1842R-1CGBPB2

Evansville

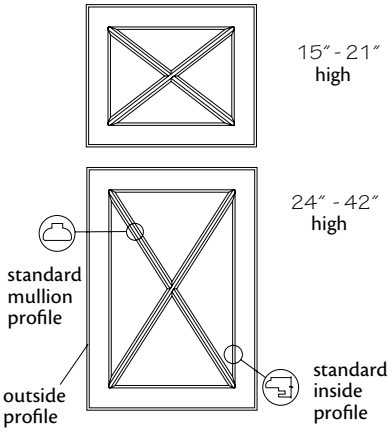

Glass Door Position Option
Front & Top
Antiquity Glass Insert
15″ - 33″ H

1EVATQ1
2EVATQ1
3EVATQ1
4EVATQ1

36″ - 42″ H

1EVATQ2
2EVATQ2
3EVATQ2
4EVATQ2

Bistro Glass Insert
15″ - 33″ H

1EV1
2EV1
3EV1
4EV1

36″ - 42″ H

1EV2
2EV2
3EV2
4EV2

Mirage Glass Insert
15″ - 33″ H

1EVMIR1
2EVMIR1
3EVMIR1
4EVMIR1

36″ - 42″ H

1EVMIR2
2EVMIR2
3EVMIR2
4EVMIR2

Ravenna Glass Insert
15″ - 33″ H

1EVRAV1
2EVRAV1
3EVRAV1
4EVRAV1

36″-42″ H

1EVRAV2
2EVRAV2
3EVRAV2
4EVRAV2

Shadow Glass Insert
15″ - 33″ H

1EVSHW1
2EVSHW1
3EVSHW1
4EVSHW1

36″ - 42″ H

1EVSHW2
2EVSHW2
3EVSHW2
4EVSHW2

- Standard Mullion Profile: The outside profile of a Mullion door will match the profile of the selected door style. The inside profile and mullion profile will always be the same, as pictured
- Only available on doors 15″ wide or wider
- Available in full overlay door styles only
- ***Not*** available in Rustic door styles
- ***Not*** available in EverCore™ door styles
- ***Not*** available in High-Gloss Foil, Thermofoil or Wood-Grain Foil door styles
- Change Width (CW) option ***not*** available
- Change Height (CH) option ***not*** available
- If ordered in an arched door style, it will be supplied square
- For descriptions of the glass or specialty inserts available in Mullion Doors, see Camed Glass, Classic Glass, Etched Glass, Layered Glass, Specialty Inserts and Textured Glass sections within Decorative Doors and Inserts
- Order Example: W1830R-1EVATQ1; W1842R-1EVRAV2

Hewitt

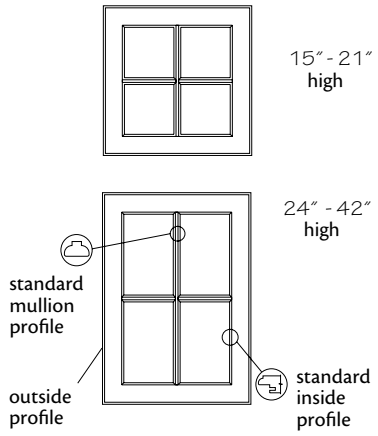

Glass Door Position Option
Front & Top
Antiquity Glass Insert
15″ - 33″ H

1HEATQ1
2HEATQ1
3HEATQ1
4HEATQ1

36″ - 42″ H

1HEATQ2
2HEATQ2
3HEATQ2
4HEATQ2

Bistro Glass Insert
15″ - 33″ H

1HE1
2HE1
3HE1
4HE1

36″ - 42″ H

1HE2
2HE2
3HE2
4HE2

Ravenna Glass Insert
15″ - 33″ H

1HERAV1
2HERAV1
3HERAV1
4HERAV1

36″ - 42″ H

1HERAV2
2HERAV2
3HERAV2
4HERAV2

Shadow Glass Insert
15″ - 33″ H

1HESHW1
2HESHW1
3HESHW1
4HESHW1

36″ - 42″

1HESHW2
2HESHW2
3HESHW2
4HESHW2

- This design will always be 2 x 2 lites
- Standard Mullion Profile: The outside profile of a Mullion door will match the profile of the selected door style. The inside profile and mullion profile will always be the same, as pictured
- Only available on doors 15" wide or wider
- Available in full overlay door styles only
- ***Not*** available in Rustic door styles
- ***Not*** available in EverCore™ door styles
- ***Not*** available in High-Gloss Foil, Thermofoil or Wood-Grain Foil door styles
- Change Width (CW) option ***not*** available
- Change Height (CH) option ***not*** available
- If ordered in an arched door style, it will be supplied square
- For descriptions of the glass or specialty inserts available in Mullion Doors, see Camed Glass, Classic Glass, Etched Glass, Layered Glass, Specialty Inserts and Textured Glass sections within Decorative Doors and Inserts
- Order Example: W1830R-1HEATQ1; W1842R-1HERAV2

Palladia

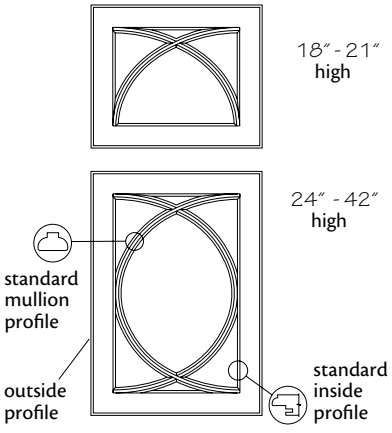

Glass Door Position Option
Front & Top
Antiquity Glass Insert
18″ - 33″ H

1PAATQ1
2PAATQ1
3PAATQ1
4PAATQ1

36″ - 42″ H

1PAATQ2
2PAATQ2
3PAATQ2
4PAATQ2

Bistro Glass Insert
18″ - 33″ H

1PA1
2PA1
3PA1
4PA1

36″ - 42″ H

1PA2
2PA2
3PA2
4PA2

Mirage Glass Insert
18″ - 33″ H

1PAMIR1
2PAMIR1
3PAMIR1
4PAMIR1

36″ - 42″ H

1PAMIR2
2PAMIR2
3PAMIR2
4PAMIR2

Ravenna Glass Insert
18″ - 33″ H

1PARAV1
2PARAV1
3PARAV1
4PARAV1

36″ - 42″ H

1PARAV2
2PARAV2
3PARAV2
4PARAV2

Shadow Glass Insert
18″ - 33″ H

1PASHW1
2PASHW1
3PASHW1
4PASHW1

36″ - 42″ H

1PASHW2
2PASHW2
3PASHW2
4PASHW2

- Standard Mullion Profile: The outside profile of a Mullion door will match the profile of the selected door style. The inside profile and mullion profile will always be the same, as pictured
- Only available on doors 18″ wide (nominal) and wider with stiles and rails 2 3/8″ or less
- Available in full overlay door styles only
- Available in Cherry and Maple door styles only
- ***Not*** available in Rustic door styles
- Change Width (CW) option ***not*** available
- Change Height (CH) option ***not*** available
- If ordered in an arched door style, it will be supplied square
- For descriptions of the glass or specialty inserts available in Mullion Doors, see Camed Glass, Classic Glass, Etched Glass, Layered Glass, Specialty Inserts and Textured Glass sections within Decorative Doors and Inserts
- Order Example: W1830R-1PAATQ1; W1842R-1PARAV2

Raleigh

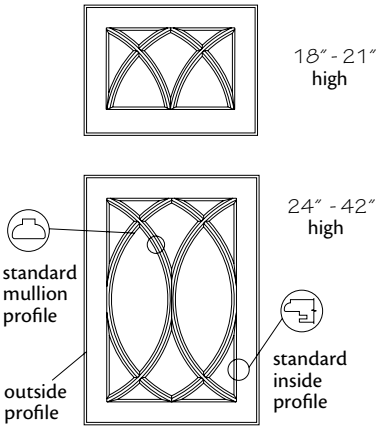

Glass Door Position Option
Front & Top

Antiquity Glass Insert *18″ - 33″ H*	*Ravenna Glass Insert* *18″ - 33″ H*
1RAATQ1	**1RARAV1**
2RAATQ1	**2RARAV1**
3RAATQ1	**3RARAV1**
4RAATQ1	**4RARAV1**
36″ - 42″ H	*36″ - 42″ H*
1RAATQ2	**1RARAV2**
2RAATQ2	**2RARAV2**
3RAATQ2	**3RARAV2**
4RAATQ2	**4RARAV2**
Bistro Glass Insert *18″ - 33″ H*	*Shadow Glass Insert* *18″ - 33″ H*
1RA1	**1RASHW1**
2RA1	**2RASHW1**
3RA1	**3RASHW1**
4RA1	**4RASHW1**
36″ - 42″ H	*36″ - 42″ H*
1RA2	**1RASHW2**
2RA2	**2RASHW2**
3RA2	**3RASHW2**
4RA2	**4RASHW2**

- Standard Mullion Profile: The outside profile of a Mullion door will match the profile of the selected door style. The inside profile and mullion profile will always be the same, as pictured
- Only available on doors 18″ wide (nominal) and wider with stiles and rails 2 3/8″ or less
- Available in full overlay door styles only
- Available in Cherry and Maple door styles only
- ***Not*** available in Rustic door styles
- Change Width (CW) option ***not*** available
- Change Height (CH) option ***not*** available
- If ordered in an arched door style, it will be supplied square
- For descriptions of the glass or specialty inserts available in Mullion Doors, see Camed Glass, Classic Glass, Etched Glass, Layered Glass, Specialty Inserts and Textured Glass sections within Decorative Doors and Inserts
- Order Example: W1830R-1RAATQ1; W1842R-1RARAV2

Showcase Mullion

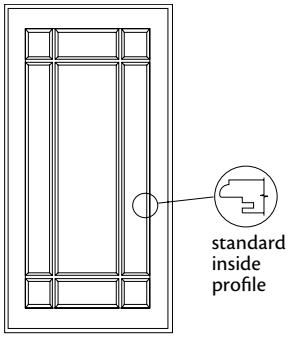

Cabinet Width	Nominal Height								
	15″	18″	21″	24″	27″	30″	36″	39″	42″
*12	●	●		●		●	●	●	●
15	●	●		●		●	●	●	●
18	●	●		●		●	●	●	●
21		●		●		●	●	●	●
24				●		●	●	●	●
*24BUTT		●		●		●	●	●	●
27(Butt)	●	●		●		●	●	●	●
30	●	●	●	●	●	●	●	●	●
33	●	●		●		●	●	●	●
36	●	●	●	●	●	●	●	●	●
39	●			●		●			
42		●		●		●	●	●	●
45				●		●			
48	●	●		●		●			
WA24				●		●	●	●	●
WCA12						●	●	●	●
WEA12				●		●	●	●	●

Dark gray shaded sizes feature annealed glass vs tempered glass

*__Not__ available on door styles with 3" stiles and rails

Glass Door Position Option
Front & Top

Antiquity Glass Insert *15″ - 33″ H*	*Ravenna Glass Insert* *15″ - 33″ H*
1SDATQ1	**1SDRAV1**
2SDATQ1	**2SDRAV1**
3SDATQ1	**3SDRAV1**
4SDATQ1	**4SDRAV1**
36″ - 42″ H	*36″ - 42″ H*
1SDATQ2	**1SDRAV2**
2SDATQ2	**2SDRAV2**
3SDATQ2	**3SDRAV2**
4SDATQ2	**4SDRAV2**
Bistro Glass Insert *15″ - 33″ H*	*Shadow Glass Insert* *15″ - 33″ H*
1SD1	**1SDSHW1**
2SD1	**2SDSHW1**
3SD1	**3SDSHW1**
4SD1	**4SDSHW1**
36″ - 42″ H	*36″ - 42″ H*
1SD2	**1SDSHW2**
2SD2	**2SDSHW2**
3SD2	**3SDSHW2**
4SD2	**4SDSHW2**

- Standard Mullion Profile: The outside profile of a Mullion door will match the profile of the selected door style. The inside profile and mullion profile will always be the same, as pictured
- Showcase door has 2" x 2" lites in each corner and is always 3 lites wide by 3 lites high
- Center section varies in width and height
- Consult chart for availability
- ***Not*** available in Rustic door styles
- ***Not*** available in EverCore™ door styles
- ***Not*** available in High-Gloss Foil, Thermofoil or Wood-Grain Foil door styles
- Change Width (CW) option ***not*** available
- Change Height (CH) option ***not*** available
- If ordered in an arched door style, it will be supplied square
- For descriptions of the glass or specialty inserts available in Mullion Doors, see Camed Glass, Classic Glass, Etched Glass, Layered Glass, Specialty Inserts and Textured Glass sections within Decorative Doors and Inserts
- Order Example: W1830L-1SD1; W1842L-1SDATQ2

Traditional Mullion

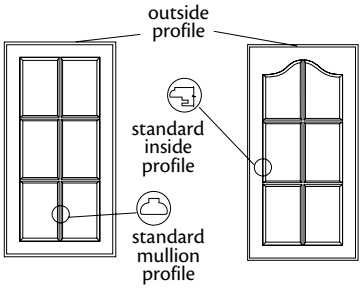

Lite Configurations

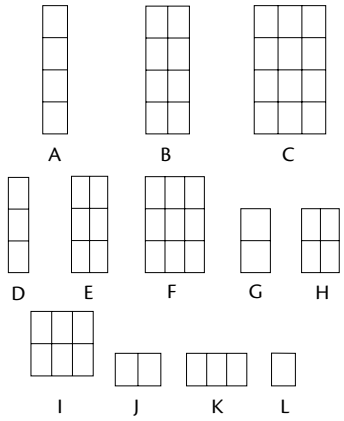

Cabinet Width	Nominal Height										
	12"	15"	18"	21"	24"	27"	30"	33"	36"	39"	42"
12	L	L	G		G		D	D	A	A	A
15	J	J	H		H	H	E	E	B	B	B
18	J	J	H		H	H	E	E	B	B	B
21	K	K	I		I		F	F	C	C	C
24	K		I		I	F	F	F	C	C	C
24BUTT	L	L	G		G	D	D	D	A	A	A
27	J	J	H	H	H	E	E	E	B	B	B
30	J	J	H	H	H	E	E	E	B	B	B
33BUTT	J	J	H	H	H	E	E	E	B	B	B
34BUTT		J	H	H	H	E	E	E			
36BUTT	J	J	H	H	H	E	E	E	B	B	B
37BUTT		J	H	H	H	E	E	E			
39	K	K	I		I	F	F	F		C	C
42			I	I	I		F	F	C	C	C
43	K	K	I								
45					I		F	F			
48	J	J	H		I		F	F	C	C	C
WR34BUTT		J	H	H	H	E	E	E			
WR37BUTT		J	H	H	H	E	E	E			
WR42	K		I								
WR43		K	I								
WR48	K	K	I								
WA24/27	J	J	H		H		E	E	B	B	B
(W)EZR24							D	D	A	A	A
(W)EZR36							D	D	A		A
WCA12		J	H	H	H	E	E	E	B	B	B

Mullion doors are shipped in the following configurations shown above.
No modifications are available.

Glass Door Position Option
Front & Top

Antiquity Glass Insert
12" - 33" H
1MDATQ1
2MDATQ1
3MDATQ1
4MDATQ1
36" - 42" H
1MDATQ2
2MDATQ2
3MDATQ2
4MDATQ2

Bistro Glass Insert
12" - 33" H
1MD1
2MD1
3MD1
4MD1
36" - 42" H
1MD2
2MD2
3MD2
4MD2

Mirage Glass Insert
12" - 33" H
1MDMIR1
2MDMIR1
3MDMIR1
4MDMIR1
36" - 42" H
1MDMIR2
2MDMIR2
3MDMIR2
4MDMIR2

Ravenna Glass Insert
12" - 33" H
1MDRAV1
2MDRAV1
3MDRAV1
4MDRAV1
36" - 42" H
1MDRAV2
2MDRAV2
3MDRAV2
4MDRAV2

Shadow Glass Insert
12" - 33" H
1MDSHW1
2MDSHW1
3MDSHW1
4MDSHW1
36" - 42" H
1MDSHW2
2MDSHW2
3MDSHW2
4MDSHW2

- Standard Mullion Profile: The outside profile of a Mullion door will match the profile of the selected door style. The inside profile and mullion profile will always be the same, as pictured
- To determine the Mullion Door Lite configuration for your selected cabinet, refer to the chart
- Configuration G, J and K will be supplied with annealed glass vs. tempered glass
- ***Not*** available in Rustic door styles
- ***Not*** available in EverCore™, High-Gloss Foil or Wood-Grain Foil door styles
- Change Width (CW) option ***not*** available
- Change Height (CH) option ***not*** available
- For descriptions of the glass or specialty inserts available in Mullion Doors, see Camed Glass, Classic Glass, Etched Glass, Layered Glass, Specialty Inserts and Textured Glass sections within Decorative Doors and Inserts
- Order Example: W1830-1MD1; W1842-1MDATQ2

Remember, matching interior is ***not*** standard when attaching glass doors to a cabinet. We highly recommend upgrading to matching interior.

Be sure your customer is aware of the mullion configuration when working with sizes requiring patterns A,D,G, J and K.

Vista Mullion

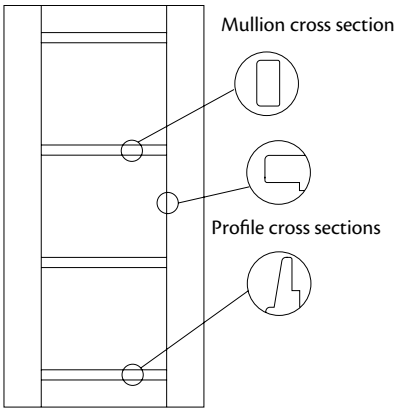

Nominal Height	# of lites	Height of lites
12″	1	–
15″	1	–
18″	2	5 11/16″
21″	2	7 3/16″
24″	2	8 7/16″
26″	2	8 15/16″
27″	3	6 35/64″
30″	3	7 35/64″
33″	3	8 35/64″
36″	4	6 31/32″
39″	4	7 23/32″
42″	4	8 15/32″

Glass Door Position Option
Front & Top

Antiquity Glass Insert
12″ - 33″ H
1VSATQ1
2VSATQ1
3VSATQ1
4VSATQ1
36″ - 42″ H
1VSATQ2
2VSATQ2
3VSATQ2
4VSATQ2

Bistro Glass Insert
12″ - 33″ H
1VS1
2VS1
3VS1
4VS1
36″ - 42″ H
1VS2
2VS2
3VS2
4VS2

Ravenna Glass Insert
12″ - 33″ H
1VSRAV1
2VSRAV1
3VSRAV1
4VSRAV1
36″ - 42″ H
1VSRAV2
2VSRAV2
3VSRAV2
4VSRAV2

Shadow Glass Insert
12″ - 33″ H
1VSSHW1
2VSSHW1
3VSSHW1
4VSSHW1
36″ - 42″ H
1VSSHW2
2VSSHW2
3VSSHW2
4VSSHW2

- Available in Sedona door styles only. Inside profile matches this door style
- ***Not*** available in Rustic door styles
- ***Not*** available in EverCore™ door styles
- Change Width (CW) option ***not*** available
- Change Height (CH) option ***not*** available
- For descriptions of the glass or specialty inserts available in Mullion Doors, see Camed Glass, Classic Glass, Etched Glass, Layered Glass, Specialty Inserts and Textured Glass sections within Decorative Doors and Inserts
- Order Example: W1830L-1VSATQ1; W1842R-1VSRAV2

Specialty Inserts

Leather inserts are textured and both Leather and Chalkboard inserts conceal the contents stored behind the door.

Specialty inserts are available in most door styles, in sizes from 12" wide and up to 62" high.

1	ONL	2
quantity	code	height

Specialty inserts are ordered individually. Place quantity before code. See examples for individual items.

Material dimensions listed may vary slightly from actual dimensions of the product.

Specifications subject to change without notice.

Chalkboard Insert

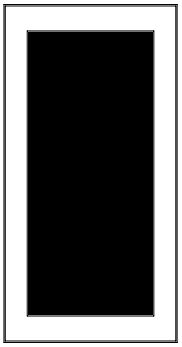

Glass Door Position Option
Front & Top
12" - 33" H

1CKB1
2CKB1
3CKB1
4CKB1

36" - 62" H

1CKB2
2CKB2
3CKB2
4CKB2

- 3/16" thick
- Black chalkboard material on both sides
- ***Not*** available in High-Gloss Foil door styles
- ***Not*** available in Wood-Grain Foil slab door styles
- Order Example: W3030-2CKB1

Leather Inserts

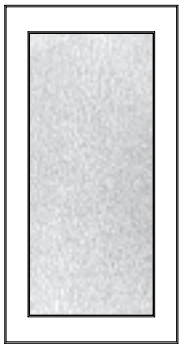

Glass Door Position Option *Front & Top* *Cognac Leather Insert* *12" - 33" H*	*Onyx Leather Insert* *12" - 33" H*
▲ **1COL1**	**1ONL1**
▲ **2COL1**	**2ONL1**
▲ **3COL1**	**3ONL1**
▲ **4COL1**	**4ONL1**
36" - 62" H	*36" - 62" H*
▲ **1COL2**	**1ONL2**
▲ **2COL2**	**2ONL2**
▲ **3COL2**	**3ONL2**
▲ **4COL2**	**4ONL2**

▲ Color coordination with Cognac stain will vary based on wood species

- Leather is on both sides; applied to an MDF substrate
- ***Not*** available in High-Gloss Foil door styles
- ***Not*** available in Wood-Grain Foil slab door styles
- Change Width (CW) option ***not*** available
- Change Height (CH) option ***not*** available
- Order Example: W3030-2ONL1

Cleaning Tip: Use a damp, well wrung out terry cloth or microfiber towel to wipe down the leather material

Textured Glass

Textured glass includes a variety of patterns that create a translucent view of objects stored behind the door. The shapes and colors of objects remain visible, but their lines are diffused.

Textured glass is available in most door styles, in sizes from 12" wide and up to 62" high.

2	RAV	1
quantity	code	height code

Glass inserts are ordered individually. Place quantity before order code. See examples for individual items.

Material dimensions listed may vary slightly from actual dimensions of the product.

See Construction Options section for specific information on each glass type.

Specifications subject to change without notice.

Cascade Insert

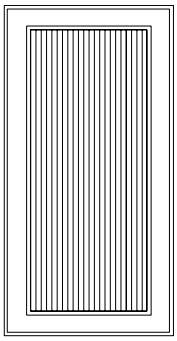

Glass Door Position Option
Front & Top
12" - 33" H
1CAS1
2CAS1
3CAS1
4CAS1
36" - 62" H
1CAS2
2CAS2
3CAS2
4CAS2

- Clear tempered glass with 1/2" wide vertical reeds
- ***Not*** available in High-Gloss Foil door styles
- ***Not*** available in Wood-Grain Foil door styles
- Order Example: W1842R-1CAS2

Dolace Insert

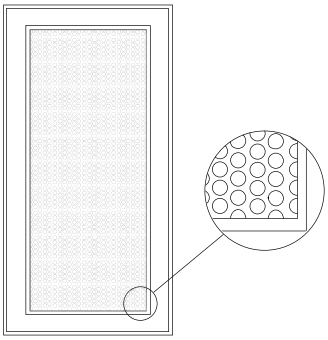

Glass Door Position Options

Front
12" - 33" H
1DOL1
2DOL1
3DOL1
4DOL1
36" - 62" H
1DOL2
2DOL2
3DOL2
4DOL2

Front & End
12" - 33" H
2DOL ▪1E
3DOL ▪1E
36" - 62" H
2DOL ▪2E
3DOL ▪2E

Front & Ends Both
12" - 33" H
3DOL ▪1EB
4DOL ▪1EB
36" - 62" H
3DOL ▪2EB
4DOL ▪2EB

Top
12" - 33" H
1DOL ▪1T
2DOL ▪1T
36" - 62" H
1DOL ▪2T
2DOL ▪2T

Top & End
12" - 33" H
2DOL ▪1T▪E
3DOL ▪1T▪E
36" - 62" H
2DOL ▪2T▪E
3DOL ▪2T▪E

Top & Ends Both
12" - 33" H
3DOL ▪1T▪TEB
4DOL ▪1T▪TEB

Top & Bottom
12" - 33" H
(Top & Bottom)
2DOL ▪1T▪1B
4DOL ▪1T▪1B
12" - 33" H (Top),
36" - 62" H (Bottom)
2DOL ▪1T▪2B
4DOL ▪1T▪2B

36" - 62" H (Top & Bottom)
2DOL ▪2T▪2B
4DOL ▪2T▪2B

Top & Bottom & End
12" - 33" H (Top & Bottom)
4DOL ▪1T▪1B▪TE▪BE
6DOL ▪1T▪1B▪TE▪BE
12" - 33" H (Top),
36" - 62" H (Bottom)
4DOL ▪1T▪2B▪TE▪BE
6DOL ▪1T▪2B▪TE▪BE
36" - 62" H (Top & Bottom)
4DOL ▪2T▪2B▪TE▪BE
6DOL ▪2T▪2B▪TE▪BE

Top & Bottom & Ends Both
12" - 33" H (Top & Bottom)
6DOL ▪1TEB▪1BEB
8DOL ▪1TEB▪1BEB
12" - 33" H (Top),
36" - 62" H (Bottom)
6DOL ▪1TEB▪2BEB
8DOL ▪1TEB▪2BEB

Bottom
12" - 33" H
1DOL ▪1B
2DOL ▪1B

36" - 62" H
1DOL ▪2B
2DOL ▪2B

Bottom & End
12" - 33" H
2DOL ▪1B▪E
3DOL ▪1B▪E
36" - 62" H
2DOL ▪2B▪E
3DOL ▪2B▪E

Bottom & Ends Both
12" - 33" H
3DOL ▪1B▪BEB
4DOL ▪1B▪BEB
36" - 62" H
3DOL ▪2B▪BEB
4DOL ▪2B▪BEB

- Obscure tempered glass with a uniform pebble pattern
- ***Not*** available in High-Gloss Foil door styles
- ***Not*** available in Wood-Grain Foil slab door styles
- See glass door position availability charts in the front of this section for more information
- Order Example: W1830L-1DOL1

Grey color coding indicates new product, size or code.

Modern Textured Insert



Glass Door Position Option
Front & Top
12" - 33" H

1MRT1
2MRT1
3MRT1
4MRT1

36" - 48" H

1MRT2
2MRT2
3MRT2
4MRT2

- Clear film laminated between pieces of textured obscured clear glass with droplet (seeded) impressions throughout
- Available in full overlay door styles only
- Available in Cherry, EverCore™, Thermofoil, Maple and White Wood-Grain Foil door styles only
- ***Not*** available in Wood-Grain Foil slab door styles
- ***Not*** available in High-Gloss Foil door styles
- ***Not*** available on doors wider than 24"
- Order Example: W1830L-1MRT1

Moire Insert

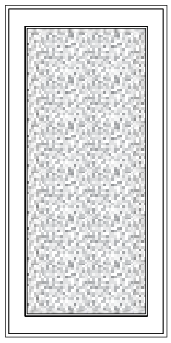

Glass Door Position Option
Front & Top
12" - 33" H

1MOI1
2MOI1
3MOI1
4MOI1

36" - 62" H

1MOI2
2MOI2
3MOI2
4MOI2

- Coarse pebbled glass
- ***Not*** available in High-Gloss Foil door styles
- ***Not*** available in Wood-Grain Foil slab door styles
- Order Example: PW3042-4MOI2

Ravenna Insert

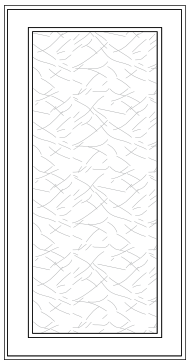

Glass Door Position Options

Front
12" - 33" H

1RAV1
2RAV1
3RAV1
4RAV1

36" - 48" H

1RAV2
2RAV2
3RAV2
4RAV2

Front & End
12" - 33" H

2RAV ▪1E
3RAV ▪1E

36" - 48" H

2RAV ▪2E
3RAV ▪2E

Front & Ends Both
12" - 33" H

3RAV ▪1EB
4RAV ▪1EB

36" - 48" H

3RAV ▪2EB
4RAV ▪2EB

Top
12" - 33" H

1RAV ▪1T
2RAV ▪1T

36" - 48" H

1RAV ▪2T
2RAV ▪2T

Top & End
12" - 33" H

2RAV ▪1T▪E
3RAV ▪1T▪E

36" - 48" H

2RAV ▪2T▪E
3RAV ▪2T▪E

Top & Ends Both
12" - 33" H

3RAV ▪1T▪TEB
4RAV ▪1T▪TEB

Top & Bottom
12" - 33" H (Top & Bottom)

2RAV ▪1T▪1B
4RAV ▪1T▪1B

12" - 33" H (Top),
36" - 48" H (Bottom)

2RAV ▪1T▪2B
4RAV ▪1T▪2B

Top & Bottom & End
12" - 33" H (Top & Bottom)

4RAV ▪1T▪1B▪TE▪BE
6RAV ▪1T▪1B▪TE▪BE

12" - 33" H (Top),
36" - 48" H (Bottom)

4RAV ▪1T▪2B▪TE▪BE
6RAV ▪1T▪2B▪TE▪BE

Top & Bottom & Ends Both
12" - 33" H (Top & Bottom)

6RAV ▪1TEB▪1BEB
8RAV ▪1TEB▪1BEB

12" - 33" H (Top),
36" - 48" H (Bottom)

6RAV ▪1TEB▪2BEB
8RAV ▪1TEB▪2BEB

Bottom
12" - 33" H

1RAV ▪1B
2RAV ▪1B

36" - 48" H

1RAV ▪2B
2RAV ▪2B

Bottom & End
12" - 33" H

2RAV ▪1B▪E
3RAV ▪1B▪E

36" - 48" H

2RAV ▪2B▪E
3RAV ▪2B▪E

Bottom & Ends Both
12" - 33" H

3RAV ▪1B▪BEB
4RAV ▪1B▪BEB

36" - 48" H

3RAV ▪2B▪BEB
4RAV ▪2B▪BEB

- Clear tempered "spider web" glass duplicating the look of antique hand blown glass
- ***Not*** available in High-Gloss Foil door styles
- ***Not*** available in Wood-Grain Foil slab door styles
- See glass door position availability charts in the front of this section for more information
- Order Example: W1830L-1RAV1

Grey color coding indicates new product, size or code.

Styx Insert

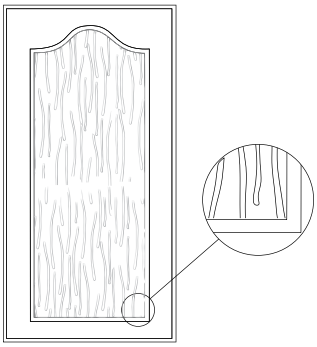

Glass Door Position Option
Front & Top
12" - 33" H

1STY1
2STY1
3STY1
4STY1

36" - 62" H

1STY2
2STY2
3STY2
4STY2

- Obscure patterned tempered glass
- ***Not*** available in High-Gloss Foil door styles
- ***Not*** available in Wood-Grain Foil slab door styles
- Order Example: W3636-2STY2

Vauxhall Insert

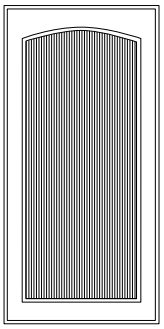

Glass Door Position Option
Front & Top
12" - 33" H

1VAU1
2VAU1
3VAU1
4VAU1

36" - 62" H

1VAU2
2VAU2
3VAU2
4VAU2

- Obscure tempered glass with 1/8" wide vertical reeds
- ***Not*** available in High-Gloss Foil door styles
- ***Not*** available in Wood-Grain Foil slab door styles
- Order Example: W1830R-1VAU1

Remember, matching interior is ***not*** standard when attaching glass doors to a cabinet. We highly recommend upgrading to matching interior.

LED Lighting

Construction Options and Modifications

LED
code

LED is an energy efficient source for kitchen and bath lighting needs.

Puck and strip lights have 3000K light color (warm white). All products are 24V DC power. All wires are white.

Each LED light is tested at 50,000 hours of run time. LED products carry a limited warranty.

Specifications are subject to change without notice.

LED Light Sources

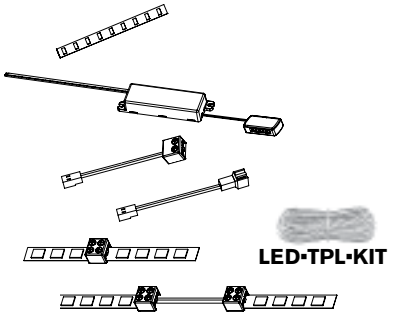

LED•TPL•KIT

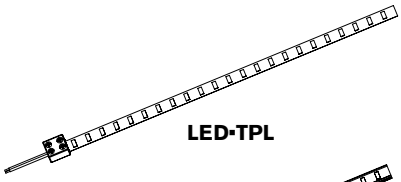

LED•TPL

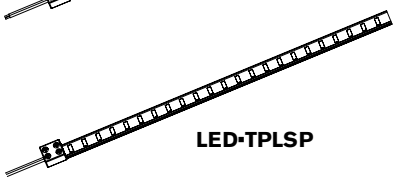

LED•TPLSP

LED Flexible Strip Tape Light - LED Light Sources

LED Flexible Strip Tape Light

LED•TPL

LED Flexible Strip Splash Proof Tape Light

LED•TPLSP

LED Flexible Strip Tape Light Kit

LED•TPL•KIT

- Kit includes: (1) LED Flexible Strip Tape Light (LED•TPL)
  (1) DayBreak Dimmable Driver 40W (LED•DDR40)
  (2) 8' Power Cables (LED•PC)
  (2) 8' Power Extension Cables (LED•PEC8)
  (2) End-to-End Connectors (LED•ETEC)
  (3) Connector Kits for Wire Length (LED•CLC)
  (1) Stranded Copper Wire (LED•SCW25)

- Standard LED flexible strip tape with self adhesive backing
- 16.4' long; 0.32" wide; ~0.15" tall; 300 diodes; 18W
- Warm white illumination
- 120 degree beam angle, 84 lumens per foot
- A power cable (LED.PC) is required to connect strip tape lighting to a power supply. Strip tape lengths ***cannot*** exceed 16.4' out of a single power supply port. An additional power cable (LED.PC) plugged into an unused power supply port is required for applications exceeding 16.4'. Make sure power supplies are ***not*** overloaded based on watt capacity. See "LED Power Supply" section for capacity details
- For use under-cabinet, over-cabinet, toe kick and cabinet interiors
- Use LED•TPLSP for splash zones i.e. toe-kick space
- Custom lengths can be cut in increments of 2", ***not*** to exceed a total of 16.4'. Use End-to-End Connector (LED•ETEC) to join custom lengths
- Use Connector Kit for Custom Wire Length (LED•CLC) with Standard Copper Wire (LED•SCW25) to navigate corners or other obstacles
- Use Motion Sensor Switch (LED•MSS) for controlling interior cabinet lighting
- Use 8' Power Extension Cables (LED•PEC8) to increase distance between power supply and beginning of LED flexible strip run

Installers ***must*** clean and prepare surface prior to installation. An alcohol pad works well to remove oils

---

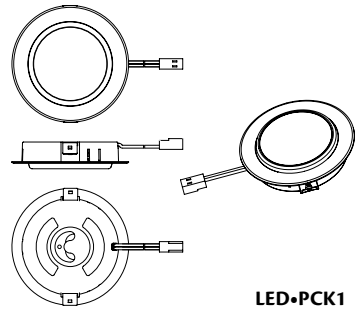

LED•PCK1

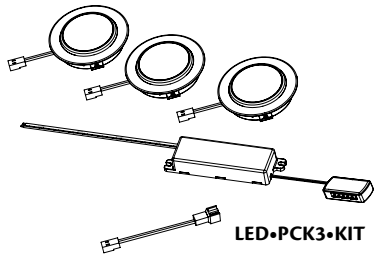

LED•PCK3•KIT

LED Puck Light

LED•PCK1

LED•PCK3•KIT

- Kit includes: (3) LED Puck Lights (LED•PCK1)
  (1) DayBreak Dimmable Driver 40W (LED•DDR40)
  (2) 8' Power Extension Cables (LED•PEC8)

- One light with 8' power cable; 2.4W
- Warm white illumination
- 12 degree directional swivel
- 144 lumens; 70 degree beam angle
- For surface mount or recess installation
- Units are 2 9/16" diameter. Requires 2 1/4" diameter circle cut out for recess installation
- Use 8' power extension cables (LED•PEC8) to extend the distance between lights and power supply

Under Cabinet Panel (PUCP, UCP OR UCPWA) provides a clean, built-in look for under cabinet installation

LED Connectors

8' Power Cable - LED Connectors

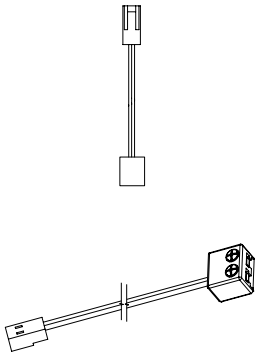

LED•PC

- Cable has male connector on one end and flexible strip connector on the other
- Used to start the flexible strip light run

8' Power Extension Cable

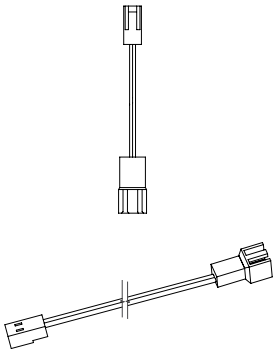

LED•PEC8

- Cable has male connector on one end and female connector on the other
- Used to extend the distance between the power supply and the light source
- Several cables may be connected to extend the length if needed

Connector Kit for Custom Wire Length



LED•CLC

- Contains two connectors
- For use when adding a cut-to-length wire section to navigate LED Flexible Strip Tape Light (LED•TPL or LED•TPLSP) around corners or obstacles

End-to-End Connector



LED•ETEC

- Connects two pieces of LED Flexible Strip Tape Lights (LED•TPL or LED•TPLSP) end to end

Stranded Copper Wire



LED•SCW25

- Use with Connector Kit (LED•CLC) for custom wire length

LED Power Supply

New

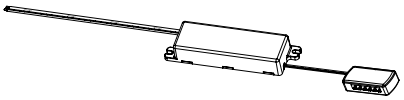

DayBreak Dimmable Driver - LED Power Supply

40 Watts

LED•DDR40

Grey color coding indicates new product, size or code.

- -24V DC; 40 W, 12 port connector block can be used for up to 40 total watts of lighting
- Requires electrical outlet or junction box to connect to power
- Converts 120V AC power to 24V DC power
- Can be used with most standard TRIAC wall dimmers (ex. Lutron DVWCL-153PDH). Verify compatibility with switch manufacturer's specifications
- Comes with a 5' long power cord and optional plug head

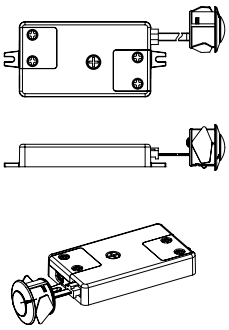

Motion Sensor On/Off Switch - LED Switches

LED•MSS

- Medium range motion sensor ideal for interior cabinet installation. Lights are activated by motion of opening cabinet doors
- Includes 12-port connector block
- One switch can be used to activate lighting for single or double door cabinets
- Adjustable timer controls the length of time lights remain on; up to 6 minutes
- 5' long cable between sensor and controller
- The sensor eye ***must*** be recess mounted and requires a 20mm hole

---

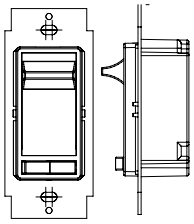

•SP

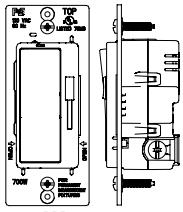

•3W

Low Voltage LED Wall Dimmer Switch

LED•WDS•3W
LED•WDS•SP

- White, wall dimmer switch for single gang box
- Functions as both an on/off and dimmer switch
- Use LED•WDS•3W for rooms with multiple entrances and switches
- Use LED•WDS•SP for rooms with a single entrance and switch
- Faceplate ***not*** included. Purchase separately to match decor

LED Connection Options

LED Connection Options

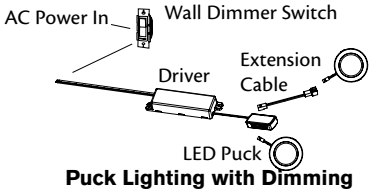

Puck Lighting with Dimming

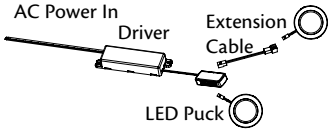

Puck Lighting without Dimming

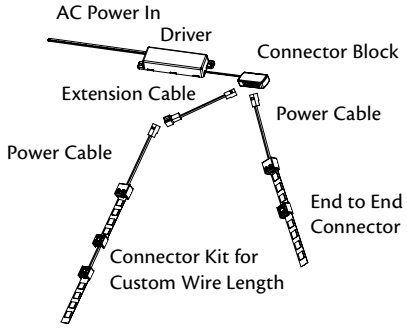

Strip Lighting without Dimming

Do ***not*** attach more lights than the driver has wattage to support

For instructional information on designing and installing lighting, visit www.kminfo.com. The Lighting Wizard is located under the Training tab.

- KraftMaid® products are designed to give you the ultimate versatility in designing lighting solutions. The following examples show the use of puck lighting and strip lighting, along with the various accessories:
- The best power source for LED Lighting is called a driver. The patented technology in your driver allows it to be used as both a dimmable driver and a regular driver. The driver is powered by standard AC line voltage of 120VAC. The driver can be plugged into an outlet by using the plug head included or can be hardwired into a junction box
- Puck lights attach to the driver in a "hub and spoke" configuration. The driver has a 12-port connector block. Each light comes equipped with a 98" power lead. Should you require a longer power lead, use a power extension cord
- Each run of strip lights attach to the driver in a "hub and spoke" configuration. The driver has a 12-port connector block. Each series of strips require the use of one power cable. Should you require a longer power lead, use a power extension cable
- Connectors allow you to run more than one segment of LED strip from a single power cable. The End to End Connector joins smaller pieces of LED tape together to form longer segments. For example, if you are installing toe kick lighting, but need to skip past the refrigerator, use the Connector Kit for Custom Wire Length. After wiring around the refrigerator, you can continue your lighting on the other side

Supports and Valances

CTS
code

Valance backs are ***not*** finished.

Material dimensions listed may vary slightly from actual dimensions of the product.

Specifications subject to change without notice.

Construction Options and Modifications

- ❖ Included as standard
- ● Available with an upcharge
- ☆ Available with exceptions
- (Blank) ***Not*** available

A	Alder
B	Birch
C	Cherry
E	EverCore™
H	Hickory
TH	Thermofoil
HG	High-Gloss Foil
WG	Wood-Grain Foil
M	Maple
O	Oak
QS	Quartersawn

Countertop Support

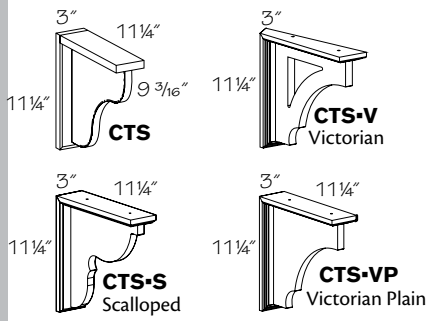

■ **CTS**

Victorian
CTS •V

Scalloped
■ **CTS •S**

Victorian Plain
CTS •VP

■ ***Not*** available in Wood-Grain Foil door styles

- Solid wood
- Painted hardwood supplied for EverCore™ and Thermofoil
- Painted or Stained hardwood supplied for Wood-Grain Foil door styles
- For use when extra support for shelves or overhanging countertop is required

☆ ***Not*** available in Morristown; Melrose and Putnam supplied plain sawn

❖	A
❖	B
❖	C
❖	E
❖	H
❖	TH
	HG
☆	WG
❖	M
❖	O
☆	QS

Mission Angle Support

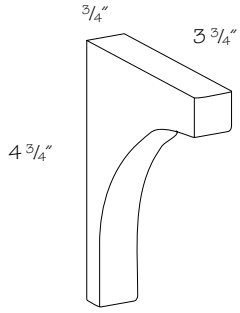

MAS

- Solid wood
- Painted hardwood supplied for EverCore™
- Plain sawn material supplied for Barnet Crafted door styles
- Corner piece from shelf support bracket only
- ***Not*** available in Reduced Depth (RD)

❖	A
	B
❖	C
❖	E
	H
	TH
	HG
	WG
❖	M
	O
☆	QS

Mission Countertop Support

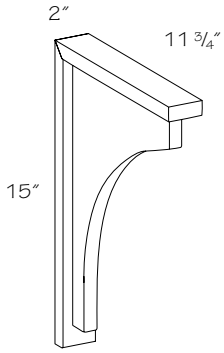

MCTS

- Solid wood
- Painted hardwood supplied for EverCore™
- Plain sawn material supplied for Barnet Crafted door styles
- For use when extra support for shelves or overhanging countertop is required
- ***Not*** available in Reduced Depth (RD)

❖	A
	B
❖	C
❖	E
	H
	TH
	HG
	WG
❖	M
	O
❖	QS

Mission Shelf Support Bracket

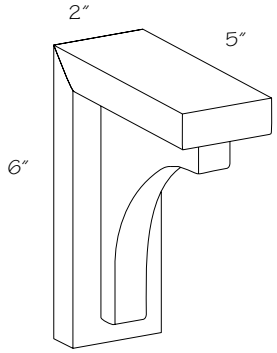

MSSB

- Solid wood
- Painted hardwood supplied for EverCore™
- Plain sawn material supplied for Barnet Crafted door styles
- ***Not*** available in Reduced Depth (RD)

❖	A
	B
❖	C
❖	E
	H
	TH
	HG
	WG
❖	M
	O
❖	QS

Shelf Support Bracket

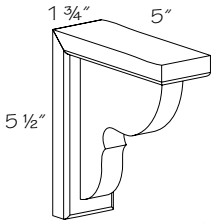

SSB•S
Scalloped

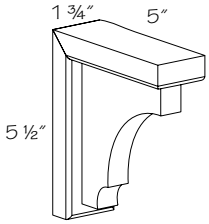

SSB•V
Victorian

Scalloped
SSB •S
Victorian
■ **SSB •V**
■ ***Not*** available in Wood-Grain Foil door styles

- Painted hardwood supplied for EverCore™ and Thermofoil
- Painted or Stained hardwood supplied for Wood-Grain Foil door styles

☆ ***Not*** available in Morristown; Melrose and Putnam supplied plain sawn

❖	A
❖	B
❖	C
❖	E
❖	H
❖	TH
	HG
☆	WG
❖	M
❖	O
☆	QS

Valance Cove

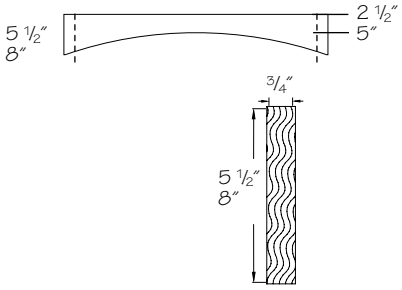

5 1/2" high	*8" high*
V18 CV	**V1808 CV**
V21 CV	**V2108 CV**
V24 CV	**V2408 CV**
V27 CV	**V2708 CV**
V30 CV	**V3008 CV**
V33 CV	**V3308 CV**
V36 CV	**V3608 CV**
V39 CV	**V3908 CV**
V42 CV	**V4208 CV**
V45 CV	**V4508 CV**
V48 CV	**V4808 CV**
V51 CV	**V5108 CV**
V54 CV	**V5408 CV**
V57 CV	**V5708 CV**
V60 CV	**V6008 CV**
V63 CV	**V6308 CV**
V66 CV	**V6608 CV**
V69 CV	**V6908 CV**
V72 CV	**V7208 CV**
V75 CV	**V7508 CV**
V78 CV	**V7808 CV**
V81 CV	**V8108 CV**
V84 CV	**V8408 CV**
V87 CV	**V8708 CV**
V90 CV	**V9008 CV**
V93 CV	**V9308 CV**
V96 CV	**V9608 CV**

- 3/4" thick solid wood
- Painted hardwood supplied for EverCore™ and Thermofoil
- Painted or Stained hardwood supplied for Wood-Grain Foil door styles
- Can be trimmed in field 1 1/2" each end, but will compromise design by reducing height

☆ ***Not*** available in Morristown; Melrose and Putnam supplied plain sawn

❖	A
❖	B
❖	C
❖	E
❖	H
❖	TH
	HG
❖	WG
❖	M
❖	O
☆	QS

Valance Crown

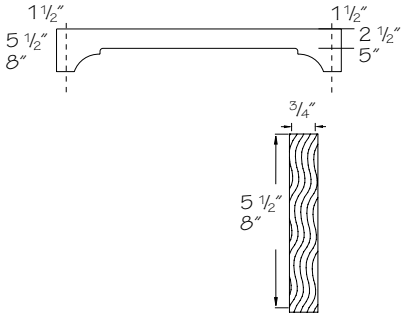

5 1/2" high	*8" high*
V18 CR	**V1808 CR**
V21 CR	**V2108 CR**
V24 CR	**V2408 CR**
V27 CR	**V2708 CR**
V30 CR	**V3008 CR**
V33 CR	**V3308 CR**
V36 CR	**V3608 CR**
V39 CR	**V3908 CR**
V42 CR	**V4208 CR**
V45 CR	**V4508 CR**
V48 CR	**V4808 CR**
V51 CR	**V5108 CR**
V54 CR	**V5408 CR**
V57 CR	**V5708 CR**
V60 CR	**V6008 CR**
V63 CR	**V6308 CR**
V66 CR	**V6608 CR**
V69 CR	**V6908 CR**
V72 CR	**V7208 CR**
V75 CR	**V7508 CR**
V78 CR	**V7808 CR**
V81 CR	**V8108 CR**
V84 CR	**V8408 CR**
V87 CR	**V8708 CR**
V90 CR	**V9008 CR**
V93 CR	**V9308 CR**
V96 CR	**V9608 CR**

- 3/4" thick solid wood
- Painted hardwood supplied for EverCore™ and Thermofoil
- Painted or Stained hardwood supplied for Wood-Grain Foil door styles
- Can be trimmed in field 1 1/2" each end

☆ ***Not*** available in Morristown; Melrose and Putnam supplied plain sawn

❖	A
❖	B
❖	C
❖	E
❖	H
❖	TH
	HG
❖	WG
❖	M
❖	O
☆	QS

Valance Traditional

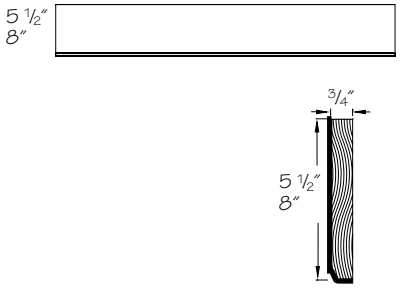

5 1/2" high	*8" high*
V18 T	**V1808 T**
V24 T	**V2408 T**
V30 T	**V3008 T**
V36 T	**V3608 T**
V48 T	**V4808 T**
V60 T	**V6008 T**
V72 T	**V7208 T**
V84 T	**V8408 T**
V96 T	**V9608 T**

- 3/4" thick solid wood
- Painted hardwood supplied for EverCore™ and Thermofoil
- Painted or Stained hardwood supplied for Wood-Grain Foil door styles
- Trimmable in field
- Can be used as furniture valance

☆ ***Not*** available in Morristown; Melrose and Putnam supplied plain sawn

❖	A
❖	B
❖	C
❖	E
❖	H
❖	TH
	HG
❖	WG
❖	M
❖	O
☆	QS

Valance Furniture

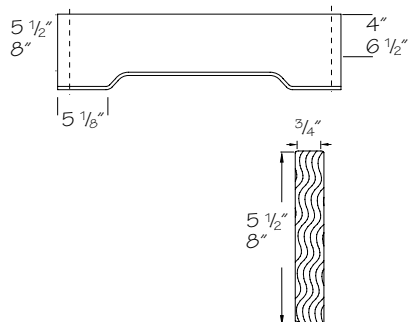

5 1/2" high	*8" high*
V18 F	**V1808 F**
V21 F	**V2108 F**
V24 F	**V2408 F**
V27 F	**V2708 F**
V30 F	**V3008 F**
V33 F	**V3308 F**
V36 F	**V3608 F**
V39 F	**V3908 F**
V42 F	**V4208 F**
V45 F	**V4508 F**
V48 F	**V4808 F**
V51 F	**V5108 F**
V54 F	**V5408 F**
V57 F	**V5708 F**
V60 F	**V6008 F**
V63 F	**V6308 F**
V66 F	**V6608 F**
V69 F	**V6908 F**
V72 F	**V7208 F**
V75 F	**V7508 F**
V78 F	**V7808 F**
V81 F	**V8108 F**
V84 F	**V8408 F**
V87 F	**V8708 F**
V90 F	**V9008 F**
V93 F	**V9308 F**
V96 F	**V9608 F**

- 3/4" thick solid wood
- Painted hardwood supplied for EverCore™ and Thermofoil
- Painted or Stained hardwood supplied for Wood-Grain Foil door styles
- Can be trimmed in field 1 1/2" each end

☆ ***Not*** available in Morristown; Melrose and Putnam supplied plain sawn

❖	A
❖	B
❖	C
❖	E
❖	H
❖	TH
	HG
❖	WG
❖	M
❖	O
☆	QS

Valance Corbel

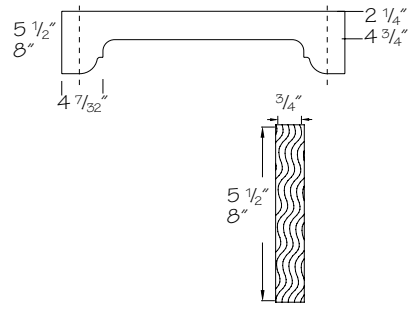

5 1/2" high	*8" high*
V18 CB	**V1808 CB**
V21 CB	**V2108 CB**
V24 CB	**V2408 CB**
V27 CB	**V2708 CB**
V30 CB	**V3008 CB**
V33 CB	**V3308 CB**
V36 CB	**V3608 CB**
V39 CB	**V3908 CB**
V42 CB	**V4208 CB**
V45 CB	**V4508 CB**
V48 CB	**V4808 CB**
V51 CB	**V5108 CB**
V54 CB	**V5408 CB**
V57 CB	**V5708 CB**
V60 CB	**V6008 CB**
V63 CB	**V6308 CB**
V66 CB	**V6608 CB**
V69 CB	**V6908 CB**
V72 CB	**V7208 CB**
V75 CB	**V7508 CB**
V78 CB	**V7808 CB**
V81 CB	**V8108 CB**
V84 CB	**V8408 CB**
V87 CB	**V8708 CB**
V90 CB	**V9008 CB**
V93 CB	**V9308 CB**
V96 CB	**V9608 CB**

- 3/4" thick solid wood
- Can be trimmed in field 1 1/2" each end
- Painted hardwood supplied for EverCore™ and Thermofoil
- Painted or Stained hardwood supplied for Wood-Grain Foil door styles

☆ ***Not*** available in Morristown; Melrose and Putnam supplied plain sawn

❖	A
❖	B
❖	C
❖	E
❖	H
❖	TH
	HG
❖	WG
❖	M
❖	O
☆	QS

Valance Shaker

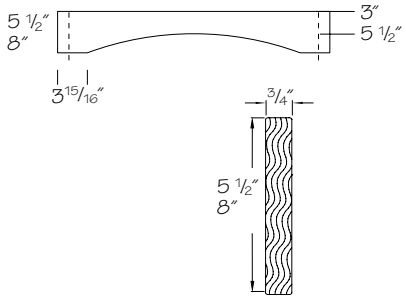

5 1/2" high	*8" high*
V18 SH	**V1808 SH**
V21 SH	**V2108 SH**
V24 SH	**V2408 SH**
V27 SH	**V2708 SH**
V30 SH	**V3008 SH**
V33 SH	**V3308 SH**
V36 SH	**V3608 SH**
V39 SH	**V3908 SH**
V42 SH	**V4208 SH**
V45 SH	**V4508 SH**
V48 SH	**V4808 SH**
V51 SH	**V5108 SH**
V54 SH	**V5408 SH**
V57 SH	**V5708 SH**
V60 SH	**V6008 SH**
V63 SH	**V6308 SH**
V66 SH	**V6608 SH**
V69 SH	**V6908 SH**
V72 SH	**V7208 SH**
V75 SH	**V7508 SH**
V78 SH	**V7808 SH**
V81 SH	**V8108 SH**
V84 SH	**V8408 SH**
V87 SH	**V8708 SH**
V90 SH	**V9008 SH**
V93 SH	**V9308 SH**
V96 SH	**V9608 SH**

- 3/4" thick solid wood
- Painted hardwood supplied for EverCore™ and Thermofoil
- Can be trimmed in field 1 1/2" each end
- Painted or Stained hardwood supplied for Wood-Grain Foil door styles

☆ ***Not*** available in Morristown; Melrose and Putnam supplied plain sawn

❖	A
❖	B
❖	C
❖	E
❖	H
❖	TH
	HG
❖	WG
❖	M
❖	O
☆	QS

Valance Contemporary

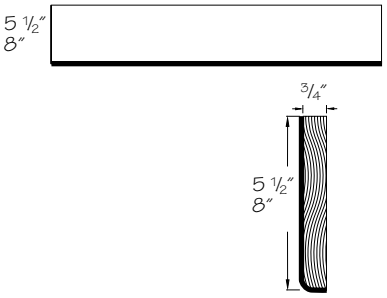

5 1/2" high	*8" high*
V18 C	**V1808 C**
V24 C	**V2408 C**
V30 C	**V3008 C**
V36 C	**V3608 C**
V48 C	**V4808 C**
V60 C	**V6008 C**
V72 C	**V7208 C**
V84 C	**V8408 C**
V96 C	**V9608 C**

- 3/4" thick solid wood
- Painted hardwood supplied for EverCore™ and Thermofoil
- Foil-wrapped MDF supplied for Wood-Grain Foil door styles
- Trimmable in field

☆ ***Not*** available in Morristown; Melrose and Putnam supplied plain sawn

❖	A
❖	B
❖	C
❖	E
❖	H
❖	TH
	HG
❖	WG
❖	M
❖	O
☆	QS

Valance Raised Panel

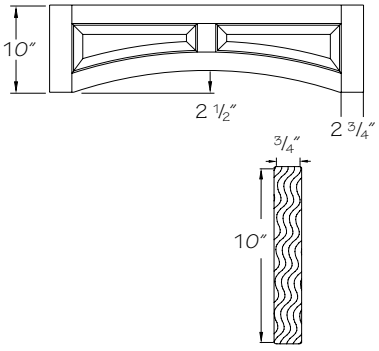

V30 RP
V36 RP
V42 RP
V48 RP
V54 RP
V60 RP

- 3/4" thick solid wood
- ***Not*** trimmable
- Painted hardwood supplied for EverCore™ and Thermofoil
- Painted or Stained hardwood supplied for Wood-Grain Foil door styles

☆ ***Not*** available in Morristown; Melrose and Putnam supplied plain sawn

❖	A
❖	B
❖	C
❖	E
❖	H
❖	TH
	HG
❖	WG
❖	M
❖	O
☆	QS

Valance Flat Panel

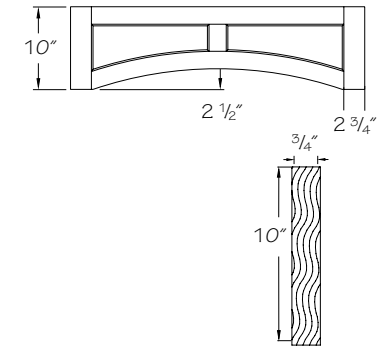

V30 FP
V36 FP
V42 FP
V48 FP
V54 FP
V60 FP

- 3/4" thick solid wood
- ***Not*** trimmable
- Painted hardwood supplied for EverCore™ and Thermofoil
- Painted or Stained hardwood supplied for Wood-Grain Foil door styles

☆ ***Not*** available in Morristown; Melrose and Putnam supplied plain sawn

❖	A
❖	B
❖	C
❖	E
❖	H
❖	TH
	HG
❖	WG
❖	M
❖	O
☆	QS

Valance Straight

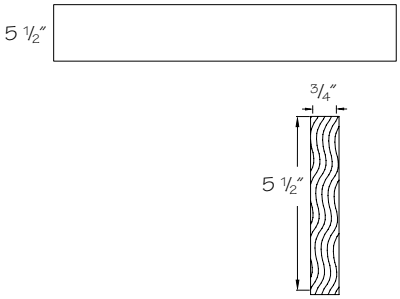

V18 ST
V24 ST
V30 ST
V36 ST
V42 ST
V48 ST
V60 ST
V72 ST
V84 ST

- 3/4" thick solid wood
- Painted hardwood supplied for EverCore™
- Foil-wrapped MDF supplied for Wood-Grain Foil door styles
- Trimmable in field

❖	A
❖	B
❖	C
❖	E
❖	H
	TH
	HG
❖	WG
❖	M
❖	O
❖	QS

Molding

ACM	8
code	length

Construction Options and Modifications

❖ Included as standard
● Available with an upcharge
☆ Available with exceptions
(Blank) ***Not*** available

A	Alder
B	Birch
C	Cherry
E	EverCore™
H	Hickory
TH	Thermofoil
HG	High-Gloss Foil
WG	Wood-Grain Foil
M	Maple
O	Oak
QS	Quartersawn

We offer numerous moldings for decorative and finished applications. Moldings are available in some or all wood species. See chart for coding.

Material dimensions listed may vary slightly from actual dimensions of the product.

All molding ordered in quartersawn door styles will be supplied standard oak unless otherwise noted.

Moldings are ***not*** supplied in High-Gloss laminate and will be supplied with a matte sheen.

Specifications subject to change without notice.

Molding Stack Information



Supplies for installation

- Miter saw and sharp blade
- Screw gun, drill and bits
- 23 and 18 gauge pins and pinners
- Air compressor and hoses
- Laser or level
- Touch up kit and materials
- White soft rag
- Wood glue
- Clamps
- Hammer, nail set or spring loaded nail set
- Tape measure
- 4 ft. and 6 ft. ladder
- #2 pencil, white pencil and sharpener
- Cover for work area

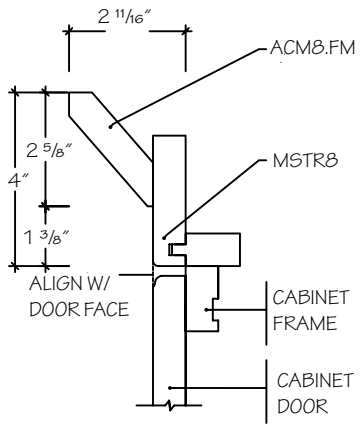

Installation Tips:

- Cover countertops and work area to ensure a clean, free from damage work situation.
- Use a nail gun with a 23 gauge pin for trim. Standard is typically 18 gauge, however the 23 gauge micro pin makes smallest holes to minimize fill work.
- Expect to lose up to 4"- 7" per cut when planning molding requirements.
- Apply finish material to the cut edges using a Touch Up Pen prior to joining the pieces together. This step will help conceal raw edges if the joint is slightly off.
- Start from either the right or left side when setting the top molding in place. Determine the desired overhang to wall cabinetry and door overlay type. Molding is typically pulled so the bottom edge is flush with the door face, however, the final overhang can be set to the customer's preference. Use the same process for under cabinet molding installation.
- Using Starter Molding is recommended, although, scrap material may be used as mounting blocks as long as they are ***not*** exposed after installation is complete. Use construction adhesive.
- Side return moldings: Cabinets with decorative end panels applied should have the same overhang as the face. For cabinets that have flush end panels, an overhang of 1/4" is recommended.
- Brad nail and pin length will be determined by the molding thickness (1/2" to 2" should suffice). Starter Molding or mounting blocks can be screwed into place instead of using nails or pins (***Note***: Drilling pilot holes is required when using screws. Be sure to use the proper screw length–based on material thickness). Using wood glue at the joints is recommended.
- After installation is complete, use a fill stick and touch up pen to fill nail holes, fine-tune miter joints and repair other blemishes that may have occurred during the installation process. Wipe clean using a soft cotton cloth.

To add Molding Stacks in your 2020 Design, locate them in the Drag 'N Drop list under:
Moldings>Top Moldings>Pre-Stacked Moldings. To view the PDFs, right-click on a specific stack and go to specs.

Note: *Heavy, dark lines indicate finished surfaces.****Note:*** *Heavy, dark lines indicate finished surfaces.*

Angle Crown Molding

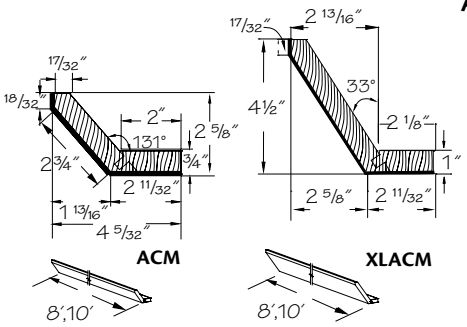

ACM8
ACM10

Extra Large
XLACM8
XLACM10

Remember to order "Furniture Ends" (FPEB) or a Wood Skin (WSK) for wall cabinets that will be at the end of a run when applying decorative moldings. This will result in a flush application on the return.

- Solid wood
- Angle Crown Molding (ACM) has foil-wrapped MDF and Extra Large Angle Crown Molding (XLACM) has painted hardwood supplied for White Thermofoil
- Painted hardwood supplied for EverCore™, Cream Thermofoil and 10' molding
- Plain sawn material supplied for Barnet Crafted door styles
- Will have rustic characteristics when ordered in rustic door styles
- The mounting cleat is finished but is ***not*** a matching wood species to the face
- The mounting cleat is ***not*** intended to be exposed after installation

❖	A
❖	B
❖	C
❖	E
❖	H
❖	TH
	HG
❖	WG
❖	M
❖	O
❖	QS

Angle Crown Molding–Face-Mount

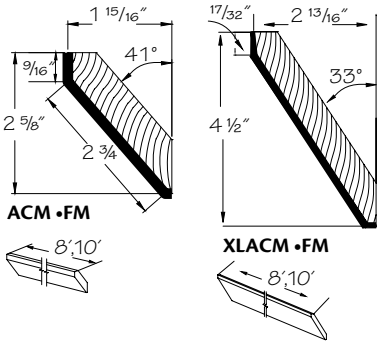

ACM8 •FM
ACM10 •FM

Extra Large
XLACM8 •FM
XLACM10 •FM

- Solid wood
- Painted hardwood supplied for EverCore™ and Thermofoil
- Painted or Stained hardwood supplied for Wood-Grain Foil door styles
- Will have rustic characteristics when ordered in rustic door styles

❖	A
❖	B
❖	C
❖	E
❖	H
❖	TH
	HG
❖	WG
❖	M
❖	O
❖	QS

Soffit Crown Molding

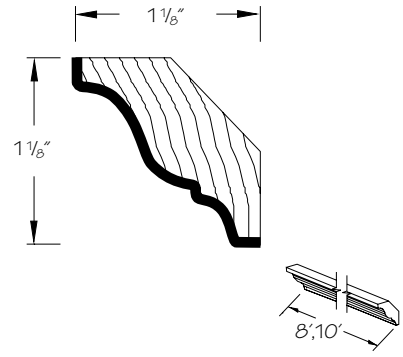

SCM8
SCM10

- Solid wood
- Foil-wrapped MDF supplied for White Thermofoil
- Painted hardwood supplied for EverCore™, Cream Thermofoil and 10' molding
- Painted or Stained hardwood supplied for Wood-Grain Foil door styles
- Crafted or Quartersawn door styles will be supplied in plain sawn wood

Remember to account for miter cuts and returns when choosing the amount of molding needed for a job.

❖	A
❖	B
❖	C
❖	E
❖	H
❖	TH
	HG
❖	WG
❖	M
❖	O
❖	QS

Crown Molding

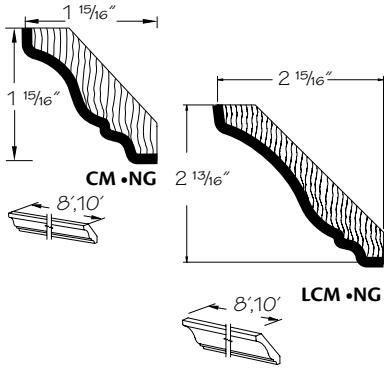

CM8 •NG
CM10 •NG

Large
LCM8 •NG
LCM10 •NG

- Solid wood
- Crown Molding (CM8) has foil wrapped MDF supplied for Thermofoils and painted hardwood supplied for EverCore™
- Large Crown Molding (LCM8 and LCM10) and Crown Molding (CM10) is painted hardwood supplied for EverCore™ and Cream Thermofoil
- Painted or Stained hardwood supplied for Wood-Grain Foil door styles
- Crafted or Quartersawn door styles will be supplied in plain sawn wood
- Will have rustic characteristics when ordered in rustic door styles

❖	A
❖	B
❖	C
❖	E
❖	H
❖	TH
	HG
❖	WG
❖	M
❖	O
❖	QS

Crown Molding w/Molding Mounting Strip

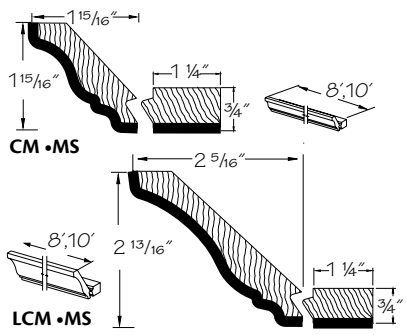

CM8 •MS
CM10 •MS

Large
LCM8 •MS
LCM10 •MS

- Solid wood
- Painted hardwood supplied for EverCore™
- Painted or Stained hardwood supplied for Wood-Grain Foil door styles
- Crafted or Quartersawn door styles will be supplied in plain sawn wood
- Will have rustic characteristics when ordered in rustic door styles
- Mounting strip may be installed first, allowing for easier alignment and quicker installation of grooved moldings
- Shipped as two pieces

❖	A
❖	B
❖	C
❖	E
❖	H
	TH
	HG
❖	WG
❖	M
❖	O
❖	QS

Note: *Heavy, dark lines indicate finished surfaces.*

Classic Crown Molding

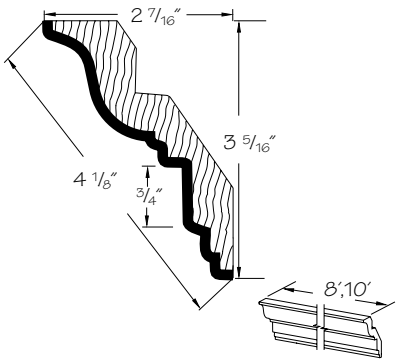

CCM8 ▪NG
CCM10 ▪NG

- Solid wood
- Foil-wrapped MDF supplied for White Thermofoil
- Painted hardwood supplied for EverCore™, Cream Thermofoil and 10' molding
- Painted or Stained hardwood supplied for Wood-Grain Foil door styles
- Crafted or Quartersawn door styles will be supplied in plain sawn wood
- Will have rustic characteristics when ordered in rustic door styles

❖	A
❖	B
❖	C
❖	E
❖	H
❖	TH
	HG
❖	WG
❖	M
❖	O
❖	QS

Use caution when applying Classic Crown Molding (CCM8), Crown Molding (CM8), etc., when "stair stepping" wall cabinets in full overlay door styles otherwise the doors may hit the molding while opening.

Classic Crown Molding w/Molding Mounting Strip

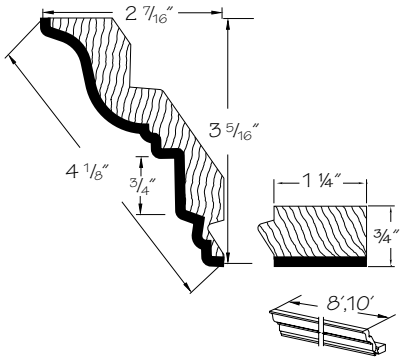

CCM8 ▪MS
CCM10 ▪MS

- Solid wood
- Painted hardwood supplied for EverCore™
- Painted or Stained hardwood supplied for Wood-Grain Foil door styles
- Crafted or Quartersawn door styles will be supplied in plain sawn wood
- Will have rustic characteristics when ordered in rustic door styles
- Mounting strip may be installed first, allowing for easier alignment and quicker installation of grooved moldings
- Shipped as two pieces

❖	A
❖	B
❖	C
❖	E
❖	H
	TH
	HG
❖	WG
❖	M
❖	O
❖	QS

Empire Crown Molding

New

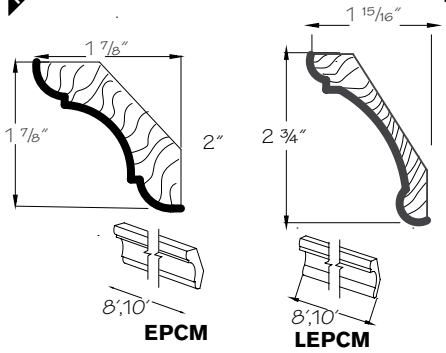

EPCM8
EPCM10
Large
LEPCM8
LEPCM10

Grey color coding indicates new product, size or code.

- Solid wood
- Painted hardwood supplied for EverCore™ and Cream Thermofoil
- Painted or Stained hardwood supplied for Wood-Grain Foil door styles
- Crafted or Quartersawn door styles will be supplied in plain sawn wood

❖	A
❖	B
❖	C
❖	E
❖	H
❖	TH
	HG
❖	WG
❖	M
❖	O
❖	QS

Sterling Crown Molding

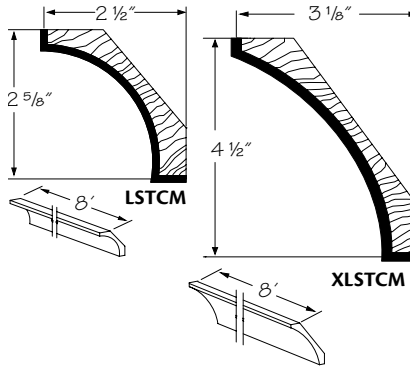

Large
LSTCM8
Extra Large
XLSTCM8

- Solid wood
- Painted hardwood supplied for EverCore™ and Thermofoil
- ☆ Painted hardwood supplied for Wood-Grain Foil door styles; only available in white

❖	A
	B
❖	C
❖	E
	H
❖	TH
	HG
☆	WG
❖	M
	O
	QS

The Sterling Collection design combines automated wood-machining processes with hand detailing. Because of the hand detailing, slight imperfection and/or differences may exist from part to part and are normal. These do ***not*** affect the structural performance of the product but enhance the aesthetics of each piece.

Note: *Heavy, dark lines indicate finished surfaces.*

Cove Molding

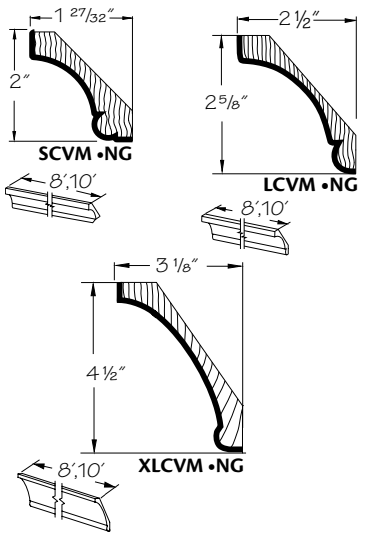

Small

SCVM8 ▪NG

SCVM10 ▪NG

Large

LCVM8 ▪NG

LCVM10 ▪NG

Extra Large

XLCVM8 ▪NG

XLCVM10 ▪NG

- Solid wood
- Painted hardwood supplied for EverCore™, Cream Thermofoil and 10′ molding, except for Small Cove Molding (SCVM8) and Large Cove Molding (LCVM8), which will have foil-wrapped MDF supplied for White Thermofoil
- Painted or Stained hardwood supplied for Wood-Grain Foil door styles
- Crafted or Quartersawn door styles will be supplied in plain sawn wood

❖	A
❖	B
❖	C
❖	E
❖	H
❖	TH
	HG
❖	WG
❖	M
❖	O
❖	QS

Cove Molding w/Molding Mounting Strip

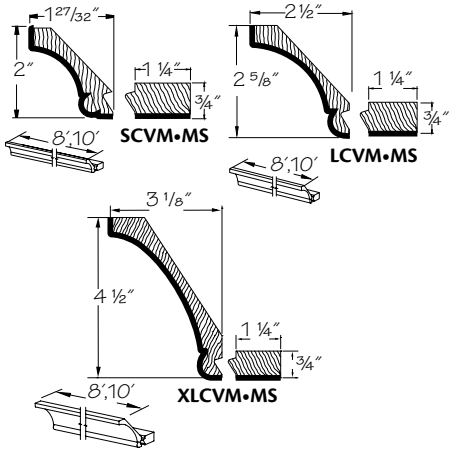

Small

SCVM8 ▪MS

SCVM10 ▪MS

Large

LCVM8 ▪MS

LCVM10 ▪MS

Extra Large

XLCVM8 ▪MS

XLCVM10 ▪MS

- Solid wood
- Painted hardwood supplied for EverCore™
- Painted or Stained hardwood supplied for Wood-Grain Foil door styles
- Crafted or Quartersawn door styles will be supplied in plain sawn wood
- Mounting strip may be installed first, allowing for easier alignment and quicker installation of grooved moldings
- Shipped as two pieces

❖	A
❖	B
❖	C
❖	E
❖	H
	TH
	HG
❖	WG
❖	M
❖	O
❖	QS

Molding Mounting Strip

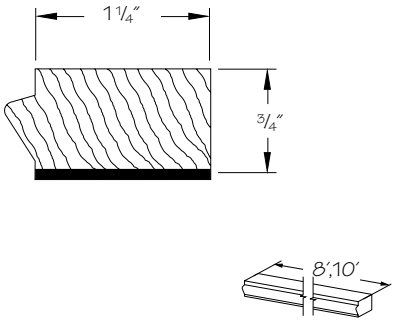

MS8

MS10

- Solid wood
- Painted hardwood supplied for EverCore™
- Painted or Stained hardwood supplied for Wood-Grain Foil door styles
- Crafted or Quartersawn door styles will be supplied in plain sawn wood
- Mounting strip may be installed first, allowing for easier alignment and quicker installation of grooved moldings
- Works with all Cove and Crown combination molding and mounting strips

❖	A
❖	B
❖	C
❖	E
❖	H
	TH
	HG
❖	WG
❖	M
❖	O
❖	QS

Note: *Heavy, dark lines indicate finished surfaces.*

Federal Molding

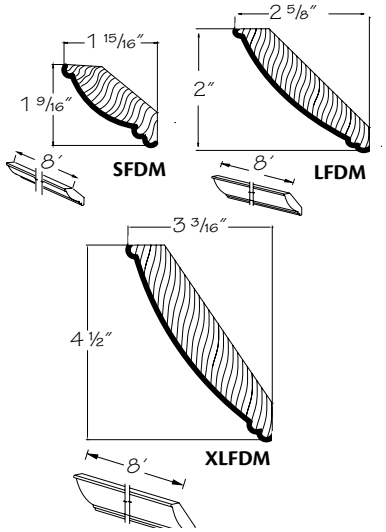

Small
SFDM8
Large
LFDM8
Extra Large
XLFDM8

- Solid wood
- Can be installed with double bead on top or bottom
- Painted hardwood supplied for EverCore™ and Thermofoil
- ☆ Painted hardwood supplied for Wood-Grain Foil door styles; only available in white

❖	A
	B
❖	C
❖	E
	H
❖	TH
	HG
☆	WG
❖	M
	O
	QS

New

Floating Shelf Molding - Cove & Sterling

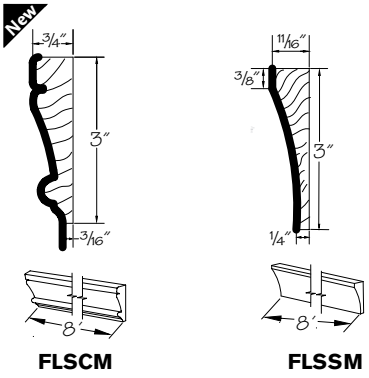

Cove
FLSCM8
Sterling
FLSSM8

Grey color coding indicates new product, size or code.

- Solid wood
- Painted hardwood supplied for EverCore™ and Thermofoil
- Painted or Stained hardwood supplied for Wood-Grain Foil door styles

Floating Shelf Moldings can also be used in applications around window and door frames

	A
❖	B
❖	C
❖	E
❖	H
❖	TH
	HG
❖	WG
❖	M
❖	O
	QS

Contemporary Wood Crown

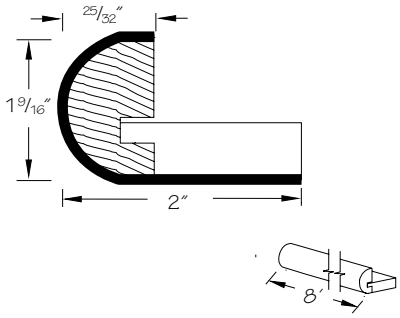

CWC8

- Solid wood
- Painted hardwood supplied for EverCore™ and Thermofoil
- Painted or Stained hardwood supplied for Wood-Grain Foil door styles
- Crafted or Quartersawn door styles will be supplied in plain sawn wood

	A
❖	B
❖	C
❖	E
❖	H
❖	TH
	HG
❖	WG
❖	M
❖	O
❖	QS

Starter Trim

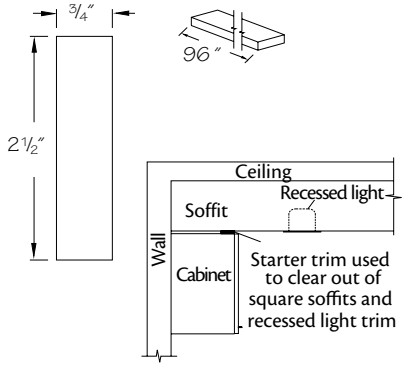

ST8

- 3/4″ melamine
- Edgebanded one long edge
- ☆ Only available in White and Cream Thermofoil door styles

	A
	B
	C
	E
	H
☆	TH
	HG
	WG
	M
	O
	QS

Note: *Heavy, dark lines indicate finished surfaces.*

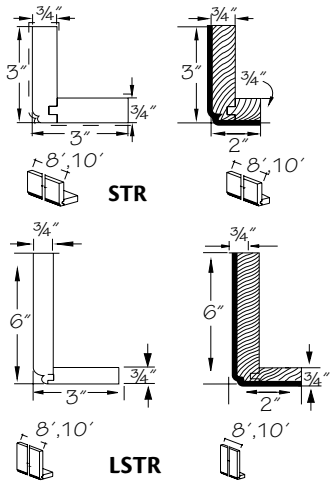

Starter Molding

STR8
STR10
Large
LSTR8
LSTR10

- Solid wood
- Painted hardwood supplied for EverCore™ and Thermofoil, except for Starter Molding (STR8) is foil-wrapped MDF supplied for White Thermofoil
- Painted or Stained hardwood supplied for Wood-Grain Foil door styles
- Crafted or Quartersawn door styles will be supplied in plain sawn wood
- Will have rustic characteristics when ordered in rustic door styles

❖	A
❖	B
❖	C
	E
❖	H
❖	TH
	HG
❖	WG
❖	M
❖	O
❖	QS

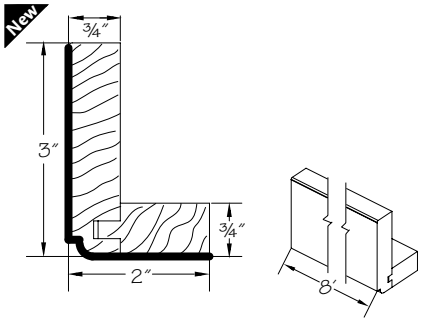

Empire Starter Molding

EPSTR8

Grey color coding indicates new product, size or code.

- Solid wood
- Painted hardwood supplied for EverCore™ and Cream Thermofoil
- Painted or Stained hardwood supplied for Wood-Grain Foil door styles
- Crafted or Quartersawn door styles will be supplied in plain sawn wood

❖	A
❖	B
❖	C
❖	E
❖	H
❖	TH
	HG
❖	WG
❖	M
❖	O
❖	QS

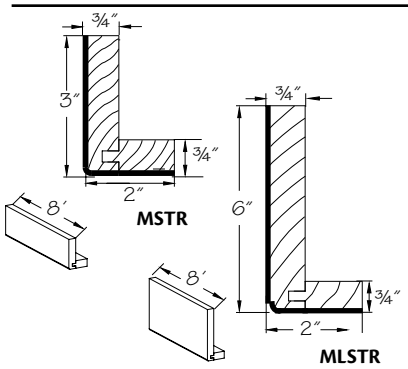

Mission Starter Molding

MSTR8
Large
MLSTR8

- Solid wood
- Painted hardwood supplied for EverCore™
- Plain sawn material supplied for Barnet Crafted Cherry and Maple door styles. Quartersawn Oak supplied for Barnet Crafted Oak door styles

☆ Painted hardwood supplied for Wood-Grain Foil door styles; only available in white

❖	A
❖	B
❖	C
❖	E
❖	H
	TH
	HG
☆	WG
❖	M
❖	O
❖	QS

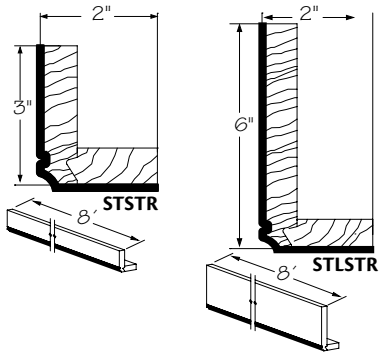

Sterling Starter Molding

STSTR8
Large
STLSTR8

- Solid wood
- Painted hardwood supplied for EverCore™ and Thermofoil

☆ Painted hardwood supplied for Wood-Grain Foil door styles; only available in white

The Sterling Collection design combines automated wood-machining processes with hand detailing. Because of the hand detailing, slight imperfection and/or differences may exist from part to part and are normal. These do ***not*** affect the structural performance of the product but enhance the aesthetics of each piece.

❖	A
	B
❖	C
❖	E
	H
❖	TH
	HG
☆	WG
❖	M
	O
	QS

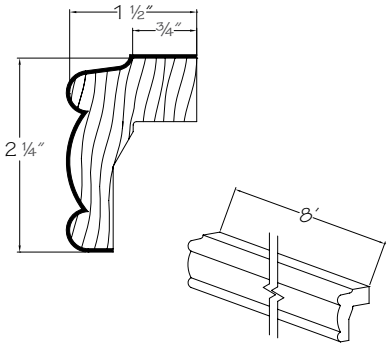

Traditional Light Rail

TLR8

- Solid wood
- Painted hardwood supplied for EverCore™ and Thermofoil
- Painted or Stained hardwood supplied for Wood-Grain Foil door styles
- Crafted or Quartersawn door styles will be supplied in plain sawn wood
- Groove accepts LED tape lighting
- Foils do ***not*** have groove

❖	A
❖	B
❖	C
❖	E
❖	H
❖	TH
	HG
❖	WG
❖	M
❖	O
❖	QS

Note: *Heavy, dark lines indicate finished surfaces.*

Beaded Light Rail

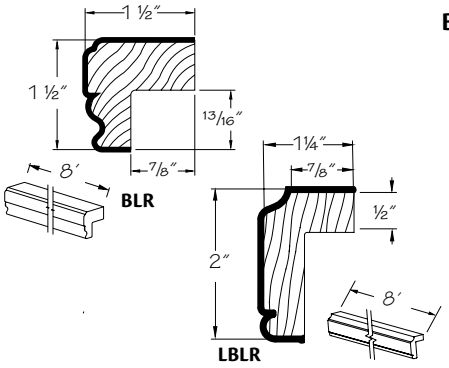

BLR8

Large

LBLR8

- Solid wood
- Painted hardwood supplied for EverCore™ and Thermofoil
- Painted or Stained hardwood supplied for Wood-Grain Foil door styles
- Crafted or Quartersawn door styles will be supplied in plain sawn wood

❖	A
❖	B
❖	C
❖	E
❖	H
❖	TH
	HG
❖	WG
❖	M
❖	O
❖	QS

Cove Light Rail

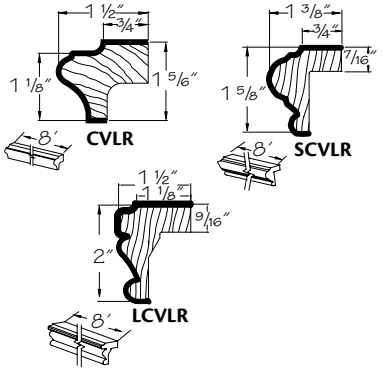

CVLR8

Small

SCVLR8

Large

❊ **LCVLR8**

❊ Groove accepts LED tape lighting

- Solid wood
- Painted hardwood supplied for EverCore™ and Cream Thermofoil, except for Cove Light Rail (CVLR8), which is foil-wrapped MDF supplied for White Thermofoil
- Painted or Stained hardwood supplied for Wood-Grain Foil door styles
- Crafted or Quartersawn door styles will be supplied in plain sawn wood

❖	A
❖	B
❖	C
❖	E
❖	H
❖	TH
	HG
❖	WG
❖	M
❖	O
❖	QS

Empire Light Rail

New

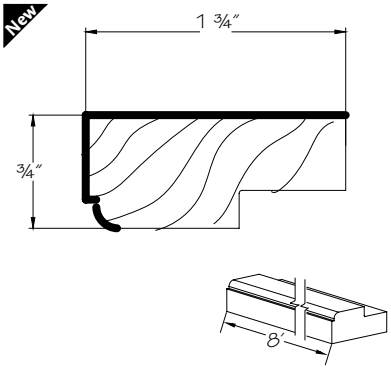

EPLR8

Grey color coding indicates new product, size or code.

- Solid wood
- Painted hardwood supplied for EverCore™ and Cream Thermofoil
- Painted or Stained hardwood supplied for Wood-Grain Foil door styles
- Crafted or Quartersawn door styles will be supplied in plain sawn wood

❖	A
❖	B
❖	C
❖	E
❖	H
❖	TH
	HG
❖	WG
❖	M
❖	O
❖	QS

Inset Light Rail

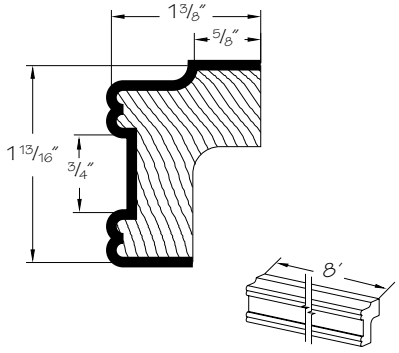

ILR8

- Solid wood
- Allows application of 3/4″ inserts
- Painted hardwood supplied for EverCore™ and Thermofoil
- Painted or Stained hardwood supplied for Wood-Grain Foil door styles
- Crafted or Quartersawn door styles will be supplied in plain sawn wood

❖	A
❖	B
❖	C
❖	E
❖	H
❖	TH
	HG
❖	WG
❖	M
❖	O
❖	QS

Mission Light Rail

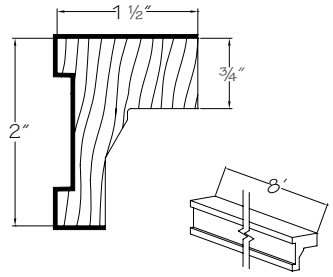

MLR8

- Solid wood
- Painted hardwood supplied for EverCore™ and Thermofoil
- Painted or Stained hardwood supplied for Wood-Grain Foil door styles
- Groove accepts LED tape lighting

❖	A
❖	B
❖	C
❖	E
❖	H
❖	TH
	HG
❖	WG
❖	M
❖	O
❖	QS

Note: *Heavy, dark lines indicate finished surfaces.*

Sterling Light Rail

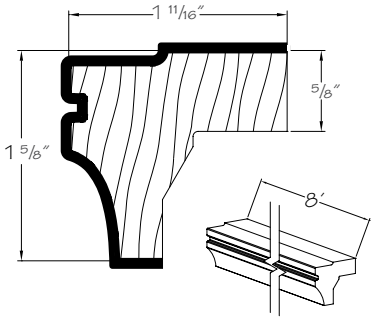

STLR8

- Solid wood
- Painted hardwood supplied for EverCore™ and Thermofoil
- ☆ Painted hardwood supplied for Wood-Grain Foil door styles; only available in white
- Groove accepts LED tape lighting

❖	A
	B
❖	C
❖	E
	H
❖	TH
	HG
☆	WG
❖	M
	O
	QS

The Sterling Collection design combines automated wood-machining processes with hand detailing. Because of the hand detailing, slight imperfection and/or differences may exist from part to part and are normal. These do ***not*** affect the structural performance of the product but enhance the aesthetics of each piece.

Batten Molding

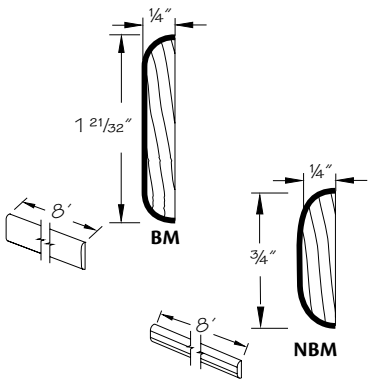

BM8

Narrow

NBM8

- Solid wood
- Painted hardwood supplied for EverCore™ and Thermofoil
- Painted or Stained hardwood supplied for Wood-Grain Foil door styles
- Crafted or Quartersawn door styles will be supplied in plain sawn wood

❖	A
❖	B
❖	C
❖	E
❖	H
❖	TH
	HG
❖	WG
❖	M
❖	O
❖	QS

Mission Batten Molding

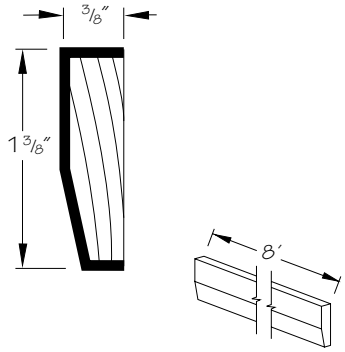

MBM8

- Solid wood
- Painted hardwood supplied for EverCore™
- Plain sawn material supplied for Barnet Crafted Cherry and Maple door styles. Quartersawn Oak supplied for Barnet Crafted Oak door styles
- ☆ Painted hardwood supplied for Wood-Grain Foil door styles; only available in white

❖	A
❖	B
❖	C
❖	E
❖	H
	TH
	HG
☆	WG
❖	M
❖	O
❖	QS

Beaded Panel Molding

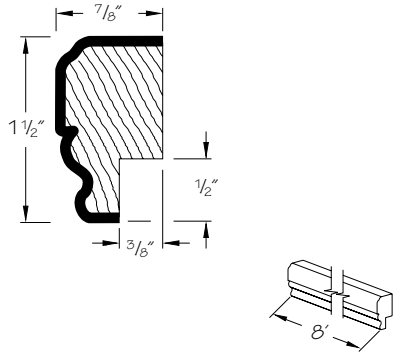

BPM8

- Solid wood
- Painted hardwood supplied for EverCore™ and Thermofoil
- Painted or Stained hardwood supplied for Wood-Grain Foil door styles
- Crafted or Quartersawn door styles will be supplied in plain sawn wood

❖	A
❖	B
❖	C
❖	E
❖	H
❖	TH
	HG
❖	WG
❖	M
❖	O
❖	QS

Shaped Molding

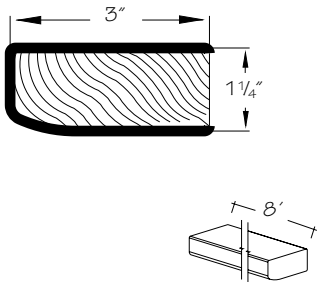

SHM8

- Solid wood
- Painted hardwood supplied for EverCore™ and Thermofoil
- Painted or Stained hardwood supplied for Wood-Grain Foil door styles
- Crafted or Quartersawn door styles will be supplied in plain sawn wood

	A
❖	B
❖	C
❖	E
❖	H
❖	TH
	HG
❖	WG
❖	M
❖	O
❖	QS

Note: *Heavy, dark lines indicate finished surfaces.*

Cabinet Panel Edge

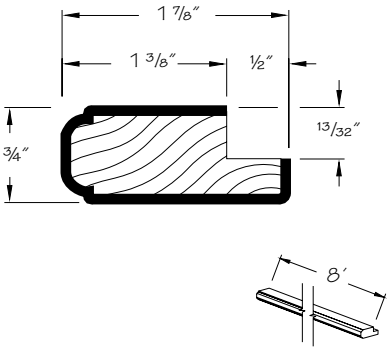

CPE8

- Solid wood
- Painted hardwood supplied for EverCore™ and Thermofoil
- Painted or Stained hardwood supplied for Wood-Grain Foil door styles
- Crafted or Quartersawn door styles will be supplied in plain sawn wood



Remember to account for miter cuts and returns when choosing the amount of molding needed for a job.

❖	A
❖	B
❖	C
❖	E
❖	H
❖	TH
	HG
❖	WG
❖	M
❖	O
❖	QS

Dentil Edging

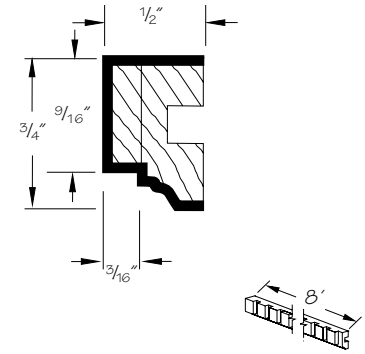

DE8

- Solid wood
- Painted hardwood supplied for EverCore™ and Thermofoil
- Painted or Stained hardwood supplied for Wood-Grain Foil door styles
- Crafted or Quartersawn door styles will be supplied in plain sawn wood

	A
❖	B
❖	C
❖	E
❖	H
❖	TH
	HG
❖	WG
❖	M
❖	O
❖	QS

Ogee Edging

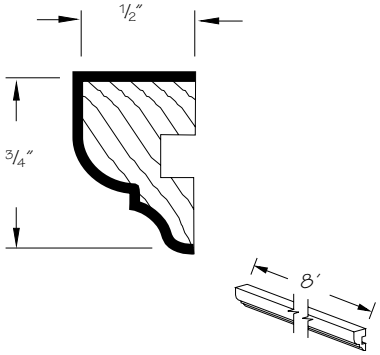

OGE8

- Solid wood
- Painted hardwood supplied for EverCore™ and Thermofoil
- Painted or Stained hardwood supplied for Wood-Grain Foil door styles
- Crafted or Quartersawn door styles will be supplied in plain sawn wood

❖	A
❖	B
❖	C
❖	E
❖	H
❖	TH
	HG
❖	WG
❖	M
❖	O
❖	QS

Mirror Molding

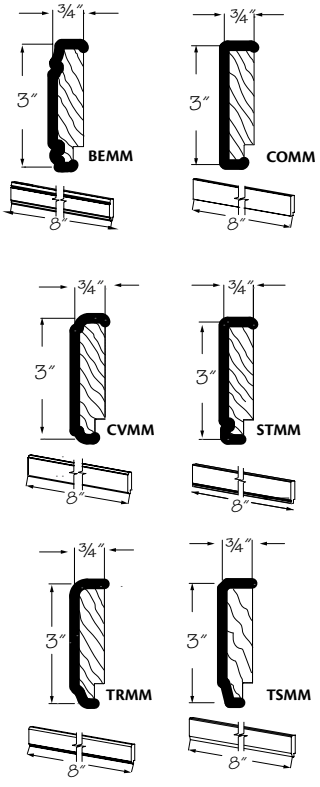

Beaded
BEMM8
Contemporary
COMM8
Cove
CVMM8
Sterling
STMM8
Traditional
TRMM8
Transitional
TSMM8

- Solid wood
- Painted hardwood supplied for EverCore™ and Thermofoil
- Foil-wrapped MDF supplied for Wood-Grain Foil door styles
- Crafted or Quartersawn door styles will be supplied in plain sawn wood

❖	A
❖	B
❖	C
❖	E
❖	H
❖	TH
	HG
❖	WG
❖	M
❖	O
❖	QS

Note: *Heavy, dark lines indicate finished surfaces.*

Corner Molding

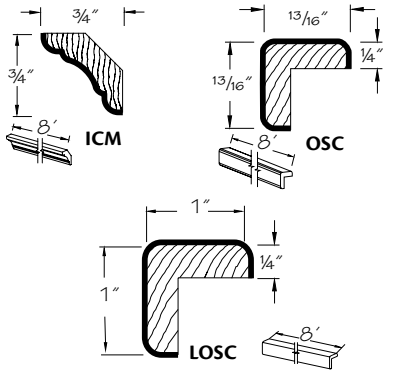

Inside

ICM8

Outside

OSC8

Large Outside

LOSC8

- Solid wood
- Painted hardwood supplied for EverCore™ and Thermofoil, except for Outside Corner Molding (OSC8) which is foil-wrapped MDF supplied for Thermofoils
- Painted or Stained hardwood supplied for Wood-Grain Foil door styles
- Crafted or Quartersawn door styles will be supplied in plain sawn wood
- OSC8 is 1″ x 1″ when ordered in Foil doors styles

❖	A
❖	B
❖	C
❖	E
❖	H
❖	TH
	HG
❖	WG
❖	M
❖	O
❖	QS

Mission Outside Corner

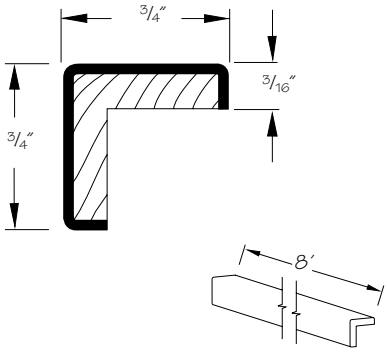

MOSC8

- Solid wood
- Painted hardwood supplied for EverCore™
- Painted or Stained hardwood supplied for Wood-Grain Foil door styles

❖	A
❖	B
❖	C
❖	E
❖	H
	TH
	HG
❖	WG
❖	M
❖	O
❖	QS

Angled Corner Molding

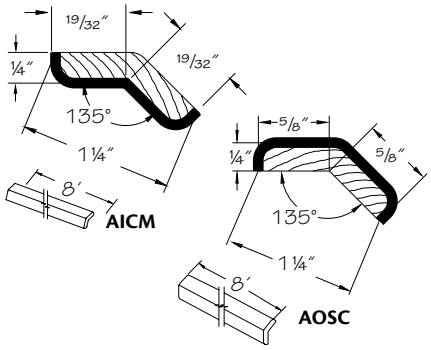

Inside

AICM8

Outside

AOSC8

- Solid wood
- Painted hardwood supplied for EverCore™ and Thermofoil
- Painted or Stained hardwood supplied for Wood-Grain Foil door styles
- Crafted or Quartersawn door styles will be supplied in plain sawn wood

❖	A
❖	B
❖	C
❖	E
❖	H
❖	TH
	HG
❖	WG
❖	M
❖	O
❖	QS

Quarter Round Molding

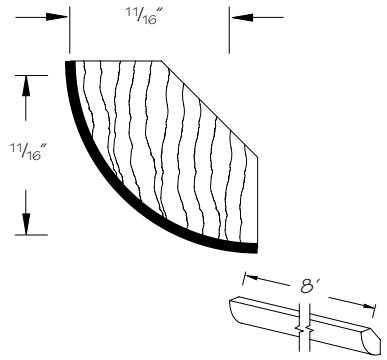

QR8

- Solid wood
- Foil-wrapped MDF supplied for White Thermofoil
- Painted hardwood supplied for EverCore™ and Cream Thermofoil
- Painted or Stained hardwood supplied for Wood-Grain Foil door styles
- Crafted or Quartersawn door styles will be supplied in plain sawn wood

❖	A
❖	B
❖	C
❖	E
❖	H
❖	TH
	HG
❖	WG
❖	M
❖	O
❖	QS

Apply Quarter Round molding (QR8) at the base of Matching Toe Kicks or Wood Matching Toe Kicks (MTK8 or WMTK8) for a nice, finished look.

Rope Molding

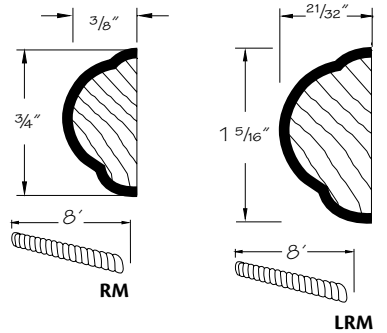

▲ **RM8**

Large

❄✢**LRM8**

▲ Oak supplied for Hickory

❄ ***Not*** available in Rustic Alder door styles

✢ Apply with small brad

- Solid wood
- Painted hardwood supplied for EverCore™ and Thermofoil
- Painted or Stained hardwood supplied for Wood-Grain Foil door styles
- Crafted or Quartersawn door styles will be supplied in plain sawn wood
- Component will ***not*** contain rustic characteristics when ordered in a rustic door style

☆	A
❖	B
❖	C
❖	E
❖	H
❖	TH
	HG
❖	WG
❖	M
❖	O
❖	QS

Applying Rope Molding (RM8) or Dentil Edging (DE8) to the inlay of Classic Crown Molding (CCM8) before making cuts will enable you to condense two cuts into one.

Note: *Heavy, dark lines indicate finished surfaces.*

Ribbon Twist Molding

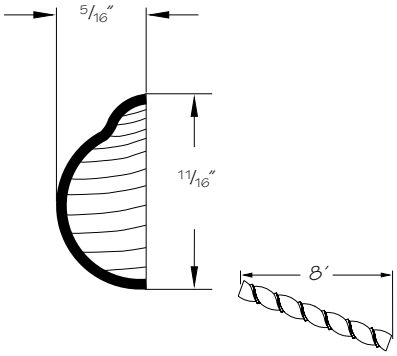

RTM8

- Solid wood
- Carved
- Painted hardwood supplied for EverCore™ and Thermofoil
- Painted or Stained hardwood supplied for Wood-Grain Foil door styles
- Beech supplied for Hickory, Oak and quartersawn Oak
- Maple supplied for Birch
- Component will ***not*** contain rustic characteristics when ordered in a rustic door style

❖	A
❖	B
❖	C
❖	E
❖	H
❖	TH
	HG
❖	WG
❖	M
❖	O
❖	QS

Bead Edging

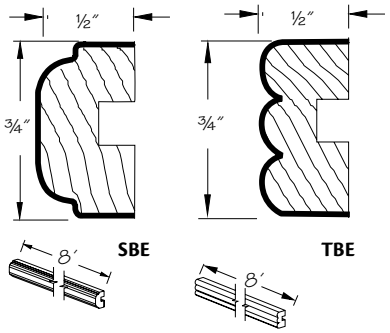

Single

SBE8

Triple

TBE8

- Solid wood
- Painted hardwood supplied for EverCore™ and Thermofoil
- Painted or Stained hardwood supplied for Wood-Grain Foil door styles
- Crafted or Quartersawn door styles will be supplied in plain sawn wood

❖	A
❖	B
❖	C
❖	E
❖	H
❖	TH
	HG
❖	WG
❖	M
❖	O
❖	QS

Mission Single Bead Edging

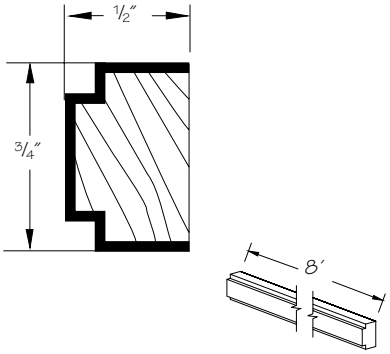

MSBE8

- Solid wood
- Painted hardwood supplied for EverCore™
- Plain sawn material supplied for Barnet Crafted Cherry and Maple door styles. Quartersawn Oak supplied for Barnet Crafted Oak door styles
- ☆ Painted hardwood supplied for Wood-Grain Foil door styles; only available in white

❖	A
❖	B
❖	C
❖	E
❖	H
	TH
	HG
☆	WG
❖	M
❖	O
❖	QS

Mission Scribe Molding

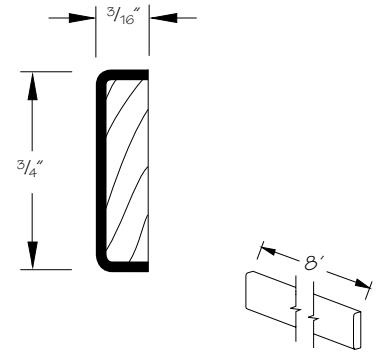

MSM8

- Solid wood
- Painted hardwood supplied for EverCore™
- Plain sawn material supplied for Barnet Crafted Cherry and Maple door styles. Quartersawn Oak supplied for Barnet Crafted Oak door styles
- ☆ Painted hardwood supplied for Wood-Grain Foil door styles; only available in white

❖	A
❖	B
❖	C
❖	E
❖	H
	TH
	HG
☆	WG
❖	M
❖	O
❖	QS

Scribe Molding

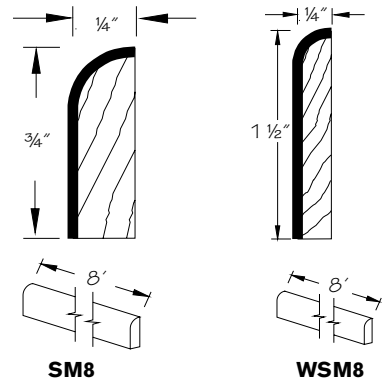

SM8

Wide Scribe

WSM8

Grey color coding indicates new product, size or code.

- Solid wood
- Foils are foil wrapped MDF
- Painted hardwood supplied for EverCore™
- Crafted or Quartersawn door styles will be supplied in plain sawn wood

Let your customers know if they have left-over pieces of Scribe Molding (SM8) to consider using them to finish the ends of exposed matching toe kick.

❖	A
❖	B
❖	C
❖	E
❖	H
❖	TH
	HG
❖	WG
❖	M
❖	O
❖	QS

Note: *Heavy, dark lines indicate finished surfaces.*

Shoe Molding

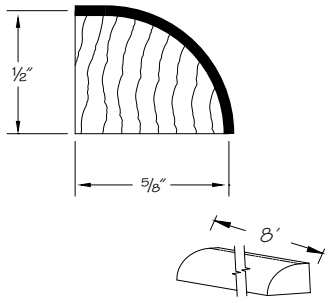

SHO8

- Solid wood
- Painted hardwood supplied for EverCore™ and Thermofoil
- Painted or Stained hardwood supplied for Wood-Grain Foil door styles
- Crafted or Quartersawn door styles will be supplied in plain sawn wood

❖	A
❖	B
❖	C
❖	E
❖	H
❖	TH
	HG
❖	WG
❖	M
❖	O
❖	QS

Contemporary Wood Edge

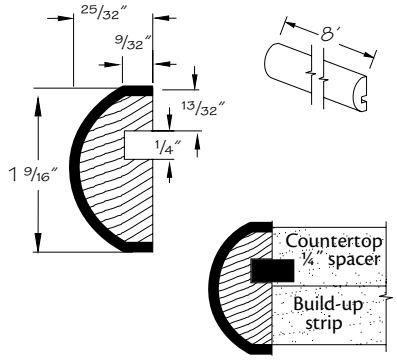

CWE8

- Solid wood
- Painted hardwood supplied for EverCore™ and Thermofoil
- Painted or Stained hardwood supplied for Wood-Grain Foil door styles
- Crafted or Quartersawn door styles will be supplied in plain sawn wood

	A
❖	B
❖	C
❖	E
❖	H
❖	TH
	HG
❖	WG
❖	M
❖	O
❖	QS

Angled Wood Edge

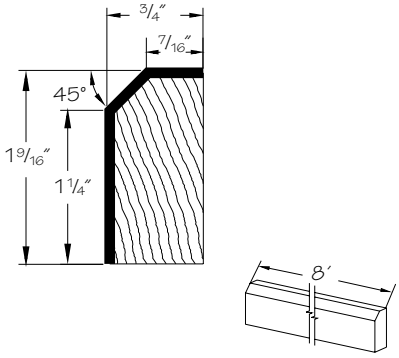

AWE8

- Solid wood
- Painted hardwood supplied for EverCore™ and Thermofoil
- Painted or Stained hardwood supplied for Wood-Grain Foil door styles
- Crafted or Quartersawn door styles will be supplied in plain sawn wood

❖	A
❖	B
❖	C
❖	E
❖	H
❖	TH
	HG
❖	WG
❖	M
❖	O
❖	QS

Mission Flat Wood Edge

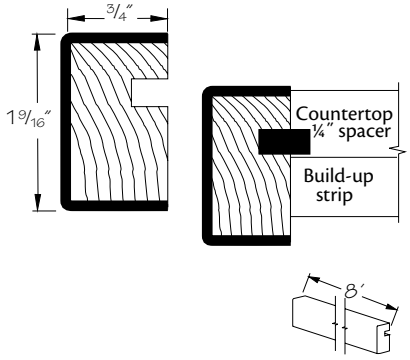

MFWE8

- Solid wood
- Painted hardwood supplied for EverCore™
- Plain sawn material supplied for Barnet Crafted Cherry and Maple door styles. Quartersawn Oak supplied for Barnet Crafted Oak door styles

☆ Painted hardwood supplied for Wood-Grain Foil door styles; only available in white

❖	A
❖	B
❖	C
❖	E
❖	H
	TH
	HG
☆	WG
❖	M
❖	O
❖	QS

Mission Single Bead Wood Edge

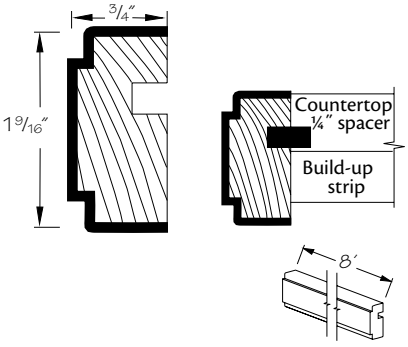

MSBWE8

- Solid wood
- Painted hardwood supplied for EverCore™
- Plain sawn material supplied for Barnet Crafted Cherry and Maple door styles. Quartersawn Oak supplied for Barnet Crafted Oak door styles

☆ Painted hardwood supplied for Wood-Grain Foil door styles; only available in white

❖	A
❖	B
❖	C
❖	E
❖	H
	TH
	HG
☆	WG
❖	M
❖	O
❖	QS

Note: *Heavy, dark lines indicate finished surfaces.*

Traditional Wood Edge

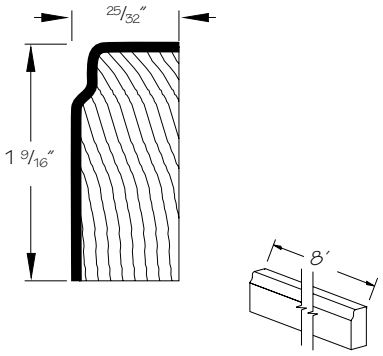

TWE8

- Solid wood
- Painted hardwood supplied for EverCore™ and Thermofoil
- Painted or Stained hardwood supplied for Wood-Grain Foil door styles
- Crafted or Quartersawn door styles will be supplied in plain sawn wood

❖	A
❖	B
❖	C
❖	E
❖	H
❖	TH
	HG
❖	WG
❖	M
❖	O
❖	QS

When using wood edge molding to trim a countertop, be sure to seal the back edge of the molding prior to installing the edge to the top. This will help prevent moisture from entering the molding and damaging it.

Dentil Molding

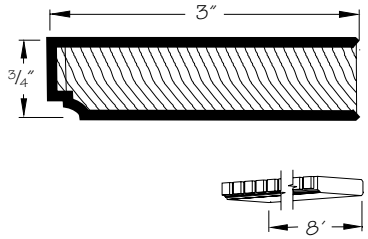

DM8

- Solid wood
- Painted hardwood supplied for EverCore™ and Thermofoil
- Painted or Stained hardwood supplied for Wood-Grain Foil door styles
- Crafted or Quartersawn door styles will be supplied in plain sawn wood

	A
❖	B
❖	C
❖	E
❖	H
❖	TH
	HG
❖	WG
❖	M
❖	O
❖	QS

Ogee Molding

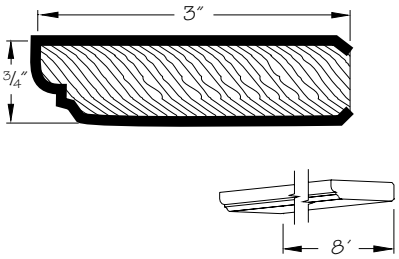

OGM8

- Solid wood
- Painted hardwood supplied for EverCore™ and Thermofoil
- Painted or Stained hardwood supplied for Wood-Grain Foil door styles
- Crafted or Quartersawn door styles will be supplied in plain sawn wood

❖	A
❖	B
❖	C
❖	E
❖	H
❖	TH
	HG
❖	WG
❖	M
❖	O
❖	QS

Ogee Pilaster

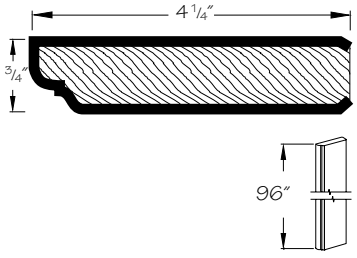

OGP8

- Solid wood
- Foil-wrapped MDF supplied for White Thermofoil
- Painted hardwood supplied for EverCore™ and Cream Thermofoil
- Painted or Stained hardwood supplied for Wood-Grain Foil door styles
- Crafted or Quartersawn door styles will be supplied in plain sawn wood

❖	A
❖	B
❖	C
❖	E
❖	H
❖	TH
	HG
❖	WG
❖	M
❖	O
❖	QS

Bead Molding

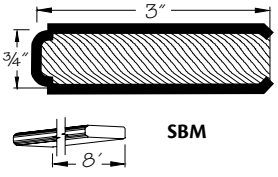

SBM

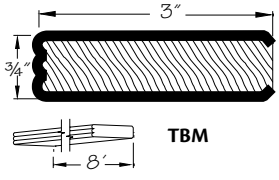

TBM

Single
SBM8
Triple
TBM8

- Solid wood
- Painted hardwood supplied for EverCore™ and Thermofoil, except for Single Bead Molding (SBM8) which is foil-wrapped MDF supplied for White Thermofoils
- Painted or Stained hardwood supplied for Wood-Grain Foil door styles
- Crafted or Quartersawn door styles will be supplied in plain sawn wood

❖	A
❖	B
❖	C
❖	E
❖	H
❖	TH
	HG
❖	WG
❖	M
❖	O
❖	QS

Note: *Heavy, dark lines indicate finished surfaces.*

Mission Single Bead Molding

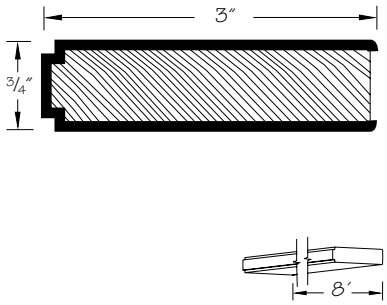

MSBM8

- Solid wood
- Painted hardwood supplied for EverCore™
- Plain sawn material supplied for Barnet Crafted Cherry and Maple door styles. Quartersawn Oak supplied for Barnet Crafted Oak door styles
- ☆ Painted hardwood supplied for Wood-Grain Foil door styles; only available in white

❖	A
❖	B
❖	C
❖	E
❖	H
	TH
	HG
☆	WG
❖	M
❖	O
❖	QS

Bead Pilaster

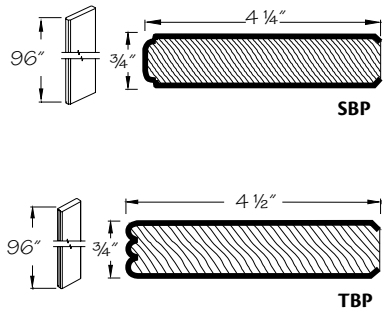

Single Bead
SBP8
Triple Bead
TBP8

- Solid wood
- Painted hardwood supplied for EverCore™ and Thermofoil
- Painted or Stained hardwood supplied for Wood-Grain Foil door styles
- Crafted or Quartersawn door styles will be supplied in plain sawn wood

❖	A
❖	B
❖	C
❖	E
❖	H
❖	TH
	HG
❖	WG
❖	M
❖	O
❖	QS

Mission Single Bead Pilaster

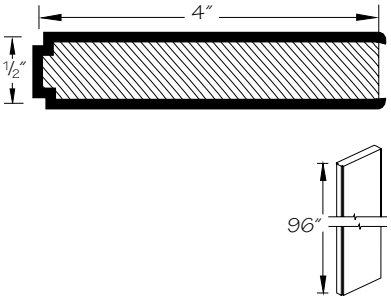

MSBP8

- Solid wood
- Painted hardwood supplied for EverCore™
- Plain sawn material supplied for Barnet Crafted Cherry and Maple door styles. Quartersawn Oak supplied for Barnet Crafted Oak door styles
- ☆ Painted hardwood supplied for Wood-Grain Foil door styles; only available in white

❖	A
❖	B
❖	C
❖	E
❖	H
	TH
	HG
☆	WG
❖	M
❖	O
❖	QS

Cove Base Board Extended

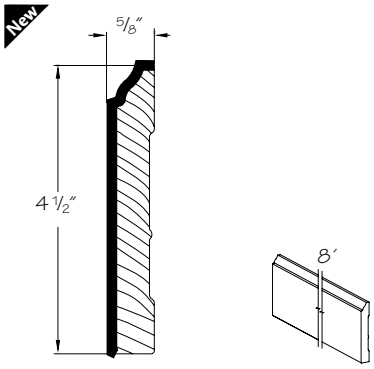

CVBBE8

Grey color coding indicates new product, size or code.

- Solid wood
- Foil-wrapped MDF supplied for White Thermofoil
- Painted hardwood supplied for EverCore™ and Cream Thermofoil
- Painted or Stained hardwood supplied for Wood-Grain Foil door styles
- Crafted or Quartersawn door styles will be supplied in plain sawn wood

❖	A
❖	B
❖	C
❖	E
❖	H
❖	TH
	HG
❖	WG
❖	M
❖	O
❖	QS

Stack Molding

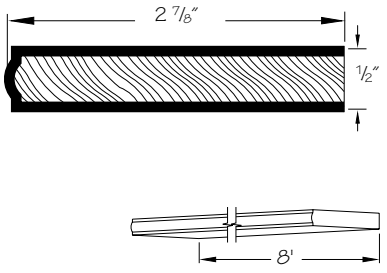

STM8

- Solid wood
- Painted hardwood supplied for EverCore™ and Thermofoil
- Painted or Stained hardwood supplied for Wood-Grain Foil door styles
- Crafted or Quartersawn door styles will be supplied in plain sawn wood

❖	A
❖	B
❖	C
❖	E
❖	H
❖	TH
	HG
❖	WG
❖	M
❖	O
❖	QS

Note: *Heavy, dark lines indicate finished surfaces.*

Wide Dentil Molding

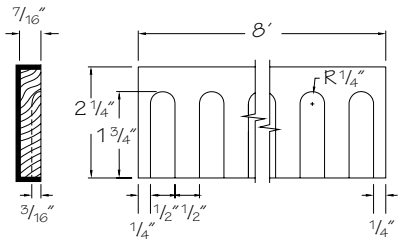

WDM8

- Solid wood
- Painted hardwood supplied for EverCore™ and Thermofoil
- Painted or Stained hardwood supplied for Wood-Grain Foil door styles
- Crafted or Quartersawn door styles will be supplied in plain sawn wood

	A
❖	B
❖	C
❖	E
❖	H
❖	TH
	HG
❖	WG
❖	M
❖	O
❖	QS

Chair Rail

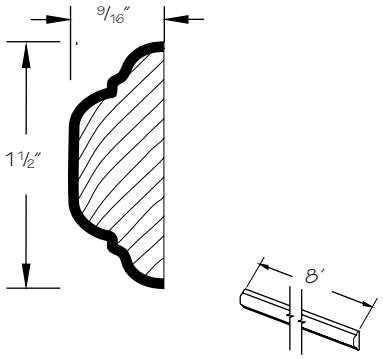

CR8

- Solid wood
- Painted hardwood supplied for EverCore™ and Thermofoil
- Painted or Stained hardwood supplied for Wood-Grain Foil door styles
- Crafted or Quartersawn door styles will be supplied in plain sawn wood
- Designed to overlay LM8

❖	A
❖	B
❖	C
❖	E
❖	H
❖	TH
	HG
❖	WG
❖	M
❖	O
❖	QS

Corner Tall Molding

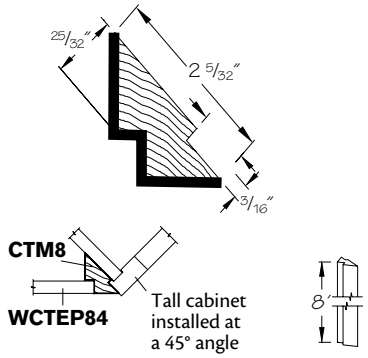

CTM8

- Solid wood
- Painted hardwood supplied for EverCore™ and Thermofoil
- Painted or Stained hardwood supplied for Wood-Grain Foil door styles
- Maple supplied for Birch
- Oak supplied for Hickory
- Crafted or Quartersawn door styles will be supplied in plain sawn wood
- See Option #2 in Diagonal Installation of Standard Tall Cabinets in the back of the Tall Cabinets section
- Corner Tall End Panel (CTEP) and Corner Tall Molding (CTM8) are sold separately
- ***Note:*** For use with WCTEP 84 or 96 only; will ***not*** work with WTEP

❖	A
❖	B
❖	C
❖	E
❖	H
❖	TH
	HG
❖	WG
❖	M
❖	O
❖	QS

Transition Molding

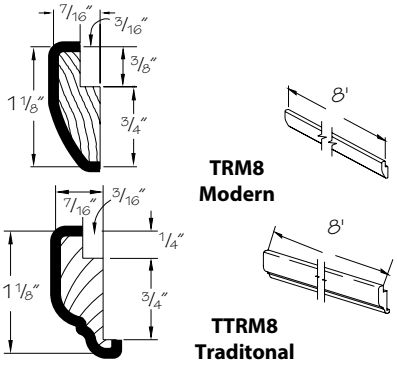

Modern

TRM8

Traditional

TTRM8

- Solid wood
- Painted hardwood supplied for EverCore™ and Thermofoil
- Painted or Stained hardwood supplied for Wood-Grain Foil door styles
- Crafted or Quartersawn door styles will be supplied in plain sawn wood

❖	A
❖	B
❖	C
❖	E
❖	H
❖	TH
	HG
❖	WG
❖	M
❖	O
❖	QS

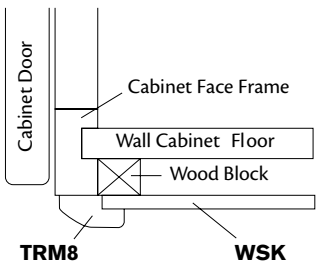

Side view of Wall Cabinet application. Use additional TRM8 or SM8 where cabinet meets wall.

Side View

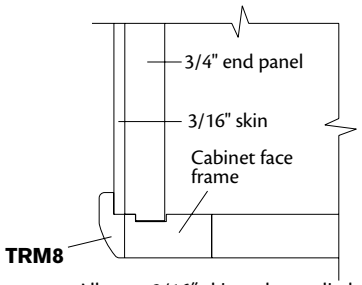

Allows a 3/16" skin to be applied to a cabinet with 3/4" end panels

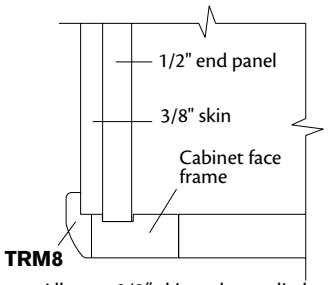

Allows a 3/8" skin to be applied to a cabinet with 1/2" end panels

Top View

Note: *Heavy, dark lines indicate finished surfaces.*

Solid Stock

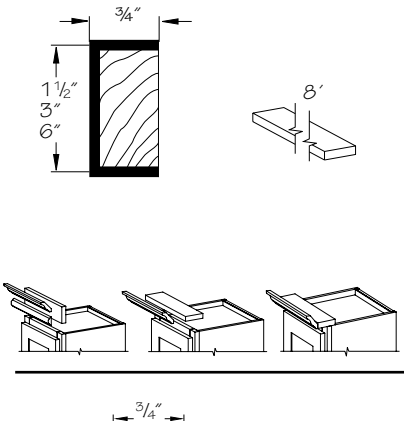

☆ **S3S1**
☆ **S3S3**
S3S6

☆ Crafted or Quartersawn door styles will be supplied in plain sawn wood

- Solid wood
- Painted hardwood supplied for EverCore™ and Thermofoil
- Painted or Stained hardwood supplied for Wood-Grain Foil door styles
- Use solid stock material as finished nailing strip for molding applications
- When ordered in Burnished, Distressed or Vintage finishes, solid stock will receive applicable finish

❖	A
❖	B
❖	C
❖	E
❖	H
❖	TH
	HG
❖	WG
❖	M
❖	O
❖	QS

Library Molding

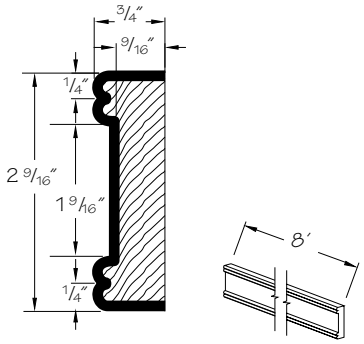

LM8

- Solid wood
- Painted hardwood supplied for EverCore™ and Thermofoil
- Painted or Stained hardwood supplied for Wood-Grain Foil door styles
- Crafted or Quartersawn door styles will be supplied in plain sawn wood

❖	A
❖	B
❖	C
❖	E
❖	H
❖	TH
	HG
❖	WG
❖	M
❖	O
❖	QS

Traditional Casing

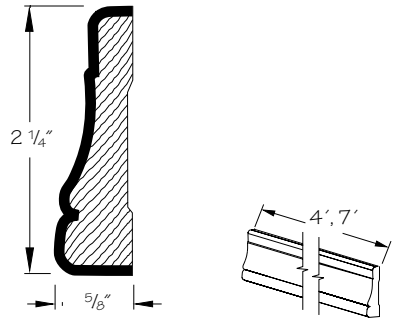

TCS4
TCS7

- Solid wood
- Painted hardwood supplied for EverCore™ and Thermofoil
- Painted or Stained hardwood supplied for Wood-Grain Foil door styles
- Crafted or Quartersawn door styles will be supplied in plain sawn wood



Remember to account for miter cuts and returns when choosing the amount of molding needed for a job.

❖	A
❖	B
❖	C
❖	E
❖	H
❖	TH
	HG
❖	WG
❖	M
❖	O
❖	QS

Modern Casing

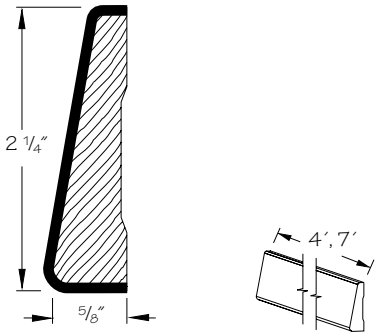

MCS4
MCS7

- Solid wood
- Painted hardwood supplied for EverCore™ and Thermofoil
- Painted or Stained hardwood supplied for Wood-Grain Foil door styles
- Crafted or Quartersawn door styles will be supplied in plain sawn wood

	A
❖	B
❖	C
❖	E
❖	H
❖	TH
	HG
❖	WG
❖	M
❖	O
❖	QS

Cove Casing

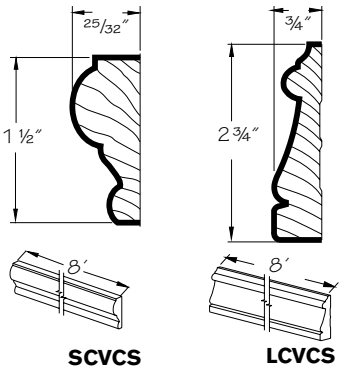

SCVCS LCVCS

Small
SCVCS8
Large
LCVCS8

- Solid wood
- Painted hardwood supplied for EverCore™
- Painted or Stained hardwood supplied for Wood-Grain Foil door styles
- Small Cove Casing (SCVCS) will have painted hardwood and Large Cove Casing (LCVCS) will have foil wrapped MDF supplied for Thermofoil
- Crafted or Quartersawn door styles will be supplied in plain sawn wood

❖	A
❖	B
❖	C
❖	E
❖	H
❖	TH
	HG
❖	WG
❖	M
❖	O
❖	QS

Note: *Heavy, dark lines indicate finished surfaces.*

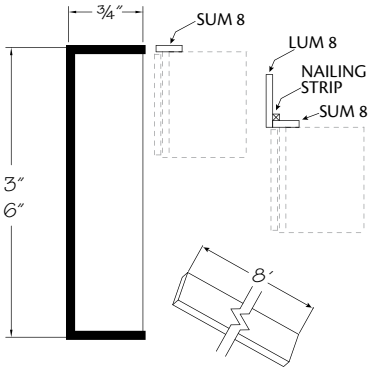

Universal Molding

Small

SUM8

Large

LUM8

- Available for High-Gloss Foil door styles only
- Manufactured to match the doors and drawer fronts

Installation Note: When installing High-Gloss moldings (LUM or SUM), we recommend attaching from the back as touch-up kits are ***not*** available for High-Gloss materials

A
B
C
E
H
TH
❖ HG
WG
M
O
QS

Decorative Enhancements

Note: *Heavy, dark lines indicate finished surfaces.*

Molding Accents

CBE	8
code	length

Construction Options and Modifications

❖ Included as standard
● Available with an upcharge
☆ Available with exceptions
(Blank) ***Not*** available

A	Alder
B	Birch
C	Cherry
E	EverCore™
H	Hickory
TH	Thermofoil
HG	High-Gloss Foil
WG	Wood-Grain Foil
M	Maple
O	Oak
QS	Quartersawn

We offer numerous moldings for decorative and finished applications. Moldings are available in some or all wood species. See chart for coding.

Material dimensions listed may vary slightly from actual dimensions of the product.

All molding ordered in quartersawn door styles will be supplied standard oak unless otherwise noted.

Specifications subject to change without notice.

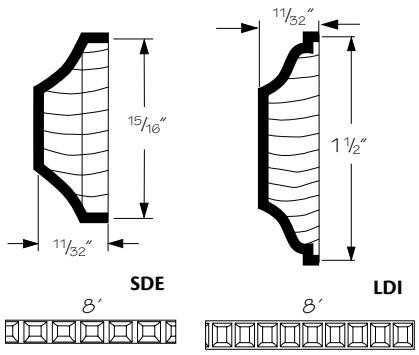

Dentil Insert

Small
SDE8
Large
☆ **LDI8**
☆ ***Not*** available in Rustic Alder door styles

- Solid wood
- Carved
- Painted hardwood supplied for EverCore™ and Thermofoil
- Painted or Stained hardwood supplied for Wood-Grain Foil door styles
- Maple supplied for Birch
- Beech supplied for Hickory, Oak and quartersawn Oak
- Apply with small brad

☆	A
❖	B
❖	C
❖	E
❖	H
❖	TH
	HG
❖	WG
❖	M
❖	O
❖	QS

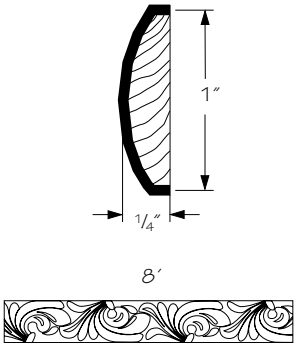

Acanthus Insert

ASI8

- Solid wood
- Embossed design
- Painted hardwood supplied for EverCore™ and Thermofoil
- Painted or Stained hardwood supplied for Wood-Grain Foil door styles
- Maple supplied for Birch
- Beech supplied for Hickory, Oak and quartersawn Oak
- Apply with small brad

	A
❖	B
❖	C
❖	E
❖	H
❖	TH
	HG
❖	WG
❖	M
❖	O
❖	QS

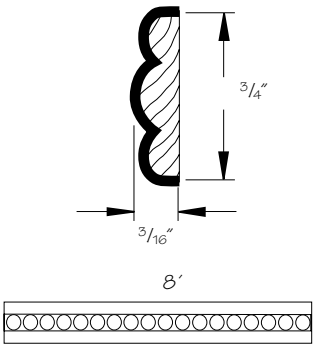

Center Beaded Insert

CBE8

- Solid wood
- Embossed design
- Painted hardwood supplied for EverCore™ and Thermofoil
- Painted or Stained hardwood supplied for Wood-Grain Foil door styles
- Maple supplied for Birch
- Beech supplied for Hickory, Oak and quartersawn Oak
- Apply with small brad

	A
❖	B
❖	C
❖	E
❖	H
❖	TH
	HG
❖	WG
❖	M
❖	O
❖	QS

Note: *Heavy, dark lines indicate finished surfaces.****Note:*** *Heavy, dark lines indicate finished surfaces.*

Egg and Dart Edge

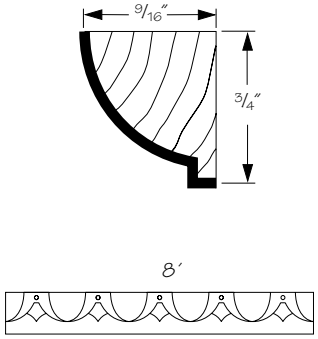

EGE8

- Solid wood
- Carved
- Painted hardwood supplied for EverCore™ and Thermofoil
- Painted or Stained hardwood supplied for Wood-Grain Foil door styles
- Maple supplied for Birch
- Beech supplied for Hickory, Oak and quartersawn Oak
- Apply with small brad

	A
❖	B
❖	C
❖	E
❖	H
❖	TH
	HG
❖	WG
❖	M
❖	O
❖	QS

Ivy Insert

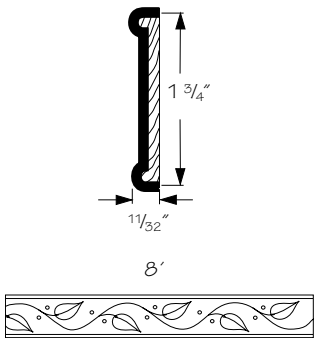

IVI8

- Solid wood
- Embossed design
- Painted hardwood supplied for EverCore™ and Thermofoil
- Painted or Stained hardwood supplied for Wood-Grain Foil door styles
- Maple supplied for Birch
- Beech supplied for Hickory, Oak and quartersawn Oak
- Apply with small brad

	A
❖	B
❖	C
❖	E
❖	H
❖	TH
	HG
❖	WG
❖	M
❖	O
❖	QS

Olive Leaf Molding

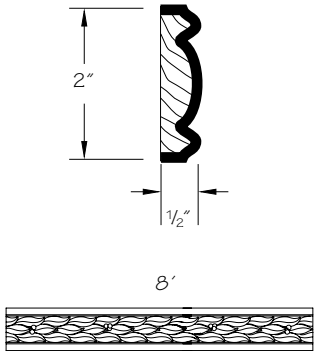

OLM8

- Solid wood
- Carved
- Painted hardwood supplied for EverCore™ and Thermofoil
- Painted or Stained hardwood supplied for Wood-Grain Foil door styles
- Oak supplied for Hickory
- Maple supplied for Birch
- Crafted or Quartersawn door styles will be supplied in plain sawn wood
- Apply with small brad

	A
❖	B
❖	C
❖	E
❖	H
❖	TH
	HG
❖	WG
❖	M
❖	O
❖	QS

Tall Acanthus Capital

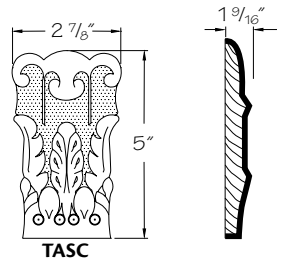

TASC

- Solid wood
- Carved
- Painted hardwood supplied for EverCore™ and Thermofoil
- Maple supplied for Birch
- Beech supplied for Hickory, Oak and quartersawn Oak
- Apply with small brad

	A
❖	B
❖	C
❖	E
❖	H
❖	TH
	HG
	WG
❖	M
❖	O
❖	QS

Rosette

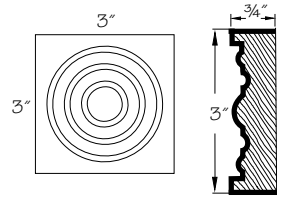

R33

- Solid wood
- Painted hardwood supplied for EverCore™ and Thermofoil
- Crafted or Quartersawn door styles will be supplied in plain sawn wood

	A
❖	B
❖	C
❖	E
❖	H
❖	TH
	HG
	WG
❖	M
❖	O
❖	QS

Note: *Heavy, dark lines indicate finished surfaces.*

Oval Rosette

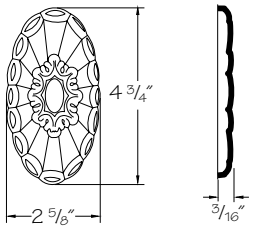

OVR

- Wood veneer
- Embossed design
- Painted hardwood supplied for EverCore™ and Thermofoil
- Birch supplied for Maple
- Crafted or Quartersawn door styles will be supplied in plain sawn wood

	A
❖	B
❖	C
❖	E
❖	H
❖	TH
	HG
	WG
❖	M
❖	O
❖	QS

Acanthus Onlay



ASPO

- Solid wood
- Carved
- Painted hardwood supplied for EverCore™ and Thermofoil
- Beech supplied for Hickory, Oak and quartersawn Oak
- Maple supplied for Birch
- Apply with small brad

	A
❖	B
❖	C
❖	E
❖	H
❖	TH
	HG
	WG
❖	M
❖	O
❖	QS

Olive Leaf Onlay



OLPO

- Solid wood
- Carved
- Painted hardwood supplied for EverCore™ and Thermofoil
- Beech supplied for Hickory, Oak and quartersawn Oak
- Maple supplied for Birch
- Apply with small brad

	A
❖	B
❖	C
❖	E
❖	H
❖	TH
	HG
	WG
❖	M
❖	O
❖	QS

Timeless Onlay

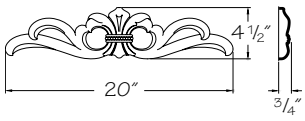

TLPO

- Solid wood
- Carved
- Painted hardwood supplied for EverCore™
- Apply with small brad

	A
	B
❖	C
❖	E
	H
	TH
	HG
	WG
❖	M
	O
	QS

Acanthus Corbel

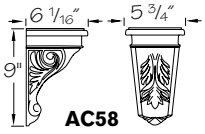

AC58

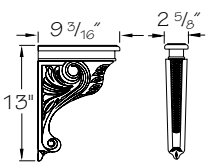

AC313

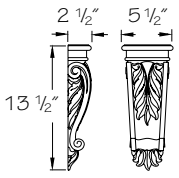

AC514

AC58
AC313
AC514

- Solid wood
- Painted hardwood supplied for EverCore™ and Thermofoil
- Painted or Stained hardwood supplied for Wood-Grain Foil door styles
- Maple supplied for Birch
- Oak supplied for Hickory
- Crafted or Quartersawn door styles will be supplied in plain sawn wood

	A
❖	B
❖	C
❖	E
❖	H
❖	TH
	HG
❖	WG
❖	M
❖	O
❖	QS

Note: *Heavy, dark lines indicate finished surfaces.*

Cove Corbel

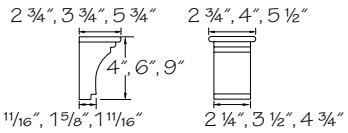

CVC34, CVC46, CVC69

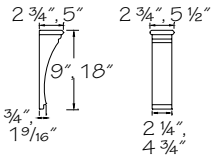

CVC29, CVC518

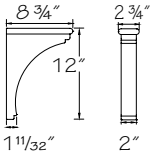

CVC212

CVC34
CVC46
CVC29
CVC69
CVC212
CVC518

- Solid wood
- Painted hardwood supplied for EverCore™ and Thermofoil
- Painted or Stained hardwood supplied for Wood-Grain Foil door styles
- Oak supplied for Hickory
- Maple supplied for Birch
- Crafted or Quartersawn door styles will be supplied in plain sawn wood

❖	A
❖	B
❖	C
❖	E
❖	H
❖	TH
	HG
❖	WG
❖	M
❖	O
❖	QS

New

Empire Corbel

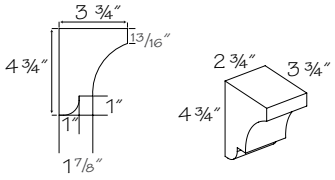

EPC35

Grey color coding indicates new product, size or code.

- Solid wood
- Painted hardwood supplied for EverCore™ and Cream Thermofoil
- Painted or Stained hardwood supplied for Wood-Grain Foil door styles
- Crafted or Quartersawn door styles will be supplied in plain sawn wood

❖	A
❖	B
❖	C
❖	E
❖	H
❖	TH
	HG
❖	WG
❖	M
❖	O
❖	QS

Olive Leaf Corbel

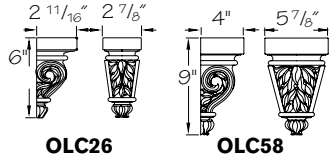

OLC26 **OLC58**

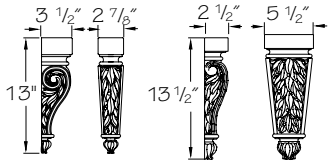

OLC313 **OLC514**

OLC26
OLC58
OLC313
OLC514

- Solid wood
- Painted hardwood supplied for EverCore™ and Thermofoil
- Painted or Stained hardwood supplied for Wood-Grain Foil door styles
- Maple supplied for Birch
- Oak supplied for Hickory
- Crafted or Quartersawn door styles will be supplied in plain sawn wood

	A
❖	B
❖	C
❖	E
❖	H
❖	TH
	HG
❖	WG
❖	M
❖	O
❖	QS

Rosette Corbel

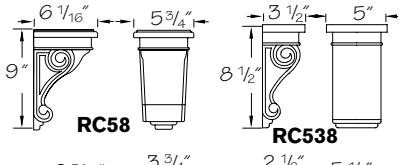

RC58 **RC538**

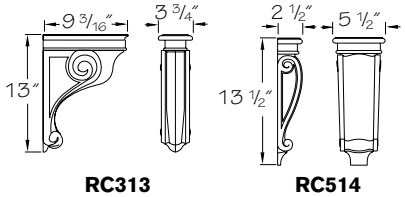

RC313 **RC514**

RC58
RC313
RC514
RC538

Grey color coding indicates new product, size or code.

- Solid wood
- Painted hardwood supplied for EverCore™ and Thermofoil
- Maple supplied for Birch
- Oak supplied for Hickory
- Crafted or Quartersawn door styles will be supplied in plain sawn wood

	A
❖	B
❖	C
❖	E
❖	H
❖	TH
	HG
	WG
❖	M
❖	O
❖	QS

Note: *Heavy, dark lines indicate finished surfaces.*

Sterling Corbel

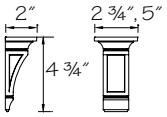

SC25, SC65

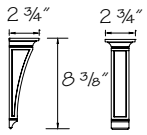

SC58

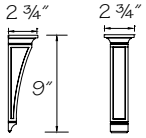

SC39

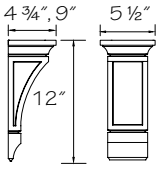

SC512, SC612

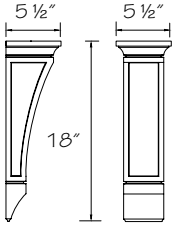

SC618

SC25
SC58
SC65
SC39
SC512
SC612
SC618

Grey color coding indicates new product, size or code.

- Solid wood
- Painted hardwood supplied for EverCore™ and Thermofoil
- ☆ Crafted or Quartersawn door styles will be supplied in plain sawn wood
- ***Note:*** The recess panel of these corbels is chiseled and sanded by hand. This process can create some random inconsistent areas within the panel recess

The Sterling Collection design combines automated wood-machining processes with hand detailing. Because of the hand detailing, slight imperfection and/or differences may exist from part to part and are normal. These do ***not*** affect the structural performance of the product but enhance the aesthetics of each piece.

❖	A
	B
❖	C
❖	E
	H
❖	TH
	HG
☆	WG
❖	M
	O
	QS

New

Transitional Corbel

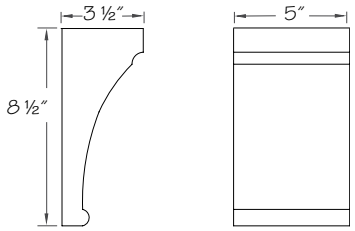

TRC58

Grey color coding indicates new product, size or code.

- Solid wood
- Painted hardwood supplied for EverCore™ and Thermofoil
- Painted or Stained hardwood supplied for Wood-Grain Foil door styles
- ☆ Quartersawn door styles will be supplied in plain sawn wood
- ***Not*** available in Crafted or Rustic door styles

	A
❖	B
❖	C
❖	E
	H
❖	TH
	HG
	WG
❖	M
❖	O
☆	QS

Aluminum Square Leg

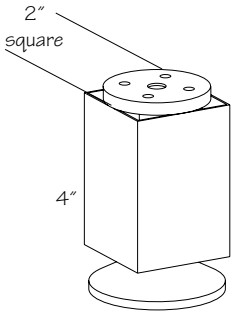

	Adjustable from:
ASL▪4	4″ - 4 3/4″

- Available on all door styles
- Mounting plate included; mounting screws are not
- Decorative feet or legs should support the cabinet by way of the end panels, ***not*** the cabinet floor

❖	A
❖	B
❖	C
❖	E
❖	H
❖	TH
❖	HG
❖	WG
❖	M
❖	O
❖	QS

Aluminum Round Leg

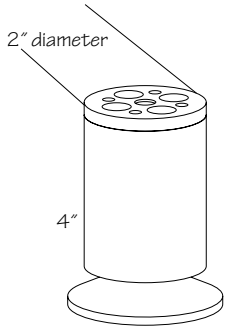

	Adjustable from:
ARL▪4	4″ - 4 3/4″

- Available on all door styles
- Mounting plate included; mounting screws are not
- Decorative feet or legs should support the cabinet by way of the end panels, ***not*** the cabinet floor

❖	A
❖	B
❖	C
❖	E
❖	H
❖	TH
❖	HG
❖	WG
❖	M
❖	O
❖	QS

Note: *Heavy, dark lines indicate finished surfaces.*

Classic Leg

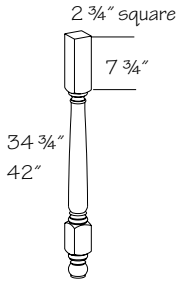

CL334
CL342

- Solid wood
- Painted hardwood supplied for EverCore™ and Thermofoil
- Painted or Stained hardwood supplied for Wood-Grain Foil door styles
- Oak supplied for Hickory
- Crafted or Quartersawn door styles will be supplied in plain sawn wood
- Decorative feet or legs should support the cabinet by way of the end panels, ***not*** the cabinet floor
- Trimmable

❖	A
❖	B
❖	C
❖	E
❖	H
❖	TH
	HG
❖	WG
❖	M
❖	O
❖	QS

Stainless Round Leg

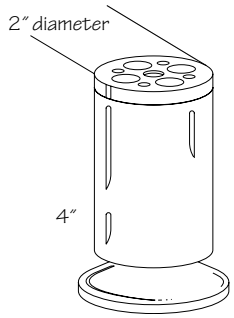

Adjustable from:

SRL▪4 4" - 4 3/4"

- Available on all door styles
- Mounting plate included; mounting screws are not
- Decorative feet or legs should support the cabinet by way of the end panels, ***not*** the cabinet floor

❖	A
❖	B
❖	C
❖	E
❖	H
❖	TH
❖	HG
❖	WG
❖	M
❖	O
❖	QS

Decorative Leg

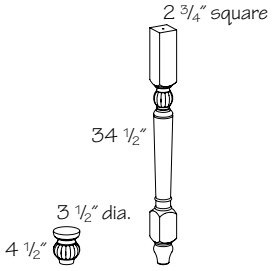

DCL **DL334**

DCL
DL334

- Solid wood
- Painted hardwood supplied for EverCore™ and Thermofoil
- ☆ Painted hardwood supplied for Wood-Grain Foil door styles; only available in white
- Decorative feet or legs should support the cabinet by way of the end panels, ***not*** the cabinet floor
- Trimmable

❖	A
	B
❖	C
❖	E
	H
❖	TH
	HG
☆	WG
❖	M
	O
	QS

New

Empire Leg

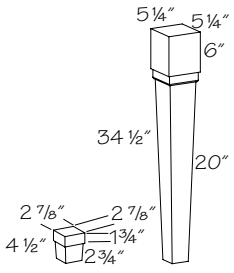

EPLG **EPL534**

EPLG
EPL534

Grey color coding indicates new product, size or code.

- Solid wood
- Painted hardwood supplied for EverCore™ and Cream Thermofoil
- Painted or Stained hardwood supplied for Wood-Grain Foil door styles
- Crafted or Quartersawn door styles will be supplied in plain sawn wood

❖	A
❖	B
❖	C
❖	E
❖	H
❖	TH
	HG
❖	WG
❖	M
❖	O
❖	QS

Federal Leg

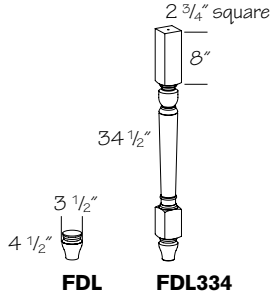

FDL **FDL334**

FDL
FDL334

- Solid wood
- Painted hardwood supplied for EverCore™ and Thermofoil
- ☆ Painted hardwood supplied for Wood-Grain Foil door styles; only available in white
- Decorative feet or legs should support the cabinet by way of the end panels, ***not*** the cabinet floor
- Trimmable

❖	A
	B
❖	C
❖	E
	H
❖	TH
	HG
☆	WG
❖	M
	O
	QS

Note: *Heavy, dark lines indicate finished surfaces.*

Fluted Leg

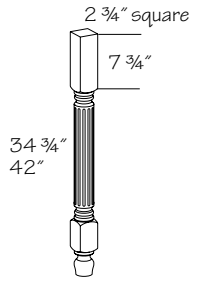

FL334
FL342

- Solid wood
- Painted hardwood supplied for EverCore™ and Thermofoil
- Painted or Stained hardwood supplied for Wood-Grain Foil door styles
- Oak supplied for Hickory
- Crafted or Quartersawn door styles will be supplied in plain sawn wood
- Decorative feet or legs should support the cabinet by way of the end panels, ***not*** the cabinet floor
- Trimmable

❖	A
❖	B
❖	C
❖	E
❖	H
❖	TH
	HG
❖	WG
❖	M
❖	O
❖	QS

Sterling Leg

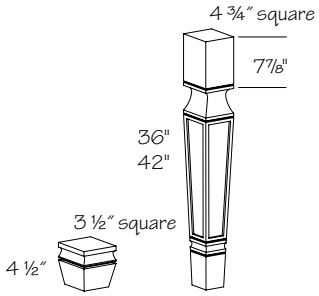

STL **STL536** **STL542**

STL
STL536
STL542

- Solid wood
- Painted hardwood supplied for EverCore™ and Thermofoil
- ☆ Painted hardwood supplied for Wood-Grain Foil door styles; only available in white
- Decorative feet or legs should support the cabinet by way of the end panels, ***not*** the cabinet floor
- Trimmable
- ***Note:*** The recess panel of this leg/post is chiseled and sanded by hand. This process can create some random inconsistent areas within the panel recess



The Sterling Collection design combines automated wood-machining processes with hand detailing. Because of the hand detailing, slight imperfection and/or differences may exist from part to part and are normal. These do ***not*** affect the structural performance of the product but enhance the aesthetics of each piece.

❖	A
	B
❖	C
❖	E
	H
❖	TH
	HG
☆	WG
❖	M
	O
	QS

Tapered Leg

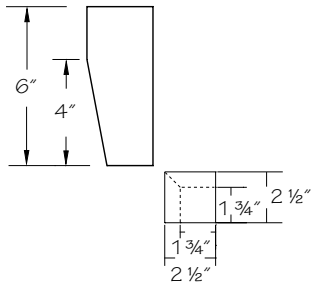

TPL

- Solid wood
- Painted hardwood supplied for EverCore™ and Thermofoil
- Painted or Stained hardwood supplied for Wood-Grain Foil door styles
- Oak supplied for Hickory
- Crafted or Quartersawn door styles will be supplied in plain sawn wood
- Decorative feet or legs should support the cabinet by way of the end panels, ***not*** the cabinet floor
- Trimmable

❖	A
❖	B
❖	C
❖	E
❖	H
❖	TH
	HG
❖	WG
❖	M
❖	O
❖	QS

Apple Leg

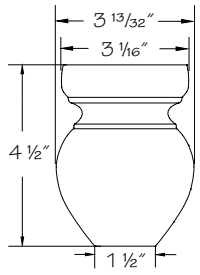

APL

- Solid wood
- Painted hardwood supplied for EverCore™ and Thermofoil
- Painted or Stained hardwood supplied for Wood-Grain Foil door styles
- Oak supplied for Hickory
- Maple supplied for Birch
- Decorative feet or legs should support the cabinet by way of the end panels, ***not*** the cabinet floor
- Crafted or Quartersawn door styles will be supplied in plain sawn wood
- Trimmable

❖	A
❖	B
❖	C
❖	E
❖	H
❖	TH
	HG
❖	WG
❖	M
❖	O
❖	QS

Cove Leg

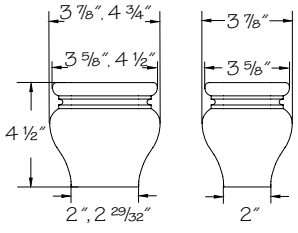

CVL 4 3/4" x 3 7/8"
CVL •2 3 7/8" x 3 7/8" square

- Solid wood
- Painted hardwood supplied for EverCore™ and Thermofoil
- Painted or Stained hardwood supplied for Wood-Grain Foil door styles
- Oak supplied for Hickory
- Maple supplied for Birch
- Crafted or Quartersawn door styles will be supplied in plain sawn wood
- Decorative feet or legs should support the cabinet by way of the end panels, ***not*** the cabinet floor

❖	A
❖	B
❖	C
❖	E
❖	H
❖	TH
	HG
❖	WG
❖	M
❖	O
❖	QS

Note: *Heavy, dark lines indicate finished surfaces.*

French Leg

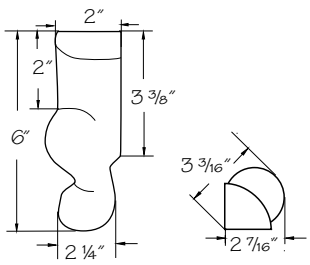

FRL

- Solid wood
- Painted hardwood supplied for EverCore™ and Thermofoil
- Painted or Stained hardwood supplied for Wood-Grain Foil door styles
- Maple supplied for Birch, Hickory, Oak and quartersawn Oak
- Decorative feet or legs should support the cabinet by way of the end panels, ***not*** the cabinet floor
- Trimmable

	A
❖	B
❖	C
❖	E
❖	H
❖	TH
	HG
❖	WG
❖	M
❖	O
❖	QS

Tulip Leg

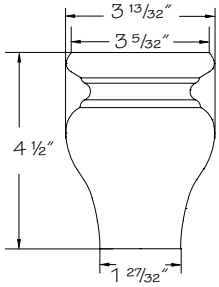

TLL

- Solid wood
- Painted hardwood supplied for EverCore™ and Thermofoil
- Painted or Stained hardwood supplied for Wood-Grain Foil door styles
- Oak supplied for Hickory
- Maple supplied for Birch
- Decorative feet or legs should support the cabinet by way of the end panels, ***not*** the cabinet floor
- Crafted or Quartersawn door styles will be supplied in plain sawn wood
- Trimmable

❖	A
❖	B
❖	C
❖	E
❖	H
❖	TH
	HG
❖	WG
❖	M
❖	O
❖	QS

Decorative Island End Cap Legs

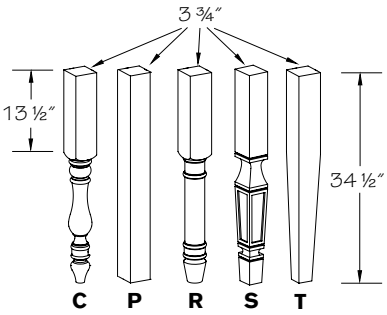

Classic Leg
CIECL434
Plain Square Post
PIECL434
Roman Spindle
RIECL434

Sterling Leg
STIECL434
Tapered Leg
TIECL434

- Solid wood
- Painted hardwood supplied for EverCore™ and Thermofoil
- Painted hardwood supplied for Wood-Grain Foil door styles; only available in white
- Dimension matches the legs used on Island End Cap cabinets (IEC)
- Decorative feet or legs should support the cabinet by way of the end panels, ***not*** the cabinet floor
- Trimmable

❖	A
	B
❖	C
❖	E
	H
❖	TH
	HG
☆	WG
❖	M
	O
	QS

Decorative Posts

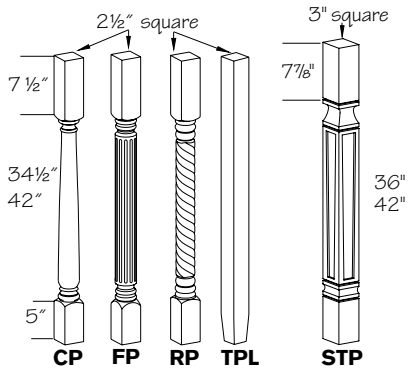

Classic
CP234
CP242
Fluted
■ **FP234**
■ **FP242**
Rope
RP234
RP242

Tapered
TPL34
TPL42
Sterling
❊ **STP336**
❊ **STP342**

- Solid wood
- Painted hardwood supplied for EverCore™ and Thermofoil
- Painted or Stained hardwood supplied for Wood-Grain Foil door styles
- Oak supplied for Hickory
- Crafted or Quartersawn door styles will be supplied in plain sawn wood
- Trimmable

■ ***Not*** available in Morristown; Melrose and Putnam supplied plain sawn
❊ Available in Alder, Cherry, Thermofoil and Maple door styles only

❖	A
☆	B
❖	C
☆	E
☆	H
❖	TH
	HG
❖	WG
❖	M
☆	O
☆	QS

Note: *Heavy, dark lines indicate finished surfaces.*

Toe Kick Furniture Corner

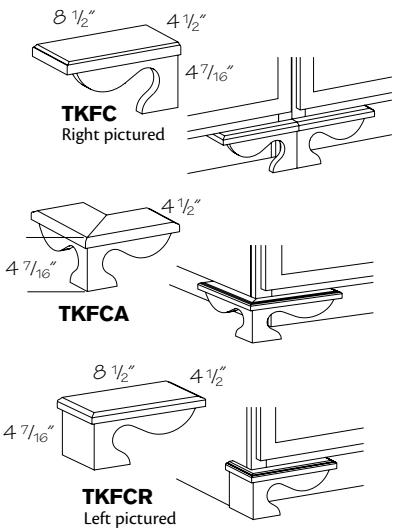

Specify R or L

TKFC ▪R or L

TKFCA

TKFCR ▪R or L

- Solid wood
- Painted hardwood supplied for EverCore™ and Thermofoil
- Painted or Stained hardwood supplied for Wood-Grain Foil door styles
- Crafted or Quartersawn door styles will be supplied in plain sawn wood
- When using TKFCA with base cabinets specify recessed toe kick
- Decorative feet or legs should support the cabinet by way of the end panels, ***not*** the cabinet floor

❖	A
❖	B
❖	C
❖	E
❖	H
❖	TH
	HG
❖	WG
❖	M
❖	O
❖	QS

Split Decorative Posts

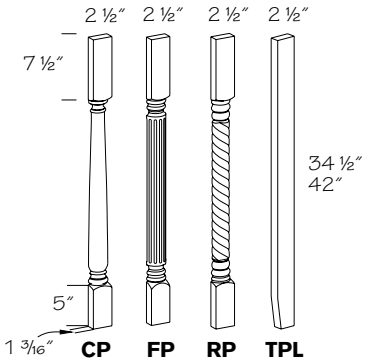

Classic
CP234 ▪S

Rope
RP234 ▪S

Fluted
■ **FP234 ▪S**

Tapered
TPL34 ▪S

■ ***Not*** available in Morristown; Melrose and Putnam supplied plain sawn

- Solid wood
- Painted hardwood supplied for EverCore™ and Thermofoil
- Painted or Stained hardwood supplied for Wood-Grain Foil door styles
- Oak supplied for Hickory
- Crafted or Quartersawn door styles will be supplied in plain sawn wood
- Trimmable

❖	A
❖	B
❖	C
❖	E
❖	H
❖	TH
	HG
❖	WG
❖	M
❖	O
❖	QS

Fluted Square Posts

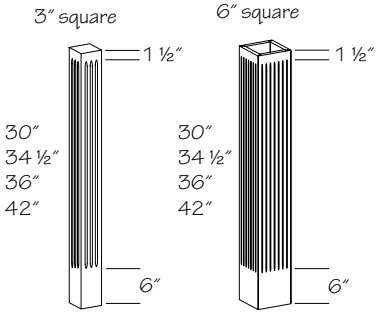

FSP3X3▪30
FSP6X6▪30
FSP3X3▪34
FSP6X6▪34
FSP3X3▪36
FSP6X6▪36
FSP3X3▪42
FSP6X6▪42

- Solid wood
- Painted hardwood supplied for EverCore™ and Thermofoil
- Painted or Stained hardwood supplied for Wood-Grain Foil door styles

☆ ***Not*** available in Morristown; Melrose and Putnam supplied plain sawn

❖	A
❖	B
❖	C
❖	E
❖	H
❖	TH
	HG
❖	WG
❖	M
❖	O
☆	QS

Plain Square Posts

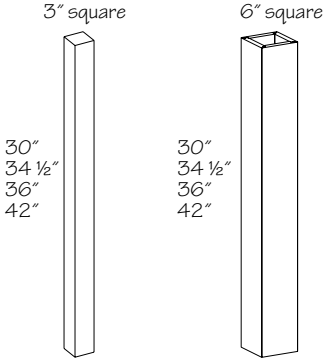

PSP3X3▪30
☆ **PSP6X6▪30**
PSP3X3▪34
☆ **PSP6X6▪34**
PSP3X3▪36
☆ **PSP6X6▪36**
PSP3X3▪42
☆ **PSP6X6▪42**

☆ ***Not*** available in Wood-Grain Foil door styles

- Solid wood
- Painted hardwood supplied for EverCore™ and Thermofoil
- Painted or Stained hardwood supplied for Wood-Grain Foil door styles
- Crafted or Quartersawn door styles will be supplied in plain sawn wood

❖	A
❖	B
❖	C
❖	E
❖	H
❖	TH
	HG
☆	WG
❖	M
❖	O
❖	QS

Note: *Heavy, dark lines indicate finished surfaces.*

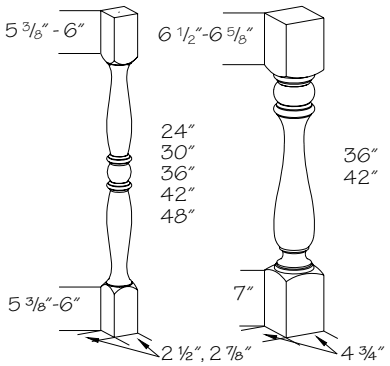

Spindles

SP224	2" x 2" x 24"
SP230	2 1/2" x 2 1/2" x 30"
SP336	2 7/8" x 2 7/8" x 36"
SP536	4 3/4" x 4 3/4" x 36"
SP342	2 7/8" x 2 7/8" x 42"
SP542	4 3/4" x 4 3/4" x 42"
SP348	2 7/8" x 2 7/8" x 48"

- Solid wood
- Painted hardwood supplied for EverCore™ and Thermofoil
- Painted or Stained hardwood supplied for Wood-Grain Foil door styles
- Oak supplied for Hickory
- Crafted or Quartersawn door styles will be supplied in plain sawn wood
- Trimmable 4" each end; SP224 trimmable 5"

❖	A
❖	B
❖	C
❖	E
❖	H
❖	TH
	HG
❖	WG
❖	M
❖	O
❖	QS

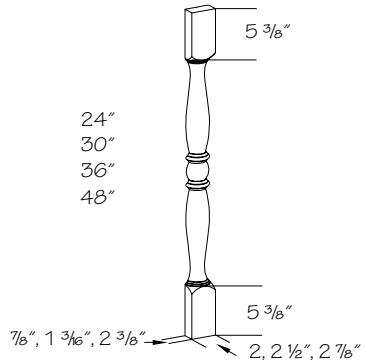

Split Spindles

SP224 •S	2" x 7/8" x 24"
SP230 •S	2 1/2" x 1 3/16" x 30"
SP336 •S	2 7/8" x 2 3/8" x 36"
SP348 •S	2 7/8" x 2 3/8" x 48"

- Solid wood
- Painted hardwood supplied for EverCore™ and Thermofoil
- Painted or Stained hardwood supplied for Wood-Grain Foil door styles
- Oak supplied for Hickory
- Crafted or Quartersawn door styles will be supplied in plain sawn wood
- Trimmable 4" each end; SP224•S trimmable 5"

❖	A
❖	B
❖	C
❖	E
❖	H
❖	TH
	HG
❖	WG
❖	M
❖	O
❖	QS

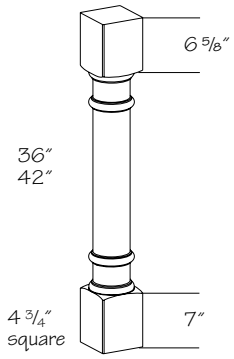

Roman Spindles

RSP536
RSP542

- Solid wood
- Painted hardwood supplied for EverCore™ and Thermofoil
- Painted or Stained hardwood supplied for Wood-Grain Foil door styles
- Oak supplied for Hickory
- Crafted or Quartersawn door styles will be supplied in plain sawn wood

❖	A
❖	B
❖	C
❖	E
❖	H
❖	TH
	HG
❖	WG
❖	M
❖	O
❖	QS

Note: *Heavy, dark lines indicate finished surfaces.*

Decorative Hardware

Construction Options and Modifications

7077	•M
code	maple

Color variation may exist between decorative hardware designs that share same finish color name.

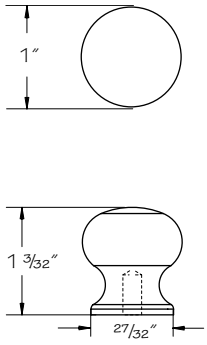

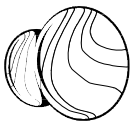

Spice Drawer Cabinet Replacement Hardware

161 Birch and Maple
171 Cherry
181 Oak and Hickory
191 Alder
634 Supplied White for Cream and White

- ***Cannot*** be used for whole kitchen orders; for replacements only
- Cherry supplied for Alder
- ***Not*** available in High-Gloss Foil or Wood-Grain Foil door styles

---

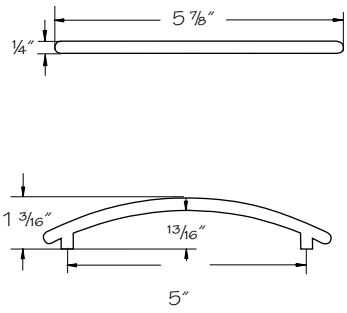



Satin Chrome 5” Center Pull

205

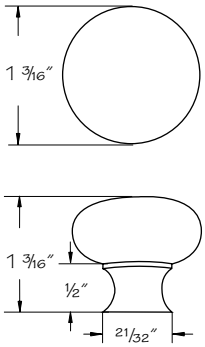



Matte Nickel Knob

506

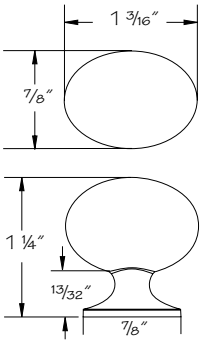

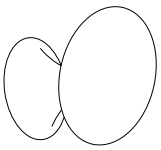

Medium Football Knob

3003 Oil Rubbed Bronze
- Also see companion 3004

3015 Satin Nickel

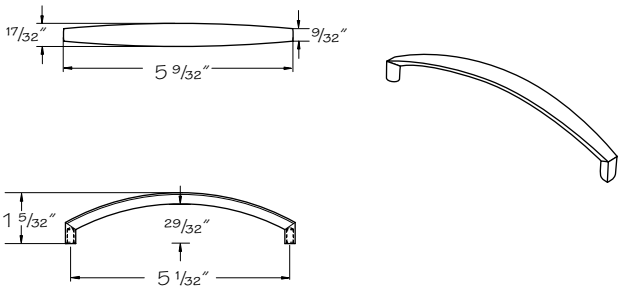

Oil Rubbed Bronze Pull

3004

- Also see companion 3003

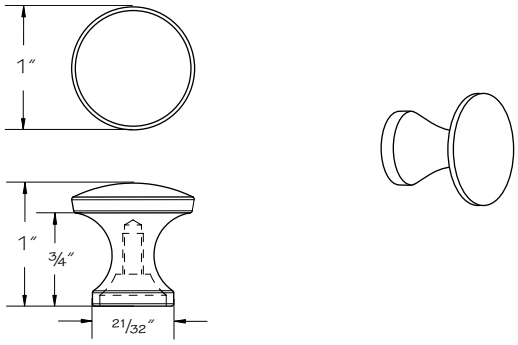

Satin Nickel Knob

3013

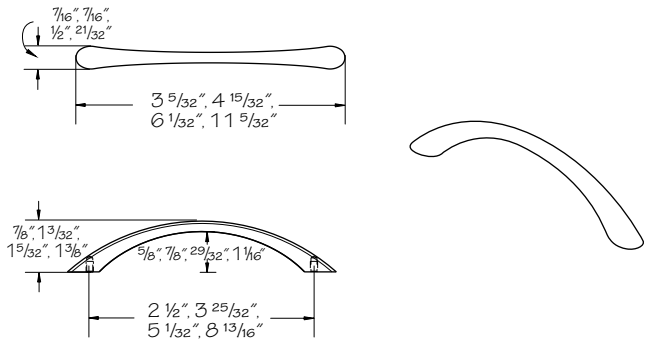

Satin Nickel Tapered Bow Pull

3018	2 1/2″ center
3019	3 25/32″ center
3020	5 1/32″ center
3021	8 13/16″ center

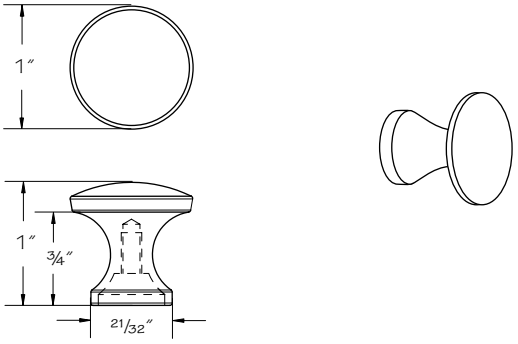

Brushed Brass Tapered Knob

3013 ▪BBS

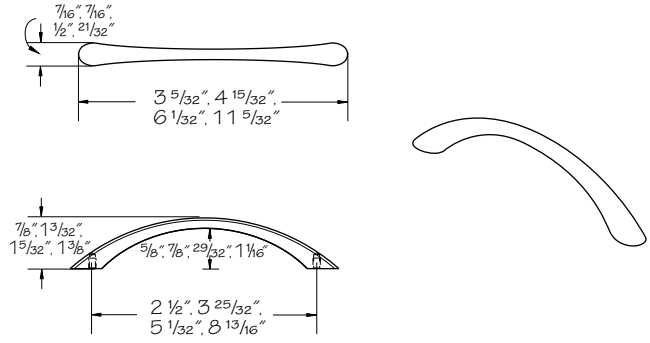

Brushed Brass Tapered Bow Pull

3018 ▪BBS	2 1/2″ center
3019 ▪BBS	3 25/32″ center
3020 ▪BBS	5 1/32″ center
3021 ▪BBS	8 13/16″ center

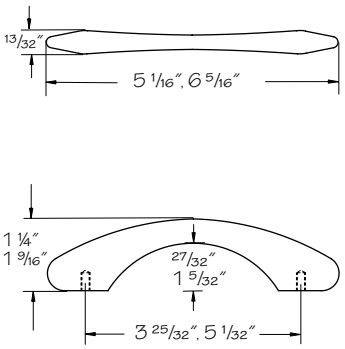

Satin Nickel Dog Bone Pull

3023 3 25/32″ center
3024 5 1/32″ center

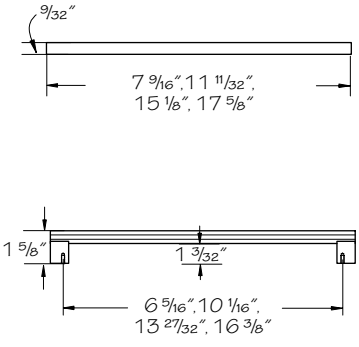

Aluminum Round Bar Pull

3035 6 5/16″ center
3036 10 1/16″ center
3037 13 27/32″ center
3038 16 3/8″ center

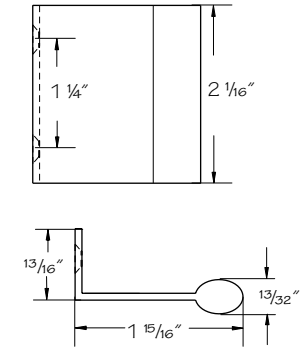

Aluminum Integrated Pull

3042

- Use a 7/64″ drill bit for pilot holes
- Designed to be screwed into back of door
- For use on aluminum frame doors

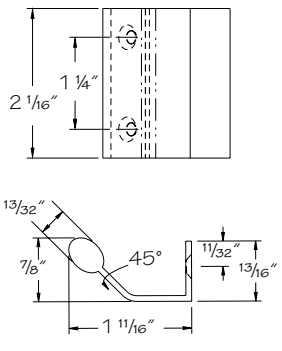

Aluminum Integrated Angled Pull

3043

- Use a 7/64″ drill bit for pilot holes
- Designed to be screwed into back of door
- For use on aluminum frame doors
- Use on Wall Top Hinge (WTH, WRTH) cabinets when stacking on top of Wall Lateral Bifold (WLBF) cabinets

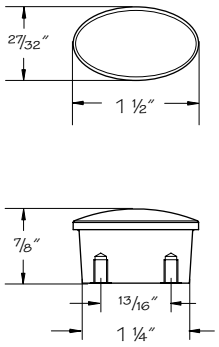

Tailored Knob

7017 ▪DBB Dark Brushed Bronze
7017 ▪MN Matte Nickel
7017 ▪PN Polished Nickel

Square Wood Knob

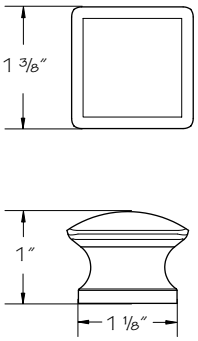

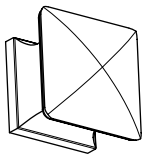

7023 ▪C Cherry
7023 ▪M Maple
7023 ▪O Oak

- Available in Cherry, Maple, Oak and Foil finishes
- Thermofoils are painted hardwood
- ***Not*** available in High-Gloss Foil finishes

Antique Knob

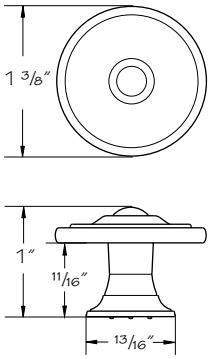

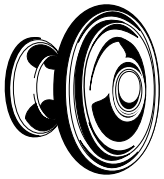

7025 Antique pewter and copper

Antique Pull

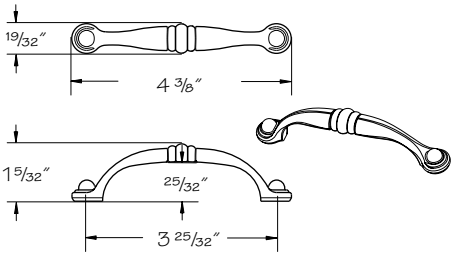

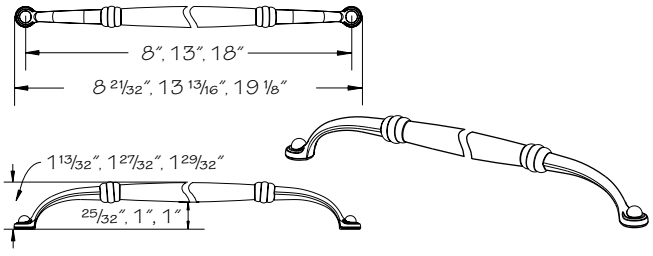

Standard Pulls

7026 3 25/32" center
7104 8" center

Appliance Pulls

7105 13" center
7106 18" center

- Antique pewter and copper

Trunk Pull

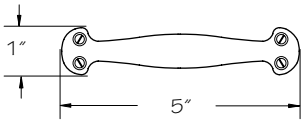



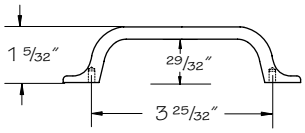

7033 ▪AP Antique Pewter
7033 ▪BP Blackened Pewter
7033 ▪MN Matte Nickel

- Suitcase type with faux screws

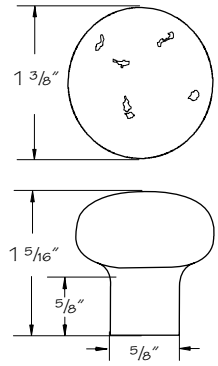



Aged Bronze Knob

7034

- Distressed aged bronze

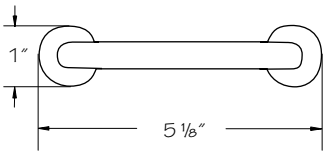

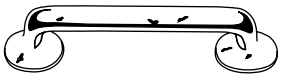

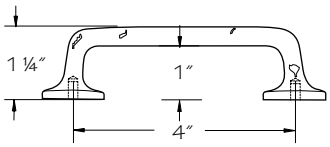

Aged Bronze Pull

7035

- Distressed aged bronze

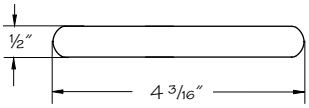



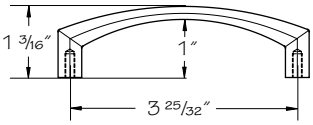

Tailored Pull

7040 ▪DBB Dark Brushed Bronze
7040 ▪MN Matte Nickel
7040 ▪PN Polished Nickel

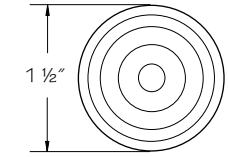

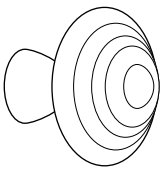

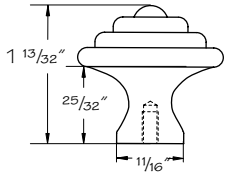

Pewter Domed Ring Knob

7053

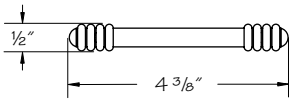

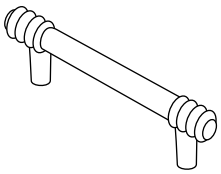

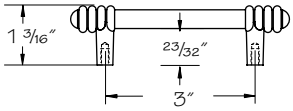

Pewter Ringed Pull

7054

Olive Leaf Pull

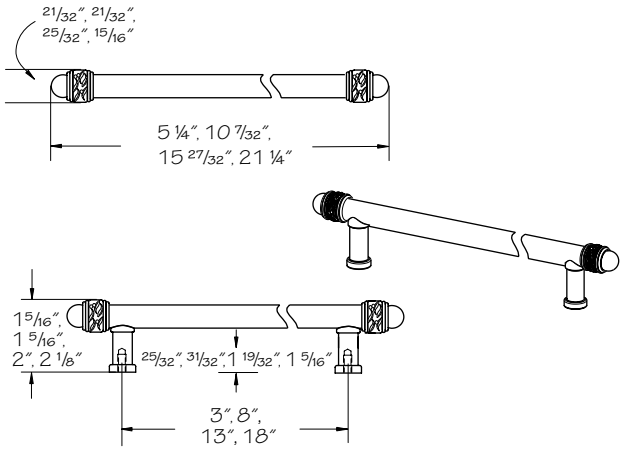

Standard Pulls

7065 •AP	Antique Pewter	3" center
7065 •BZ	Bronze	3" center
7107 •AP	Antique Pewter	8" center
7107 •BZ	Bronze	8" center

Appliance Pulls

7108 •AP	Antique Pewter	13" center
7108 •BZ	Bronze	13" center
7109 •AP	Antique Pewter	18" center
7109 •BZ	Bronze	18" center

Olive Leaf Knob

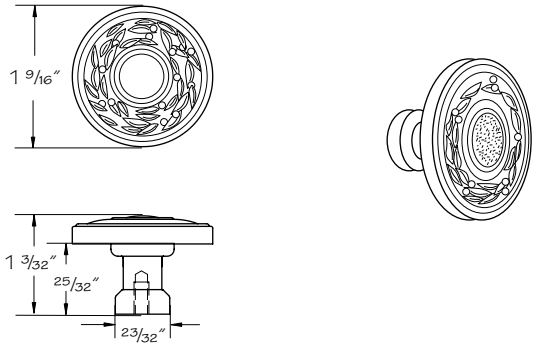

7066 •AP Antique Pewter
7066 •BZ Bronze

Aged Pewter Beaded Pull

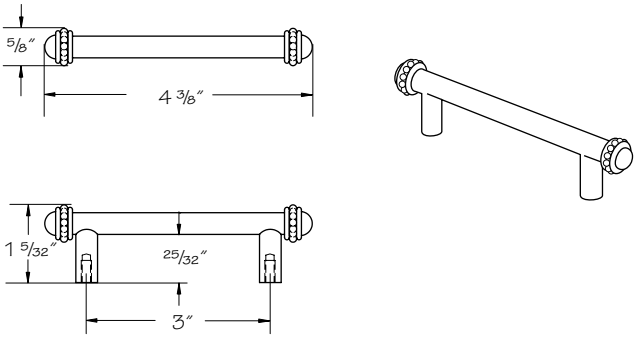

7067

Aged Pewter Beaded Knob With Backplate

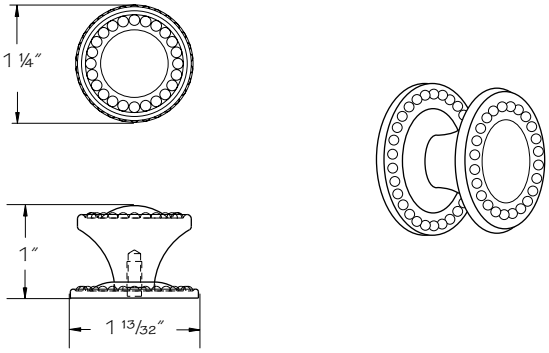

7068

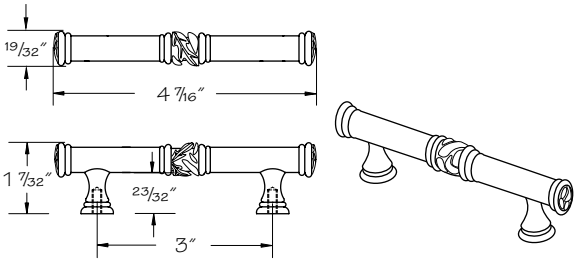

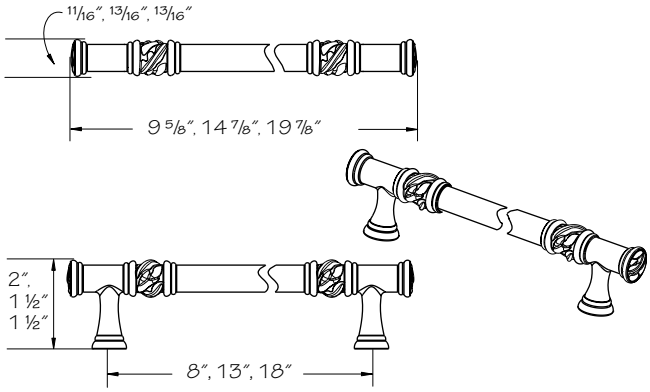

Venetian Bronze Victorian Leaf Pull

7070 3″ center
7110 8″ center
7111 13″ center
7112 18″ center

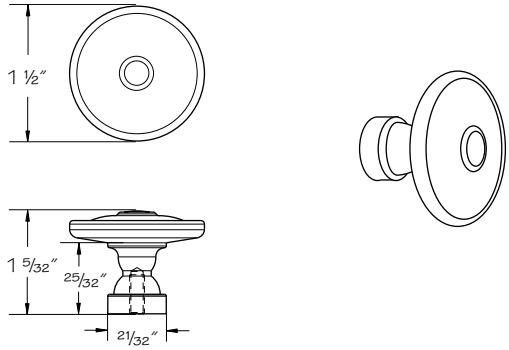

Venetian Bronze Rustic Knob

7071

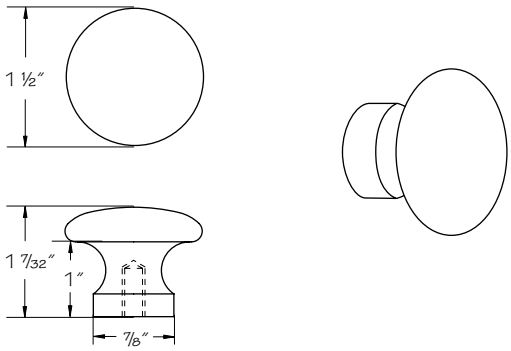

Round Knob

7077 ▪C Cherry
7077 ▪M Maple
7077 ▪O Oak

- Available in Cherry, Maple, Oak and Foil finishes
- Thermofoils are painted hardwood
- ***Not*** available in High-Gloss Foil finishes

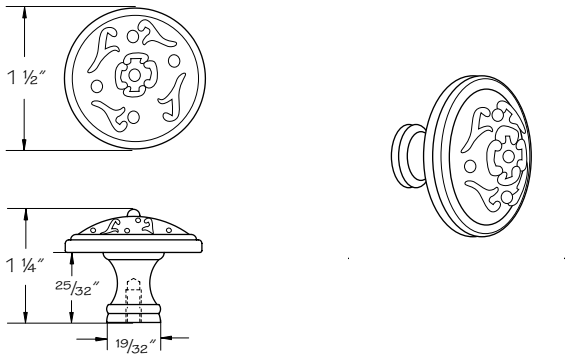

Distressed French Lace Knob

7080

- Moderate finish variances are possible

Distressed French Lace Pull

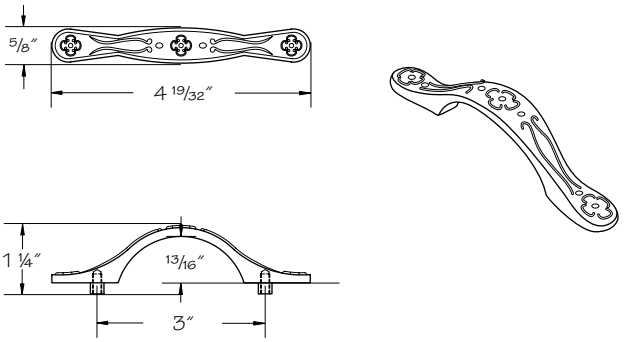

7081

- Moderate finish variances are possible

Bar Pull

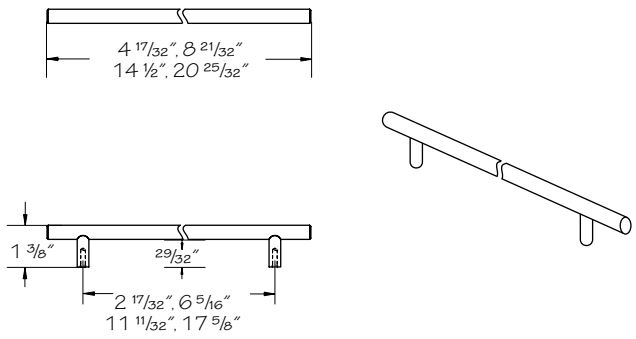

Standard Pulls

❊	**7085 •AB**	Ancient Bronze	2 17/32" center
	7085 •SS	Stainless Steel	2 17/32" center
	7086 •AB	Ancient Bronze	6 5/16" center
	7086 •SS	Stainless Steel	6 5/16" center

Appliance Pulls

	7087 •AB	Ancient Bronze	11 11/32" center
	7087 •SS	Stainless Steel	11 11/32" center
	7088 •AB	Ancient Bronze	17 5/8" center
	7088 •SS	Stainless Steel	17 5/8" center

❊ Overall width is 4"

French Farm Round Knob

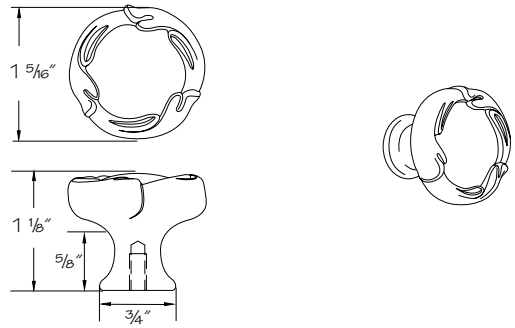

7113 •AB Ancient Bronze
7113 •AN Antique Nickel
7113 •STB Statuary Bronze

French Farm Cup Pull

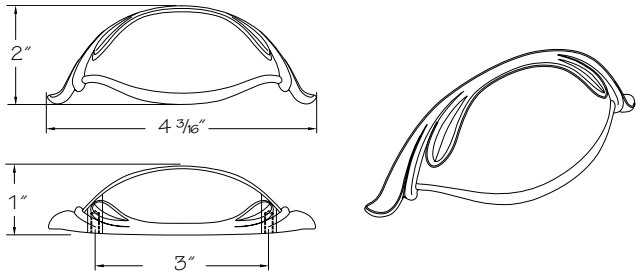

7114 •AB Ancient Bronze
7114 •AN Antique Nickel
7114 •STB Statuary Bronze

French Farm Pull

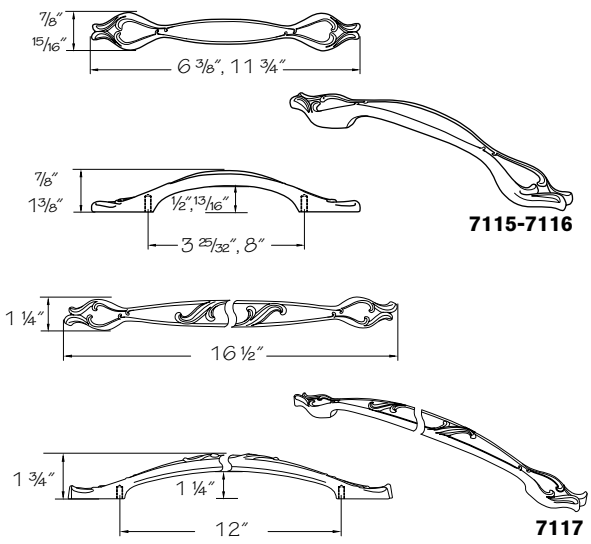

Standard Pulls

7115 ▪AB	Ancient Bronze	3 25/32" center
7115 ▪AN	Antique Nickel	3 25/32" center
7115 ▪STB	Statuary Bronze	3 25/32" center
7116 ▪AB	Ancient Bronze	8" center
7116 ▪AN	Antique Nickel	8" center
7116 ▪STB	Statuary Bronze	8" center

Appliance Pulls

7117 ▪AB	Ancient Bronze	12" center
7117 ▪AN	Antique Nickel	12" center
7117 ▪STB	Statuary Bronze	12" center

Empire Knob

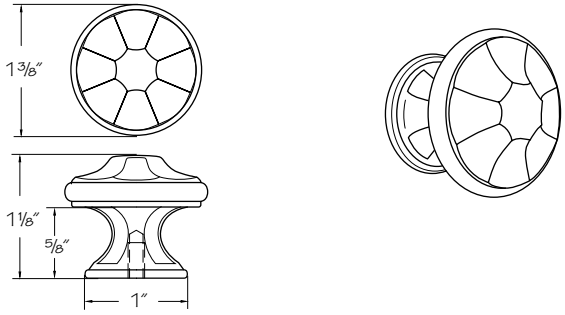

7118 ▪AN	Antique Nickel
7118 ▪PN	Polished Nickel

Empire Square Knob

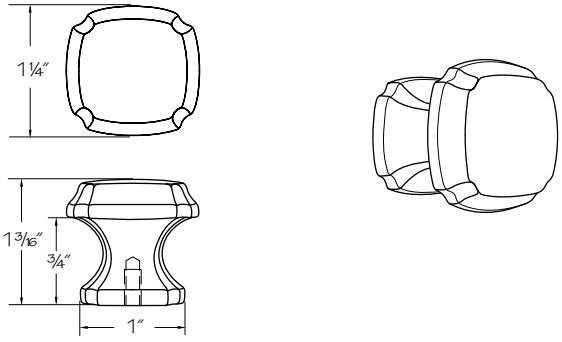

7119 ▪AN	Antique Nickel
7119 ▪PN	Polished Nickel

Empire Pull

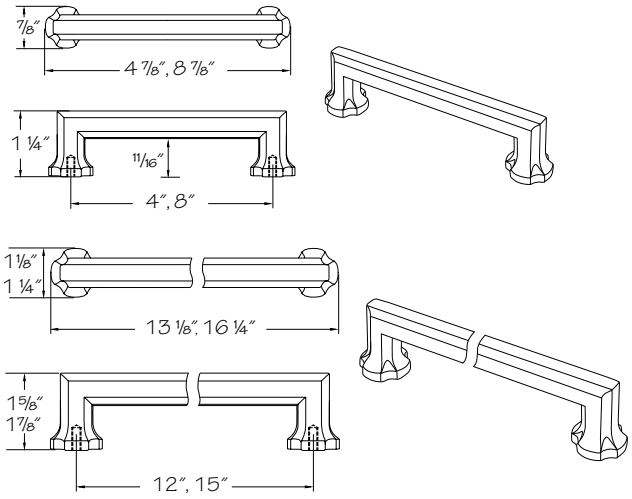

Standard Pulls

7120 •AN Antique Nickel 4″ center
7120 •PN Polished Nickel 4″ center
7121 •AN Antique Nickel 8″ center
7121 •PN Polished Nickel 8″ center

Appliance Pulls

7122 •AN Antique Nickel 12″ center
7122 •PN Polished Nickel 12″ center
7123 •AN Antique Nickel 15″ center
7123 •PN Polished Nickel 15″ center

Pearl Beaded Knob

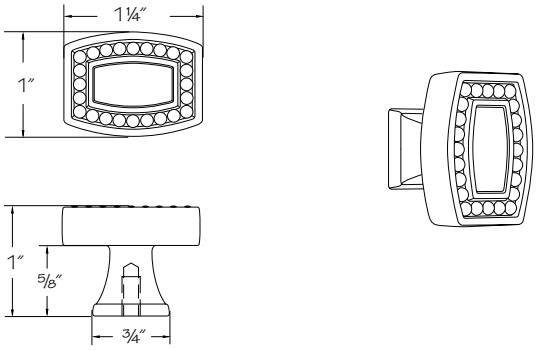

7124 •AN Antique Nickel
7124 •PN Polished Nickel

Pearl Beaded Pull

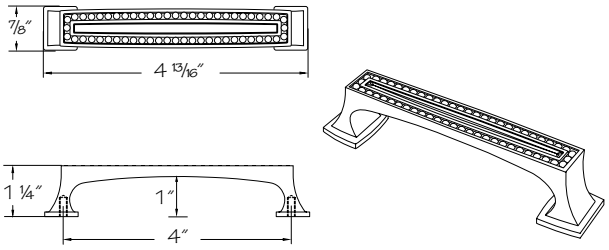

7125 •AN Antique Nickel
7125 •PN Polished Nickel

Crescent Knob

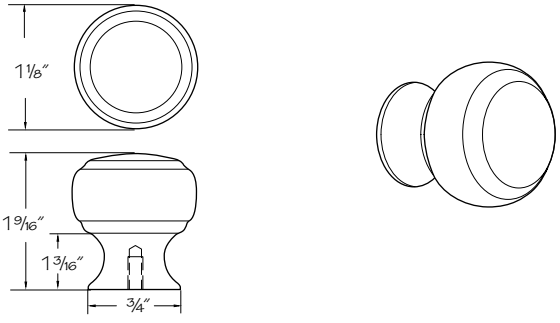

7126 •AN Antique Nickel
7126 •BB Brushed Bronze
7126 •PN Polished Nickel
7126 •STB Statuary Bronze

Crescent Pull

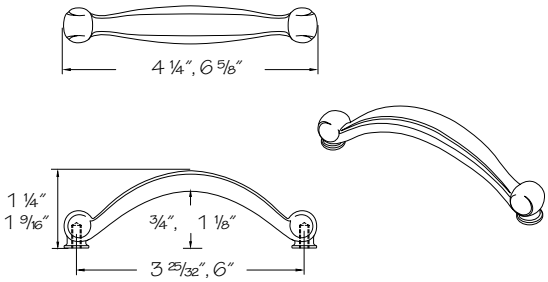

	Standard Pulls	
7127 •AN	Antique Nickel	3 25/32" center
7127 •BB	Brushed Bronze	3 25/32" center
7127 •PN	Polished Nickel	3 25/32" center
7127 •STB	Statuary Bronze	3 25/32" center
7128 •AN	Antique Nickel	6" center
7128 •BB	Brushed Bronze	6" center
7128 •PN	Polished Nickel	6" center
7128 •STB	Statuary Bronze	6" center

Baluster Knob

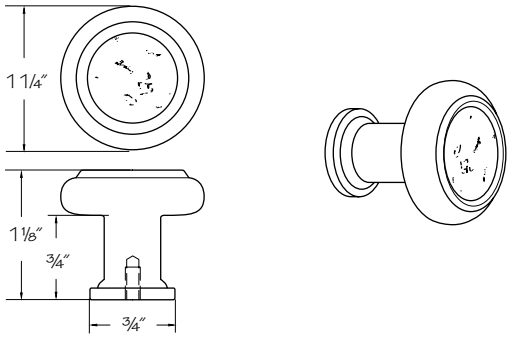

7131 •APC	Antique Pewter w/Copper
7131 •BB	Brushed Bronze
7131 •SN	Satin Nickel
7131 •STB	Statuary Bronze

Baluster Pull

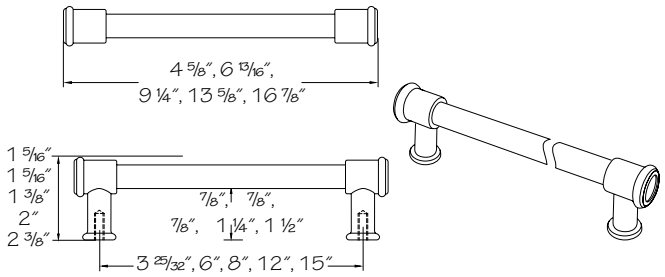

	Standard Pulls	
7132 •APC	Antique Pewter w/Copper	3 25/32" center
7132 •BB	Brushed Bronze	3 25/32" center
7132 •SN	Satin Nickel	3 25/32" center
7132 •STB	Statuary Bronze	3 25/32" center
7133 •APC	Antique Pewter w/Copper	6" center
7133 •BB	Brushed Bronze	6" center
7133 •SN	Satin Nickel	6" center
7133 •STB	Statuary Bronze	6" center
7134 •APC	Antique Pewter w/Copper	8" center
7134 •BB	Brushed Bronze	8" center
7134 •SN	Satin Nickel	8" center
7134 •STB	Statuary Bronze	8" center
	Appliance Pulls	
7135 •APC	Antique Pewter w/Copper	12" center
7135 •BB	Brushed Bronze	12" center
7135 •SN	Satin Nickel	12" center
7135 •STB	Statuary Bronze	12" center
7136 •APC	Antique Pewter w/Copper	15" center
7136 •BB	Brushed Bronze	15" center
7136 •SN	Satin Nickel	15" center
7136 •STB	Statuary Bronze	15" center

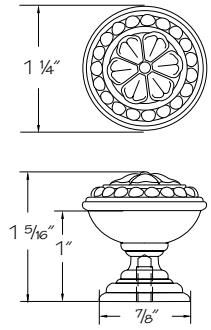

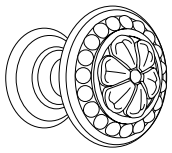

Heritage Knob

7137 •AB Ancient Bronze
7137 •AN Antique Nickel

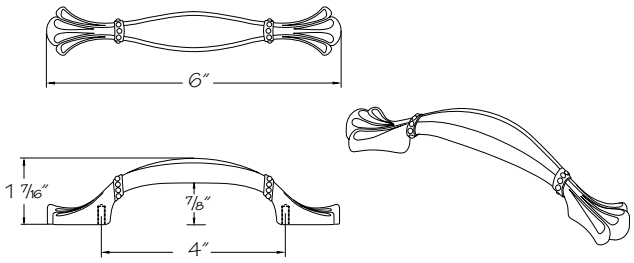

Heritage Pull

7138 •AB Ancient Bronze
7138 •AN Antique Nickel

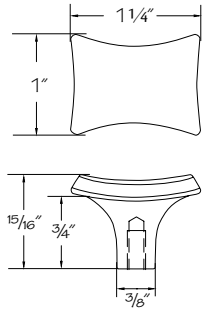

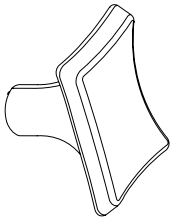

Sail Knob

7139 •SN Satin Nickel
7139 •STB Statuary Bronze

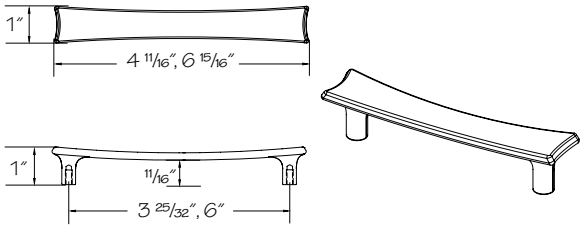

Sail Pull

7140 •SN	Satin Nickel	3 25/32" center
7140 •STB	Statuary Bronze	3 25/32" center
7141 •SN	Satin Nickel	6" center
7141 •STB	Statuary Bronze	6" center

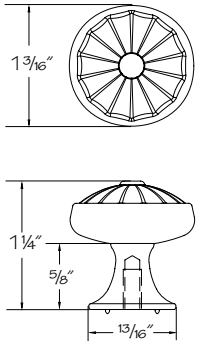

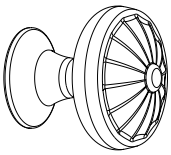

Heirloom Knob

7146 •STB Statuary Bronze

Heirloom Pull

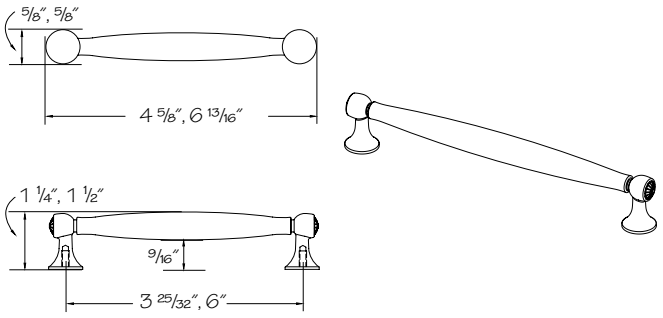

Standard Pulls

7147 ▪STB	Statuary Bronze	3 25/32" center
7148 ▪STB	Statuary Bronze	6" center

Simplicity Pull

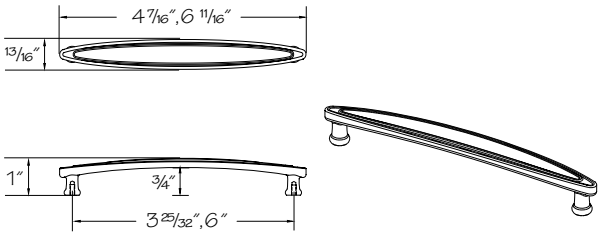

7151 ▪PN	Polished Nickel	3 25/32" center
7151 ▪DBB	Dark Brushed Bronze	3 25/32" center
7151 ▪STB	Statuary Bronze	3 25/32" center
7152 ▪PN	Polished Nickel	6" center
7152 ▪DBB	Dark Brushed Bronze	6" center
7152 ▪STB	Statuary Bronze	6" center

Simplicity Knob

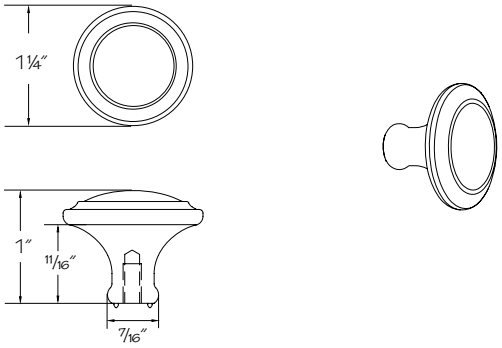

7153 ▪DBB	Dark Brushed Bronze
7153 ▪PN	Polished Nickel
7153 ▪STB	Statuary Bronze

Modern Pull

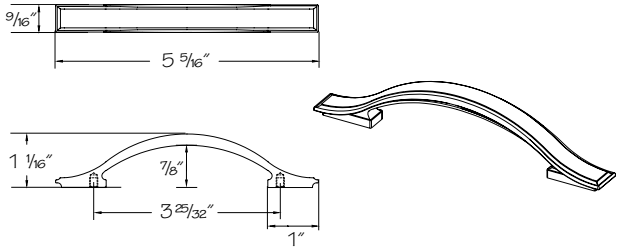

7154 ▪PC	Polished Chrome

Modern Cup Pull

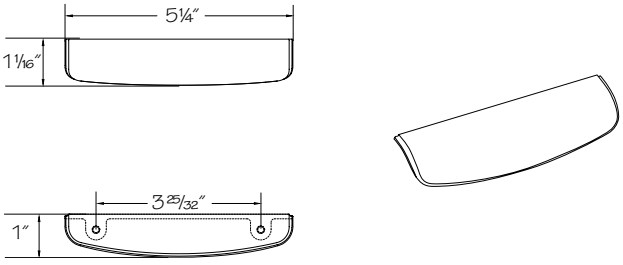

7156 ▪PC	Polished Chrome

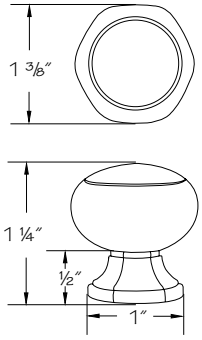

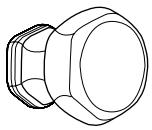

Federal Knob

7159 ▪AB Ancient Bronze
7159 ▪AN Antique Nickel

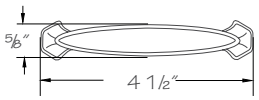

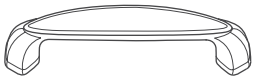

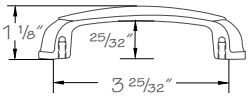

Federal Pull

7160 ▪AB Ancient Bronze
7160 ▪AN Antique Nickel

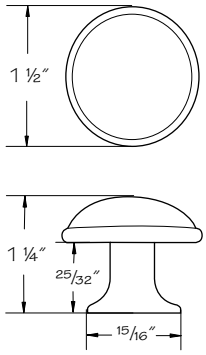



Trunk Knob

7161 ▪AP Antique Pewter
7161 ▪BP Blackened Pewter
7161 ▪MN Matte Nickel

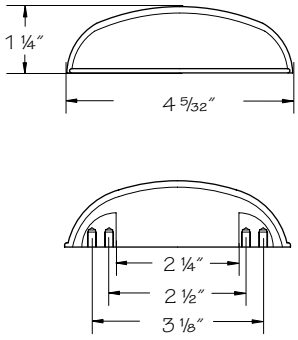



Trunk Cup Pull

7162 ▪AP Antique Pewter
7162 ▪BP Blackened Pewter
7162 ▪MN Matte Nickel

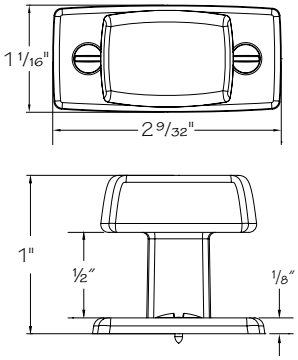

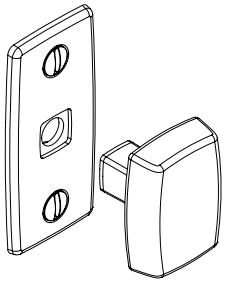

Fordham Knob

7165 ▪PN Polished Nickel
7165 ▪STB Statuary Bronze

Fordham Bin Pull

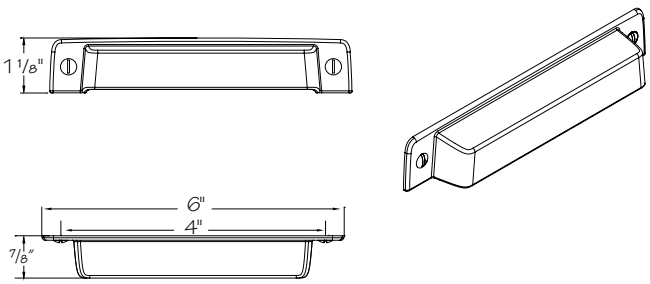

7166 •PN	Polished Nickel
7166 •STB	Statuary Bronze

Jericho Knob

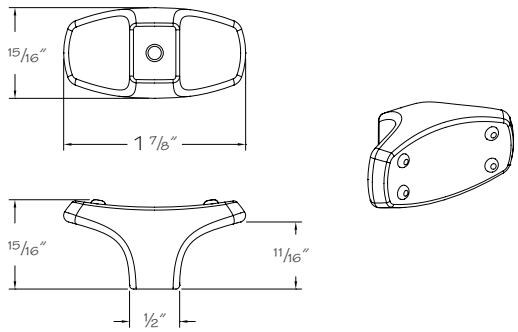

7167 •AP	Antique Pewter
7167 •PC	Polished Chrome

Jericho Pull

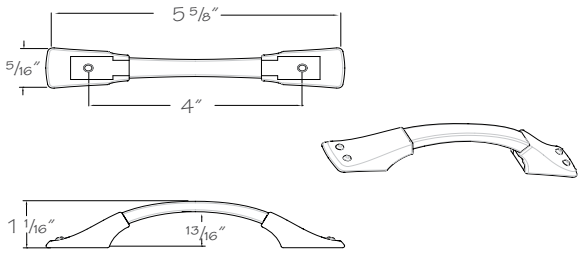

7168 •AP	Antique Pewter w/Soft Iron Center Bar
7168 •PC	Polished Chrome w/Matte Black Center Bar

Mode Knob

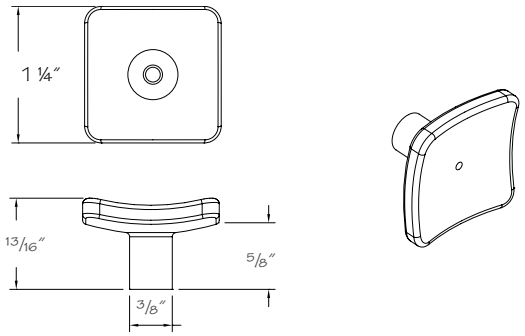

7169 •BB	Brushed Bronze
7169 •BBS	Brushed Brass
7169 •PC	Polished Chrome

Mode Pull

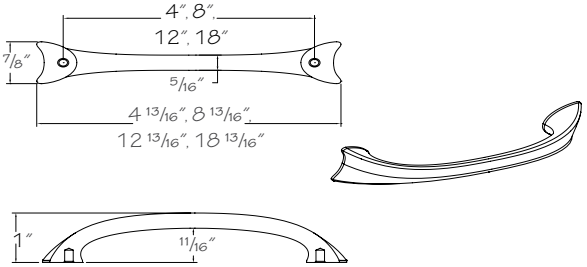

Standard Pulls

7170 •BB	Brushed Bronze	4" center
7170 •BBS	Brushed Brass	4" center
7170 •PC	Polished Chrome	4" center
7171 •BB	Brushed Bronze	8" center
7171 •BBS	Brushed Brass	8" center
7171 •PC	Polished Chrome	8" center

Appliance Pulls

7172 •BB	Brushed Bronze	12" center
7172 •BBS	Brushed Brass	12" center
7172 •PC	Polished Chrome	12" center
7173 •BB	Brushed Bronze	18" center
7173 •BBS	Brushed Brass	18" center
7173 •PC	Polished Chrome	18" center

Tide Bar Pull

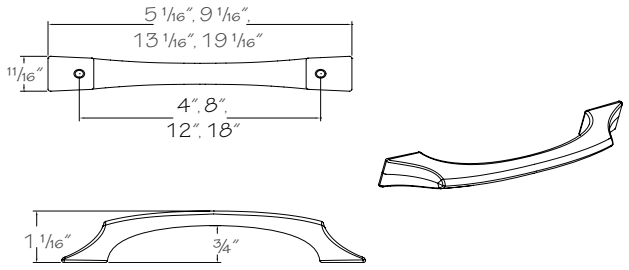

7174 •BB	Brushed Bronze	4" center
7174 •SC	Satin Chrome w/Polished Chrome Inset	4" center
7175 •BB	Brushed Bronze	8" center
7175 •SC	Satin Chrome w/Polished Chrome Inset	8" center
7176 •BB	Brushed Bronze	12" center
7176 •SC	Satin Chrome w/Polished Chrome Inset	12" center
7177 •BB	Brushed Bronze	18" center
7177 •SC	Satin Chrome w/Polished Chrome Inset	18" center

Waterton Knob

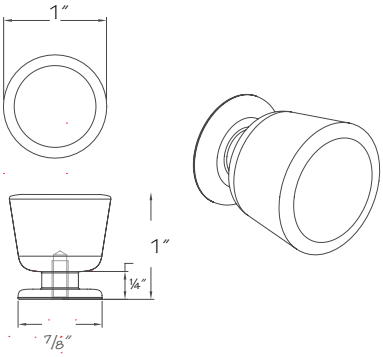

7183 •BBS	Brushed Brass
7183 •SN	Satin Nickel

Waterton Pull

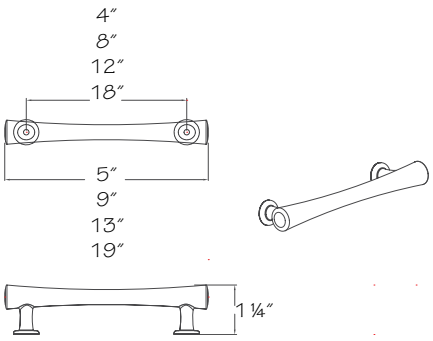

Standard Pulls		
7184 •BBS	Brushed Brass	4" center
7184 •SN	Satin Nickel	4" center
7185 •BBS	Brushed Brass	8" center
7185 •SN	Satin Nickel	8" center
Appliance Pulls		
7186 •BBS	Brushed Brass	12" center
7186 •SN	Satin Nickel	12" center
7187 •BBS	Brushed Brass	18" center
7187 •SN	Satin Nickel	18" center

Smithwick Knob

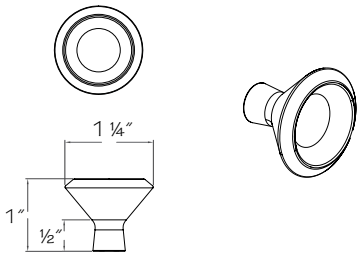

7188 •SN	Satin Nickel
7188 •SNW	Satin Nickel and White

Smithwick Pull

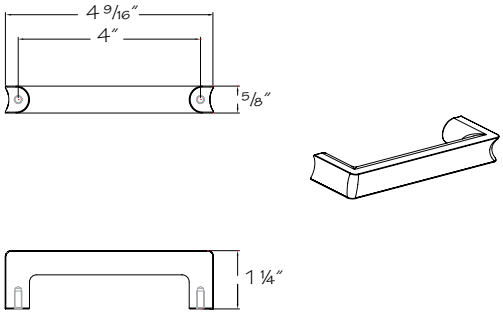

7189 •SN	Satin Nickel	4" center
7189 •SNW	Satin Nickel and White	4" center

Notes

Hardware

Construction Options and Modifications

PBDR	12
code	depth

Specifications subject to change without notice.

Whisper Touch™ Angle Restrictor Clip

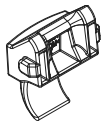

WTHARC

- Limits hinge opening angle to 86 degrees (+/- 2 degrees)
- ***Cannot*** be used in cabinets with installed accessories
- Used for:
  PH1516•SC — Whisper Touch™ Hinges - Full Overlay
  PH12C•SC — Whisper Touch™ Hinges - Half Overlay
  PHFM•SC — Whisper Touch™ Hinges - Face Mount
- Packaged and sold four per box
- ***Note:*** One clip per door is sufficient; however, one clip per hinge results in less deflection

Whisper Touch™ Deluxe Dovetailed Roll-Out Tray Mounting Block Kit

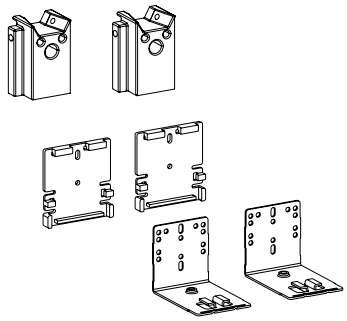

BWTDXROTK

- Includes mounting blocks, drawer glide mounting sleeves and fasteners
- Used for:
  Whisper Touch™ Deluxe Dovetailed Roll-out Tray runners
- Packaged and sold as a pair

Whisper Touch™ Drawer Runners

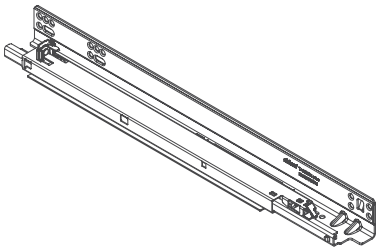

PBWTDR12
PBWTDR15
PBWTDR18
PBWTDR21
PBWTDR24

- 90 lbs. capacity
- Fully concealed
- Full extension runner, pulls out past the face frame
- Ball bearing operation
- Integrated mechanism closes drawers softly and quietly
- Packaged and sold as a pair
- ***Must*** order drawer clips separately

Whisper Touch™ Drawer Runners–Two Drawer Cabinets

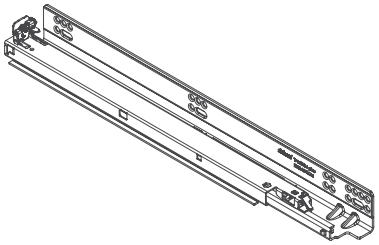

PBWTDR21 ▪2
PBWTDR24 ▪2

- 90 lbs. capacity
- Fully concealed
- Full extension runner, pulls out past the face frame
- Ball bearing operation
- Integrated mechanism closes drawers softly and quietly
- Used for:
  BPPS_▪2—Base Pot and Pan Organizer Two Drawer
  BDDC—Base Deep Drawer Combination
- Packaged and sold as a pair
- ***Must*** order drawer clips separately

New

Replacement Runners for Toe Kick Drawer

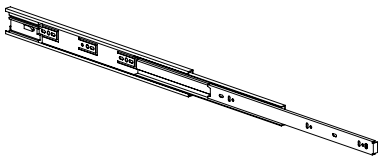

18" Deep
PDRTKD18
21" Deep
PDRTKD21
24" Deep
PDRTKD24

Grey color coding indicates new product, size or code.

- 100 lb. capacity
- Used for Toe Kick Drawer (TKD)
- Packaged and sold as a pair

Whisper Touch™ Base Pantry Pull-Out Runners

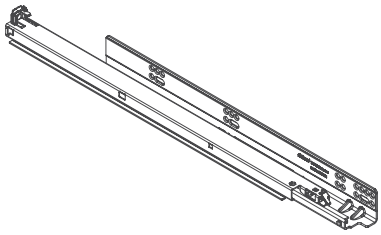

PBWTBPPDR24

- 90 lbs. capacity
- Fully concealed
- Full extension runner, pulls out past the face frame
- Ball bearing operation
- Integrated mechanism closes drawers softly and quietly
- Used for:
  BPP—Base Pantry Pull-out
  BLB—Base Liter Bottle
- Packaged and sold as a pair
- ***Must*** order drawer clips separately

Whisper Touch™ Vanity Base Pull-Out Runners

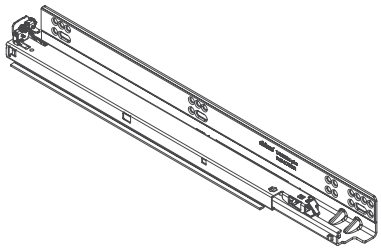

PBWTVBPDR21

- 90 lbs. capacity
- Fully concealed
- Full extension runner, pulls out past the face frame
- Ball bearing operation
- Integrated mechanism closes drawers softly and quietly
- Used for:
  VBP – Vanity Base Pull-Out
- Packaged and sold as a pair
- ***Must*** order drawer clips separately

Whisper Touch™ Deluxe Dovetailed Roll-Out Tray Drawer Runners

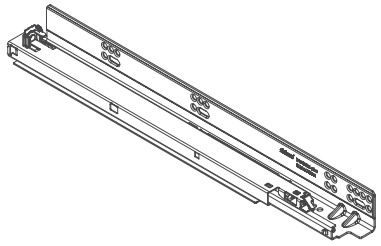

PBWTDXR18
PBWTDXR21
PBWTDXR24

- 90 lbs. capacity
- Fully concealed
- Full extension runner, pulls out past the face frame
- Ball bearing operation
- Integrated mechanism closes drawers softly and quietly
- Packaged and sold as a pair
- ***Must*** order drawer clips separately

Whisper Touch™ Drawer Clips

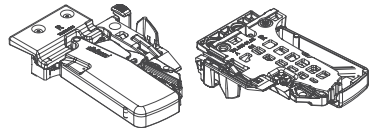

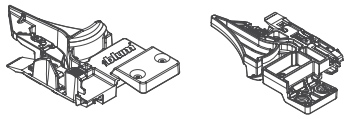

BOX -BWTDC
- Box of ten; five left and five right

PBWTDC
- Packaged and sold as a pair

PBWTDC -S
- Packaged and sold as a pair
- Used for:
  BLB — Base Liter Bottle
  BPP — Base Pantry Pull-out
  VBP — Vanity Base Pull-out
  VSB36.2D — Vanity Sink Base

Full Extension Drawer Runner

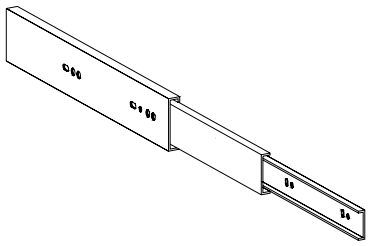

❊ **PFDR12**
PFDR15
PFDR18
PFDR21
PFDR24

❊ Used for:
DS—Drawer Storage
FD—Furniture Drawer
FW—Furniture Wall

- 75 lbs. capacity
- Full extension runner, pulls out past the face frame
- Packaged and sold as a pair
- Used for:
  DDFD—Desk Double File Drawer
  WMSP—Wall Multi-Storage Pantry

Deluxe Roll-out Tray Extension Tail

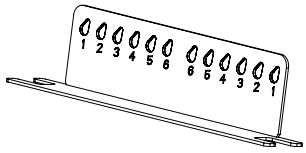

PBDRET

- Required when installing Deluxe Dovetailed Roll-out Trays (DXROT) and Chrome Deluxe Roll-out Trays (SDXROT) in cabinets with modified depth. ***Not*** Necessary for 24", 21" and 18" deep cabinets

Door Stop Kit

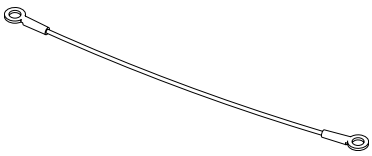

DSTK

- Nylon coated stainless wire rope
- Stainless eyes with aluminum collar
- Mounting hardware included

Adjustable Shelf Clips

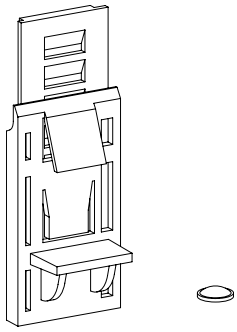

BOX ▪ASC

- Adjustable clear plastic clip locks in eight positions for approximately 1 5/8" of vertical adjustment
- Includes slip resistant pads
- Wood shelves may need to be trimmed to accommodate the thickness of this clip
- Ten per box

Shelf Clips

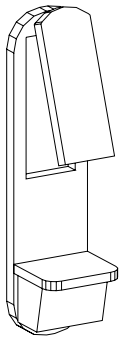

BOX ▪SC12 For 1/2" thick shelves
BOX ▪SC34 For 3/4" thick shelves

- Clear plastic locking clip
- Ten per box

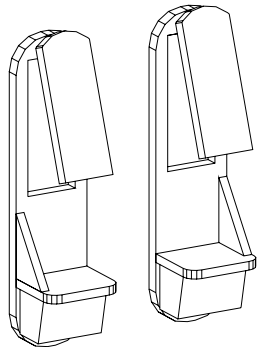

Front Shelf Clips

BOX •SCF

- Clear plastic locking clip
- Plastic front edge restraint
- Ten per box (Five left and five right)

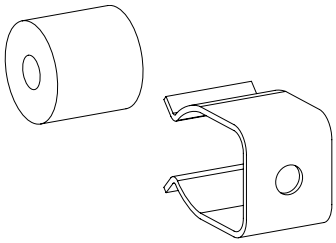

False Front Clips

BOX •SFFC

- Mounting hardware included
- Ten per box

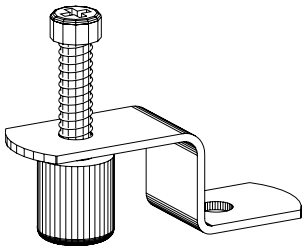

Door Insert Clips

BOX •IC

- Burnished brass finish
- Mounting screws included
- Eight per box

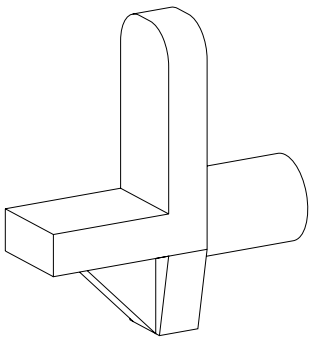

Furniture Shelf Rests

BOX •FSR

- Satin chrome
- For use in any cabinet
- Ten per box

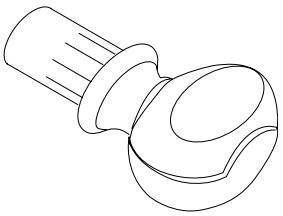

Glass Shelf Rests

BOX •GSR

- Polished chrome finish with slip resistant pad
- Twelve per box

Hardware Screws

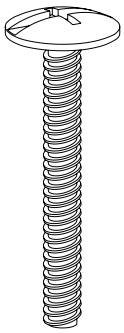

BOX ▪HS

- Specify door or drawer and hardware type
- Order Example: BOX▪HSDOOR for 205 hardware
- Ten per box

Installation Screws

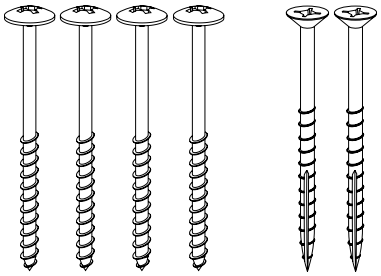

BOX ▪IS

- Each pack includes 4 mounting screws and 2 cabinet-to-cabinet screws
- Mounting screws are 2 3/4" long
- Cabinet-to-cabinet screws are 2 1/2" long
- Ten packs per box

Permaset Bumpers

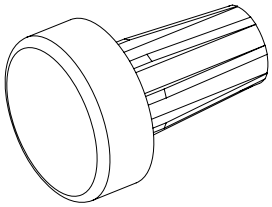

BOX ▪PSDB

- Opaque "Eversoft" rubber door bumpers
- Ten per box

Glass Insert Retainer Strip



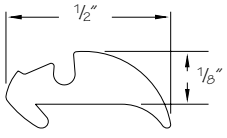

MDRS

- Holds decorative glass in a door frame
- Used with the following decorative glass inserts: Bistro (BIS), Ravenna (RAV), and Shadow (SHW)
- Specify length needed, in feet

Whisper Touch™ Hinges–Full Overlay

PH1516FO▪SC

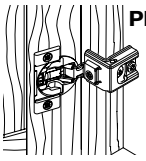

PH34FO▪SC

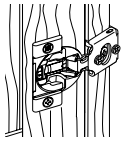

PH1516FO ▪SC

▲ **PH34FO ▪SC**

▲ *For B6 R or L.FO*

Grey color coding indicates new product, size or code.

- Six-way adjustable hinge
- Nickel plated finish
- Integrated mechanism closes doors softly and quietly
- On/off switch adjusts closing speed for light and heavy doors
- Packaged and sold as a pair

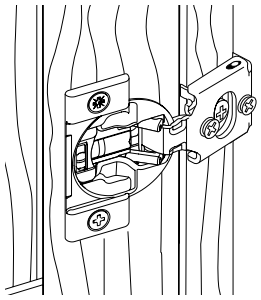

Whisper Touch™ Hinges– 1/2" Overlay

PH12C ▪SC

- Six-way adjustable hinge
- Nickel plated finish
- Integrated mechanism closes doors softly and quietly
- On/off switch adjusts closing speed for light and heavy doors
- Packaged and sold as a pair

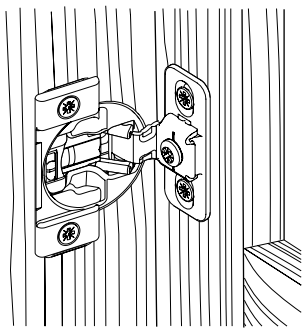

Whisper Touch™ Hinges–Face Mount

PHFM ▪SC

- Four-way adjustable hinge
- Nickel plated finish
- Integrated mechanism closes doors softly and quietly
- On/off switch adjusts closing speed for light and heavy doors
- Used for Oven Cabinets (OC) with 3" frame stiles in the door section
- Packaged and sold as a pair

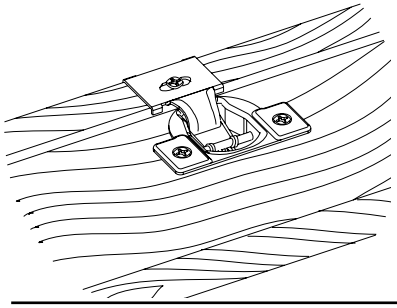

Hinges–Partial Overlay Concealed

PH12PO

- Nickel plated finish
- Packaged and sold as a pair

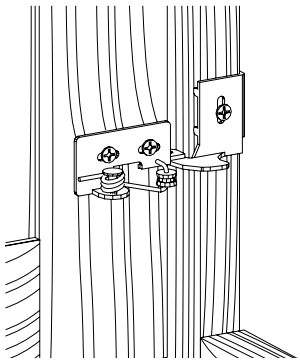

Knife Hinges

PH12K

- Burnished brass finish
- Knife hinge capable of opening 180°
- Packaged and sold as a pair

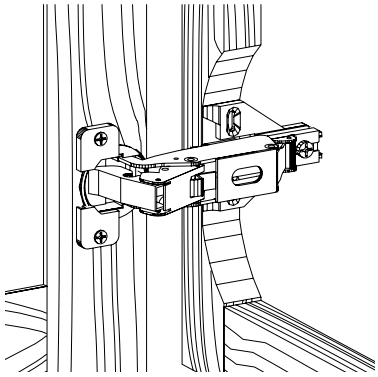

Hinges–Partial Or Full Overlay Easy Reach

PH170EZ

- Nickel plated finish
- Packaged and sold as a pair
- Used for all Easy Reach (EZR) cabinets

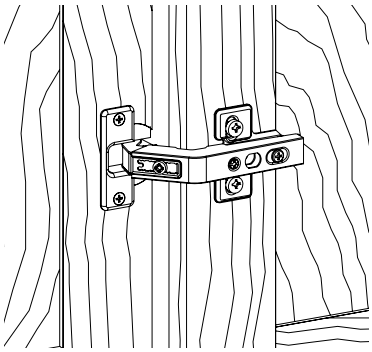

Hinges–Bifold

PHBF

- Nickel plated finish
- Packaged and sold as a pair

Vinyl Edgebanding

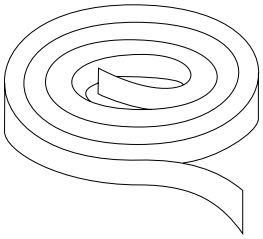

EDB

- 7/8" wide
- Edgebanding color will match the cabinet box color of the selected door style and finish
- Sold by the foot (quantity ordered will equal the number of feet needed)
- ***Not*** self-adhesive; installation will require contact cement

Touch-Up

Construction Options and Modifications

QST	WG
code	finish

Specifications subject to change without notice.

Cabinet Care Kit



CCK

- Kit includes: 8 oz. Polish and Cleaner; 12" x 12" Dusting Cloth and Polish/Cleaner Cloth

For complete care of your cabinets, we recommend ordering the Touch-Up in the cabinet color(s). If your design uses Whisper Touch™ Hinges, you may also want to order the Whisper Touch™ Angle Restrictor Clip (WTHARC)

Cutting Board Finish

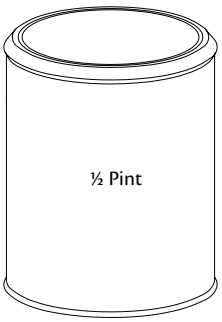

CBF 1/2 Pint

- Specially formulated for food safe application to all cutting board surfaces

Polish

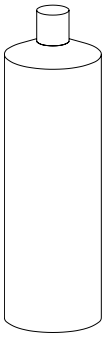

KMP

- 16 oz. bottle
- Industrial grade polish for wood, brass and vinyl

Aerosol Can

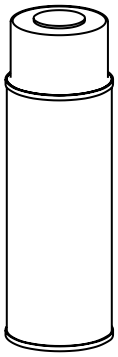

- Matches base color only
- 13 oz. can
- ***Cannot*** be used to touch up High-Gloss Foil door styles; matte sheen will match box and accessories that are ***not*** High-Gloss

	Clear Finishes	
	ACNA	Natural
	ACSDE	Suede (Matte)
	Color Finishes	
▲	**ACAB**	Autumn Blush, Autumn Blush Suede, Burnished Autumn Blush
▲	**ACD78**	Baltic, Baltic Suede
	ACIG	Biscotti w/Cocoa Glaze
▲	**ACBO**	Biscotti, Biscotti Suede, Biscotti w/Cinder Glaze, Vintage Biscotti
▲	**ACE69**	Bonsai, Bonsai Suede
▲	**ACE67**	Burmese, Burmese Suede
▲	**ACCT**	Cabernet, Cabernet Suede, Burnished Cabernet, Cabernet w/Onyx Glaze
▲	**ACD81**	Cannon Grey, Cannon Grey Suede
	ACVG	Canvas w/Cocoa Glaze
▲	**ACCV**	Canvas, Canvas Suede, Canvas w/Cinder Glaze, Vintage Canvas
▲	**ACC29**	Chai, Chai Suede, Chai w/Cinder Glaze, Chai w/Cocoa Glaze, Vintage Chai
▲	**ACCN**	Chestnut, Chestnut Suede, Chestnut w/Onyx Glaze, Burnished Chestnut
	ACEG	Chocolate w/Ebony Glaze
▲	**ACCZ**	Chocolate, Chocolate Suede, Burnished Chocolate
▲	**ACCA**	Cinnamon, Cinnamon Suede, Burnished Cinnamon, Cinnamon w/Onyx Glaze
▲	**ACCO**	Cognac, Cognac Suede
	ACCS	Cream
	ACDWCG	Dove White w/Cocoa Glaze
▲	**ACWH**	Dove White, Dove White Suede, Dove White w/Cinder Glaze, Vintage Dove White
▲	**ACFN**	Fawn, Fawn Suede
▲	**ACGN**	Ginger, Ginger Suede, Ginger w/Sable Glaze, Burnished Ginger
▲	**ACGY**	Greyloft, Greyloft Suede, Greyloft w/Sable Glaze, Vintage Greyloft
▲	**ACC16**	Hazel, Hazel Suede
▲	**ACHS**	Honey Spice, Honey Spice Suede
▲	**ACHK**	Husk, Husk Suede
▲	**ACKA**	Kaffé, Kaffé Suede
▲	**ACE63**	Lagoon, Lagoon Suede
▲	**ACD90**	Linen, Linen Suede, Linen w/Cinder Glaze, Linen w/Cocoa Glaze, Vintage Linen
▲	**ACMD**	Midnight, Midnight Suede, Midnight w/Onyx Glaze, Vintage Midnight
▲	**ACE58**	Molasses, Molasses Suede
▲	**ACD98**	Moonshine, Moonshine Suede, Moonshine w/Cinder Glaze, Moonshine w/Cocoa Glaze, Vintage Moonshine
	ACMSCG	Mushroom w/Cocoa Glaze
▲	**ACMS**	Mushroom, Mushroom Suede, Mushroom w/Cinder Glaze, Vintage Mushroom
▲	**ACON**	Onyx, Onyx Suede, Vintage Onyx
▲	**ACPBG**	Pebble Grey, Pebble Grey Suede, Pebble Grey w/Cocoa Glaze, Vintage Pebble Grey
▲	**ACPC**	Peppercorn, Peppercorn Suede
▲	**ACPR**	Praline, Praline Suede, Praline w/Onyx Glaze
▲	**ACSAD**	Saddle, Saddle Suede
▲	**ACE65**	Surfside, Surfside Suede
▲	**ACSL**	Slate, Slate Suede
	ACSU	Sunset

▲ ***Must*** use Suede aerosol with Suede finishes

Grey color coding indicates new product, size or code.

Paint

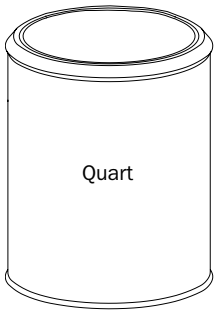

- Includes one qt. of paint
- ***Cannot*** be used to touch up High-Gloss Foil door styles; matte sheen will match box and accessories that are ***not*** High-Gloss

▲ **QPE06**	Aged Concrete
▲ **QPE05**	Aged Papyrus
▲ **QPE07**	Aged River Rock
▲ **QPBO**	Biscotti, Biscotti Suede, Vintage Biscotti
▲ **QPE69**	Bonsai, Bonsai Suede
▲ **QPE67**	Burmese, Burmese Suede
▲ **QPCV**	Canvas, Canvas Suede, Vintage Canvas
QPCS	Cream
▲ **QPC29**	Chai, Chai Suede, Vintage Chai
▲ **QPWH**	Dove White, Dove White Suede, Vintage Dove White, White
▲ **QPGY**	Greyloft, Greyloft Suede
▲ **QPE63**	Lagoon, Lagoon Suede
▲ **QPD90**	Linen, Linen Suede, Vintage Linen
▲ **QPMD**	Midnight, Midnight Suede
▲ **QPD98**	Moonshine, Moonshine Suede, Vintage Moonshine
▲ **QPMS**	Mushroom, Mushroom Suede, Vintage Mushroom
▲ **QPON**	Onyx, Onyx Suede, Vintage Onyx
▲ **QPPBG**	Pebble Grey, Pebble Grey Suede, Vintage Pebble Grey
▲ **QPE65**	Surfside, Surfside Suede

Includes paint, accent and topcoat

QPBOCDG	Biscotti w/Cinder Glaze
QPIG	Biscotti w/Cocoa Glaze
QPCVCDG	Canvas w/Cinder Glaze
QPVG	Canvas w/Cocoa Glaze
QPC32	Chai w/Cinder Glaze
QPC30	Chai w/Cocoa Glaze
QPDWCDG	Dove White w/Cinder Glaze
QPDWCG	Dove White w/Cocoa Glaze
QPGYSG	Greyloft w/Sable Glaze
QPD96	Linen w/Cinder Glaze
QPD94	Linen w/Cocoa Glaze
QPE04	Moonshine w/Cinder Glaze
QPE03	Moonshine w/Cocoa Glaze
QPMDOG	Midnight w/Onxy Glaze
QPMSCDG	Mushroom w/Cinder Glaze
QPMSCG	Mushroom w/Cocoa Glaze
QPPBGCG	Pebble Grey w/Cocoa Glaze

▲ ***Must*** use Suede aerosol with Suede finishes

Grey color coding indicates new product, size or code.

Stain Kit

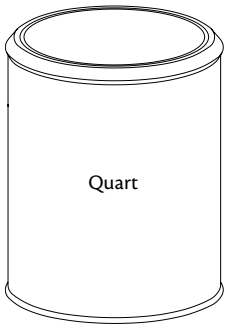

- Sold in complete kits only; individual components ***not*** available
- Includes application instructions

Topcoat

QSTNA	Natural top coat
QSTSDE	Suede (Matte) topcoat

Includes stain

▲ **QSTAB**	Autumn Blush, Autumn Blush Suede
▲ **QSTD78**	Baltic, Baltic Suede
▲ **QSTCT**	Cabernet, Cabernet Suede
▲ **QSTD81**	Cannon Grey, Cannon Grey Suede
▲ **QSTCN**	Chestnut, Chestnut Suede
QSTCC	Chocolate
▲ **QSTCA**	Cinnamon, Cinnamon Suede
▲ **QSTCO**	Cognac, Cognac Suede
▲ **QSTFN**	Fawn, Fawn Suede
▲ **QSTC19**	Ginger, Ginger Suede
▲ **QSTC16**	Hazel, Hazel Suede
▲ **QSTHS**	Honey Spice, Honey Spice Suede
▲ **QSTHK**	Husk, Husk Suede
▲ **QSTKA**	Kaffé, Kaffé Suede
▲ **QSTE58**	Molasses, Molasses Suede
▲ **QSTPC**	Peppercorn, Peppercorn Suede
▲ **QSTPR**	Praline, Praline Suede
▲ **QSTSAD**	Saddle, Saddle Suede
▲ **QSTSL**	Slate, Slate Suede
▲ **QSTSU**	Sunset, Sunset Suede

Includes stain, accent color and topcoat

QSTCZ	Chocolate Suede
QSTABOG	Autumn Blush w/Onyx Stain
QSTCTOG	Cabernet w/Onyx Glaze
QSTCNOG	Chestnut w/Onyx Glaze
QSTEG	Chocolate w/Ebony Glaze
QSTCAOG	Cinnamon w/Onyx Glaze
QSTGN	Ginger w/Sable Glaze
QSTPROG	Praline w/Onyx Glaze

Includes stain, burnishing and topcoat

QSTBA	Burnished Autumn Blush
QSTBT	Burnished Cabernet
QSTBH	Burnished Chestnut
QSTBL	Burnished Chocolate
QSTBCA	Burnished Cinnamon
QSTBE	Burnished Ginger
QSTBP	Burnished Praline

▲ ***Must*** use Suede aerosol with Suede finishes

Grey color coding indicates new product, size or code.

Touch-Up Kit

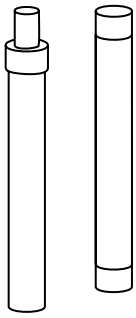

- Kit includes: Fill Stick (FS) and Touch-Up Pen (TP)
- ***Cannot*** be used to touch up High-Gloss Foil door styles; matte sheen will match box and accessories that are ***not*** High-Gloss

TUKE06	Aged Concrete
TUKE05	Aged Papyrus
TUKE07	Aged River Rock
TUKAB	Autumn Blush, Autumn Blush Suede, Burnished Autumn Blush, Autumn Blush w/Onyx Glaze
TUKD78	Baltic, Baltic Suede
TUKIG	Biscotti w/Cocoa Glaze
TUKBO	Biscotti, Biscotti Suede, Biscotti w/Cinder Glaze, Vintage Biscotti
TUKCT	Cabernet, Cabernet Suede, Burnished Cabernet, Cabernet w/Onyx Glaze
TUKD81	Cannon Grey, Cannon Grey Suede
TUKE69	Bonsai, Bonsai Suede
TUKE67	Burmese, Burmese Suede
TUKVG	Canvas w/Cocoa Glaze
TUKCV	Canvas, Canvas Suede, Canvas w/Cinder Glaze, Vintage Canvas
TUKC29	Chai, Chai Suede, Chai w/Cinder Glaze, Chai w/Cocoa Glaze, Vintage Chai
TUKCN	Chestnut, Chestnut Suede, Burnished Chestnut, Chestnut w/Onyx Glaze
TUKEG	Chocolate w/Ebony Glaze
TUKCZ	Chocolate, Chocolate Suede, Burnished Chocolate
TUKCA	Cinnamon, Cinnamon Suede, Burnished Cinnamon, Cinnamon w/Onyx Glaze
TUKCO	Cognac, Cognac Suede
TUKCS	Cream
TUKDWCG	Dove White w/Cocoa Glaze
TUKWH	Dove White, Dove White Suede, Dove White w/Cinder Glaze, White
TUKFN	Fawn, Fawn Suede
TUKGN	Ginger, Ginger Suede, Ginger w/Sable Glaze, Burnished Ginger
TUKGY	Greyloft, Greyloft Suede, Greyloft w/Sable Glaze, Vintage Greyloft
TUKC16	Hazel, Hazel Suede
TUKHS	Honey Spice, Honey Spice Suede
TUKHK	Husk, Husk Suede
TUKE63	Lagoon
TUKD90	Linen, Linen Suede, Linen w/Cinder Glaze, Linen w/Cocoa Glaze, Vintage Linen
TUKKA	Kaffé, Kaffé Suede
TUKE58	Molasses, Molasses Suede
TUKMD	Midnight, Midnight Suede, Midnight w/Onyx Glaze, Vintage Midnight
TUKD98	Moonshine, Moonshine Suede, Moonshine w/Cinder Glaze, Moonshine w/Cocoa Glaze, Vintage Moonshine
TUKMS	Mushroom, Mushroom Suede, Mushroom w/Cinder Glaze, Mushroom w/Cocoa Glaze, Vintage Mushroom
TUKNA	Natural
TUKON	Onyx, Onyx Suede, Vintage Onyx
TUKPBG	Pebble Grey, Pebble Grey Suede, Pebble Grey w/Cocoa Glaze, Vintage Pebble Grey
TUKPC	Peppercorn, Peppercorn Suede
TUKPR	Praline, Praline Suede, Praline w/Onyx Glaze
TUKSAD	Saddle, Saddle Suede
TUKSL	Slate, Slate Suede
TUKSU	Sunset, Sunset Suede
TUKE65	Surfside, Surfside Suede

Grey color coding indicates new product, size or code.

Touch-Up Pen



- ***Cannot*** be used to touch up High-Gloss Foil door styles; matte sheen will match box and accessories that are ***not*** High-Gloss

TPE06	Aged Concrete
TPE05	Aged Papyrus
TPE07	Aged River Rock
TPAB	Autumn Blush, Autumn Blush Suede, Burnished Autumn Blush, Autumn Blush w/Onyx Glaze
TPD78	Baltic, Baltic Suede
TPIG	Biscotti w/Cocoa Glaze
TPBO	Biscotti, Biscotti Suede, Biscotti w/Cinder Glaze, Vintage Biscotti
TPE69	Bonsai, Bonsai Suede
TPE67	Burmese, Burmese Suede
TPCT	Cabernet, Cabernet Suede, Burnished Cabernet, Cabernet w/Onyx Glaze
TPD81	Cannon Grey, Cannon Grey Suede
TPVG	Canvas w/Cocoa Glaze
TPCV	Canvas, Canvas Suede, Canvas w/Cinder Patina, Vintage Canvas
TPC29	Chai, Chai Suede, Chai w/Cinder Glaze, Chai w/Cocoa Glaze, Vintage Chai
TPCN	Chestnut, Chestnut Suede, Burnished Chestnut, Chestnut w/Onyx Glaze
TPEG	Chocolate w/Ebony Glaze
TPCZ	Chocolate, Chocolate Suede, Burnished Chocolate
TPCA	Cinnamon, Cinnamon Suede, Burnished Cinnamon, Cinnamon w/Onyx Glaze
TPCO	Cognac, Cognac Suede
TPCS	Cream
TPDWCG	Dove White w/Cocoa Glaze
TPWH	Dove White, Dove White Suede, Dove White w/Cinder Glaze, Vintage Dove White, White
TPFN	Fawn, Fawn Suede
TPGN	Ginger, Ginger Suede, Ginger w/Sable Glaze, Burnished Ginger
TPGY	Greyloft, Greyloft Suede, Greyloft w/Sable Glaze, Vintage Greyloft
TPC16	Hazel, Hazel Suede
TPHS	Honey Spice, Honey Spice Suede
TPHK	Husk, Husk Suede
TPD90	Linen, Linen Suede, Linen w/Cinder Glaze, Linen w/Cocoa Glaze, Vintage Linen
TPKA	Kaffé, Kaffé Suede
TPE63	Lagoon, Lagoon Suede
TPD98	Moonshine, Moonshine Suede, Moonshine w/Cinder Glaze, Moonshine w/Cocoa Glaze
TPMD	Midnight, Midnight Suede, Midnight w/Onyx Glaze, Vintage Midnight
TPE58	Molasses
TPMS	Mushroom, Mushroom Suede, Mushroom w/Cinder Glaze, Mushroom w/Cocoa Glaze, Vintage Mushroom
TPNA	Natural
TPON	Onyx, Onyx Suede, Vintage Onyx
TPPBG	Pebble Grey, Pebble Grey Suede, Pebble Grey w/Cocoa Glaze, Vintage Pebble Grey
TPPC	Peppercorn, Peppercorn Suede
TPPR	Praline, Praline Suede, Praline w/Onyx Glaze
TPSAD	Saddle, Saddle Suede
TPSL	Slate, Slate Suede
TPSU	Sunset, Sunset Suede
TPE65	Surfside, Surfside Suede

Grey color coding indicates new product, size or code.

Fill Stick

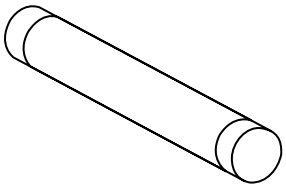

- ***Cannot*** be used to touch up High-Gloss Foil door styles; matte sheen will match box and accessories that are ***not*** High-Gloss

FSE06	Aged Concrete
FSE05	Aged Papyrus
FSE07	Aged River Rock
FSAB	Autumn Blush, Autumn Blush Suede, , Autumn Blush w/Onyx Glaze, Burnished Autumn Blush
FSD87	Baltic, Baltic Suede
FSIG	Biscotti w/Cocoa Glaze
FSBO	Biscotti, Biscotti Suede, Biscotti w/Cinder Glaze, Vintage Biscotti
FSE69	Bonsai, Bonsai Suede
FSE67	Burmese, Burmese Suede
FSCT	Cabernet, Cabernet Suede, Burnished Cabernet, Cabernet w/Onyx Glaze
FSVG	Canvas w/Cocoa Glaze
FSD81	Cannon Grey, Cannon Grey Suede
FSCV	Canvas, Canvas Suede, Canvas w/Cinder Glaze, Vintage Canvas
FSC29	Chai, Chai Suede, Chai w/Cinder Glaze, Chai w/Cocoa Glaze, Vintage Chai
FSCN	Chestnut, Chestnut Suede, Chestnut w/Onyx Glaze, Burnished Chestnut
FSEG	Chocolate w/Ebony Glaze
FSCZ	Chocolate, Chocolate Suede, Burnished Chocolate
FSCA	Cinnamon, Cinnamon Suede, Burnished Cinnamon, Cinnamon w/Onyx Glaze
FSCO	Cognac, Cognac Suede
FSCS	Cream
FSDWCG	Dove White w/Cocoa Glaze
FSWH	Dove White, Dove White Suede, Dove White w/Cinder Glaze, Vintage Dove White, White
FSFN	Fawn, Fawn Suede
FSGN	Ginger, Ginger Suede, Ginger w/Sable Glaze, Burnished Ginger
FSGY	Greyloft, Greyloft Suede, Greyloft w/Sable Glaze, Vintage Greyloft
FSC16	Hazel, Hazel Suede
FSHS	Honey Spice, Honey Spice Suede
FSHK	Husk, Husk Suede
FSINT	Interior
FSKA	Kaffé, Kaffé Suede
FSE63	Lagoon, Lagoon Suede
FSD90	Linen, Linen Suede, Linen w/Cinder Glaze, Linen w/Cocoa Glaze, Vintage Linen
FSMD	Midnight, Midnight Suede, Midnight w/Onyx Glaze, Vintage Midnight
FSMS	Mushroom, Mushroom Suede, Mushroom w/Cinder Glaze, Mushroom w/Cocoa Glaze, Vintage Mushroom
FSD98	Moonshine, Moonshine Suede, Moonshine w/Cinder Glaze, Moonshine w/Cocoa Glaze, Vintage Moonshine
FSNA	Natural
FSON	Onyx, Onyx Suede, Vintage Onyx
FSPBG	Pebble Grey, Pebble Grey Suede, Pebble Grey w/Cocoa Glaze, Vintage Pebble Grey
FSPC	Peppercorn, Peppercorn Suede
FSPR	Praline, Praline Suede, Praline w/Onyx Glaze
FSSAD	Saddle, Saddle Suede
FSSL	Slate, Slate Suede
FSSU	Sunset, Sunset Suede
FSE65	Surfside, Surfside Suede
FSE58	Molasses, Molasses Suede

Grey color coding indicates new product, size or code.

How to Use This Section

This guide allows you to choose from a complete line of doors and drawer fronts for replacement as well as special applications such as appliance fronts, whirlpool skirts, wainscoting, etc.

This part lists all replacement doors and drawer fronts by their nomenclature. They are sorted by their nominal height (last two numbers of the nomenclature) from largest to smallest.

To choose doors and drawer fronts for special decorative applications, use the Sizes section and look in the appropriate overlay column to determine which doors and drawer fronts are needed. Then look up the door(s) and drawer front(s) in the Price List catalog under the price column number appropriate to your door style.

To find replacement drawer boxes and replacement operational end doors in 2020 go to: Accessories>Replacement Parts>Replacement Part. Right click and select Specs to view.

Replacement Door & Drawer Front Information

Replacement doors may be ordered for wall or base application. When ordering, specify door style, hinging and •W (wall) or •B (base). Any arch doors ordered as •B will be shipped in a square design.

Example: *You need a replacement door for a wall 1830, hinged left.*

Order: RD1830L•W

Replacement doors are prepared for hinges. Replacement door and drawer fronts are automatically drilled for PermaSet bumpers. If a door is specified for no hinge (NH), the door is drilled in all four corners for bumpers (bumpers are included) and will also receive a single cup hinge bore for internal tracking purposes.

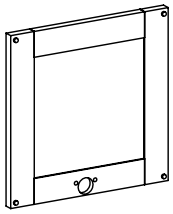

Replacement doors with glass inserts or mullion inserts installed are available on doors 12″ or wider up to 42″ high.
To order, determine the replacement door(s) required and add desired glass insert or mullion insert.

Example: *You need a Chateau glass insert for a wall 1830, hinged left.*

Order: RD1830L•W–1CHA1
Pricing: RD1830L•W
+ 1 Chateau Insert for 12"- 30"high
= Total for replacement door with insert installed

Example: *You need a Mullion insert for a wall 1836, hinged left.*

Order: RD1836L•W–1MD2
Pricing: RD1836L•W
+ 1 Mullion Insert for 36" - 42" high
= Total for mullion door with insert installed

Replacement doors and drawer fronts are coded for easy reference. The prefix codes indicate door or drawer and usage. The first two digits indicate nominal width and the second two digits indicate nominal height.

RD 18 30

Prefix code — **Nominal Width** — **Nominal Height**

Prefix codes are as follows:

RD	replacement door
RDA	replacement door angle
RDAAG	replacement door angle appliance garage
RDADP	replacement door angle double panel
RDAG	replacement door appliance garage
RDB	replacement door butt
RDBDP	replacement door butt double panel
RDBI	replacement door base inside angle
RDBO	replacement door base outside angle
RDDEZR*	replacement door desk easy reach (two doors hinged together)
RDDP	replacement door double panel
RDE	replacement door operational end
RDEZR*	replacement door easy reach (two doors hinged together)
RDLS	replacement door lazy susan (two doors mitered together)
RDM	replacement door multi-storage pantry (door storage unit attached)
RDMC	replacement door mirror cabinet
RDW	replacement drawer front
RDWA	replacement drawer front angle
RDWBCD	replacement drawer front base corner drawer
RDWEZR*	replacement door wall easy reach (two doors hinged)
RDWFD	replacement door wall furniture drawer
RDWI	replacement door wall inside angle
RDWLBF	replacement door wall lateral bifold cabinet
RDWO	replacement door wall outside angle
RDWTHG	replacement door wall top hinge
RDWWHV	replacement drawer front wall hung vanity
RDWZ*	replacement door wall easy reach (individual doors)
RDZ*	replacement door easy reach (individual doors)

PART	1/2" Overlay	Full Overlay
RDB3367•B	15 7/16 x 26 1/2	16 1/4 x 25 7/8
RDB2467•B	10 15/16 x 26 1/2	11 3/4 x 25 7/8
RD3667•B	16 15/16 x 26 1/2	17 3/4 x 25 7/8
RD3367•B	14 1/2 x 26 1/2	N/A
RD3067•B	13 15/16 x 26 1/2	14 3/4 x 25 7/8
RD2767•B	12 7/16 x 26 1/2	13 1/4 x 25 7/8
RD2467•B	22 x 26 1/2	23 5/8 x 25 7/8
RD2167•B	19 x 26 1/2	20 5/8 x 25 7/8
RD1867•B	16 x 26 1/2	17 5/8 x 25 7/8
RD1567•B	13 x 26 1/2	14 5/8 x 25 7/8
RD1267•B	10 x 26 1/2	11 5/8 x 25 7/8
RD0967•B	7 x 26 1/2	8 5/8 x 25 7/8
RDB3366•B	15 7/16 x 26	16 1/4 x 25 5/8
RDB2466•B	10 15/16 x 26	11 3/4 x 25 5/8
RD3666•B	16 15/16 x 26	17 3/4 x 25 5/8
RD3366•B	14 1/2 x 26	N/A
RD3066•B	13 15/16 x 26	14 3/4 x 25 5/8
RD2766•B	12 7/16 x 26	13 1/4 x 25 5/8
RD2466•B	22 x 26	23 5/8 x 25 5/8
RD2166•B	19 x 26	20 5/8 x 25 5/8
RD1866•B	16 x 26	17 5/8 x 25 5/8
RD1566•B	13 x 26	14 5/8 x 25 5/8
RD1266•B	10 x 26	11 5/8 x 25 5/8
RD0966•B	7 x 26	8 5/8 x 25 5/8
RDE2464•B or •W	21 x 22	22 5/8 x 23 5/8
RDE1264•B or •W	9 x 22	10 5/8 x 23 5/8
RDB3364•B or •W	15 7/16 x 22	16 1/4 x 23 5/8
RDB2464•B or •W	10 15/16 x 22	11 3/4 x 23 5/8
RD3664•B or •W	16 15/16 x 22	17 3/4 x 23 5/8
RD3064•B or •W	13 15/16 x 22	14 3/4 x 23 5/8
RD2764•B or •W	12 7/16 x 22	13 1/4 x 23 5/8
RD2464•B or •W	22 x 22	23 5/8 x 23 5/8
RD2164•B or •W	19 x 22	20 5/8 x 23 5/8
RD1864•B or •W	16 x 22	17 5/8 x 23 5/8
RD1564•B or •W	13 x 22	14 5/8 x 23 5/8
RD1264•B or •W	10 x 22	11 5/8 x 23 5/8
RDB3362•B	15 7/16 x 60 1/2	16 1/4 x 61 1/8
RDB2462•B	10 15/16 x 60 1/2	11 3/4 x 61 1/8
RD3662•B	16 15/16 x 60 1/2	17 3/4 x 61 1/8
RD3062•B	13 15/16 x 60 1/2	14 3/4 x 61 1/8
RD2762•B	12 7/16 x 60 1/2	13 1/4 x 61 1/8
RD2462•B	22 x 60 1/2	23 5/8 x 61 1/8
RD2162•B	19 x 60 1/2	20 5/8 x 61 1/8
RD1862•B	16 x 60 1/2	17 5/8 x 61 1/8
RD1562•B	13 x 60 1/2	14 5/8 x 61 1/8
RD1262•B	10 x 60 1/2	11 5/8 x 61 1/8
RDB2458•B or •W	10 29/32 x 56 1/2	11 3/4 x 58 1/8
RD2458•B or •W	22 x 56 1/2	23 5/8 x 58 1/8
RD1858•B or •W	16 x 56 1/2	17 5/8 x 58 1/8
RDM3656•B	16 29/32 x 55	17 3/4 x 55 5/8
RDM2456•B	22 x 55	23 5/8 x 55 5/8
RDM1856•B	N/A	17 5/8 x 55 5/8
RDE2456•B	21 x 55	22 5/8 x 55 5/8

PART	1/2" Overlay	Full Overlay
RDB3356•B	15 7/16 x 55	16 1/4 x 55 5/8
RDB2456•B or •W	10 29/32 x 55	11 3/4 x 55 5/8
RDA2456•B or •W	14 1/2 x 55	14 5/8 x 55 5/8
RD3656•B	16 29/32 x 55	17 3/4 x 55 5/8
RD3356•B	14 1/2 x 55	16 1/8 x 55 5/8
RD3056•B	13 29/32 x 55	14 3/4 x 55 5/8
RD2756•B	12 7/16 x 55	13 1/4 x 55 5/8
RD2456•B or •W	22 x 55	23 5/8 x 55 5/8
RD2156•B	19 x 55	20 5/8 x 55 5/8
RD1856•B or •W	16 x 55	17 5/8 x 55 5/8
RD1556•B	13 x 55	14 5/8 x 55 5/8
RD1256•B	10 x 55	11 5/8 x 55 5/8
RD0956•B	7 x 55	8 5/8 x 55 5/8
RDB3354•B or •W	N/A	16 1/4 x 53 5/8
RDB2454•B or •W	N/A	11 3/4 x 53 5/8
RDA2454•B or •W	N/A	14 5/8 x 53 5/8
RDA2154•B or •W	10 1/2 x 52	N/A
RD3654•B or •W	N/A	17 3/4 x 53 5/8
RD3354•B or •W	N/A	16 1/8 x 53 5/8
RD3054•B or •W	N/A	14 3/4 x 53 5/8
RD2754•B or •W	N/A	13 1/4 x 53 5/8
RD2454•B or •W	N/A	23 5/8 x 53 5/8
RD2154•B or •W	19 x 52	20 5/8 x 53 5/8
RD1854•B or •W	16 x 52	17 5/8 x 53 5/8
RD1554•B or •W	13 x 52	14 5/8 x 53 5/8
RD1254•B or •W	N/A	11 5/8 x 53 5/8
RD0954•B or •W	N/A	8 5/8 x 53 5/8
RD2152•B or •W	N/A	20 5/8 x 51 5/8
RDA2147•B or •W	10 5/8 x 47 5/8	N/A
RDB3347•B or •W	N/A	16 1/4 x 47 5/8
RDB2447•B or •W	N/A	11 3/4 x 47 5/8
RDA2447•B or •W	N/A	14 5/8 x 47 5/8
RD3647•B or •W	N/A	17 3/4 x 47 5/8
RD3347•B or •W	N/A	16 1/8 x 47 5/8
RD3047•B or •W	N/A	14 3/4 x 47 5/8
RD2747•B or •W	N/A	13 1/4 x 47 5/8
RD2447•B or •W	N/A	23 5/8 x 47 5/8
RD2147•B or •W	N/A	20 5/8 x 47 5/8
RD1847•B or •W	N/A	17 5/8 x 47 5/8
RD1547•B or •W	N/A	14 5/8 x 47 5/8
RD1247•B or •W	N/A	11 5/8 x 47 5/8
RD0947•B or •W	N/A	8 5/8 x 47 5/8
RDWOAC42	8 13/16 x 40	10 5/8 x 41 5/8
RDWIAC42	14 1/16 x 40	14 7/8 x 41 5/8
RDWEZR2442*	10 1/8 x 40	10 15/16 x 41 5/8
RDWEZR242142*	10 1/8 x 40	10 15/16 x 41 5/8
	7 1/8 x 40	7 15/16 x 41 5/8
RDWEZR2142*	7 1/8 x 40	7 15/16 x 41 5/8
RDWEZR212442*	7 1/8 x 40	7 15/16 x 41 5/8
	10 1/8 x 40	10 15/16 x 41 5/8
RDE1242•B or •W	9 x 40	10 5/8 x 41 5/8
RDB3342•B or •W	15 7/16 x 40	16 1/4 x 41 5/8
RDB2442•B or •W	10 29/32 x 40	11 3/4 x 41 5/8
RDA2442•B or •W	14 1/2 x 40	14 5/8 x 41 5/8

PART	1/2" Overlay	Full Overlay
RDA2142•B or •W	10 1/2 x 40	N/A
RD4542•B or •W	20 1/2 x 40	21 1/8 x 41 5/8
RD3942•B or •W	17 1/2 x 40	19 1/8 x 41 5/8
RD3642•B or •W	16 15/16 x 40	17 3/4 x 41 5/8
RD3342•B or •W	14 1/2 x 40	16 1/8 x 41 5/8
RD3042•B or •W	13 15/16 x 40	14 3/4 x 41 5/8
RD2742•B or •W	12 7/16 x 40	13 1/4 x 41 5/8
RD1842•B or •W	16 x 40	17 5/8 x 41 5/8
RD1542•B or •W	13 x 40	14 5/8 x 41 5/8
RD1242•B or •W	10 x 40	11 5/8 x 41 5/8
RD0942•B or •W	7 x 40	8 5/8 x 41 5/8
*Includes 2 doors hinged together — size listed is for one door		
RDWOAC39	8 13/16 x 37	10 5/8 x 38 5/8
RDWIAC39	14 1/16 x 37	14 7/8 x 38 5/8
RDWEZR2439*	10 1/8 x 37	10 15/16 x 38 5/8
RDWEZR242139*	10 1/8 x 37	10 15/16 x 38 5/8
	7 1/8 x 37	7 15/16 x 38 5/8
RDWEZR2139*	7 1/8 x 37	7 15/16 x 38 5/8
RDWEZR212439*	7 1/8 x 37	7 15/16 x 38 5/8
	10 1/8 x 37	10 15/16 x 38 5/8
RDE1239•B or •W	9 x 37	10 5/8 x 38 5/8
RDB3339•B or •W	15 7/16 x 37	16 1/4 x 38 5/8
RDB2439•B or •W	10 15/16 X 37	11 3/4 X 38 5/8
RDA2439•B or •W	14 1/2 x 37	14 5/8 x 38 5/8
RDA2139•B or •W	10 1/2 x 37	N/A
RD4539•B or •W	20 1/2 x 37	21 1/8 x 38 5/8
RD3939•B or •W	17 1/2 x 37	19 1/8 x 38 5/8
RD3639•B or •W	16 29/32 x 37	17 3/4 x 38 5/8
RD3339•B or •W	14 1/2 x 37	16 1/8 x 38 5/8
RD3039•B or •W	13 29/32 x 37	14 3/4 x 38 5/8
RD2739•B or •W	12 7/16 x 37	13 1/4 x 38 5/8
RD1839•B or •W	16 x 37	17 5/8 x 38 5/8
RD1539•B or •W	13 x 37	14 5/8 x 38 5/8
RD1239•B or •W	10 x 37	11 5/8 x 38 5/8
RD0939•B or •W	7 x 37	8 5/8 x 38 5/8
*Includes 2 doors hinged together — size listed is for one door		
RDWOAC36	8 13/16 x 34	10 5/8 x 35 5/8
RDWLBF3636	N/A	35 5/8 x 17 3/4
RDWLBF3036	N/A	29 5/8 x 17 3/4
RDWLBF2436	N/A	23 5/8 x 17 3/4
RDWIAC36	14 1/16 x 34	14 7/8 x 35 5/8
RDWHB3636	35 5/8 x 35 5/8	35 5/8 x 35 5/8
RDWHB3036	29 5/8 X 35 5/8	29 5/8 X 35 5/8
RDWHB1836	18 x 35 5/8	18 x 35 5/8
RDWHB1236	11 5/8 x 35 5/8	11 5/8 x 35 5/8
RDWEZR2436*	10 1/8 x 34	10 15/16 x 35 5/8
RDWEZR242136*	10 1/8 x 34	10 15/16 x 35 5/8
	7 1/8 x 34	7 15/16 x 35 5/8
RDWEZR2136*	7 1/8 x 34	7 15/16 x 35 5/8
RDE2436•B or •W	21 x 34	22 5/8 x 35 5/8
RDE1236•B or •W	9 x 34	10 5/8 x 35 5/8
RDB3336•B or •W	15 7/16 x 34	16 1/4 x 35 5/8
RDB2436•B or •W	10 29/32 x 34	11 3/4 x 35 5/8
RDA2436•B or •W	14 1/2 x 34	14 5/8 x 35 5/8
RDA2136•B or •W	10 1/2 x 34	N/A
RD4536•B or •W	20 1/2 x 34	22 1/8 x 35 5/8

PART	1/2" Overlay	Full Overlay
RD3936•B or •W	17 1/2 x 34	19 1/8 x 35 5/8
RD3636•B or •W	16 23/32 x 34	17 3/4 x 35 5/8
RD3336•B or •W	14 1/2 x 34	16 1/8 x 35 5/8
RD3036•B or •W	13 15/16 x 34	14 3/4 x 35 5/8
RD2736•B or •W	12 7/16 x 34	13 1/4 x 35 5/8
RD2436•B or •W	22 x 34	23 5/8 x 35 5/8
RD2136•B or •W	19 x 34	20 5/8 x 35 5/8
RD1836•B or •W	16 x 34	17 5/8 x 35 5/8
RD1536•B or •W	13 x 34	14 5/8 x 35 5/8
RD1236•B or •W	10 x 34	11 5/8 x 35 5/8
RD0936•B or •W	7 x 34	8 5/8 x 35 5/8
*Includes 2 doors hinged together — size listed is for one door		
RDE2433•B or •W	21 x 31	22 5/8 x 32 1/8
RDB3333•B or •W	15 7/16 x 31	16 1/4 x 32 1/8
RDB2433•B	10 15/16 x 31	11 3/4 x 32 1/8
RDA2433•B or •W	14 1/2 x 31	14 5/8 x 32 1/8
RD3633•B or •W	16 15/16 x 31	17 3/4 x 32 1/8
RD3333•B or •W	14 1/2 x 31	16 1/8 x 32 1/8
RD3033•B or •W	13 29/32 x 31	14 3/4 x 32 1/8
RD2733•B or •W	12 7/16 x 31	13 1/4 x 32 1/8
RD2433•B or •W	22 x 31	23 5/8 x 32 1/8
RD2133•B or •W	19 x 31	20 5/8 x 32 1/8
RD1833•B or •W	16 x 31	17 5/8 x 32 1/8
RD1533•B or •W	13 x 31	14 5/8 x 32 1/8
RD1233•B or •W	10 x 31	11 5/8 x 32 1/8
RD0933•B or •W	7 x 31	8 5/8 x 32 1/8
RDWOAC32	8 13/16 x 31	10 5/8 x 32 5/8
RDWIAC32	14 1/16 x 31	14 7/8 x 32 5/8
RDWEZR2432*	10 1/8 x 31	10 15/16 x 32 5/8
RDWEZR242132*	7 1/8 x 31	7 15/16 x 32 5/8
	10 1/8 x 31	10 15/16 x 32 5/8
RDWEZR2132*	7 1/8 x 31	7 15/16 x 32 5/8
RDWEZR212432*	10 1/8 x 31	10 15/16 x 32 5/8
	7 1/8 x 31	7 15/16 x 32 5/8
RDE1232•B or •W	9 x 31	10 5/8 x 32 5/8
RDB3332•B or •W	15 7/16 x 31	16 1/4 x 32 5/8
RDB2432•B	10 15/16 x 31	11 3/4 x 32 5/8
RDA2432•B or •W	14 1/2 x 31	14 5/8 x 32 1/8
RDA2132•B or •W	10 1/2 x 31	N/A
RD4532•B or •W	20 1/2 x 31	22 1/8 x 32 5/8
RD3932•B or •W	17 1/2 x 31	19 1/8 x 32 5/8
RD3632•B or •W	16 15/16 x 31	17 3/4 x 32 5/8
RD3332•B or •W	14 1/2 x 31	16 1/8 x 32 5/8
RD3032•B or •W	13 15/16 x 31	14 3/4 x 32 5/8
RD2732•B or •W	12 7/16 x 31	13 1/4 x 32 5/8
RD1832•B or •W	16 x 31	17 5/8 x 32 5/8
RD1532•B or •W	13 x 31	14 5/8 x 32 5/8
RD1232•B or •W	10 x 31	11 5/8 x 32 5/8
RD0932•B or •W	7 x 31	8 5/8 x 32 5/8
*Includes 2 doors hinged together — size listed is for one door		
RDZ3630•B or •W	10 1/8 x 28	10 15/16 x 29 5/8
RDZ3330•B or •W	7 1/8 x 28	7 15/16 x 29 5/8
RDWOAC30	8 13/16 x 28	10 5/8 x 29 5/8
RDWLBF3630	N/A	35 5/8 x 14 3/4
RDWLBF3030	N/A	29 5/8 x 14 3/4

PART	1/2" Overlay	Full Overlay
RDWLBF2430	N/A	23 5/8 x 14 3/4
RDWIAC30	14 1/16 x 28	14 7/8 x 29 5/8
RDWHB3630	35 5/8 x 29 5/8	35 5/8 x 29 5/8
RDWHB3030	29 5/8 X 29 5/8	29 5/8 X 29 5/8
RDWHB1830	18 x 29 5/8	18 x 29 5/8
RDWHB1230	11 5/8 x 29 5/8	11 5/8 x 29 5/8
RDWEZR2430*	10 1/8 x 28	10 15/16 x 29 5/8
RDWEZR242130*	7 1/8 x 28	7 15/16 x 29 5/8
	10 1/8 x 28	10 15/16 x 29 5/8
RDWEZR2130*	7 1/8 x 28	7 15/16 x 29 5/8
RDWEZR212430*	7 1/8 x 28	7 15/16 x 29 5/8
	10 1/8 x 28	10 15/16 x 29 5/8
RDMC2430•B	22 x 28	23 5/8 x 29 5/8
RDM3630•B or •W	16 29/32 x 28	17 3/4 x 29 5/8
RDE2430•B	21 x 28	22 5/8 x 29 5/8
RDE2430•B or •W	21 x 28	22 5/8 x 29 5/8
RDE1230•B or •W	9 x 28	10 5/8 x 29 5/8
RDBOAC30•B	13 13/16 x 28	15 5/8 x 29 5/8
RDBIAC30•B	9 1/16 x 28	9 7/8 x 29 5/8
RDB3730•W	17 7/16 x 28	18 1/4 x 29 5/8
RDB3430•W	15 15/16 x 28	16 3/4 x 29 5/8
RDB3330•B or •W	15 7/16 x 28	16 1/4 x 29 5/8
RDB2430•B or •W	10 29/32 x 28	11 3/4 x 29 5/8
RDA2430•B or •W	14 1/2 x 28	14 5/8 x 29 5/8
RDA2130•B or •W	10 1/2 x 28	N/A
RD4530•B or •W	20 1/2 x 28	22 1/8 x 29 5/8
RD4230•B or •W	19 29/32 x 28	20 3/4 x 29 5/8
RD3930•B or •W	17 1/2 x 28	19 1/8 x 29 5/8
RD3630•B or •W	16 29/32 x 28	17 3/4 x 29 5/8
RD3330•B or •W	14 1/2 x 28	16 1/8 x 29 5/8
RD3130•B or •W	14 11/16 x 28	15 1/2 x 29 5/8
RD3030•B or •W	13 29/32 x 28	14 3/4 x 29 5/8
RD2730•B or •W	12 7/16 x 28	13 1/4 x 29 5/8
RD2430•B or •W	22 x 28	23 5/8 x 29 5/8
RD2130•B or •W	19 x 28	20 5/8 x 29 5/8
RD1830•B or •W	16 x 28	17 5/8 x 29 5/8
RD1530•B or •W	13 x 28	14 5/8 x 29 5/8
RD1230•B or •W	10 x 28	11 5/8 x 29 5/8
RD0930•B or •W	7 x 28	8 5/8 x 29 5/8
RD0630•B	4 x 28	5 5/8 x 29 5/8
*Includes 2 doors hinged together — size listed is for one door		
RDM1827•B or •W	16 X 25	17 5/8 X 26 5/8
RDE2427•B or •W	21 x 25	22 5/8 x 26 5/8
RDB3727•W	17 7/16 x 25	18 1/4 x 26 5/8
RDB3427•W	15 15/16 x 25	16 3/4 x 26 5/8
RDB3327•B or •W	15 7/16 x 25	16 1/4 x 26 5/8
RDA2427•B or •W	13 x 25	14 5/8 x 26 5/8
RD3927•B or •W	17 1/2 x 25	19 1/8 x 26 5/8
RD3627•B or •W	16 29/32 x 25	17 3/4 x 26 5/8
RD3327•B or •W	14 1/2 x 25	16 1/8 x 26 5/8
RD3127•B or •W	14 11/16 x 25	15 1/2 x 26 5/8
RD3027•B or •W	13 29/32 x 25	14 3/4 x 26 5/8
RD2727•B or •W	12 7/16 x 25	13 1/4 x 26 5/8
RD2427•B or •W	22 x 25	23 5/8 x 26 5/8
RD2127•B or •W	19 x 25	20 5/8 x 26 5/8
RD1827•B or •W	16 X 25	17 5/8 x 26 5/8
RD1727•B***	17 x 27 1/2	17 x 27 1/2

PART	1/2" Overlay	Full Overlay
RD1227•B or •W	10 x 25	11 5/8 x 26 5/8
RD0927•B or •W	7 x 25	8 5/8 x 26 5/8
***Frame with mirror only		
RDZ3326•B	7 1/8 x 22 1/2	7 15/16 x 24 1/8
RD1826•B	16 x 22 1/2	17 5/8 x 24 1/8
RD1526•B	13 x 22 1/2	14 5/8 x 24 1/8
RD1226•B	10 x 22 1/2	11 5/8 x 24 1/8
RDWTHG3624	34 x 21 1/2	35 5/8 x 23 1/8
RDWTHG3024	28 x 21 1/2	29 5/8 x 23 1/8
RDWTHG2424	22 x 21 1/2	23 5/8 x 23 1/8
RDWTHG1524	13 x 21 1/2	14 5/8 x 23 1/8
RDWHB3624	35 5/8 x 23 1/8	35 5/8 x 23 1/8
RDWHB3024	29 5/8 X 17 5/8	29 5/8 X 17 5/8
RDWHB1824	18 X 23 1/8	18 X 23 1/8
RDWHB1224	11 5/8 X 23 1/8	11 5/8 X 23 1/8
RDLS3624•B	10 11/16 x 20 1/8	N/A
RDE2424•B or •W	21 x 21 1/2	22 5/8 x 23 1/8
RDB4224•B	19 15/16 x 21 1/2	20 3/4 x 23 1/8
RDB3924•B	18 7/16 x 21 1/2	19 1/4 x 23 1/8
RDB3724•W	17 7/16 x 21 1/2	18 1/4 x 23 1/8
RDB3424•W	15 15/16 x 21 1/2	16 3/4 x 23 1/8
RDB3324•B or •W	15 7/16 x 21 1/2	16 1/4 x 23 1/8
RDB2424•B or •W	10 29/32 x 21 1/2	11 3/4 x 23 1/8
RDA2424•B or •W	14 1/2 x 21 1/2	14 5/8 x 23 1/8
RDA2124•B or •W	10 1/2 x 21 1/2	N/A
RD4524•B or •W	20 1/2 x 21 1/2	22 1/8 x 23 1/8
RD3924•B or •W	17 1/2 x 21 1/2	19 1/8 x 23 1/8
RD3624•B or •W	16 29/32 x 21 1/2	17 3/4 x 23 1/8
RD3324•B or •W	14 1/2 x 21 1/2	16 1/8 x 23 1/8
RD3124•B	14 11/16 x 21 1/2	15 1/2 x 23 1/8
RD3124•B or •W	14 11/16 x 21 1/2	15 1/2 x 23 1/8
RD3024•B or •W	13 29/32 x 21 1/2	14 3/4 x 23 1/8
RD2724•B or •W	12 7/16 x 21 1/2	13 1/4 x 23 1/8
RD2424•B or •W	22 x 21 1/2	23 5/8 x 23 1/8
RD2124•B or •W	19 x 21 1/2	20 5/8 x 23 1/8
RD1824•B or •W	16 x 21 1/2	17 5/8 x 23 1/8
RD1524•B or •W	13 x 21 1/2	14 5/8 x 23 1/8
RD1224•B or •W	10 x 21 1/2	11 5/8 x 23 1/8
RD0924•B or •W	7 x 21 1/2	8 5/8 x 23 1/8
RDWTHG3622	35 x 19	36 5/8 x 20 5/8
RDWTHG3022	28 x 19	29 5/8 x 20 5/8
RDB4222•B	19 15/16 x 19	20 3/4 x 20 5/8
RDB3922•B	18 7/16 x 19	19 1/4 x 20 5/8
RDB3722•W	17 7/16 x 19	18 1/4 x 20 5/8
RDB3422•W	15 15/16 x 19	16 3/4 x 20 5/8
RDB2422•B or •W	10 15/16 x 19	11 3/4 x 20 5/8
RD3922•B or •W	17 1/2 x 19	19 1/8 x 20 5/8
RD3622•B or •W	16 29/32 x 19	17 3/4 x 20 5/8
RD3322•B or •W	14 1/2 x 19	16 1/8 x 20 5/8
RD3122•B or •W	14 11/16 x 19	15 1/2 x 20 5/8
RD3022•B or •W	13 29/32 x 19	14 3/4 x 20 5/8
RD2722•B or •W	12 7/16 x 19	13 1/4 x 20 5/8
RD2122•B or •W	19 x 19	20 5/8 x 20 5/8
RD1822•B or •W	16 x 19	17 5/8 x 20 5/8
RD1522•B or •W	13 x 19	14 5/8 x 20 5/8

PART	1/2" Overlay	Full Overlay
RD1222•B or •W	10 x 19	11 5/8 x 20 5/8
RDB3321•B	15 7/16 x 18 1/2	16 1/4 x 20 1/8
RDB2421•B	10 15/16 x 18 1/2	11 3/4 x 20 1/8
RD3921•B	17 1/2 x 18 1/2	19 1/8 x 20 1/8
RD3621•B	16 15/16 x 18 1/2	17 3/4 x 20 1/8
RD3021•B	13 15/16 X 18 1/2	14 3/4 x 20 1/8
RD2721•B	12 7/16 x 18 1/2	13 1/4 x 20 1/8
RD2421•B	22 x 18 1/2	23 5/8 x 20 1/8
RD2121•B	19 x 18 1/2	20 5/8 x 20 1/8
RD1821•B	16 x 18 1/2	17 5/8 x 20 1/8
RD1521•B	13 x 18 1/2	14 5/8 x 20 1/8
RD1221•B or •W	10 x 18 1/2	11 5/8 x 20 1/8
RDWTHG3618	34 x 16	35 5/8 x 17 5/8
RDWTHG3018	28 x 16	29 5/8 x 17 5/8
RDWTHG2418	22 x 16	23 5/8 x 17 5/8
RDWTHG1518	13 x 16	14 5/8 x 17 5/8
RDWHB3618	35 5/8 X 17 5/8	35 5/8 X 17 5/8
RDWHB3018	29 5/8 X 17 5/8	29 5/8 X 17 5/8
RDWHB1818	18 X 17 5/8	18 X 17 5/8
RDWHB1218	11 5/8 X 17 5/8	11 5/8 X 17 5/8
RDB4818•B	22 15/16 x 16	23 3/4 x 17 5/8
RDB4518•B	21 7/16 x 16	22 1/4 x 17 5/8
RDB4218•B	19 15/16 x 16	20 3/4 x 17 5/8
RDB3918•B	18 7/16 x 16	19 1/4 x 17 5/8
RDB3718•B	17 7/16 x 16	18 1/4 x 17 5/8
RDB3418•W	15 15/16 X 16	16 3/4 X 17 5/8
RDB3318•B or •W	15 7/16 x 16	16 1/4 x 17 5/8
RDB2418•B or •W	10 29/32 x 16	11 3/4 x 17 5/8
RDAG3618•B	34 x 18	35 5/8 x 17 5/8
RDAG3018•B	28 x 18	29 5/8 x 17 5/8
RDAG2418•B	22 x 18	23 5/8 x 17 5/8
RDAG1818•B	16 x 18	17 5/8 x 17 5/8
RDAAG2418•B	14 1/2 x 18	14 5/8 x 17 5/8
RDA2418•B or •W	14 1/2 x 16	14 5/8 x 17 5/8
RDA2118•B or •W	10 1/2 x 16	N/A
RD4318•W	19 1/2 x 16	21 1/8 x 17 5/8
RD3918•B or •W	17 1/2 x 16	19 1/8 x 17 5/8
RD3618•B or •W	16 29/32 x 16	17 3/4 x 17 5/8
RD3318•B or •W	14 1/2 x 16	16 1/8 x 17 5/8
RD3118•B or •W	14 11/16 x 16	15 1/2 x 17 5/8
RD3018•B or •W	13 29/32 x 16	14 3/4 x 17 5/8
RD2718•B or •W	12 7/16 x 16	13 1/4 x 17 5/8
RD2418•B or •W	22 x 16	23 5/8 x 17 5/8
RD2118•B or •W	19 x 16	20 5/8 x 17 5/8
RD1818•B or •W	16 x 16	17 5/8 x 17 5/8
RD1518•B or •W	13 x 16	14 5/8 x 17 5/8
RD1218•B or •W	10 x 16	11 5/8 x 17 5/8
RD0918•B or •W	7 x 16	8 5/8 x 17 5/8
RDWBCD3616	13 x 11 5/8	14 5/8 x 11 5/8
RD1516•B	13 x 15 1/2	14 5/8 x 16 5/8
RDWTHG3615	34 x 13	35 5/8 x 14 5/8
RDWTHG3015	28 x 13	29 5/8 x 14 5/8
RDWTHG2415	22 x13	23 5/8 x 14 5/8
RDWTHG1515	13 x 13	14 5/8 x 14 5/8
RDWBCD3615	10 3/8 x 11 5/8	11 3/8 x 11 5/8

PART	1/2" Overlay	Full Overlay
RDB3715•W	17 7/16 x 13	18 1/4 x14 5/8
RDB3415•W	15 15/16 x 13	16 3/4 x 14 5/8
RDB3315•B or •W	15 7/16 x 13	16 1/4 x 14 5/8
RDB2415•B or •W	10 29/32 x 13	11 3/4 x 14 5/8
RDA2415•B or •W	14 1/2 x 13	14 5/8 x 14 5/8
RDA2115•B or •W	10 1/2 x 13	N/A
RD4315•W	19 1/2 x 13	21 1/8 x 14 5/8
RD3915•B or •W	17 1/2 x 13	19 1/8 x 14 5/8
RD3615•B or •W	16 29/32 x 13	17 3/4 x 14 5/8
RD3315•B or •W	14 1/2 x 13	16 1/8 x 14 5/8
RD3115•B or •W	14 11/16 x 13	15 1/2 x 14 5/8
RD3015•B or •W	13 29/32 x 13	14 3/4 x 14 5/8
RD2715•B or •W	12 7/16 x 13	13 1/4 x 14 5/8
RD2115•B or •W	19 x 13	20 5/8 x 14 5/8
RD1815•B or •W	16 x 13	17 5/8 x 14 5/8
RD1515•B or •W	13 x 13	14 5/8 x 14 5/8
RD1215•B or •W	10 x 13	11 5/8 x 14 5/8
RDWBCD3614	10 3/8 x 11 5/8	11 3/8 x 11 5/8
RDWTHG3612	34 x 10	35 5/8 x 11 5/8
RDWTHG3012	28 x 10	29 5/8 x 11 5/8
RDWTHG2412	22 x 10	23 5/8 x 11 5/8
RDWTHG1512	13 x 10	14 5/8 x 11 5/8
RDB3712•W	17 7/16 x 10	18 1/4 x 11 5/8
RDB3412•B or •W	15 15/16 x 10	16 3/4 x 11 5/8
RDB3312•B or •W	15 7/16 x 10	16 1/4 x 11 5/8
RDB2412•B or •W	10 29/32 x 10	11 3/4 x 11 5/8
RDA2412•B or •W	14 1/2 x 10	14 5/8 x 11 5/8
RDA2112•B or •W	10 1/2 x 10	N/A
RD4312•B or •W	19 1/2 x 10	21 1/8 x 11 5/8
RD3912•B or •W	17 1/2 x 10	19 1/8 x 11 5/8
RD3612•B or •W	16 29/32 x 10	17 3/4 x 11 5/8
RD3312•B or •W	14 1/2 x 10	16 1/8 x 11 5/8
RD3112•B or •W	14 11/16 x 10	15 1/2 x 11 5/8
RD3012•B or •W	13 29/32 x 10	14 3/4 x 11 5/8
RD2712•B or •W	12 7/16 x 10	13 1/4 x 11 5/8
RD2112•B or •W	19 x 10	20 5/8 x 11 5/8
RD1812•B or •W	16 x 10	17 5/8 x 11 5/8
RD1512•B or •W	13 x 10	14 5/8 x 11 5/8
RD1212•B or •W	10 x 10	11 5/8 x 11 5/8
RD0912•B or •W	N/A	8 5/8 X 11 5/8
RDWWHV3609	9 x 34	9 7/8 x 35 5/8
RDWWHV3009	9 x 28	9 7/8 x 29 5/8
RDWWHV1209	9 x 10	9 7/8 x 11 5/8
RDWBCD3606	5 3/4 x 11 5/8	6 1/8 x 11 5/8
RDWFD2705	N/A	5 5/8 x 26 5/8
RDWFD2405	N/A	5 5/8 x 23 5/8
RDWFD2105	N/A	5 5/8 x 20 5/8
RDWFD1805	N/A	5 5/8 x 17 5/8
RDWFD1505	N/A	5 5/8 x 14 5/8
RDEZR3633•B*	10 1/8 x 28	10 15/16 x 29 5/8
	7 1/8 x 28	7 15/16 x 29 5/8
RDEZR36•B*	10 1/8 x 28	10 15/16 x 29 5/8

PART	1/2" Overlay	Full Overlay
RDEZR3336•B*	7 1/8 x 28	7 15/16 x 29 5/8
	10 1/8 x 28	10 15/16 x 29 5/8
RDEZR33•B*	7 1/8 x 28	7 15/16 x 29 5/8
RDDEZR27•B*	7 1/8 x 22 1/2	7 15/16 x 24 1/8
*Includes 2 doors hinged together — size listed is for one door		
RDW4216	13 x 40	14 5/8 x 41 5/8
RDW3616	13 x 34	14 5/8 x 35 5/8
RDW3316	N/A	14 5/8 x 32 5/8
RDW3016	13 x 28	14 5/8 x 29 5/8
RDW2716	13 x 25	14 5/8 x 26 5/8
RDW2416	13 x 22	14 5/8 x 23 5/8
RDW2116	13 x 19	14 5/8 x 20 5/8
RDW1816	13 x 16	14 5/8 x 17 5/8
RDW1516	13 x 13	14 5/8 x 14 5/8
RDW1216	13 x 10	11 5/8 x 14 5/8
RDW4215	N/A	11 3/8 x 41 5/8
RDW3915	N/A	11 3/8 x 38 5/8
RDW3615	N/A	11 3/8 x 35 5/8
RDW3315	N/A	11 3/8 x 32 5/8
RDW3115	N/A	11 3/8 x 31 1/8
RDW3015	N/A	11 3/8 x 29 5/8
RDW2715	N/A	11 3/8 x 26 5/8
RDW2415	N/A	11 3/8 x 23 5/8
RDW2115	N/A	11 3/8 x 20 5/8
RDW1815	N/A	11 3/8 x 17 5/8
RDW1515	N/A	11 3/8 x 14 5/8
RDW1215	N/A	11 3/8 x 11 5/8
RDW4214	10 3/8 x 37	N/A
RDW3914	10 3/8 x 37	N/A
RDW3614	10 3/8 x 34	N/A
RDW3314	10 3/8 x 31	N/A
RDW3114	10 3/8 x 29 1/2	N/A
RDW3014	10 3/8 x 28	N/A
RDW2714	10 3/8 x 25	N/A
RDW2414	10 3/8 x 22	N/A
RDW2114	10 3/8 x 19	N/A
RDW1814	10 3/8 x 16	N/A
RDW1514	10 3/8 x 13	N/A
RDW1214	10 3/8 x 10	N/A
RDW2413	N/A	11 1/8 x 23 5/8
RDW2113	N/A	11 1/8 x 20 5/8
RDW1813	9 1/8 x 16	11 1/8 x 17 5/8
RDW1513	9 1/8 x 13	11 1/8 x 14 5/8
RDW1213	9 1/8 x 10	11 1/8 x 11 5/8
RDW3012	11 3/16 x 28	12 x 29 5/8
RDW2412	11 3/16 x 22	12 x 23 5/8
RDW1812	11 3/16 x 16	12 x 17 5/8
RDW3611	8 3/4 x 34	10 5/8 x 35 5/8
RDW3311	8 3/4 x 31	10 5/8 x 32 5/8
RDW3111	8 3/4 x 29 1/2	10 5/8 x 31 1/8
RDW3011	8 3/4 x 28	10 5/8 x 29 5/8
RDW2711	8 3/4 x 25	10 5/8 x 26 5/8

PART	1/2" Overlay	Full Overlay
RDW2411	8 3/4 x 22	10 5/8 x 23 5/8
RDW2111	8 3/4 x 19	10 5/8 x 20 5/8
RDW1811	8 3/4 x 16	10 5/8 x 17 5/8
RDW1511	8 3/4 x 13	10 5/8 x 14 5/8
RDW1211	8 3/4 x 10	10 5/8 x 11 5/8
RDW3010	N/A	9 1/8 x 29 5/8
RDW2710	8 1/2 x 25	9 1/8 x 26 5/8
RDW2410	N/A	9 1/8 x 23 5/8
RDW2110	N/A	9 1/8 x 20 5/8
RDW1810	N/A	9 1/8 x 17 5/8
RDW1510	N/A	9 1/8 x 14 5/8
RDW1210	N/A	9 1/8 x 11 5/8
RDW3609	7 x 34	8 5/8 x 35 5/8
RDW2409	9 1/2 x 22	N/A
RDW2109	9 1/2 x 19	N/A
RDW1809	9 1/2 x 16	N/A
RDW1509	9 1/2 x 13	N/A
RDW1209	9 1/2 x 10	N/A
RDW3308	N/A	7 5/8 X 32 5/8
RDW3108	N/A	7 5/8 x 31 1/8
RDW3008	N/A	7 5/8 X 29 5/8
RDW2708	N/A	7 5/8 X 26 5/8
RDW2408	N/A	7 5/8 x 23 5/8
RDW2108	N/A	7 5/8 x 20 5/8
RDW1808	N/A	7 5/8 x 17 5/8
RDW1508	N/A	7 5/8 x 14 5/8
RDW3007	7 1/2 x 28	N/A
RDW2707	7 1/2 x 25	N/A
RDW4506*****	5 3/4 x 20 1/2	6 1/8 x 22 1/8
RDW4206	5 3/4 x 40	6 1/8 x 41 5/8
RDW4006	5 3/4 x 37	6 1/8 x 38 5/8
RDW3906	5 3/4 x 17 1/2	6 1/8 x 19 1/8
RDW3606	5 3/4 x 34	6 1/8 x 35 5/8
RDW3306	5 3/4 x 31	6 1/8 x 32 5/8
RDW3106	5 3/4 X 29 1/2	N/A
RDW3006	5 3/4 x 28	6 1/8 x 29 5/8
RDW2706	5 3/4 x 25	6 1/8 x 26 5/8
RDW2406	5 3/4 x 22	6 1/8 x 23 5/8
RDW2106	5 3/4 x 19	6 1/8 x 20 5/8
RDW1806	5 3/4 x 16	6 1/8 x 17 5/8
RDW1706	5 3/4 x 14 1/2	6 1/8 x 16 1/8
RDW1506	5 3/4 x 13	6 1/8 x 14 5/8
RDW1206	5 3/4 x 10	6 1/8 x 11 5/8
RDW0906	5 3/4 x 7	6 1/8 x 8 5/8
RDW0606*****	5 1/2 x 5 13/16	5 1/2 x 5 13/16
*****For spice drawer cabinet only		
RDW3604	3 1/2 x 34	N/A
RDW3304	3 1/2 x 31	4 1/8 x 32 5/8
RDW3004	3 1/2 x 28	4 1/8 x 29 5/8
RDW2704	3 1/2 x 25	4 1/8 x 26 5/8
RDW2604	3 1/2 x 25	4 1/8 x 26 5/8
RDW2404	3 1/2 x 22	4 1/8 x 23 5/8
RDW2104	3 1/2 x 19	4 1/8 x 20 5/8
RDW1804	3 1/2 x 16	4 1/8 x 17 5/8

PART	1/2" Overlay	Full Overlay
RDW1704	3 1/2 x 14 1/2	N/A
RDW1504	3 1/2 x 13	4 1/8 x 14 5/8

CODE	PAGE
1	
161	M36
171	M36
181	M36
191	M36
1AM	L19
1ATQ	L16
1BIS	L11
1CAS	L26
1CDXROT	G5
1CG	L20
1CHA	L8
1CKB	L25
1CLI	L8
1COL	L25
1CRO	L14
1DOL	L26
1DRS.PREP	L12
1DXROT	K17
1EV	L20
1FRBIS	L4
1FRDOL	L4
1FRMIR	L5
1FRSAT	L5
1FRSLK	L5
1HE	L21
1LIS	L14
1MD	L23
1MIR	L17
1MOI	L27
1MRF	L14
1MRT	L27
1ONL	L25
1PA	L21
1PAL	L9
1PEN	L9
1PRA	L15
1PRI	L13
1RA	L22
1RAV	L27
1SAT	L15
1SD	L22
1SDXROT	K18
1SHW	L13
1SLK	L17
1STY	L28
1TD	D51, F26, E48
1UDXROT	G2
1VADD	G58
1VAU	L28
1VEBIS	L6
1VEDOL	L6
1VEMIR	L6
1VESAT	L7
1VESLK	L7
1VIC	L9
1VS	L24
1VSWTDS	G58
1VWTDS	G58
1WTD	L18
1YKS	L10
2	
205	M36
2AM	L19
2ATQ	L16
2BIS	L11
2CAS	L26
2CG	L20
2CHA	L8
2CKB	L25
2CLI	L8
2COL	L25
2CRO	L14
2DOL	L26
2DRS.PREP	L12
2DXROT	K17
2EV	L20
2FRBIS	L4
2FRDOL	L4
2FRMIR	L5
2FRSAT	L5
2FRSLK	L5
2HE	L21
2LIS	L14
2MD	L23
2MIR	L17
2MOI	L27
2MRF	L14
2MRT	L27
2ONL	L25
2PA	L21
2PAL	L9
2PEN	L9
2PRA	L15
2PRI	L13
2RA	L22
2RAV	L27
2SAT	L15
2SD	L22
2SDXROT	K18
2SHW	L13
2SLK	L17
2STY	L28
2VADD	G58
2VAU	L28
2VEBIS	L6
2VEDOL	L6
2VEMIR	L6
2VESAT	L7
2VESLK	L7
2VIC	L9
2VS	L24
2VSWTDS	G58
2VWTDS	G58
2WTD	L18
2YKS	L10
3	
3003	M36
3004	M37
3013	M37
3015	M36
3018	M37
3019	M37
3020	M37
3021	M37
3023	M38
3024	M38
3035	M38
3036	M38
3037	M38
3038	M38
3042	M38
3043	M38
3AM	L19
3ATQ	L16
3BIS	L11
3CAS	L26
3CG	L20
3CHA	L8
3CKB	L25
3CLI	L8
3COL	L25
3CRO	L14
3DOL	L26
3DRS.PREP	L12
3DXROT	K17
3EV	L20
3FRBIS	L4
3FRDOL	L4
3FRMIR	L5
3FRSAT	L5
3FRSLK	L5
3HE	L21
3LIS	L14
3MD	L23
3MIR	L17
3MOI	L27
3MRF	L14
3MRT	L27
3ONL	L25
3PA	L21
3PAL	L9
3PEN	L9
3PRA	L15
3PRI	L13
3RA	L22
3RAV	L27
3SAT	L15
3SD	L22
3SDXROT	K18
3SHW	L13
3SLK	L17
3STY	L28
3VAU	L28
3VEBIS	L6
3VEDOL	L6
3VEMIR	L6
3VESAT	L7
3VESLK	L7
3VIC	L9
3VS	L24
3WTD	L18
3YKS	L10
4	
4AM	L19
4ATQ	L16
4BIS	L11
4CAS	L26
4CG	L20
4CHA	L8
4CKB	L25
4CLI	L8
4COL	L25
4CRO	L14
4DOL	L26
4DRS.PREP	L12
4DXROT	K17
4EV	L20
4FRBIS	L4
4FRDOL	L4
4FRMIR	L5
4FRSAT	L5
4FRSLK	L5
4HE	L21
4LIS	L14
4MD	L23
4MIR	L17
4MOI	L27
4MRF	L14
4MRT	L27
4ONL	L25
4PA	L21
4PAL	L9
4PEN	L9
4PRA	L15
4PRI	L13
4RA	L22
4RAV	L27
4SAT	L15
4SD	L22
4SDXROT	K18
4SHW	L13
4SLK	L17
4STY	L28
4VADD	G58
4VAU	L28
4VEBIS	L6
4VEDOL	L6
4VEMIR	L6
4VESAT	L7
4VESLK	L7
4VIC	L9
4VS	L24
4VSWTDS	G58
4VWTDS	G58
4WTD	L18
4YKS	L10
5	
506	M36
5DXROT	K17
5SDXROT	K18
6	
634	M36
6DXROT	K17
6SDXROT	K18
7	
7017	M38
7023	M39
7025	M39
7026	M39
7033	M39
7034	M40
7035	M40
7040	M40
7053	M40
7054	M40
7065	M41
7066	M41
7067	M41
7068	M41
7070	M42
7071	M42
7077	M42
7080	M42
7081	M43
7085	M43
7086	M43
7087	M43
7088	M43
7104	M39
7105	M39
7106	M39
7107	M41
7108	M41
7109	M41
7110	M42

CODE	PAGE
7111	M42
7112	M42
7113	M43
7114	M43
7115	M44
7116	M44
7117	M44
7118	M44
7119	M44
7120	M45
7121	M45
7122	M45
7123	M45
7124	M45
7125	M45
7126	M45
7127	M46
7128	M46
7129	M46
7130	M46
7131	M46
7132	M46
7133	M46
7134	M46
7135	M46
7136	M46
7137	M47
7138	M47
7139	M47
7140	M47
7141	M47
7146	M47
7147	M48
7148	M48
7151	M48
7152	M48
7153	M48
7154	M48
7156	M48
7159	M49
7160	M49
7161	M49
7162	M49
7165	M49
7166	M50
7167	M50
7168	M50
7169	M50
7170	M50
7171	M50
7172	M50
7173	M50
7174	M51
7175	M51
7176	M51
7177	M51
7183	M51
7184	M51
7185	M51
7186	M51
7187	M51
7188	M51
7189	M51

A

AB	J2
ABBC	J4
ABD	J2-3
ABDT	J6
ABDW	J4
ABEC	J5
ABEP	J8
ABF	J8
ABFH	J2
ABMW	J4
ABPP	J2
ABSR	J4
ABWB	J6
AC	M28, N9
ACM	M10
ADBE	C22
ADD	E48, I10
ADDIV	E48, I10
ADE	C22
ADTE	C22
ADWE	C22
AGSK	K15
AGSKPWA	K15
AGSKWA	K15
AGSKWZ	K15
AICM	M18
ALS	J5
ALSEP	J9
AOC	J7
AOSC	M18
APBBC	J5
APC	C14
APDRL	K6
APDRNH	K6
APDRR	K6
APDW	K7
APFC	C14
APL	M32
APSBE	E12
APWAS	K15
APWEZRS	K15
APWS	K15
APWSK	K6
ARL	M30
ASB	J3
ASBEOS	J5
ASF	J3
ASI	M26
ASL	M30
ASPBEOS	J6
ASPO	M28
ASRB	J4
ATF	J8
AU	J6
AVGSK	K15
AVGSKWA	K15
AVGSKWZ	K15
AWAS	K15
AWE	M20
AWEZRS	K15
AWMTK	J9
AWS	K15
AWSK	J8
AWT	I6

B

B	E1-3, E42, E40
BA	E24
BB	E50, E61
BBC	E21-22
BBD	E7
BBK	E50
BBMC	E18
BC	E62
BCA	E31
BCAS	K15
BCC	E42
BCD	E27
BCS	E39
BCSRK	E46
BCSS	E27
BD	E6
BDDC	E8
BDW	E19
BEA	E31
BEAS	K15
BEB	C18
BEC	E31
BECS	K15
BEMM	M17
BEP	E63
BEPL	K10
BEZRS	K15
BF	E59
BFC	E62
BFF	E60
BFOL	E59
BFP	E38
BIAC	E28
BIACS	K15
BLB	E40
BLR	M15
BLTK	E65
BLTK	F33, G67, H13, I12
BM	M16
BMC	E17
BMCDE	E18
BMCE	E17-18
BMDC	E18
BMHK	F4
BMS	E42
BMSP	E41
BOAC	E28
BOACS	K15
BOCU	E15
BODWC	E37
BOE	C21
BOX	N3-5
BPM	M16
BPP	E38
BPPS	E7
BPPUS	E40
BS	K15
BSDC	E41
BSIBSS	K15
BSS	E41
BTP	E38
BUP	E40
BWBB	E44
BWBT	E43
BWR	E37
BWTDXROTK	N1

C

CAPDR	K2
CAPDW	K4
CAPFO	K3
CBDMK	E52
CBE	M26
CBEB	C19
CBF	N8
CC	E51
CCB	I7
CCK	N8, E51
CCL	I7
CCM	M11
CCR	I7
CD	E53
CDAK	E53
CDK	E53
CDXROT	G5
CFO	C28
CGD	E55
CGPB	K12
CH	C24
CHB	E52
CHBK	E52
CIECL	M33
CL	M31
CLDF	C36
CM	M10
CMCK	E19
CMT	G7
COMM	M17
CP	M33-34
CPE	M17
CPLB	C18-20
CR	M23
CRHCP	D40
CRHF	D28
CTM	M23
CTS	M4
CUTOUT	K3
CVBBE	M22
CVC	M29
CVL	M32
CVLR	M15
CVMM	M17
CW	C23
CW.CH	C26
CW.ID	C24
CW.ID.CH	C27
CW.RD	C24
CW.RD.CH	C27
CWC	M13
CWE	M20
CWT	I6

D

DB	H10
DBE	C20
DC	H10
DCL	M31
DCDK	E59
DCSK	E57
DDB	E16
DDFD	H3
DDO	H2
DDR	H2
DE	M17
DEP	E64, G34, G40, G46, G52
DEZR	H6
DF	G34, G40, G46, G52 H8
DFC	H10
DFD	H3
DFF	H8
DFOL	H8
DIP	E17
DKD	H5
DL	M31
DL	M31
DM	M21
DMSD	H3
DOK	F25
DOS	D43
DOSA	D44
DP	E49

CODE	PAGE
DRB	E16
DREP	F31
DRPD	C35
DS	D44
DSA	D44
DSB	E11-12
DSBE	E12
DSTK	N3
DTCSK	E57
DTE	C20
DVE	C20
DVTEP	F30
DWBT	H4
DWBT	H4
DWE	C20
DWP	E19
DWTEP	F30
DXROT	E47, K17
E	
EDB	N7
EGE	M27
EPC	M29
EPCM	M11
EPL	M31
EPLG	M31
EPLR	M15
EPSTR	M14
EZR	E25-26
EZRS	K15
F	
FB	I5
FBG	C32
FBS	I3-4
FCCP	F24
FCE	F23
FCEC	F24
FCEP	F24
FCES	K14
FD	I9
FDL	M31
FE	D56, E61, H9
FEB	I7
FEL	I7
FER	I7
FFB	D10, D56
FFE	E61, H10
FH	C35
FL	M32
FLS	I8-I9
FLSC	I8
FLSCM	M13
FLSSM	M13
FM	G26-27, G33, G39, G45 G51
FMBEP	E64
FMDEP	H12
FMTEP	F32, G66
FMVEP	G65
FMWEP	D59
FP	M33-34
FPEB	C14
FPMBEP	E64
FPMWEP	D59
FPR	C36
FRL	M33
FS	N14
FSCI	E56
FSCIK	E56
FSP	M34
FW	I1
FWT	I2
G	
GD	C35
GSK	K14
GSKPWA	K14
GSKWA	K14
GSKWZ	K14
H	
HK	G60
HSD	E15
I	
IBSS	C34
ICAF	E59, D54, G61
ICAFOL	D54, E60, G61
ICM	M18
ID	C23
ID.CH	C26
IEB	E35
IECDO	E33
IECDW	E34
IECFDO	E35
IEG	E36
IET	E36
IETL	E36
IF	C28
ILR	M15
IMCB	C33
IMCU	C33
IMCW	C33
IUCS	C34
IVI	M27
IWS	C33
K	
KBD	H5
KBDK	H8
KCDOK	E49
KCSK	D51
KDD	H7
KDDK	H7
KMP	N8
KS	E51
KSCC	E52
KSCCK	E52
KSK	E51
L	
LBLR	*M15*
LCM	*M10*
LCVCS	*M24*
LCVLR	*M15*
LCVM	*M12*
LDI	*M26*
LED	*M1-3*
LEPCM	*M11*
LFDM	*M13*
LM	*M24*
LOSC	*M18*
LRM	*M18*
LS	*E23*
LSA	*E24*
LSAS	*K15*
LSEP	*E23*
LSK	*D51, E47*
LSKC	*D51*
LSTCM	*M11*
LSTR	*M14*
LTV	*G26*
LUM	*M25*
LW	*D22*
M	
M.MBEP	E65
M.MDEP	H12
M.MTEP	F32, G67
M.MVEP	G66
MAS	M4
MBEP	E64
MBM	M16
MC	G24
MCB	E32
MCC	F20
MCCD	F21
MCCDE	F22
MCCE	F21
MCS	K16, M24
MCTS	M4
MCU	F9
MCW	D19
MDEP	H12
MDRS	N5
MFWE	M20
MIAPFC	C15
MIFP	C15
MIP	C15
MIV	C14
MLR	M15
MLSTR	M14
MOSC	M18
MS	M12
MSB	C28
MSBE	M19
MSBM	M22
MSBP	M22
MSBWE	M20
MSM	M19
MSOTB	C29
MSP	F10
MSPB	C29
MSPBS	K15
MSPDSS	K15
MSPSWS	K15
MSSB	M4
MSTR	M14
MSUB	C29
MSUT	C29
MSW	C28
MTEP	F31-32, G66
MTK	E65, F33, G67, H13, I12
MVEP	G65
MWCS	K14
MWEP	D58-59
N	
NBM	M16
NSDLK	E49, G59
NSDLDXTK	E49
NSDLR	E49, G59
O	
O	D48, H1
OC	F14-20
OGE	M17
OGM	M21
OGP	M21
OLC	M29
OLM	M27
OLPO	M28
OPWBC	D59, E65
OSC	M18
OTK	F25
OVR	M28
OW	H1
P	
PAWT	I6
PB	E4-6
PBA	E30
PBAS	K15
PBBC	E22-23
PBDRET	N3
PBS	K15
PBWTBPPDR	N2
PBWTDC	N2
PBWTDR	N1
PBWTDXR	N2
PBWTVBPDR	N2
PCBFC	E63
PCBFF	E60
PCDFC	H11
PCDFF	H9
PCRH	D28
PCSTBC	E62
PCSTVC	G64
PCTFC	F29
PCTFF	F27
PCVFC	G64
PCVFF	G62
PCWFC	D57
PCWFF	D55
PCWT	I6
PDO	E55
PDOPK	E55
PDRTKD	N2
PE	C13
PEZR	E29
PEZRS	K15
PFDR	N3
PFM	G27-28
PH12C	N6
PH12K	N6
PH12PO	N6
PH1516FO	N5
PH170EZ	N6
PH34FO	N5
PHBF	N7
PHFM	N6
PIECL	M33
PMBEP	E64
POTK	E50
PRH	D29
PRHCP	D40
PS	F10
PSD	E42
PSP	M34
PTH	D50
PTWT	I6
PUCP	D53
PW	D6-7
PWA	D16-17
PWAS	K14
PWBC	D10
PWD	C37
PWEZR	D17
PWEZRS	K14
PWHCC	D30
PWHCCFPV	D31
PWHCCRPV	D32

CODE	PAGE
PWHCP	D40-41
PWS	K14
Q	
QP	N10
QR	M18
QST	N11
R	
R	M27
RB	E16
RBFC	E63
RBFF	E60
RBKCGD	E55
RC	M29
RCDK	E59
RCSK	E58
RCWB	E45
RCWB	H7
RD	C23
RD.CH	C25
RDFC	H11
RDFF	H9
REP	F31
RFBFOL	E61
RFDFOL	H9
RFTFOL	F28
RFVFOL	G62
RFWFOL	D55
RH	D28
RHCP	D40
RIECL	M33
RM	M18
ROT	E46
ROTDK	K18
RP	M33-34
RSK	D53
RSP	M35
RTC	F23
RTCSK	E58
RTFC	F29
RTFF	F28
RTK	C38
RTM	M19
RVFC	G64
RVFF	G62
RWB	E45
RWFC	D58
RWFF	D55
S	
S3S	M24
SB	E8-11
SBA	E14
SBB	E50
SBBC	E13
SBCC	E11
SBDSU	E55
SBDSUK	E55
SBDXROT	E47
SBE	M19
SBEOS	E32
SBM	M21
SBMS	E11
SBMSSK	E50
SBP	M22
SBPBS	E55
SBPBSK	E55
SBUDXROT	E47
SBWBR	E10
SC	M30
SCDK	E53
SCM	M10
SCVCS	M24
SCVLR	M15
SCVM	M12
SDC	D47
SDE	M26
SDI	E54
SDIK	E54
SDXROT	K18
SF	E13
SFA	E14
SFC	E14
SFDM	M13
SGH	D50
SHM	M16
SHO	M20
SK	K13
SM	M19
SOS	D52
SOSSO	D52
SP	M35
SPBTL	D52
SPBEOS	E32
SPCD	E54
SPL	K11
SRK	D52
SRL	M31
SSB	M5
ST	M13
STB	E59
STBC	E62
STDW	C37
STIECL	M33
STL	M32
STLR	M16
STLSTR	M14
STM	M22
STMM	M17
STP	M33
STR	M14
STSTR	M14
STTC	F29
STVC	G63
STWC	D57
STWC	D37
SUM	M25
SUT	E51
SUTK	E51
SWCMSC	D26
SWEOS	D20
SWMSC	D25
T	
TASC	M27
TBE	M19
TBM	M21
TBP	M22
TC	F28
TCA	F12
TCAST	F12
TCS	M24
TEA	F13
TEAST	F13
TEP	F30
TF	F26
TFC	F28
TFD	H5
TFF	F27
TFOL	F27
TIECL	M33
TKD	C39
TKFC	M34
TKFCA	M34
TKFCR	M34
TLL	M33
TLPO	M28
TLR	M14
TOE	C21
TP	N13
TPL	M33-34
TPLSK	E45
TPP	F11
TRC	M30
TRM	M23
TRMM	M17
TS	D45
TSA	D45
TSMM	M17
TSS	D53
TSSH	K14
TTRM	M23
TUK	N12
TV	G25
TVS	K16
TWE	M21
TWR	C30
TWT	I6
U	
U	F1-2, F4, F8
UC	F7
UCAPFO	F4
UCC	F4
UCDS	D44
UCP	D53
UCPWA	D53
UCS	D49
UCSC	D49
UDXROT	G2
UEB	F3
UST	F5-9
UT	E51
UTK	E51
V	
V	M5-8
VADDIV	G58
VB	G12, G63
VBBC	G13
VBD	G14
VBEP	E63
VBP	G15
VBWBT	G15
VC	G11, G63
VCB	C30
VCD	G8-10, G31-33, G37-39, G43-45, G49-51, G54-56
VCDF	G9, G33, G39 G45, G51, G56
VCN	G5
VCR	C30
VCV	C30
VDA	G12, C36
VDDK	G59
VDEP	H11
VDO	C36
VDRSK	G59
VDS	G34, G40, G46, G52, G57
VDW	C37
VEP	G65
VEZR	G13-14
VF	C30, G60-61
VFC	G63
VFF	G62
VFOL	G61
VFP	G15
VFPT	G60
VGRB	C18
VGRPL	K10
VGSK	K14
VGSKWA	K14
VGSKWZ	K14
VHB	G16
VHBT	G16
VHLC	G16
VHLCT	G16
VKD	G14
VLC	G17-19
VLCWBT	G17
VMA	G25
VMAS	K16
VMC	G25
VMCS	G25
VMS	G25
VOE	C21
VPL	K12
VPOA	G15
VSB	G2-4, G6, G11, G29-30, G35-36, G41-42 G47, G48, G53-54
VSBA	G6-7
VSBFCC	G4
VSDC	D47
VSF	G6
VSH	C30
VSK	K12
VSRK	G60
VST	C30
VSWTDSK	G58
VTDW	C37
VTEP	F30
VTK	C38
VTL	G17
VTWR	C30
VU	G20-23
VV	G19
VVEP	G64
VVIC	C30
VW	G23, G33, G39, G45, G51, G57
VWB	G24
VWEP	D58
VWR	G24
VWS	K16
VWTDSK	G58
W	
W	D1-3, D46-47
WA	D11-12
WAAG	D14
WAG	D43
WAIN01	K8
WAS	K14
WAST	D13
WB	D56
WBC	D9
WBCST	D10
WBEP	E63
WBL	E45, H7
WC	D37, D56
WCA	D18
WCAS	K14
WCAST	D18
WCD	D22

CODE	PAGE
WCMSC	D26
WCTEP	F32
WDEP	H11
WDM	M23
WDP	C38
WDWC	D23
WEA	D19
WEC	D19
WECS	K14
WEP	D58
WEZR	D15
WEZRS	K14
WF	D53
WFC	D57
WFEP	I10
WFF	D55
WFOL	D54
WFP	D48, I12
WFS	I11
WHB	D32-33
WHBC	D33
WHCC	D29
WHCCFPV	D30
WHCCRPV	D31
WHCP	D37-41
WHCR	D38
WHCV	D35
WHMC	D36
WHMCP	D40-D41
WHMM	D36
WHMSV	D34
WHVC	G1
WHVCD	G1
WHVD	G2
WHVOL	G1
WHVOR	G1
WHVS	K16
WIAC	D11
WIACS	K14
WLBF	D45
WMB	D27
WMC	D24
WMCD	D26
WMCDE	D27
WMCE	D25
WMS	D27
WMSC	D25
WMSP	D46
WMSPBS	K14
WMTK	E65, F33, G67, H13, I12
WOAC	D11
WOACS	K14
WOC	D21
WODWC	D23
WOE	C21
WOEZS	K14
WPFEP	I10
WPFP	I12
WPFS	I11
WPL	K9
WPP	D46
WPPST	D46
WR	C31, D3
WRS	K14
WRTHG	D4
WS	D50, K14
WSC	D23
WSGH	D50
WSIWS	K14
WSK	K9
WSM	M19
WST	D5
WSVWB	K16
WTCDC	E54
WTCDCK	E54
WTCDK	E54
WTDK	E48
WTDSK	F26
WTEP	F30
WTHARC	N1
WTHG	D4
WVEP	G64
WWEP	D58
WWH	D22
WWR	D47
WZEP	F31

X

XLACM	M10
XLCVM	M12
XLFDM	M13
XLSTCM	M11
XS	C31-32
XSG	C32



KraftMaid®
KITCHENS FOR THE **REAL** LIVING ROOM®

© 2017 Masco Cabinetry LLC.
All Rights Reserved.
Specifications subject to change without notice.

K-Cup® is a registered trademark of
Keurig Green Mountain, Inc.

Rubbermaid® is a registered trademark
of Rubbermaid Incorporated.

OXO is a product of OXO International, Ltd.

The photography and color samples shown in this book have been reproduced as accurately as printing technologies permit and are for representation only. To ensure the highest satisfaction, we strongly recommend you view an actual product sample prior to ordering cabinetry.

KM-TMVSC0817