J 350 CNC

INSTALATION, POWER-ON, OPERATION
&
MAINTENANCE MANUAL
&
SPARE PARTS

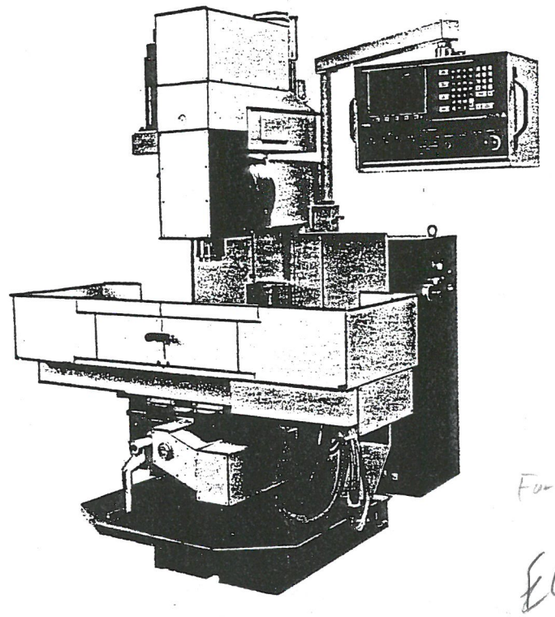

For Service call Jim at
ELLISON
1-414-523-3400

TREE MACHINE TOOL CO., INC
Office-1600 Junction Avenue
Shipping/Receiving-1306 Lockwood Ave.
Racine, Wisconsin 53403, USA
Telephone 414/635-7500
Fax 414/635-7501

WARRANTIES

1. MECHANICAL WARRANTY:

TREE warrants with regard to equipment manufactured by TREE that within one year from the date of shipment from its factory if the equipment is in the possesion of the original user, TREE will replace or repair, at its option, free of charge, any part or parts witch upon its examination are found to be defective in workmanship or material.

THE WARRANTY STATED HEREIN IS IN LIEU OF ALL OTHER WARRIANTIES, EXPRESS OR IMPLIED, OR MERCHANTABILITY OR OTHERWISE, AND AND OF ALL OTHER LIALIBITIES AND OBLIGATIONS ON TREE'S PART, AND TREE EXPRESSLY DENIES THE RIGHT OF ANY OTHER PERSON TO INCUR OR ASSUME FOR TREE ANY OTHER LIABILITY IN CONNECTION WITH THE SALE OF EQUIPMENT BY US. TREE'S OBLIGATION UNDER THIS WARRANTY SHALL BE STRICTLY AND EXCLUSIVELY LIMITED TO FURNISHING LABOR AND MATERIALS REQUIRED FOR REPAIRING OR REPLACING PARTS WHICH ARE DETERMINED TO BE DEFECTIVE ON INSPECTION BY OUR AUTHORIZED REPRESENTATIVE.

The determination of TREE's representative shall be final. TREE assumes no responsibility for reimbursing repair or replacement costs incurred without TREE's prior written authorization or prior to a determination by TREE's authorized representative. All costs of packing and shipping defective parts and/or replacement of repaired parts shall be paid by you. If in case TREE's authorized representative determines in his sole and final discretion that the nature of the defect precludes remedy by repair or repacement of parts, TREE reserves the right to satisty its warranty obligation in full by refunding the full purchase price on the return of all equipment to TREE, freight prepaid. In no event shall TREE's liability under this alternative exeed the purchase price paid for the equipment.

2. SOFTWARE WARRANTY:

TREE MACHINE TOOL CO., INC. MAKES NO WARRANTIES WHATSOEVER, WHETHER EXPRESS OR IMPLIED, WITH REGARD TO MERCHANTABILITY OR FITNESS FOR PURPOSE OF SOFTWARE SOLD OR LICENSED PURSUANT TO THIS AGREEMENT. CUSTOMER A KNOWLEDGES THAT TREE PROVIDED SOFTWARE IS OF SUCH COMPLEXITY THAT PROBLEMS MAY BE ENCOUTERED IN UTILIZATION OF THE SOFTWARE. AS TREE'S SOLE RESPONSIBILITY, AND AS CUSTOMER'S SOLE REMEDY, TREE, FOR A PERIOD OF NINETY (90) DAYS AFTER DELIVERY OF SOFTWARE WILL PROVIDE REASONABLE PROGRAMMING SERVICES TO CORRECT DOCUMENTED CODE ERRORS WHICH TREE'S DIAGNOSIS INDICATES ARE CAUSED BY A DEFECT IN AN UNALTERED VERSION OF THE DELIVERED SOFTWARE. THE EXPRESS OBLIGATION TO REMEDY DOCUMENTED CODE ERRORS STATED ABOVE IS IN LIEU OF ALL LIABILITIES OR OBLIGATIONS OF TREE FOR DAMAGES SUSTAINED BY TREE'S CUSTOMER, WHETHER GENERAL, SPECIAL, CONSEQUENTAL OR OTHERWISE INCLUDING, BUT NOT LIMITED TO, DAMAGES RESULTING FROM WORK SPOILAGE MACHINE DAMAGE, PRODUCTION DELAYS, LOST PROFITS, OF LOST OPPORUNITY ARISING OUT OF THE DELIVERY, USE, OR OPERATION OF TREE PROVIDED SOFTWARE, TREE'S LIMITED OBLIGATION TO CORRECT DOCUMENTED CODE ERRORS SHALL TERMINATE AND BY VOID IF CHANGES OR ADDITIONS TO TREE PROVIDED SOFTWARE MATERIALS ARE MADE BY CUSTOMERS UNLESS CUSTOMER HAS OBTAINED THE PRIOR WRITTEN CONSENT OF TREE TO MAKE CHANGES OR ADDITIONS TO THE SOFTWARE.

3. LIMITATION OF LIABILITY:

IN NO EVENT SHALL TREE BE LIABLE TO A PURCHASER FOR LOSS OF PROFITS, LOSS OF USE, OR DAMAGES OF ANY KIND BASED UPON A CLAIM FOR BREACH OF WARRANTY OR FOR FAULTY WORMANSHIP OR MATERIALS, INCLUDING WITHOUT LIMITATION CONSEQUENTAL DAMAGES AND INCIDENTAL DAMAGES EXCEPT AS THEY MAY BE IMPOSED BY LAW IN THE CASE OF PERSONAL INJURIES FROM "CONSUMER GOODS".

Seller's warranties as set forth above shall not be enlarged, diminished or affected by, and no obligation or liability shall arise or grow out of Seller's rendering of technical assistance or service in connection with purchaser's order of the equipment furnished.

TABLE OF CONTENTS

PART 1

PART 2

SECTION V. MECHANICAL 2 - 16

PART 3

SECTION I. INSTALLATION

A. INCOMING INSPECTION

Any machine is subject to vibration during shipment. This causes tihings to loosen, or break, and because of this, it is very important you do a psysical inspection upon receiving your machine tool:

1. Make an external damage report. If the heavy wooden skid on which the machine was shipped is damaged, your machine has all the signe of being handled toughly. Check the outside of the machine thoroughly.

2. Open all electrical enclosure and make sure all components and panels are securely fastened. Report any and damages or missing parts immediately to Tree Machine Tool Co.Inc.

B. FOUNDATION - FLOOR PLAN

The J 350 CNC is a precision machine tool. Your choice of for the machine will help the machine consistenly maintain accuracy: Foundation and temperature.

1. Foundation

The machine does not require an isolated foundation but is should be placed on only one slab of concrete, not placed over a seam or crack in the floor. It is optional whether you want to lag the machine to the floor. The level screws have 21mm, (.827) clearance holes.

2. Temperature

Although air conditioning is not a requirement, it is better from a reliability standpoint that the machine should not be kept as cool as possible. The machine should not be placed in direct sunlight, near heating or air conditioning ducts, or near ouside doors that could cause wide temperature changes. Also, DO NOT place material on top of electrical cabine ts. It is important that the tempetature remain constants around the machine.

C. RIGGING - LIFTING OF THE MACHINE

To lift the machine, you can use ropes and steel bars fitted through the hole provided for this purpose in the column or a rope, which you first place from the back around the column and then cross in the area over the vertical knee guides -see Fig.#1. In this point, pad the rope appropriately so as to prevent damage of the paint where the rope touches the column during lifting.

D. LEVELING

You will need four plates (which are not provided with the machine) to be placed under each of the four corners. The plates are to be made of steel and be 4"x4" square by 3/8" thick. The purpose of these plates is to prevent putting a concetrated load on the concrete floor. If you are lagging the machine in place, you will also need to put a clearance hole in the center of each plate for the lag bolt. The level should be centered on the table, the table centered on the saddle, and the saddle centered on the knee. The knee does not have to be centered on the column, but the knee must be locked when leveling the machine. The machine can be leveled with a .001/foot level and should sit squarely and firmly on the leveling plates.

E. GROUNDING

1. Purpose

Grounding may be defined as low impedance matallic connection in the earth. Grounding of the ground buss on a machine tool is required for two reasons:

a. To prevent hazards to personnel in case of a breakdown between current carrying parts and the exposed metal surfaces.

b. To minimize the effects of electrical noise on the control system.

Electrical noise from any source, whether it be the power line, an adjacent machine, or crosstalk inside the control is transmitted by condoction, inductive or capacitive coupling, or radiation. It is very important to maintain the electrical enclosure and panels, conduits, wire shields, and machine mumbers at zero potential and to also provide a return path to earthground for noise currents in order to effectively shield the esnsitive logic circuits from electircal noise. Ground screw for ground machine in the electrical box.

2. Reason

Although a utility ground such as a cold water pipe is generaly an adequate ground for safety purposes, it is not however generally adequate to minimize the effcts of electrical noise. In many instances other electrical equipment is also connected to this same ground, and therefore, it carries the transient electrical noise currents associated with all of the attached equipment. All this noise current causes a voltage change to be developed in the pipe because of its resistance and reactance. The voltage from the ground buss to the machine tool is, therefore, a fonction of the noise current flowing at any moment. Because of this groundshift voltage disturbances are produced which may be coupled into the computer and cause the control to malfunction.

3. Requirement

A separate "ground electrode" should always be used to ground a machine tool. It may consist of a drive rod (solid copper or copper clad, 1/2" or larger) or buried plate, and should be instelled per the National Electrical Code, section 250-83, as near as possible to the ground buss. This type of ground will provide a low impedance, stable, and noise-free ground needed to minimize the effects of noise on the control and also provide a sefequard for personnel.

Tree Machine Tool Co. Inc. requires a separate "ground electrode" for grounding its machine tools. Maximum permissable ground resistance is 5 ohms. Ground rod placement should be at a point as close to the machine as possible. For distance of ten (10) feet or less, a green THHN 8 gauge wire or larger should be used to connect the "ground electrode" to the machine ground buss. For distances of ten (10) feet or more, a green THHN 6 gauge wire or larger should be used to connect the "ground electrode" to the machine ground buss. Improper grouding of the machine may effect the machine warranty.

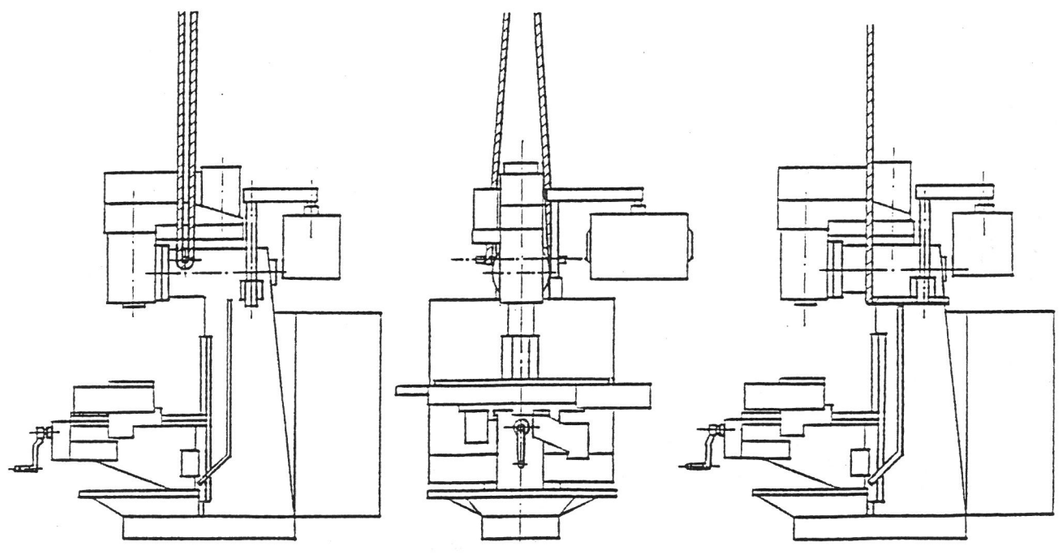

FIGURE #1

F. POWER REQUIREMENTS

All J350 CNC machines come standard from factory requring 230 volts AC 3 phase, 60 Hertz, 30 amp electrical service.

If your facility does not have 230 volts AC, a transformer will have to be installed external to the machine to change the voltage at your facility to 230 volts AC. Please contact Tree Machine Tool Co. Inc. at this time if your facility does not have the required electrical service.

This electrical service must be brought to the machine using a THHN wire type or equivalent and be 10 gauge or larger. It is the customers responsibility to provide clean and stable power to the machine. Lack of clean and stable power to the machine may effect the warranty.

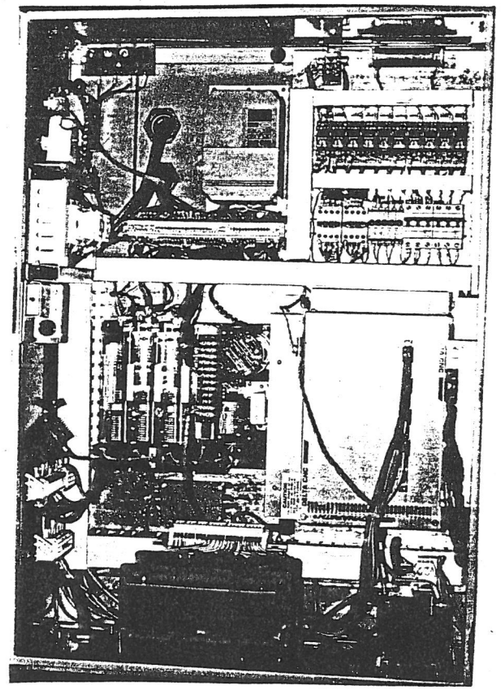

Electrical panel
PHOTO #1

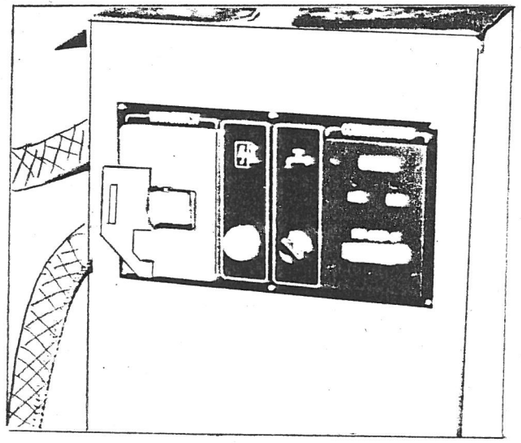

Communication panel
PHOTO #2

G. AIR REQUIREMENTS

The J350 CNC requires 80 PSI minimum, 100 PSI maximum of regulated, filtered, dry air. The line capacity to the machine should have 3-5 cubic feet per minute.

It is the customer's responsibility to furnish clean, dry air in the proper amount and pressure to the machine.

H. CLEANING

All exposed metal surfaces have been coated with a rust preventive before shipping from the factory. This rust preventive must be removed before operating the machine. It is best to use clean, dry shop cloths with a mild solvent.

DO NOT USE WATER or water base solutions when cleaning the machine.

I. SHIPPING BRACKETS

When transporting, the position of the knee and those of the NC controled X and Y axes are arrested by means of the transport bracket attached to the brace and to the longitudinal table.

To the longitudinal table is also attached the brace supporting the control system panel.

The transport bracket and the brace must be dismounted from the machine.

J. ELECTRICAL INSPECTION

During shipping, many elecrtical connections can work loose.

It is very important that all electrical connections be checked and tightened before operating the machine.

If an electrical connection is loose, it can cause arcing, computer lockups and other intermittent type problems.

If a few minutes are taken now to tighten every electrical connection in your machine, it may save hours of downtime and trouble- shooting later.

K. J350 CNC SPECIFICATIONS

RANGE

Table travel X-axis	26" (660mm)
Saddle travel Y-axis	14" (356mm)
Quill travel Z-axis	6" (150mm)
Knee travel (manual)	16.5" (420mm)
Throat distance	14.5" (370mm)
Spindle gageline to table top	0-16.5" (0-420mm)
Maximum load	441lbs (200kg)

TABLE

Overall size	10x39.4" (250x1000mm)
T-slots	3x0.625"

SPINDLE

Motor	4HP (3kW)
Taper	CAT 40
Speed range (two speed)	
Ranges	2-speed
Quill diameter	4.3" (110mm)

PERFORMANCE

Traverse rate X,Y,Z-axis	276 IPM (7m/min)
Feedrates	1-100IPM (2.5-2500mm/min)
Positioning accuracy	+/-.0005"
Positioning repeability	+/-.00015"
Resolution	.001"
Axis drive (DC servo motor)	BALDOR
Drilling capacity (mild steel)	1 cu.in/min.(16.38cm^3)
Max.drilling diameter	1.93" (49mm)
Milling capacity (mild steel)	7 cu.in/min.(114.7cm^3)

SPACE AND WEIGHT

Floor area (doors open)	82"x94.5" (2087x2400mm)
Floor area (doors closed)	82"x75.5" (2087x1920mm)
Height	90.5" (2300mm)
Weight (shipping)	3087lbs (1400kg)

POWER

Electrical supply , 60Hz, 3-phase	230V

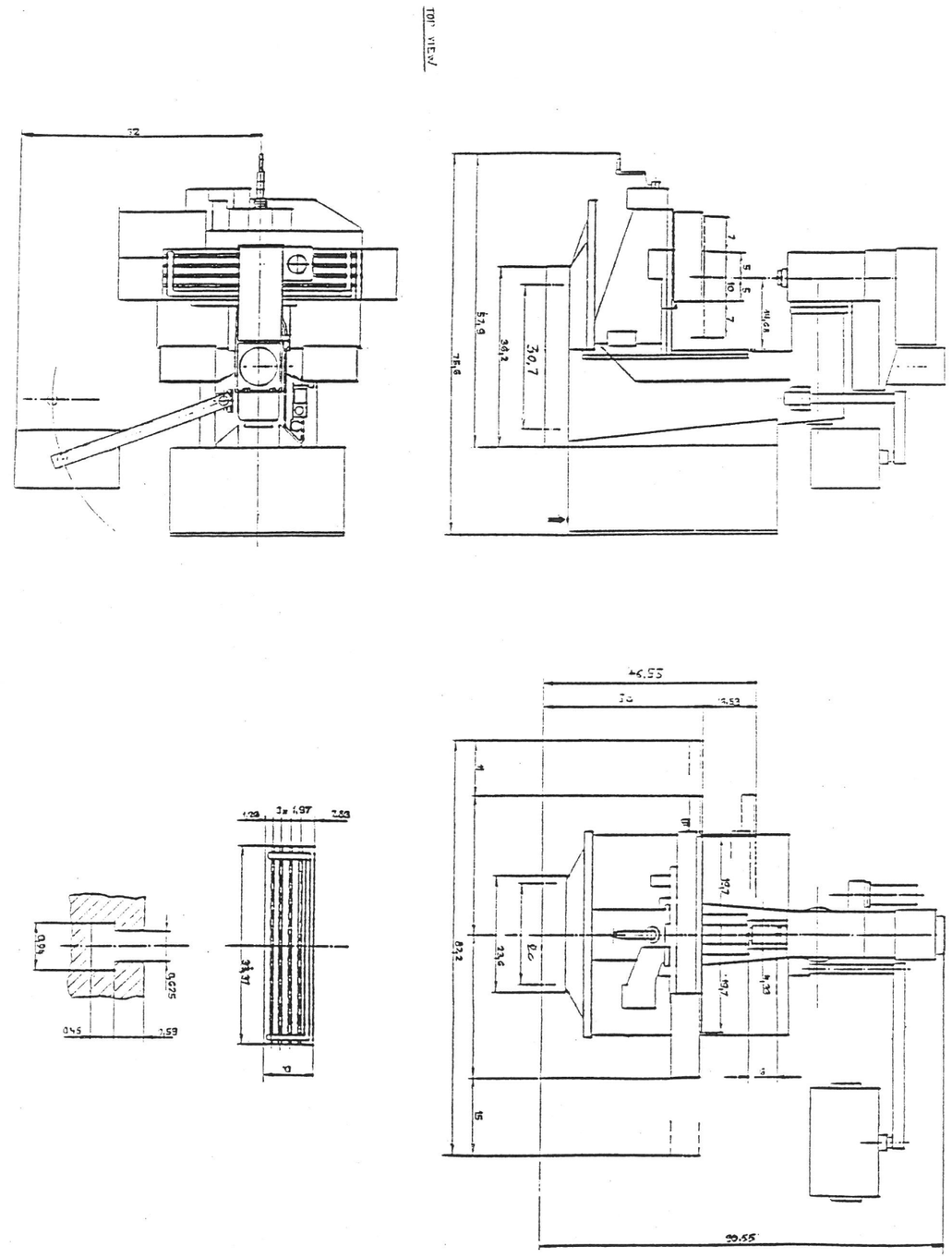

DIMENSIONAL DRAWINGS

FIGURE # 2

SECTION II. POWER-ON PROCEDURE

POWER MUST BE DISCONNECTED BEFORE PERFORMING THE FOLLOWING:

A. INCOMING VOLTAGE

Incoming voltage should be 230 volts AC, 3 phase, 60 Hz. with an allowable minimum of 210 volts AC, to allowable maximum of 250 volts AC.

NOTE : If your machine is equipped with a panel mounted transformer, it is an auto transformer and changing the taps is not necessary, see page 1 of the electrical schematics (photo #1).

B. TURN POWER ON and re-check voltages.

When at recommended voltage you are ready to proceed.

C. READY TO RUN

1. Check list:

   a. Machine is securely installed.

   b. Machine is cleaned of rust preventive.

   c. Electrical connections have been checked.

   d. Proper grouding is installed.

   e. Machine is properly lubricated.

   f. Incoming voltage is proper.

   g. Enclosure doors are securely closed.

   h. <u>THE TRANSPORT BRACKET AND THE BRACE ARE DISMOUNTED, AND HEADSTOCK MUST BE IN VERTICAL POSITION.</u>

2. Power On - DynaPath Systems Delta 40/50

   a. Turn main breaker on (located on back of left hand side enclosure).

   b. Turn "Power On" switch on (located on right side of operator station).

   c. "E Stop" pushbutton must be released.

   e. Drive Enable contactor should enable.

   f. The "Fault" or "Message" screen to Jog Mode page will be flashing until all three axes are referenced.

D. MACHINE REFERENCE

1. Push "Mode Select 0".

2. Jog off of any home switch.

3. Press "R" to select the Reference Zero operation.

4. Press "Cycle Start" pushbutton to reference the X, Y and Z axes automatically, OR actuate the X, Y and Z Jog Switch (plus <+> direction) to reference each axis individually.

5. Once an axis has contacted its reference point, the control will halt on the next marker pulse. Each axis readout will reset.

NOTE: You will perform this operation to reference the machine axis <u>each time the control is turned ON.</u> It establishes a reference position for Home coordinates and software travel limits checking.

NOTE: If the machine is not referenced properly, the overtravel safety switches will engange.

NEVER remove or re-adjust overtravel safety switches or machine will be damaged.

MACHINE ZERO SHOULD NEVER BE USED.

E. PROCEDURE TO REMOVE MACHINE FROM OVERTRAVEL SAFETY SWITCH (for those machine with acces holes in covers)

1. J350 CNC X and Y axes:

   a. Remove threaded plug in motor mouting bracket cover (located in line with drive motor centerline)

   b. Using a special hex socket wrench rotate drive motor in order to move machine slide off limit switch.

   c. Replace plug.

CAUTION : Do not overtighten, threads in cover coul be damaged.

NOTE : NEVER REMOVE OVERTRAVEL SWITCH OR TRIP DOGS.

2. J350 CNC Z axis:

   a. Using a special hex socket wrench on bottom of Z axis ballscrew, manualy retate ballscrew in proper direction to remove quill from hard travel. (Acces hole is located approximately 6" behind quill centerline.)

NOTE : NEVER REMOVE OVERTRAVEL SWITCH OR TRIP DOGS.

SECTION III. MACHINE OPERATION

A. JOG MODE - MODE SELECT 0

```
JOG MODE

0-SLOW              POSITION
1-MEDIUM             X+000 0001
2-FAST               Y-000 0001
3-RAPID              Z+000 0000
4-0 0001 INCH        A+000 0000
5-0 0010 INCH
6-0 0100 INCH       DISTANCE MOVED
7-0 1000 INCH        X+000 0000
8-1 0000 INCH        Y+000 0000
9-ZERO SET           Z+000 0000
H-HOME               A+000 0000
M-MACHINE ZERO
R-REF ZERO          SPINDLE SPEED
                     50000 RPM
```

```
JOG MODE

0-SLOW              POSITION
1-MEDIUM             X+0000 003
2-FAST               Y-0000 003
3-RAPID              Z+0000 000
4-00 002 MM          A+0000 000
5-00 020 MM
6-00 200 MM         DISTANCE MOVED
7-02 000 MM          X+0000 000
8-20 000 MM          Y+0000 000
9-ZERO SET           Z+0000 000
H-HOME               A+0000 000
M-MACHINE ZERO
R-REF ZERO          SPINDLE SPEED
                     50000 RPM
```

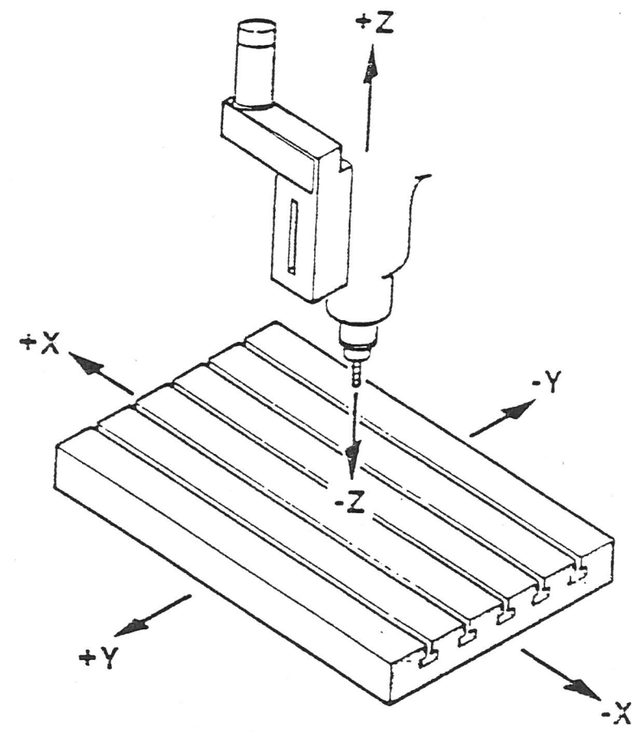

X AXIS - TABLE LEFT (+) AND RIGHT (-).
Y AXIS - TABLE OUT (+) AND IN (-).
Z AXIS - SPINDLE UP (+) AND DOWN (-).

FIGURE # 3

1. Jog Mode Introduction

The Jog Mode is a primary operation mode. Select this mode to poition the axis by choosing a rate, increment of motion, or specyfying return to an assignable Home position. This mode is also selected to reference the axes set a part program datum zero point.

2. Jog Display Screen

On entry to Jog Mode, the upper left screen appears when inch units are selected in "Set Up" mode. The upper right screen appears with metric selection.

3. Position Display Registers

The upper right column, Jog Mode screen, displays each axis position. The signed coordinate associates the tool tip's position to the origin of the X, Y and Z axes. The coordinates relate to where each axis was set to zero. Any active tool lenght or cutter radius comensations will also be reflected by these registers. The letter A identifies a auxiliary axis if installed in your machine.

4. Distance Moved or Axis Lag Display

Each time you enter Jog Mode, the "Distance Moved" display is set to zero. This display retains the distance each axis has moved relative to the position on the entry to this mode. Use this display to track how far you have jogged.

An "Axis Lag" display replaced the "Distance Moved" display if TM4 (test mode 4) has been selected in the set up mode. This display assists the machine installer to adjust the servo drives compliance to motion commands issued by the control.

5. Spindle Speed Display

If the spindle is controlled by a part program, this display will identify the command spindle speed. If the spindle override potentiometer is adjusted, the programmed speed will also be adjusted.

6. 0, 1, 2, 3 - Continuous Jog

Press 0, 1, 2, or 3 ot enable continuous jog at a Slow, Medium, Fast, or Rapid rate. All jog mode selections will be confirmed or "backlighted" in a reverse video.

NOTE : In your Tree machine, the control has been locked out of Rapid rate of jog, until the machine has been refe renced.

7. Jog Mode Rates are:

Identifier	Selection	X/Y/Z or Aux. Linear axis Rate(1pm/mmpm)	Auxiliary Rotary Axis Rate(degrees/min)
0	Slow	1/25	10°
1	Medium	10/254	100°
2	Fast	100/2540	1000°
3	Rapid	X 325/8125 Y,Z 250/6350	2880°

Once the rate has been selected,an axis is jogged by pressing a jog will continue at the selected rate until the key is released. The X and Y axes may be jogged simultaneously, but neither may be jogged simultaneously with Z.

The Feedrate Override potentiometer can modify the Slow, Medium and Fast jog rates. Control is extended to Rapid rate when TM1 (test mode 1) is elected in the Set Up Mode.

4, 5, 6, 7, 8 - Incremental Jog

Press 4, 5, 6, 7 or 8 to enable the control to position an axis over a precise increment distance, then halt. The increments are:

Identifier	X,Y,Z Aux. Linear Axis Increment(inch/mm)	Auxiliary Rotary Index Axis 1°/5°	Auxiliary Rotary Contour Axis
4	0.0001/00.002	1°/5°	.001°
5	0.0010/00.020	10°/10°	.01°
6	0.0100/00.200	100°/100°	0.1°
7	0.1000/02.000	100°/100°	01.0°
8	1.0000/20.000	100°/100°	10.0°

Once the increment has been selected, an axis is jogged by pressing a jog key. The jog continues until the axis has moved the selected incremental distance, then halts. One axis may be incrementally jogged at a time. Incremental jogs occur at 10 ipm (254 mpm), adjustable with the Feedrate Override potentiometer. To temporarily inhibit, for example, a one inch incremental motion, switch the feedrate override potentiometer OFF. The move may be aborted by pressing MOTION STOP.

CAUTION: You must conform to Tree's prescribed initialization sequence to avoid damage to the machine or injury to personnel.

The Set Up mode section describes initialization activities and refers to the following operations:

<u>H - Return to Home Position</u> - This selection allows each axis to be returned at rapid feed rate to its home coordinate. Home is a position that allows the spindle to clear the part for tool change operations or fixture adjustment. Its dimensions are assigned in the Set Up mode. Choose this option to return to Home position.

<u>R - Reference Zero Operation</u> - see page 1-9, D.Machine Reference.

<u>M - Machine Zero Operation</u> - Disabled

8. Part Program Zero Set

This operation should not be attempted until initialization activities have been completed, tool and fixture offsets have been entered, a reference tool has been loaded into the spindle, and the fixture and work are in place.

This operation sets the part program zero datum point and assigns a datum zero position to the part program. After this operation, the control will interpret part program commands with respect to this zero and display program coordinates on the video screen. To perform this operation:

a. A reference tool is in spindle.
b. Jog each axis, move the tool tip to the part program data zero position.
c. Press 9 to select the ZERO SET operation.
d. Actuate each axi jog switch to identify that the axis is at the zero set position. Each corresponding Position Display register will reset.

NOTE : For further information, PLEASE consult your programming manual.

B. ELECTRONIC HANDWHEEL OPTION (for DynaPath control)

The electronic handwheel option consists of an encoder with a wheel graduated from 0 to 99 and a five position selector switch: X, Y, Off, Z, A. To activate, go into Jog Mode (Sel. 0), enter 4, 5 or 6 and move the selector switch to the axis desired. Following are the handwheel ratios:

4 = .0001" per step or .01 per rev.of handwheel
5 = .001" per step or .1 per rev. of handwheel
6 = .01" per step or 1.0 per rev. of handwheel

C. SPINDLE

The J350 CNC is equipped with a safety interlock that will not allow the spindle to engage unless the tool is clamped and Cycle Start is pushed.

D. FAULT/STATUS MESSAGES

STATUS SCREEN MESSAGES

The following mesages define the current condition of selected initialization parameters or EIA model variables.

X, Y, Z, A Not Reference Zeroed - Cautions that a Reference Zero operation has not yet been performed.

EIA Status Messages - These messages appear on page 2 of the status screen display.

FAULT SCREEN MESSAGES

The following errors will halt operations and generate a fault display. You must press Reset to clear the message and clear the fault condotion before you may begin operations again.

Emergency Stop - You must reset the control and correct the condition before continuing operations. Position information is retained unless a processor halt or memory failure has caused the halt.

X,Y,Z,A Servo Error - Allowable following error has been exceeded, the axis has failed to respond to a servo command. A travel limit switch has been contacted or the servo drive has shut down.

Lube Level Low - Check lube reservoir, refill with way lube

Air Pressure Low - Check air supply, air should be at 80 PSI.

Spindle Switchis Turned Off - SSO switch is at 0 percent, turn SSO switch up.

Spindle Not Up to Speed - Check spindle drive unit.

Transfer to Next Event Inhibited - Indexer fault

Axis Needs to be Referenced - Reference machine

Improper Spindle Speed - A spindle speed is programmed that is out of range for the machine.

Pic Rev - This message shows the date of the machine interface program when Reset is hit in E-Stop.

E-Stop PB - E-Stop pushbutton is depressed.

Motor Overload - The spindle drive has faulted.

TM5 E-Stop - Test mode 5 is entered, E-stop will automatically occur.

Drawbar is not Clamped - Drawbar cylinder or switch faulted.

Gear Change Timeout - Switch up or down

Spindle Not in Gear - Switch up or down, pneum.valves fault or pneumatic cylinder faulted.

Servo Drive is Off

Air Pressure Lost in Cycle - FRL may be fault.

Press Cycle Start When Air is Back

Servo Drive Overload

PART 2 - MAINTENANCE

FOREWORD

The J 350 CNC machine requires very little maintenance.

In this outline, we will give you a quideline to follow in maintenance of your J 350 CNC. This will be in sections:

Safety, Electrical, Lubrication and Mechanical

SECTION I. SAFETY

Safety is everyone's responsibility. Used properly, the J350 CNC is a very safe machine. Misused, it can be a dangerous one. The following safety reminders applied with good judgement, an added measure of common sense and strick adherence to your company's safety rules will prevent accidens from happening.

A. SAFETY REMINDERS

1. Safety glasses equipped with side shields should be worn at all times.
2. Safety shoes should be worn.
3. Do not ewar neckties, long sleeved shirts, wrist watches, rings, jewerly, etc. when operating the machine.
4. Keep your hands and feet away from moving parts of the machine.
5. Know how to operate the machine safety and properly.
6. Be aware of first aid facilities and use them regardless of the severity of the injury.
7. Manuals are provided with the machine. Read these machine manuals before operating the machine.
8. Manuals should be made available to all operators.
9. Quards and shields should be in place at all times.
10. DO **NOT** work near a revolving cutter or spindle, stopping the spindle is a good work habit.
11. DO **NOT** put hands into the head of a running machine.
12. Air hoses must be kept away from all moving parts of the machine.
13. Hazardous conditions concerning the machine should be reported at once.
14. Keep all tools off the machine. Use only the right tools for the right jog.
15. Keep the machine tool and the area around it clean. Avoid slippery floors and debris, remove obstacles, etc.
16. Management personnel have the responsibility aleting operating personnel of any unsafe practices they may observe.
17. The axis drive, along with the spindle drive, must be disabled before attempting to perform maintenance or cleaning
18. Keep all personnel away from the machine while performing maintenance or lubrication, this will stop accidental start-up of the machine.
19. DO **NOT** attempt to brake or slow down moving machine parts with your hands or makeshift devices.
20. The machine should not be left running while unattended.
21. **NEVER** attempt to measure moving work pieces in the machine or near a revolving cutter.
22. Keep the area around the machine and in front of the machine clear of oil, water from coolant, remove all obstacles.

SECTION II. ELECTRICAL MAINTENANCE

Electrical maintenance on your J 350 CNC is a small part of the total maintenance.

NOTES : 1. Remove all jewerly, i. e. wrist watches, rings, etc. before working on electrical maintenance.

2. All electrical preventive maintenance should be done with power OFF. Also, all electrical maintenance should be done by personnel who are properly trained.

3. Open discinnect switch or breaker.

4. Lock main disconnect in open position with a lock for whitch you have a key. This will give positive protection from someone accidentally turning on power while working.

5. Remove all AC power fuses.

6. Have someone stand by the main switch to keep in the open position.

A. MONTHLY MAINTENANCE

1. Keep electrical cabinets clean.

2. Carefully inspect the computer for metal filings, metal filings will cause damage to the computer if undetected.

3. Check all plugs to be sure they are completely in the sockets and all screws are tightened.

4. Vacuum any dust that is collecting in the fans or on any circuitry boards or electrical components. DO NOT USE AIR HOSES TO CLEAN.

5. Check and tighten all electrical connections.

NOTE : Enclosure doors must be kept closed during machine operation, this will assure longer maintenance-free life.

B. QUARTERLY MAINTENANCE

1. Check the axis motor brushes. Replace brushes after 1/3 wear (aproximately 5/16 inch material remaining)

2. Check the armature. The armatures should be a chocolate color with slight tracks in the direction of rotation. Dark or burned colors indicate possible problems.

SECTION III. ELECTRICAL PROCEDURES

A. SET-UP PROCEDURE FOR BALDOR SERVO DRIVES

1. Check the jumpers on the amplifiers and set the pots

Jumpers	P1	1 & 2	closed
	P2	1 & 2	closed
	P3	2 & 3	closed
	P4	1 & 2	closed
	P5	resistor in 5th slot	
	P6	2 & 3	closed
Potentiometer	TP1		
	TP2 (A)	full CCW	
	TP3 (S)	full CW	
	TP4 (T)	factory set (see below)	
	TP5 (R)	4.0kΩ (CW from peak)	
	(C)	full CW	
	(B)	factory set (see below)	

NOTE : Power down the servodrive and disconect the signal input connector before making any measurements.

2. Power up the control and drives and check the voltage on the drive. The Bus voltage should be between 160 and 165 VDC. Use the appropriate secondary taps on the transformer to accomplish this.

3. Reset E-stop, reference machine. Go to mode select 5 (set-up) key in TM4, enter (servo adjust). Then select 0 (Jog). Enter Jog Mode 1 (medium). Set feedrate override pot Max CW (high). Adjust B pot for zero standing axis lag +/- .002 mm.

4. Adjust Position Loop Gain per the set up sheet. To do this use the XADJ, YADJ and ZADJ feedrate axis adjust part program (see example). Use the T pot (tach scaling) to adjust the following error for feedrate 700mm/min (10% traverse rate). The axis lag must be 0.56mm (see "Record the servo drive values).

```
Example:     XADJ   N01 (1)linear mill  X +100  F 700
                    N02 (8)dwell        L 0.5
                    N03 (1)linear mill  X +500
                    N04 (8)dwell        L 0.5
                    N05 (6)repeat       F 1     T 100
                    M06 (9)misc         M00
```

5. Check the following error for rapid traverse (7000mm/min). To do this use the XTADJ, YTADJ and ZTADJ adjust part program.

```
Example:     XTADJ  N01 (0)position     X +100
                    N02 (8)dwell        L 0.5
                    N03 (0)position     X +500
                    N04 (8)dwell        L 0.5
                    N05 (6)repeat       F 1     T100
                    N06 (9)misc         M00
```

B. DYNAPATH GENERAL PROCEDURES - DELTA CONTROL

1. Serial Communications - Translation Cable

If you must prepare a translation cable to mount a connector with standard RS232C pin assigments on your machine, please note the following:

a. The COM1 and COM2 communications connector is located on the system module. It is a 9 contact D type connector with male contacts.

b. The interface connector that may be mounted on the machine is usually a 25 contact D type male connector with female contacts.

c. The translation cable, when fully implemented, requires eight 20-24 AWG conductors. The signals and contact translations are as follows:

SIGNAL	COM1, COM2 CONNECTOR (System module)	MACHINE TOOL CONNECTOR
Transmit Data (TxD)	3	2
Receive Data (RxD)	2	3
Request to Send (RTS)	7	4
Clear to Send (CTS)	8	5
Data Set Ready (DSR)	6	6
Data Terminal Ready (DTR)	4	20
Signal Ground	5	7
Carrier Detect	1	8
Ring indicator	9	

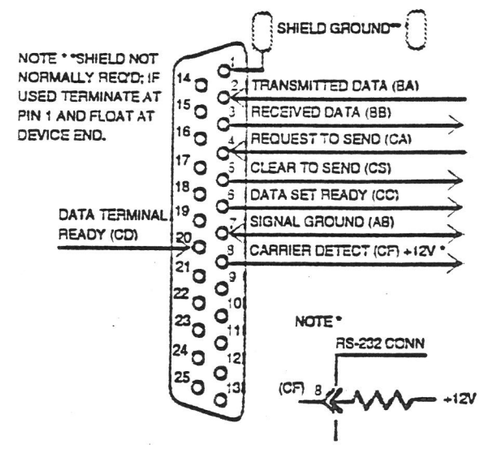

RS-232C Pin connection-
machine interface

FIGURE # 4

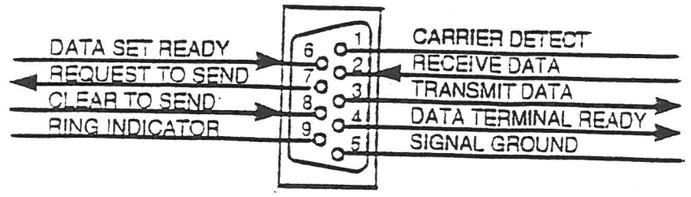

DYNAPATH 9 PIN COM1 and COM2 PORTS

FIGURE # 5

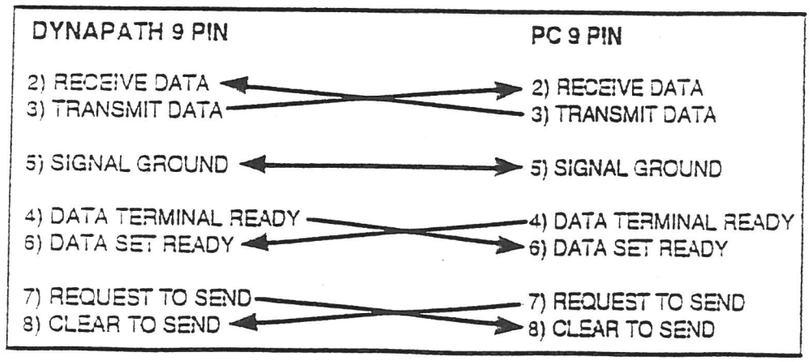

FIGURE # 6

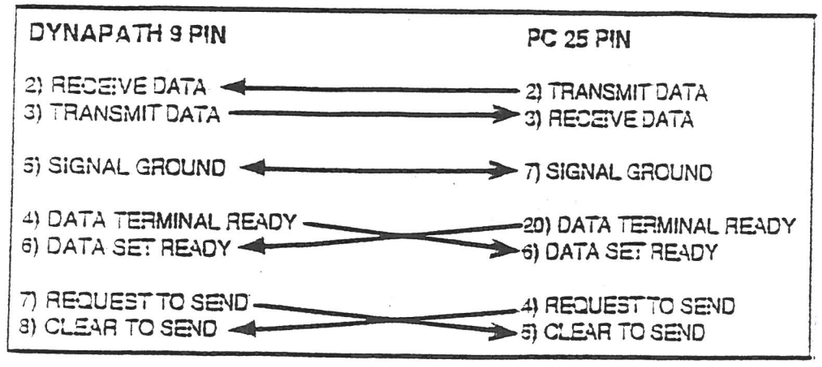

FIGURE # 7

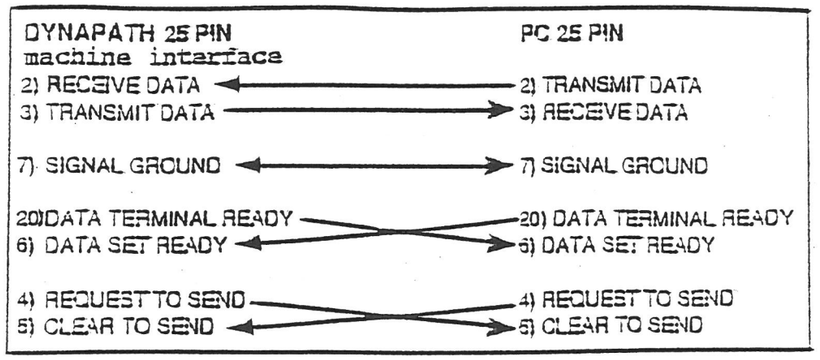

FIGURE # 8

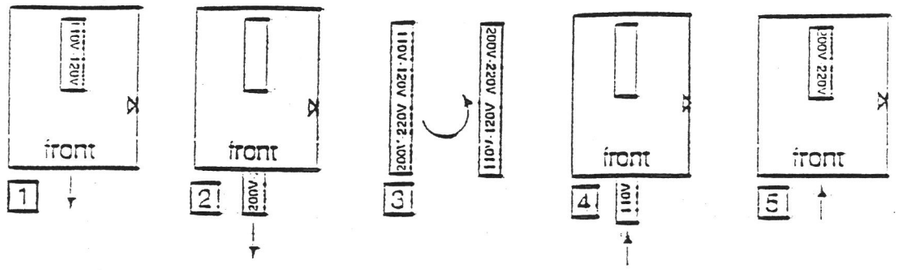

Converting the control 115-230 VAC power input

FIGURE # 9

C. SUBSIDIARY PANEL J 350 CNC

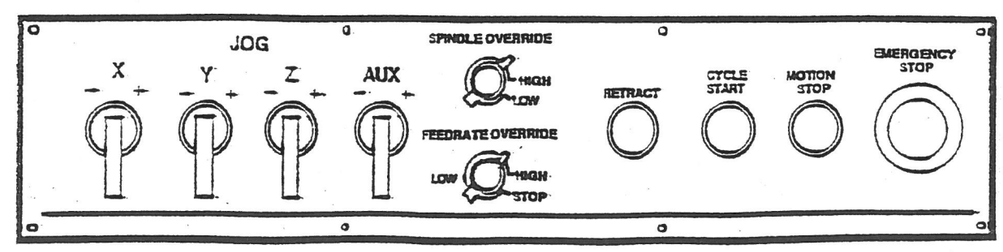

D. ELECTROUNITS

ITEM	NAME	TYPE	
1.	Relay	SCHRACK 460024 5A 250V	1th left
2.	Relay	-"-	2th left
3.	Relay	-"-	3th left
4.	Relay	-"-	4th left
5.	Relay	-"-	5th left
6.	Relay	-"-	6th left
7.	Relay	-"-	7th left
8.	Relay	-"-	8th left
9.	Motor Protector	SCHRACK BE 300006	KNEE POWER
10.			
11.	Magnetic Contactor	EP-M C17 110V, 60Hz	
12.	Magnetic Contactor	EP-M C17 110V, 60Hz	
13.			
14.	Magnetic Contactor	EP-M C17 110V, 60Hz	
15.	Magnetic Contactor	EP-M C9 110V, 60Hz	
16.	Fuses		
17.	Protector	SCHRACK U25A	
18.	Protector	SCHRACK U25A	
19.	Resistor	50 OHM 120W	
20.	Capacitor	TC 252	
21.	Capacitor	TC 252	
22.	Capacitor	TC 252	
23.	Capacitor	TC 252	
24.	Main Switch	TELEMECANIQUE	
25.	Terminal Block		
26.	Terminal Block		
27.	Transformer	230V/105-110-115-120-125V, 2500VA,	
28.	Transformer	230/24V 100VA, 115V 250VA, 110V 50VA	
29.	Filter	TESLA WN 85202	
30.	Axis Drive	BALDOR	
31.			
32.	CNC	DYNAPATH	
33.	Invertor	YASKAWA	
34.	Relay	SCHRACK 460024	
35.	Relay	SCHRACK 460024	
36.	Door Interlock Switch	ZSE	
37.	Push Button Limit Override	EP-P T6ACE54	

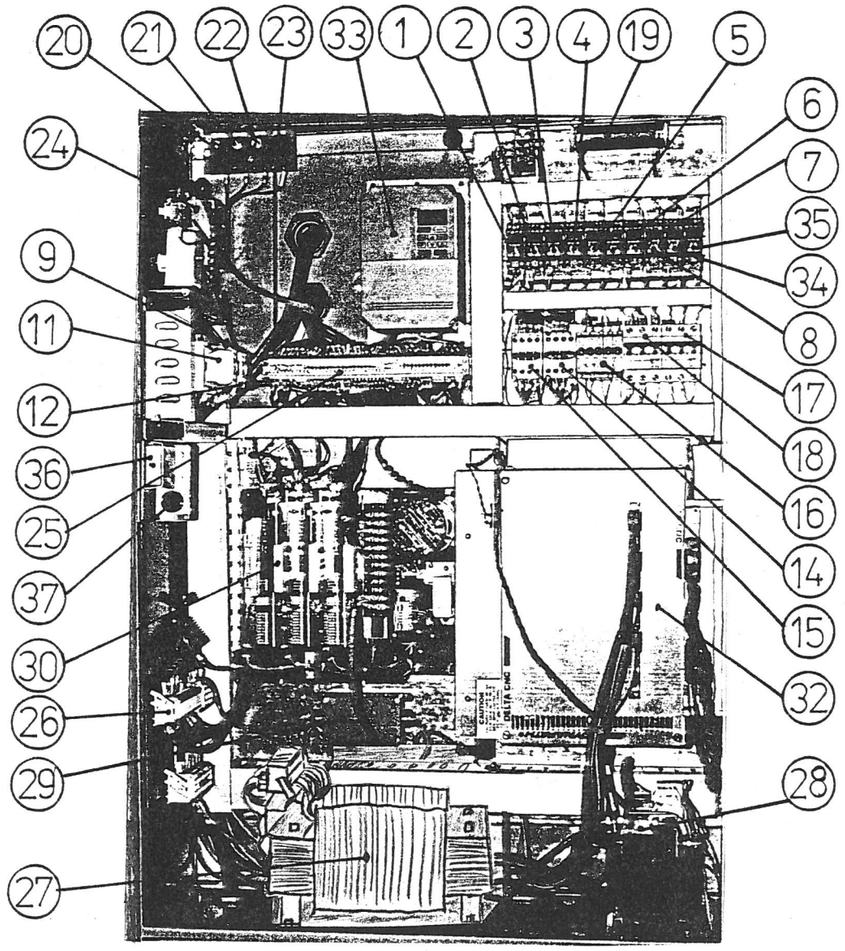

Location of Electric Units

in the Electro-box

FIGURE # 10

E. ELECTRIC DIAGRAMS

E 1 - E 8

F. MARKING OF ELECTRIC UNITS ON MACHINE

QS - main switch, circuit breaker
QF - circuit breaker

FU - fuse
FA - thermal protective relay
KA - auxiliary relay
KM - contactor

SA - rotary switch
SB - button switch
SQ - limit switch
SP - pressure switch

SL - level indicator
TC - transformer
XS - terminal board
VD - diode
HL - indicating lamp
EL - lamp
BR - speed voltage generator
RC - anti-jamming unit, RC-unit
YV - electromagnetic valve
YA - electromagnet
C - capacitor
R - resistor
Z - anti-jamming unit, filter
M - electric motor

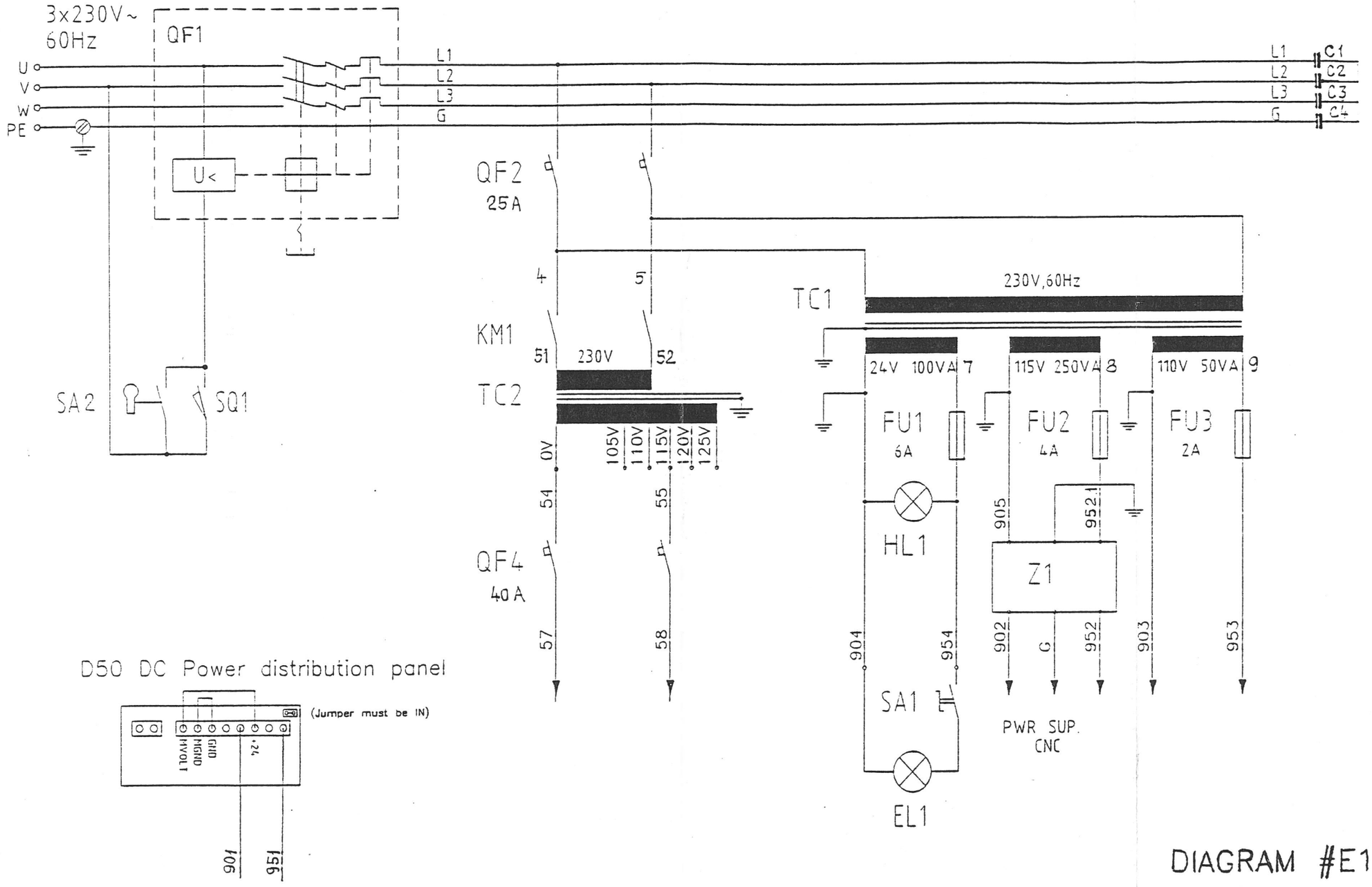

DIAGRAM #E1

J350 65 7254-1 (1)

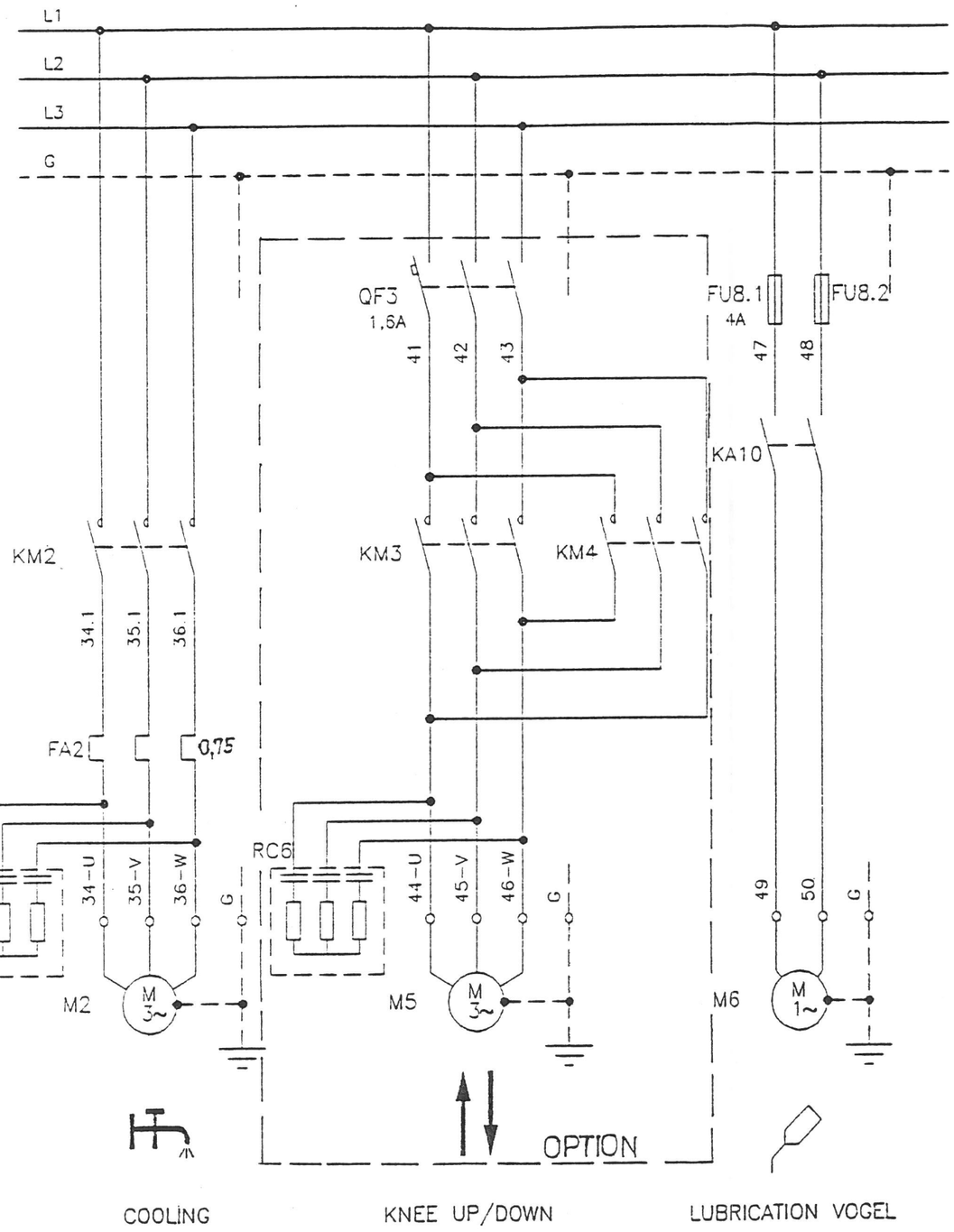

DIAGRAM # E 2

J 350 65 7254 - 2(1)

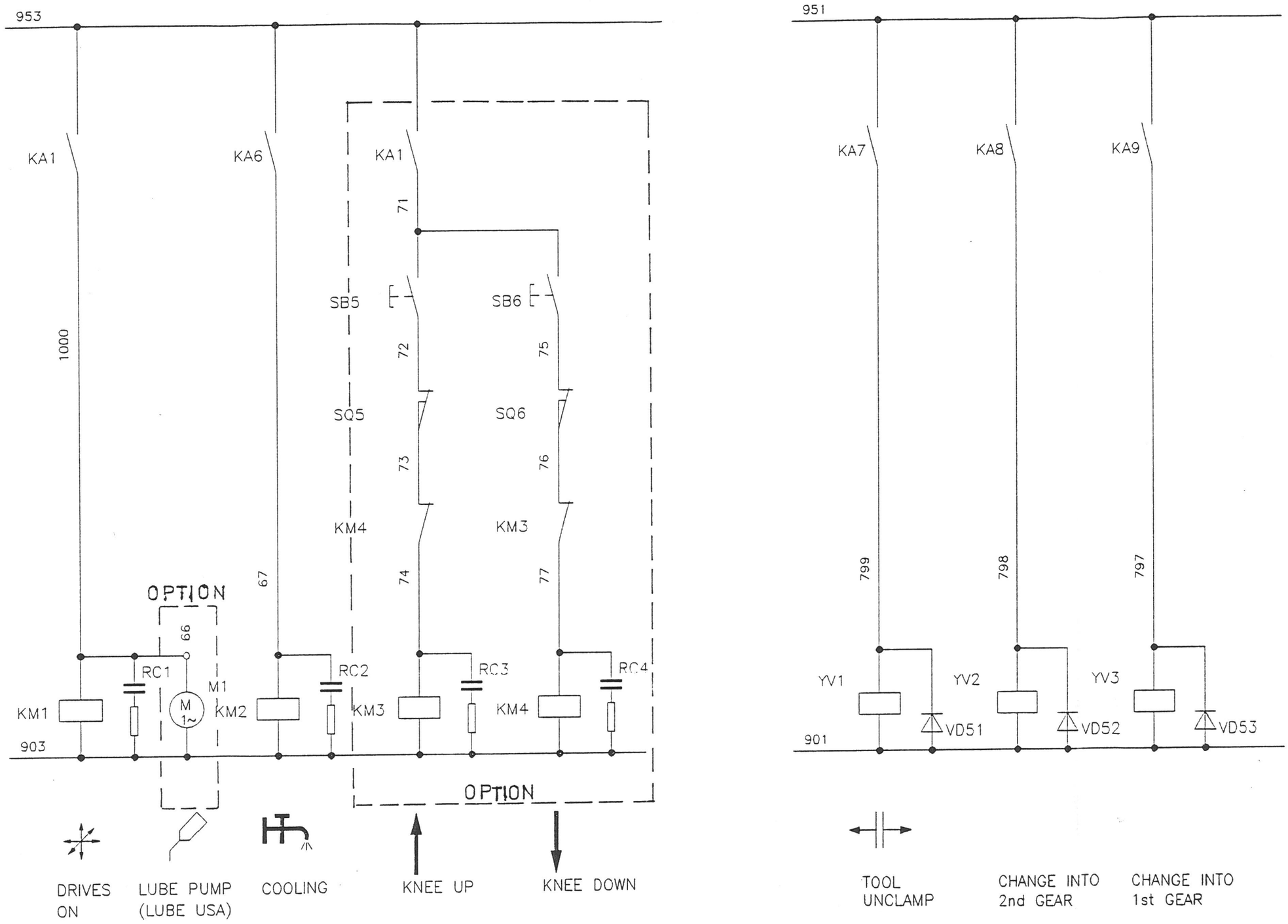

DIAGRAM # E3

J 350 65 7254 - 3 (01)

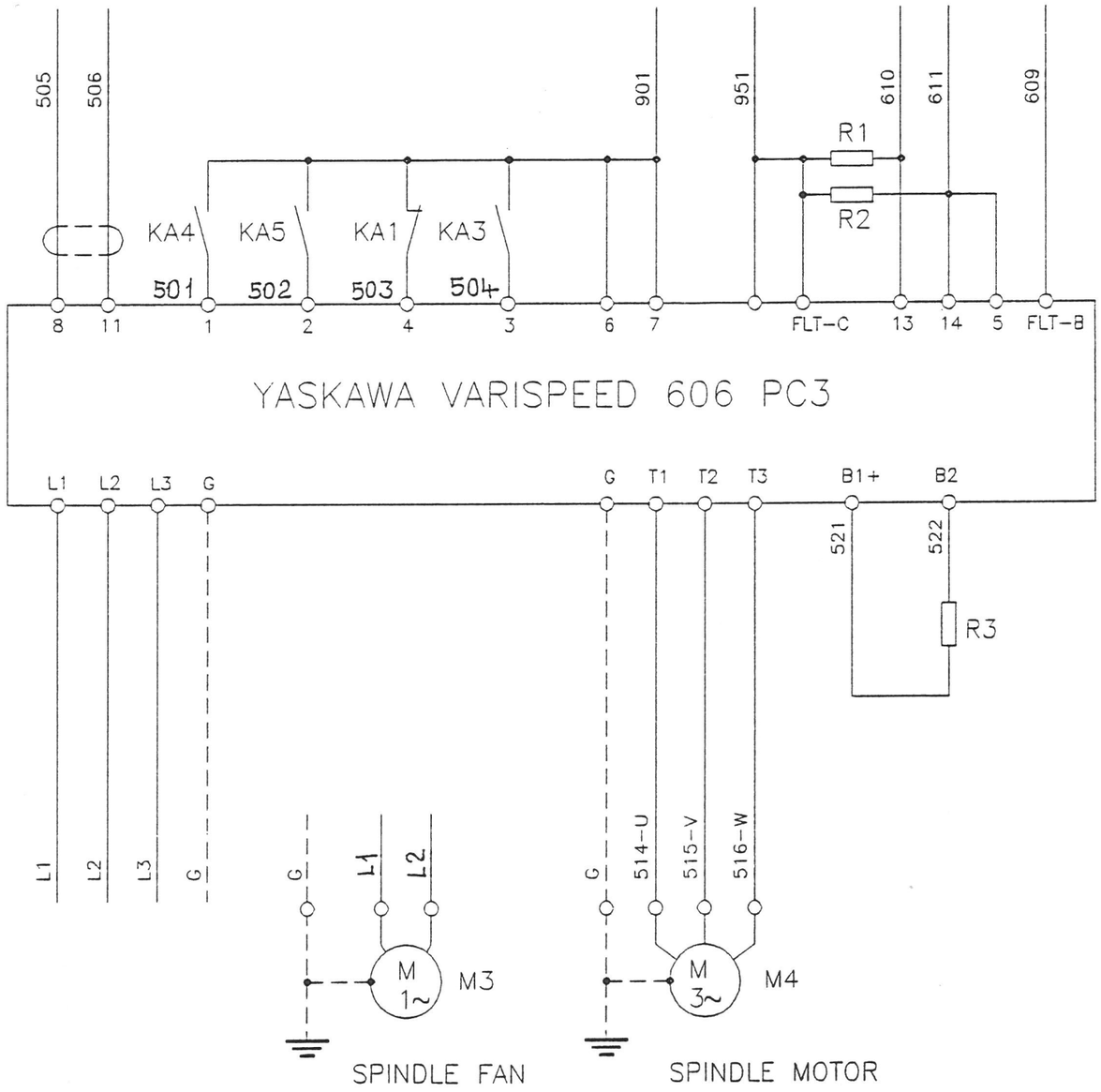

DIAGRAM # E4

J 350 65 7254 - 4 (01)

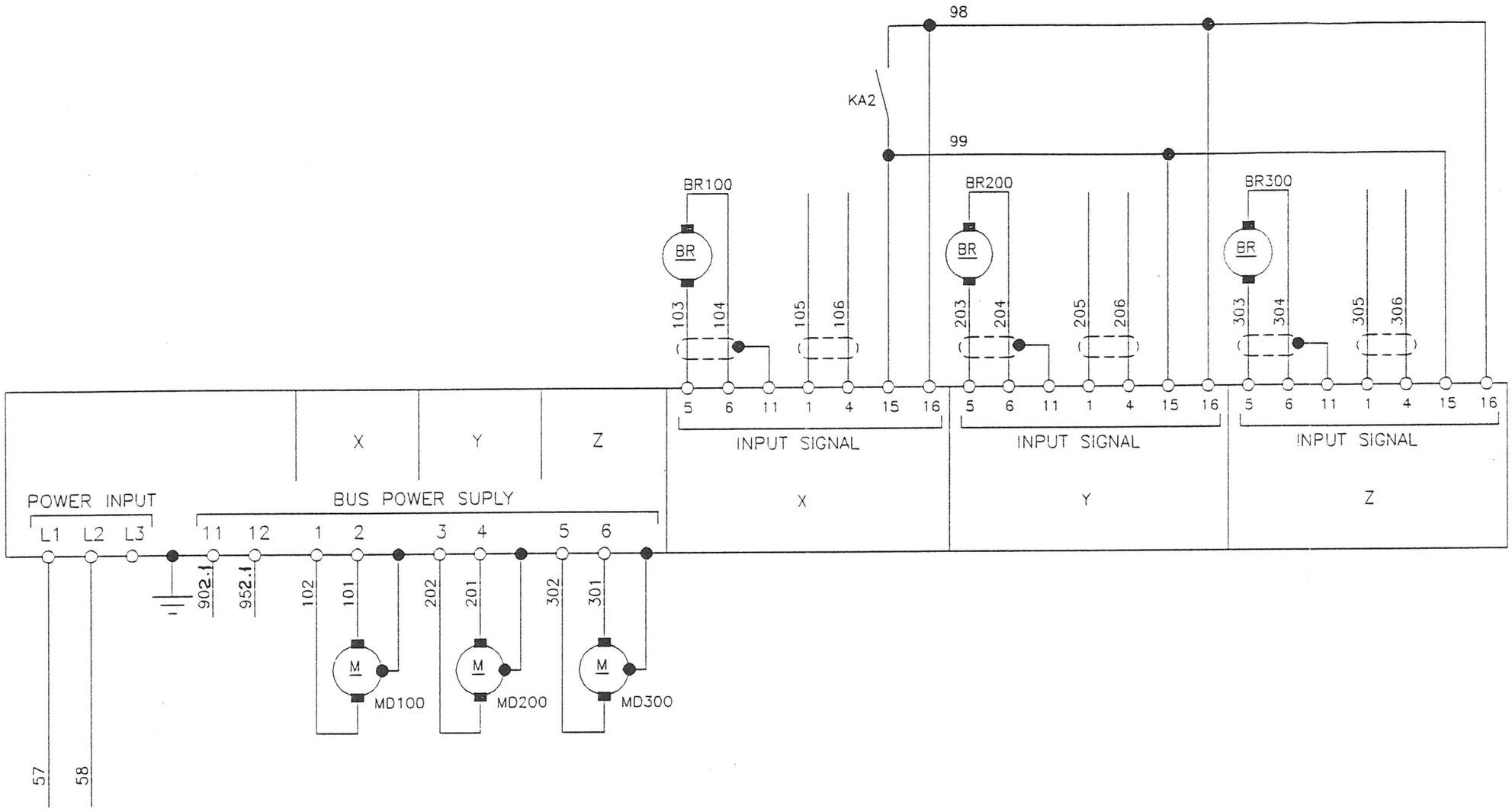

DIAGRAM #E 5

J 350 65 7254 - 5(01)

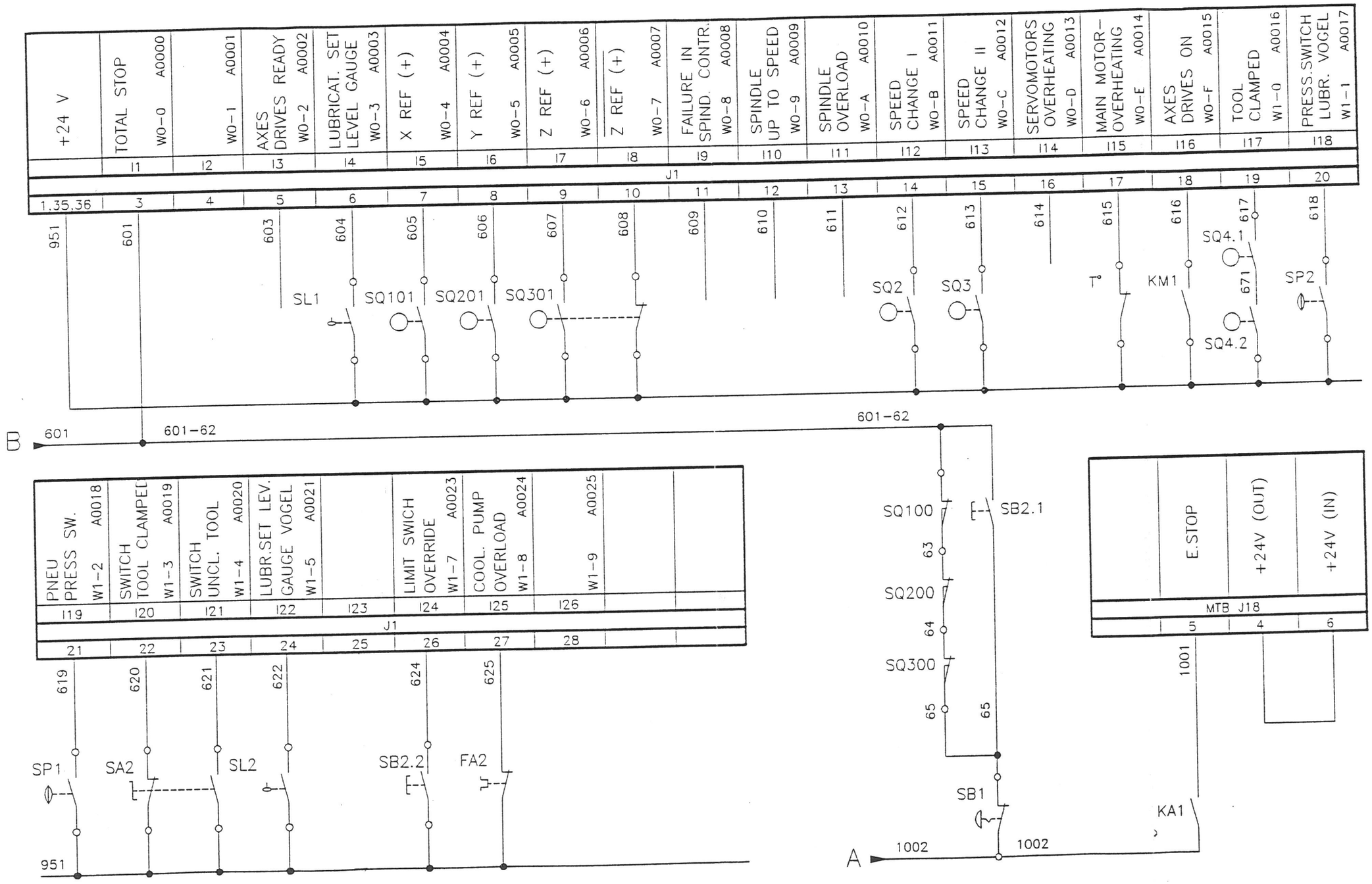

DIAGRAM # E 6

J 350 65 7254 - 6 (01)

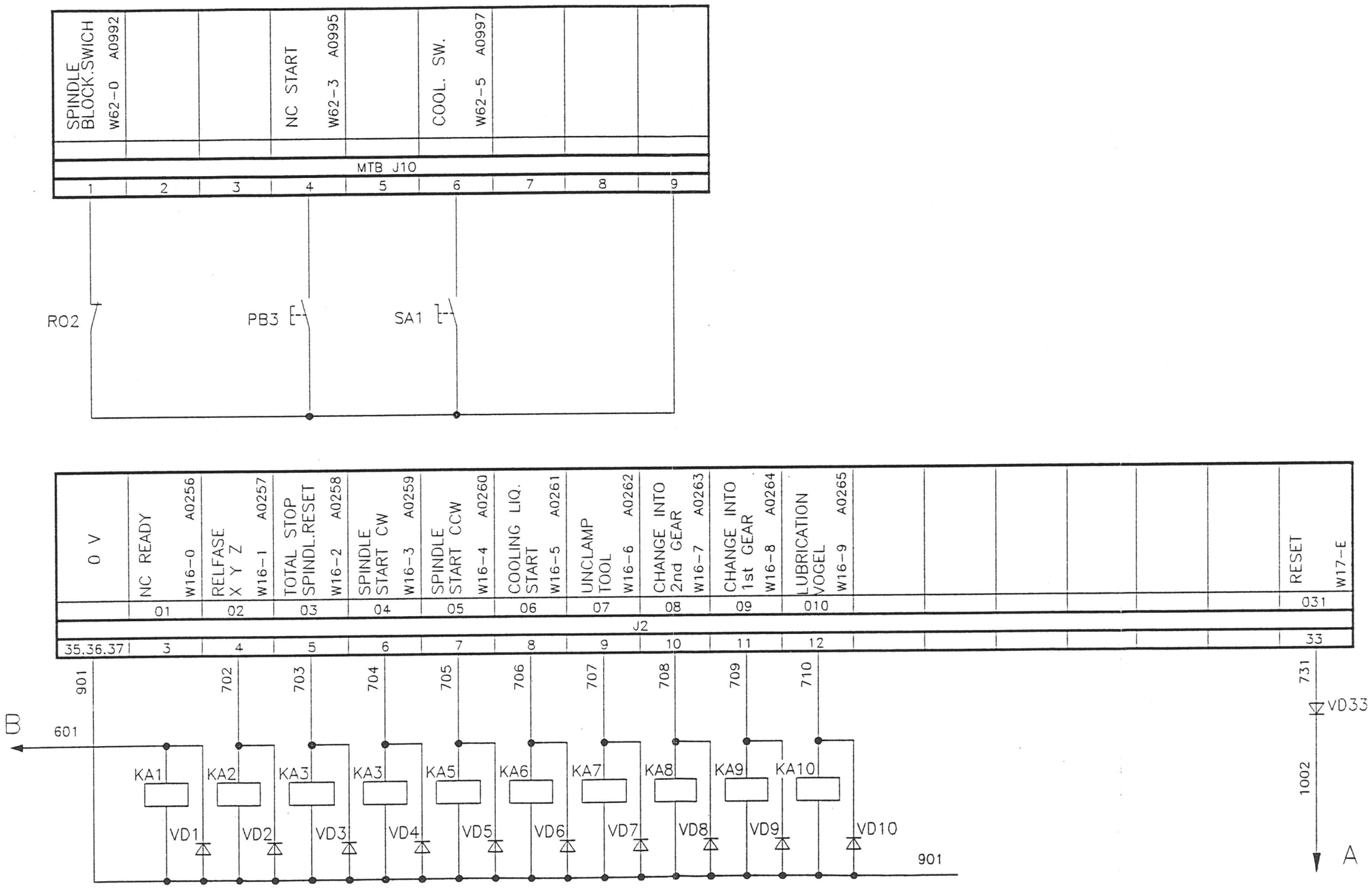

DIAGRAM # E 7

J 350 65 7254 - 7 (01)

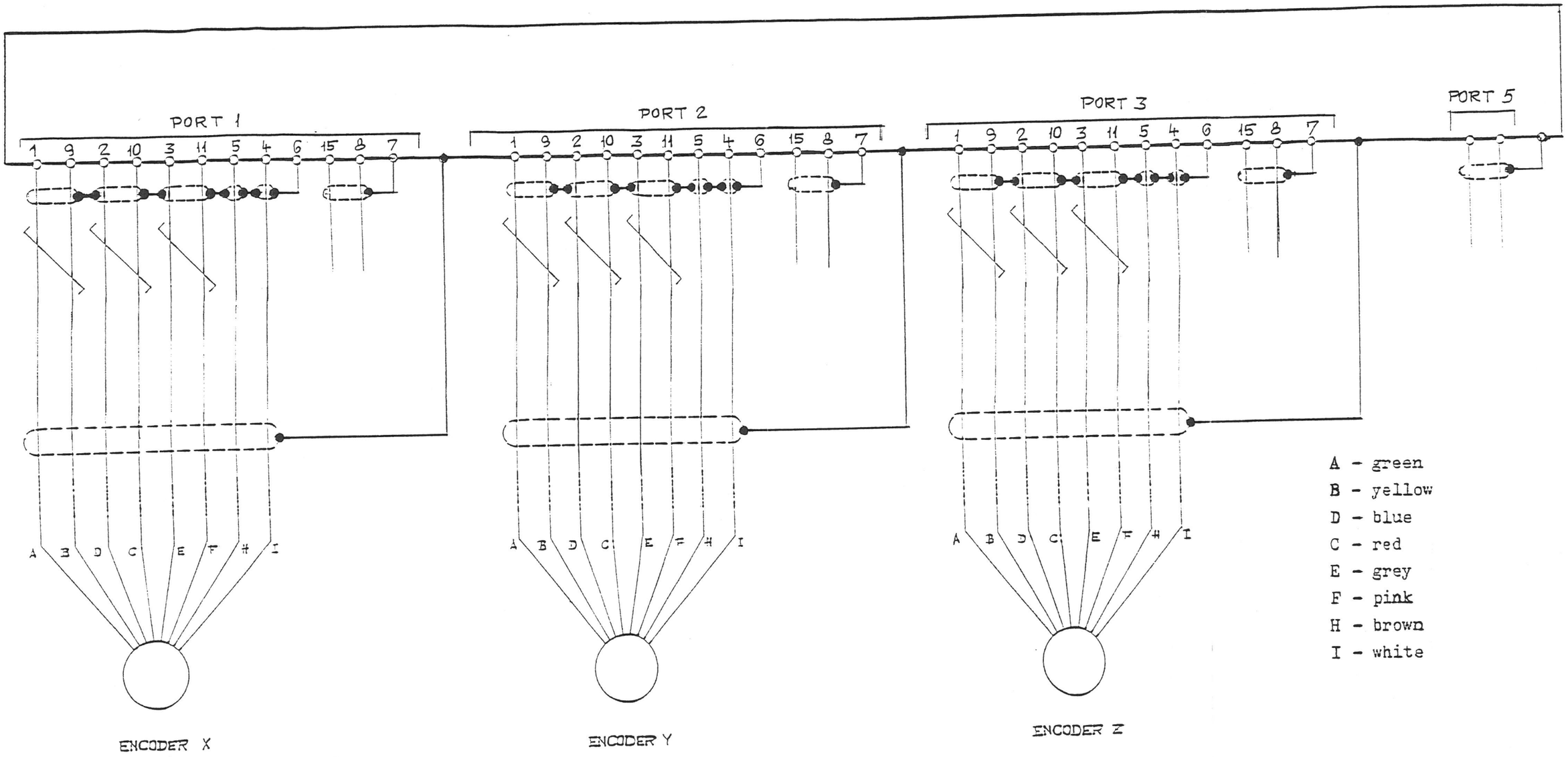

A - green
B - yellow
D - blue
C - red
E - grey
F - pink
H - brown
I - white

DIAGRAM # E 8

J 350 65 7254 - 8 (01)

SECTION IV. LUBRICATION

Preventive maintenance and lubrication are very important to your machine. Without lubrication it is only a matter of time before your machine malfunctions or shows signs of excessive wear before it should. If you perform timely and periodic lubrication checks, your machine will perform within specifications.

A. LUBRICANTS AND COOLANTS

Auto Vogel Reservoir	Mobil Vactra #2 or equivalent Fill lubrication reservoir as required.
F.R.L. Reservoir	Mobil DTE #21 or equivalent Velocite #6 Fill reservoir as required.
Knee Gibs	Mobil Vactra #2 or equivalent Fill oil cups daily.
Power Knee Unit (option)	Mobilith AW-2 or equivalent grease fitting once a week.
Spindle Spline	Mobilith AW-2 or equivalent Brush grease on spline bi-monthly.
Knee Elevating Screw	Mobilith AW-2 or equivalent Brush grease on screw bi-monthly.
X & Y & Z Axis Bearings	Kluber lubrication NBU 15
Flood Coolant	Rated for water solution coolant, not cutting oil.
Spindle Bearings	Kluber lubrication NBU 15
Two-speed gear box Bearings	Kluber lubrication NBU 15

DO NOT use trichlorethane or carbon tetrachloride.

NEVER run the flood coolant pump dry, coolant is used to lubricate flood pump.

B. PNEUMATIC DRAWBAR AND PNEUMATIC SPEED CHANGER

The J350 CNC is equipped with pneumatic drawbar and pneumatic speed changer. The pneumatic oiler and dryer are located to the left are to the column machine. The recommended operating air pressure is 80 PSI (see photo # 3,4).

On the regulator assembly, there is pressure switch. This is to keep the system inoperative in case of an air failure.

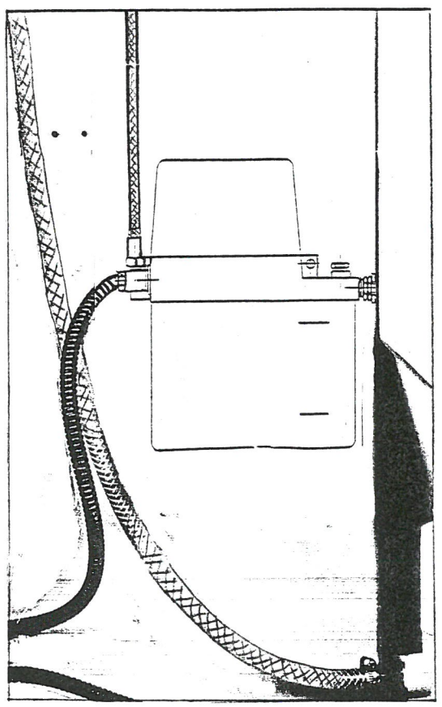

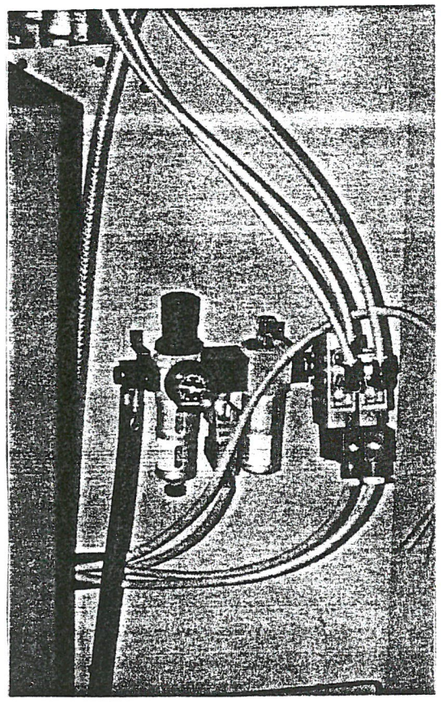

Pneumatic Oiler and Dryer
PHOTO # 3, 4

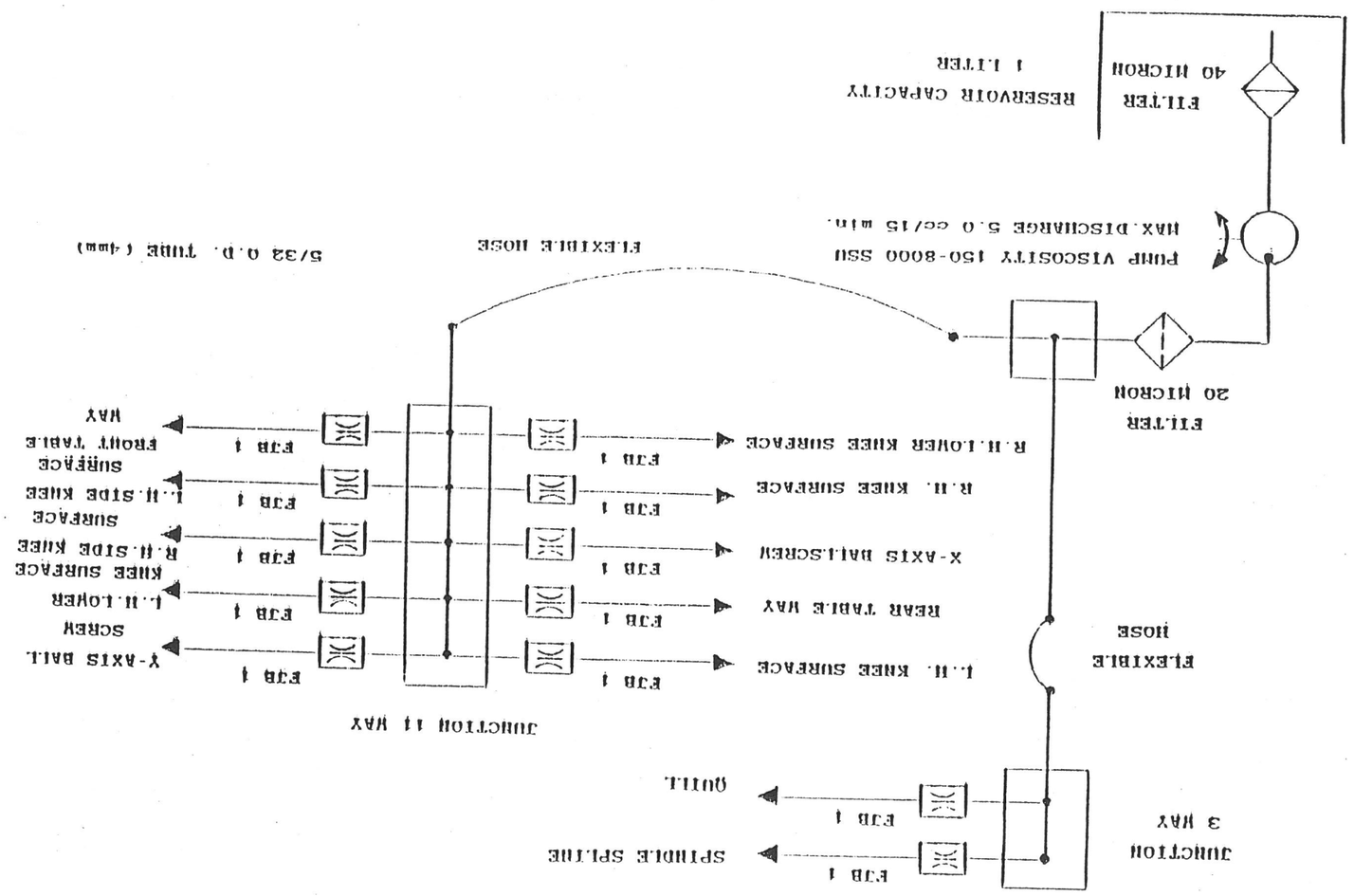

Lubrication Schematic
FIGURE # 11

J350

C. PNEUMATIC DIAGRAM

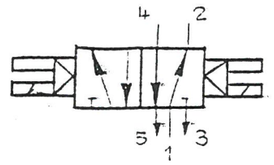

JMFH 5 - 1/8

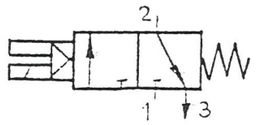

MFH 3 - 1/8

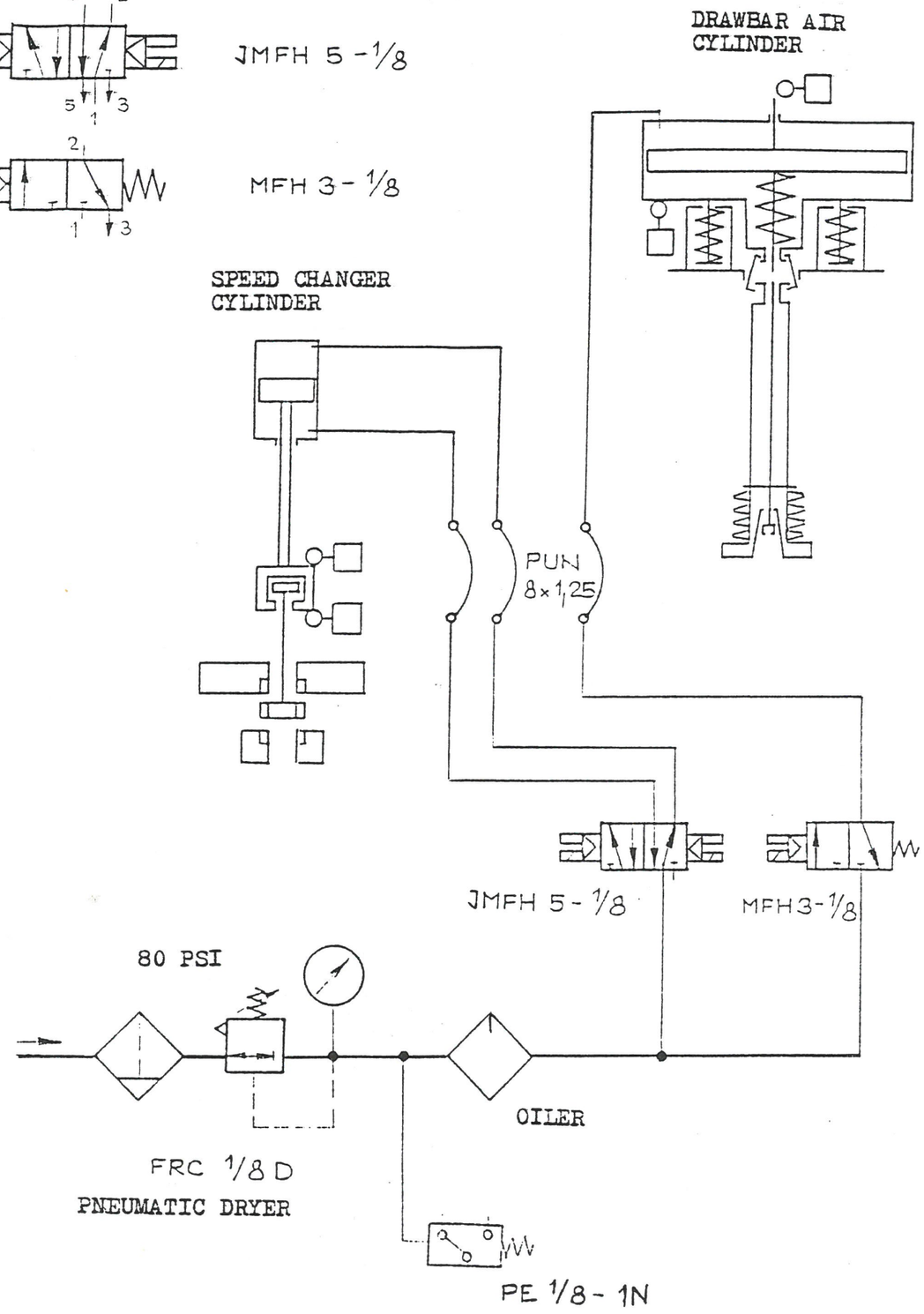

D. PNEUMATIC TOOL HOLDER

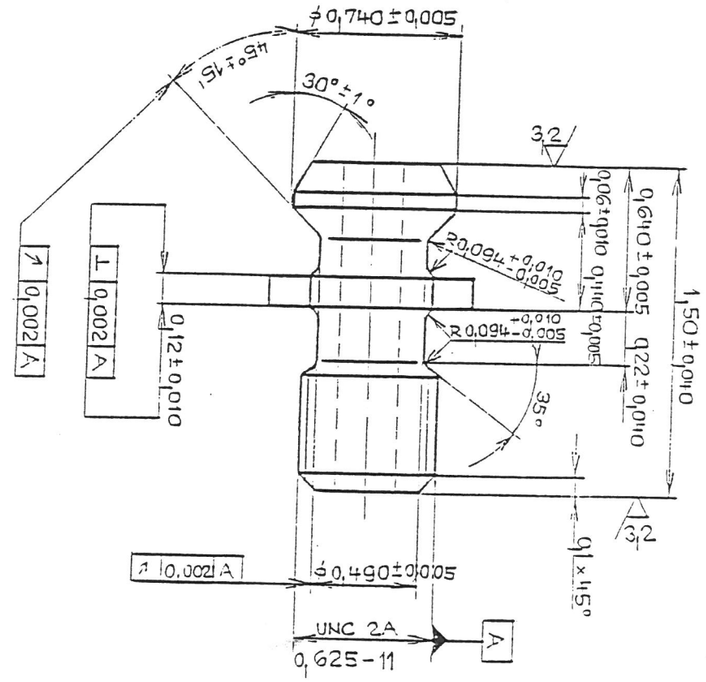

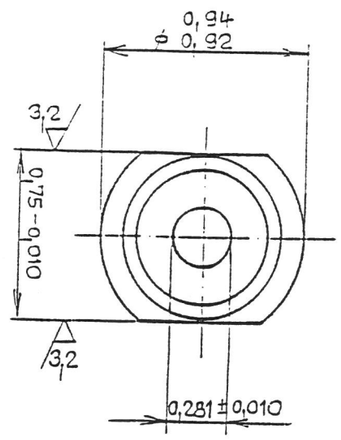

Section V. MECHANICAL

A. X - axis - Installation and Disassembly of the Timing Belt

1. Disassembly

   a. Disconnect machine power with the main machine switch and secure the switch off position.
   b. Remove the cover over the motor from the machine table.
   c. Release 8 scre ws on the belt cover and remove the belt cover.Check the belt tension for future assembly. Mark the position of motor and ball screw pulleys with regard to the knee for future assembly.
   d. Release 4 screws M10 from back of motor holder. Move the motor to the ball screw (see photo # 5) and remove the belt.

2. Installation.

   a. Replace the belt, push the motor from ball screw to get the same belt tension as in step c (see photo #5) and retighten 4 screws M10 on motor holder.
   b. Return the belt cover, retighten the screws and return the cover over the motor on machine table.

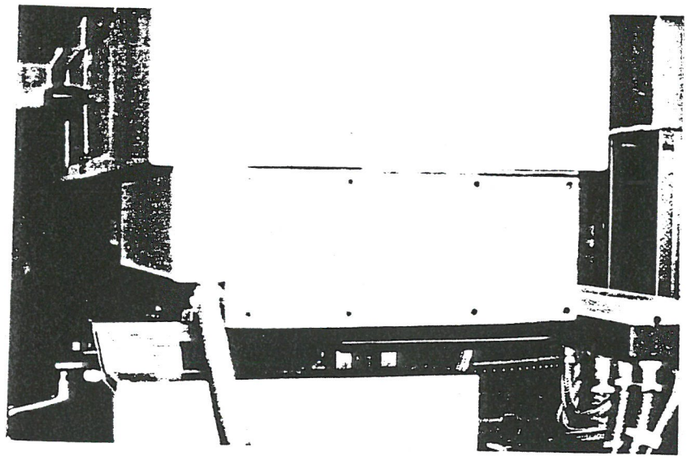

PHOTO # 5

B. X - axis - Installation and Disassembly of the Servo Motor

1. Disassembly

a. Disconnect machine power with the main machine switch and secure the switch off position.
b. Follow the procedure described in section A steps 1b to 1d.
c. Release and disconnect motor connectors (see photo #6).
d. Remove nuts from motor holder.
ATTENTION: Hold the motor by one hand to keep it from falling down during this operation.
e. Check and mark the motor pulley position in relationship to motor holder and remove the pulley from motor shaft.
f. Remove the motor holder from motor flange.

2. Installation.

a. Install the motor pulley on motor shaft into the position marked in step e.
b. Fix the motor on the motor holder and tighten the screws. The motor subassembly put on the motor bracket and fix slightly with the nuts.
c. Place the belt on pulleys, move the motor from ball screw to retighten the belt on the same tension as in step 1b and tighten the nuts with some preload.
d. Install the motor cover on the table.
e. Connect motor cables and connectors.
f. Return the belt cover.

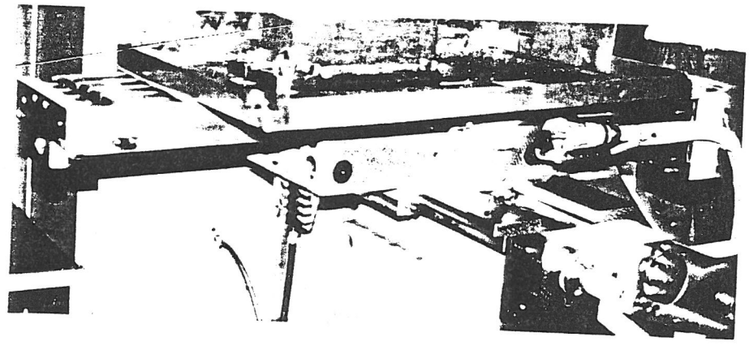

PHOTO #6

C. Y - axis - Installation and Disassembly of the Timing Belt

1. Disassembly

   a. Disconnect machine power with the main machine switch and secure the switch off position.
   b. Remove 8 screws from the Y axes belt cover (see photo #7) Check the belt tension for future assembly.Mark the position of motor and ball screw pulleys in relationship to the knee for future assembly.
   c. Remove motor cover.
   d. Release 4 nuts M10 from back of motor holder. Move the motor to the ball screw (see photo #7) and remove the belt.

2. Installation.

   a. Replace the belt, push the motor to the knee to get the same belt tension as in step b. (see photo #7) and retighten 4 nuts M10 on motor holder.
   b. Install the motor cover.
   c. Return the belt cover and retighten the screws.

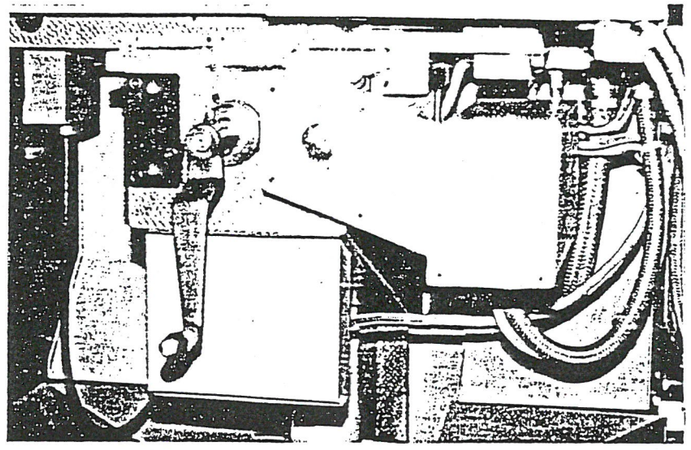

PHOTO #7

PHOTO #7

D. Y - axis - Installation and Disassembly of the Servo Motor

1. Disassembly

a. Disconnect machine power with the main machine switch and secure the switch off position.
b. Follow the procedure described in section C,steps 1b to 1d.
c. Release and disconnect motor connectors (see photo #8).
d. Remove nuts from motor holder.
<u>ATTENTION:</u>Hold the motor by one hand to keep it from falling down during this operation.
e. Check and mark the motor pulley position in relationship to motor holder and remove the pulley the from motor shaft.
f. Remove the motor holder from the motor flange.

2. Installation.

a. Install the motor pulley on motor shaft into the position marked in step e.
b. Install the motor on the motor holder and tighten the screws. The motor subassembly put on the motor bracket and fixed slightly with the nuts.
c. Place the belt on pulleys, move the motor to the knee to retighten the belt on the same tension as in step 1b and tighten the nuts with some preload.
d. Install the motor cover.
e. Connect motor cables and connectors.
f. Return the belt cover.

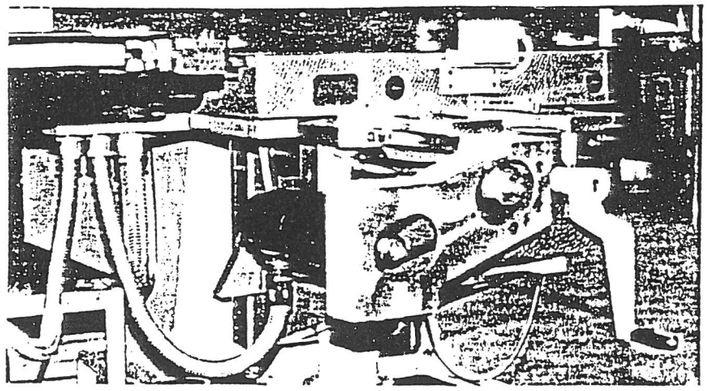

PHOTO #8

E. Z - axis - Installation and Disassembly of the Timing Belt

1. Disassembly

   a. Disconnect machine power with the main machine switch and secure the switch off position.
   b. Remove the front cover on headstock (see photo #9).
   c. Check the belt tension for future assembly.
   d. Mark the position of ball screw pulley with regard to the headstock body for future assembly.
   e. Release nuts on motor holder (see photo #10). Move the motor to the headstock.
   f. Push the belt on the ball screw pulley by fingers into the free space over the pulley through the small opening in the headstock body casting.Then loose the belt on motor pulley.

2. Installation.

   a. Replace the belt, push the motor from the headstock to get the same belt tension as in step c (see photo #10). Tighten four nuts on the motor holder.
   b. Reinstall the front headstock cover and tighten the screws.

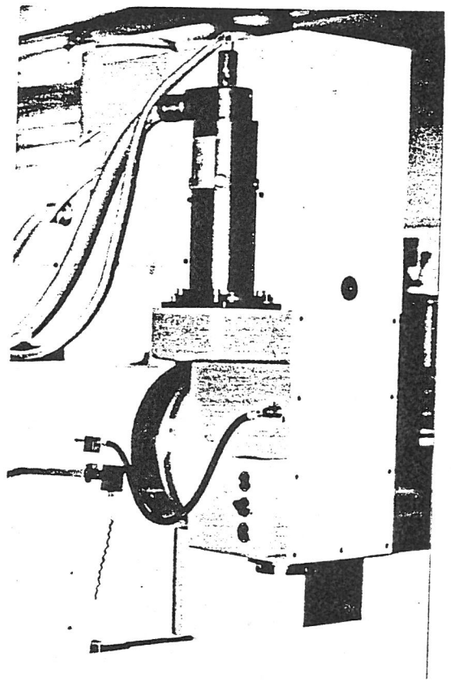

PHOTO #9

F. Z - axis - Installation and Disassembly of the Servo Motor

1. Disassembly

   a. Disconnect machine power with the main machine switch and secure the switch off position.
   b. Follow the procedure described in section E,steps1b to 1f.
   c. Release and disconnect motor connectors (see photo #9).
   d. Remove nuts from motor holder.Move the motor vertically out and put it aside.
   e. Check and mark the motor pulley position in relationship to the motor holder and remove the pulley from motor shaft.
   f. Remove the motor holder from the motor flange.

2. Installation.

   a. Install the motor pulley on motor shaft into the position marked in step e.
   b. Install the motor with pulley on the motor bracket and tighten the screws. The motor subassembly put on the bracket and fixed slightly with the nuts.
   c. Place the belt on pulleys in opposite way as described in section E step 1f.
   d. Move the motor from the headstock to retighten the belt on the same tension as in step 1b and tighten the nuts with some preload.
   e. Connect motor cables and connectors.
   f. Return the front headstock cover and retighten the screws.

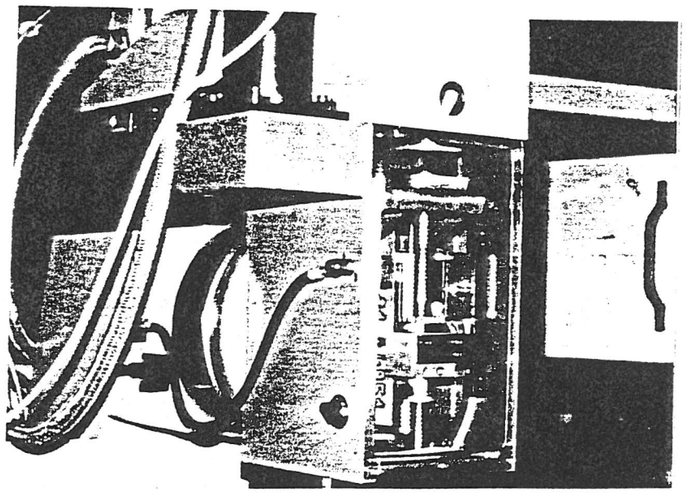

PHOTO #10

G. X - axis - Travel Limit Switches (Home and End)

1. Disassembly

   a. Disconnect machine power with the main machine switch and secure the switch off position.
   b. Remove the cover on the machine table.
   c. Remove the cover from the switches and dogs terminal box and disconnect the input cable (see photo #11).
   d. Measure and remark the distance of the front of dog - plate from the table body.(for quick replacement of the switches and dogs terminal box.). Remove the complete box by loosing 4 screws and 2 pins.

2. Installation.

   a. Replace the complete terminal box, fix with 2 screws and adjust the front of dog - plate to the position marked in step d. Tighten slightly the screws.
   b. Connect the input cable. Switch on the machine.
   c. Check the switches and dogs function by the slow jogging to the limit position in both directions of movement. The differences in new read-out position and the position before replacing the terminal box correct by fine adjusting of the complete terminal box.
      <u>ATTENTION:</u> Do not use the rapid traverse but only the minimal manual feed to check the switches function!
   d. Secure the terminal box position with the 2 rest screws, correct the pin holes with reamer and drive in the pins after the correct adjusting.
   e. Return the terminal box cover and the table cover.

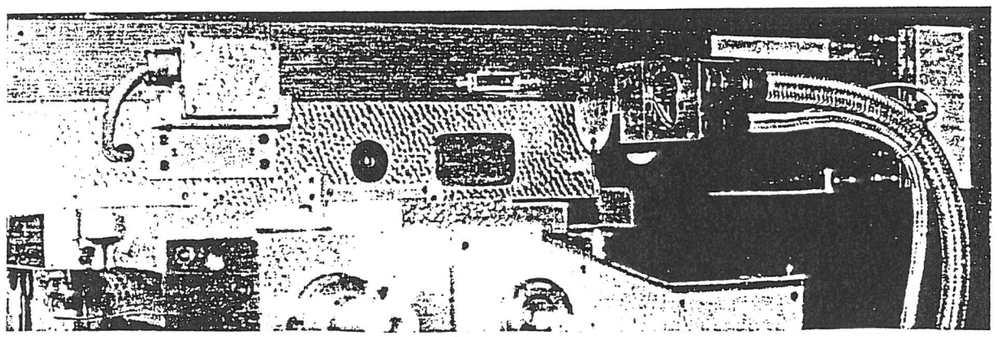

PHOTO #11

H. Y - axis - Travel Limit Switches (Home and End)

1. Disassembly

   a. Disconnect machine power with the main machine switch and secure the switch off position.
   b. Remove the cover from the switches and dogs terminal box and disconnect the input cable (see photo #12).
   c. Measure and remark the distance of the front of dog - plate from the knee body (for quick replacement the switches and dogs terminal box.). Remove the whole box by loosing 4 screws and 2 pins.

2. Installation.

   a. Replace the complete terminal box, fix with 2 screws and adjust the front of dog - plate to the position marked in step c. Tighten slightly the screws.
   b. Connect the input cable. Switch on the machine.
   c. Check the switches and dogs function by the slow jogging to the limit position in both directions of movement. The differences in new read-out position and the position before replacing the terminal box correct by fine adjusting of the complete terminal box.
      <u>ATTENTION:</u>Do not use the rapid traverse but only the minimal manual feed to check the switches function!
   d. Secure the terminal box position with the 2 rest screws, correct the pin holes with reamer and drive in the pins after the correct adjusting.
   e. Return the terminal box cover .

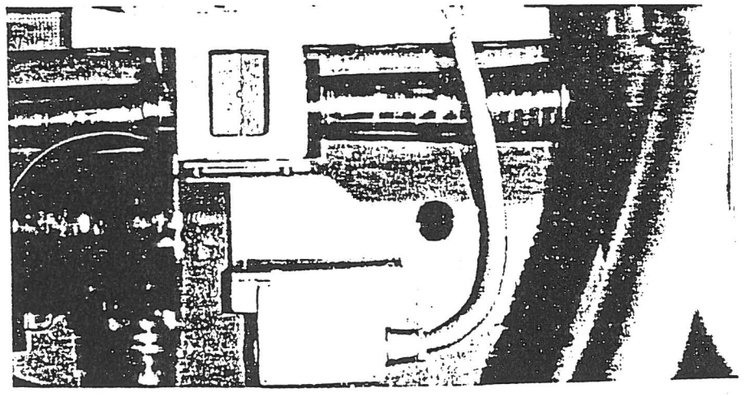

PHOTO # 12

I. Z - axis - Travel Limit Switches (Home and End)

1. Disassembly

   a. Disconnect machine power with the main machine switch and secure the switch off position.
   b. Remove the front headstock cover. (See photo #10)
   c. Remove the holder of the fixed dogs.
   d. Remove the holder of two micro switches, measure and remark the distance among the switches pulley and front face of the holder. Disconnect the micro switches input cables. Remove the wrong micro switch.

2. Installation.

   a. Install the new micro switch and adjust the micro switch pulley to the marked position from front face of holder.
   b. Connect the input cables. Mount the holder to the headstock body.
   c. Install the fix dogs holder. Switch on the machine.
   d. Check the switches and dogs function by the careful jogging of the quill to the limit position on fixed dogs. Check the switch - off positions in both directions of movement. The differences in new read-out position and the position before replacement correct by fine adjusting of fixed dogs. <u>ATTENTION:</u> Do not use the rapid traverse but only the minimal manual feed to check the fixed dogs function!
   e. Secure the fixed dogs position with the 2 screws after adjusting.
   f. Return the front headstock cover.

J. HEADSTOCK - Spindle Motor Belts. Removal and Installation.

1. Removal

   a. Disconnect machine power with the main machine switch and secure the switch off position.
   b. Remove the cover of the headstock.
   c. Release the belt tightening pulley (see photo #13).
   d. Release the belt tightening pulley holder fixed by two nuts M10.
   e. Remove the tightener from belt tightening pulley. The whole subassembly is loosen from holder and can be pulled out and put aside.
   f. Loosen the main spindle motor, which is fixed by four nuts M10 and simultaneously release two tightening screws M8. Move the motor to the spindle.
   g. It is possible to loosen two belts after this operation - the wide and slim one.
   h. The removal of the belt between spindle and intermediate gear shaft.It is necessary to remove the air cylinder for clamping (unclamping) tools.
   i. Disconnect the input of air to the tool unclamping air cylinder and the micro switches.
   j. Loosen four allen screws M6 on bracket of the unclamping air cylinder.
   k. Remove the complete unclamping cylinder from the spindle.
   l. Loosen the lubrication input from the back of spindle, drive out the pins and loosen four allen screws M6. Then move the cover up.

m. Loosen the piston and move it up together with case. The way to the spindle pulley is free by this way.
n. Loosen four nuts M10 and two tightening bolts and move the brackets of the intermediate gear shaft to the spindle.
o. Disconnect the micro switches from gear changing cylinder.
p. Disconnect the air input to gear changing cylinder.
r. Remove the belt between spindle and intermediate gear shaft.

<u>ATTENTION:</u>The belt between spindle and intermediate gear shaft. must be tighten first before the belts between intermediate gear shaft. and main motor are tighten.

2. Installation.

a. Install the belt between spindle and intermediate gear shaft.
b. Connect the air input to gear changing cylinder.
c. Connect the micro switches of gear changing cylinder.
d. Move the bracket of the intermediate gear shaft of gear change in direction from spindle. Tighten slightly the nuts M10. Then adjust the belt tension with the tightening bolts and tighten the nuts definitely.
e. Install the piston with the case down into the spindle and reinstall the cover.
f. Fix the cover with four allen screws M6 and drive in the pins. Adjust the lubrication input on the spindle.
g. Put the complete tool unclamping cylinder into the spindle.
h. Screw the unclamping cylinder bracket with four allen screws M6.
i. Connect micro switches.
j. Connect the unclamping tool cylinder air input
k. Install two drive belts.
l. Move the main motor from spindle, fix slightly with M10 nuts and adjust with tightening bolts M8.
m. Install the tightening pulley holder, secure with two nuts M10 and install the tightener.
n. Adjust the tightening pulley and the correct belts tension.
o. Install the headstock cover.

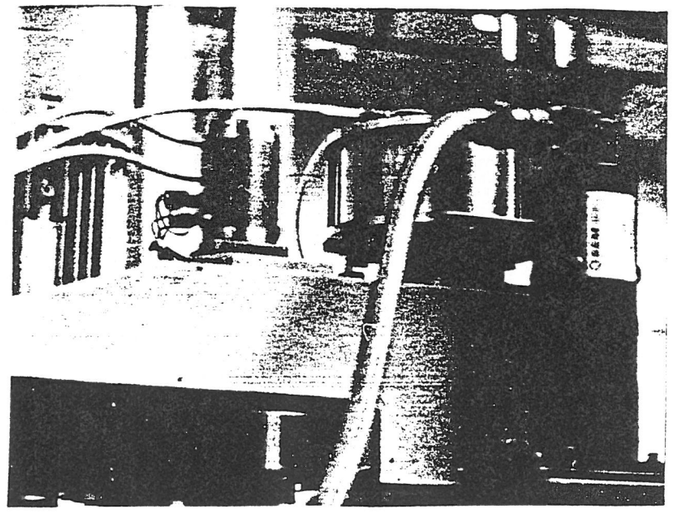

PHOTO # 13

K. HEADSTOCK - Spindle Motor Removal and Installation.

1. Removal

   a. Disconnect machine power with the main machine switch and secure the switch off position.
   b. Remove the cover of the headstock.
   c. Remove the cover of electrical junction box, disconnect motor power cable. Loosen the motor mounting plate and the Tightening screws.
   d. Loosen the belt tightening pulley (see photo #14), remove the pulley tightener plate and remove the belts.
   e. Release the pulley secure lock (one allen screw M10) and remove the pulley.
   f. Release four screws M8 securing the main spindle motor and by pulling up remove the motor.

2. Installation.

   a. Reinstall the motor with four screw M8.
   b. Install the motor pulley and spacer and lock by screw M10.
   c. Install the mounting plate of the tightening pulley and the belts. Adjust the tension of the belt of the 1st gear with two tightening bolts and the tension of the 2 nd gear with tightening pulley.
   d. Fix the motor mounting plate with four screws.
   e. Connect the motor input cable to the electrical junction box and install the box cover.
   f. Install the headstock cover.

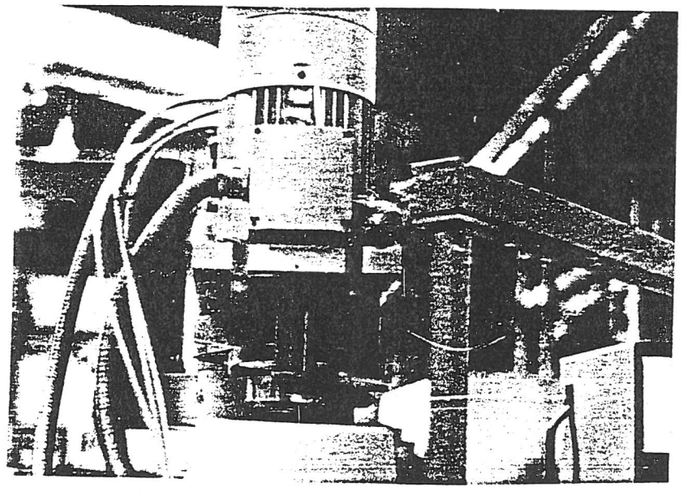

PHOTO # 14

L. HEADSTOCK - Quill Removal and Installation.

1. Removal

   a. Disconnect machine power with the main machine switch and secure the switch off position.
   b. Remove the cover of the headstock,release the Z axes servo drive.
   c. Disconnect and remove the Z axes servo drive and put aside.
   d. Remove the timing belt (see photo #15).
   e. Remove the Z axes travel limit fixed dogs holder
   f. Disconnect and removed the Z axes micro switches holder.
   g. Release the ball screw pulley nut by loosing the allen screw M5 through the opening on the front face of headstock. Remove the nut and put aside. Move out the timing pulley.
   h. Remove the upper and lower ball screw bearing flange. Remove the bottom supporting ball screw bearing flange.Move the quill into bottom position. Move out the pulley with the flange.
   i. With the manual movement of knee set up the lower machine table position. Secure the quill on the table with suitable support.
   j. Loosen the ball screw nut.
   k. Screw out the ball screw into the upper possible position not to disturb disassembling of the ball screw nut holder. <u>ATTENTION:</u> The ball screw must not be screw out from the ball screw nut.
   l. Remove the ball screw nut holder.
   m. Move out the ball screw with the holder from the headstock body.
   n. Screw out the flange with the quill wiper ring on the bottom of headstock (four allen screws M5).
   o. Carefully move out the quill from the headstock body. The quill is moved out together with the flange and wiper ring.

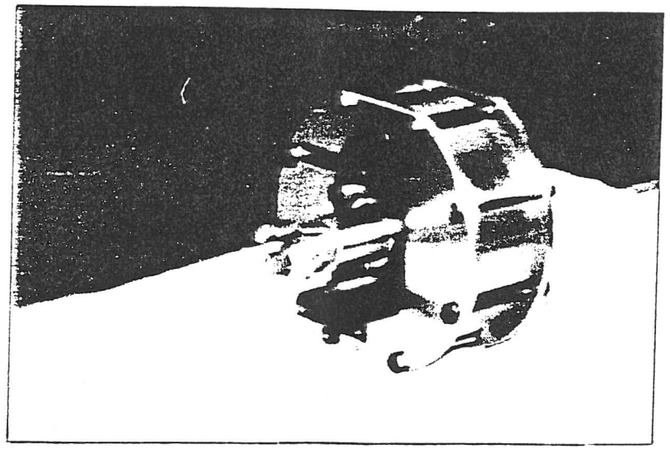

PHOTO # 15

2. Installation

a. Carefully move the quill into the headstock body (the quill stays in the bottom position supported on the table with suitable wooden support).
b. Move the ball screw with the nut into the ball screw nut holder and put it into the headstock body.
c. Install the ball screw nut holder on the quill body.
d. Screw out the ball screw into the upper possible position.
e. Install the lower ball screw bearings flange. Then fix also the upper ball screw bearings flange.
f. Move the quill into the upper position.
g. With the help of four allen screws M5 install the supporting bearing with the flange into the headstock body.
h. Put the timing pulley on the ball screw nut.
i. Screw in the timing pulley nut and after the nut was pre-loaded lock the nut with the screw M5 through the opening of the headstock body .
j. Install the micro switches holder and connect the wires.
k. Install the Z axes fix dogs holder.
l. Install the timing belt on the pulley and stretch it into the servo drive space.
m. Install the servo drive on the holder and set up the tension of the timing belt (see section E step 2.a).
n. Connect the servo drive power cable.
o. Install the front cover on the headstock and fix with the screws.

M. HEADSTOCK - Gear Change Cylinder Removal and Installation. Seal Change.

1. Removal

a. Disconnect machine power with the main machine switch and secure the switch off position.
b. Remove the cover of the pneumatic spindle gear change(three screws M5x8 with screwdriver heads).
c. Disconnect the micro switches and two pneumatics piping tubes by the releasing FESTO clasps.
d. Remove the cylinder by the releasing of four allen screws M6 (see photo #16).

<u>ATTENTION:</u> Remove the cover on the side of the cylinder through which is possible to see the piston with the gear changing bar for better disassembly. Move the cylinder up than with radial movement release the cylinder from the lock and with the vertical movement up dismount the cylinder subassembly .

e. Remove the cover of the cylinder by releasing of four screws M6.Unlock the secure spacer (MB 0) and loosen the nut (KM 0). Pull out the piston.
f. Remove the seals on the piston eventually the seals on the piston bar.

2. Installation
   a. Install the seals on the piston eventually the seals on the piston bar.
   b. Put the piston bar into the cylinder then install the piston and spacer and fix with nut (KM 0). Lock the nut with spacer.
   c. Install the cover.
   d. Install the cylinder and gear change bar according the step 1d.
   e. Screw on the cylinder on the bracket of the intermediate gear shaft.
   f. Drive in the side cover of the cylinder.
   g. Connect the micro switches and two pneumatics piping tubes by the locking FESTO clasps.
   h. Install the cover of the pneumatic spindle gear change.

N. HEADSTOCK - Tools Unclamping Cylinder Removal and Installation. Seal Change.

1. Removal
   a. Disconnect machine power with the main machine switch and secure the switch off position.
   b. Remove the enclosures.
   c. Disconnect the micro switches and pneumatics piping tube (see photo #16).
   d. Loosen four allen screws M6 on the tool unclamping cylinder bracket .
   e. Move the complete unclamping cylinder up from the spindle.
   f. Screw out 8 screws M10 connecting two cylinder covers.The cylinder can be completely dismounted after screw removing.
   g. Remove the seals on the piston.
2. Installation
   a. Install the new seals on the piston.
   b. Put the piston into the cylinder than install the cover and screw the cylinder together with eight screws M10.
   c. Move the complete cylinder into the spindle.
   d. Screw in four allen screws M6 on the bracket of tool unclamping cylinder.
   e. Connect the micro switches and pneumatics piping tube.
   f. Install the enclosure.

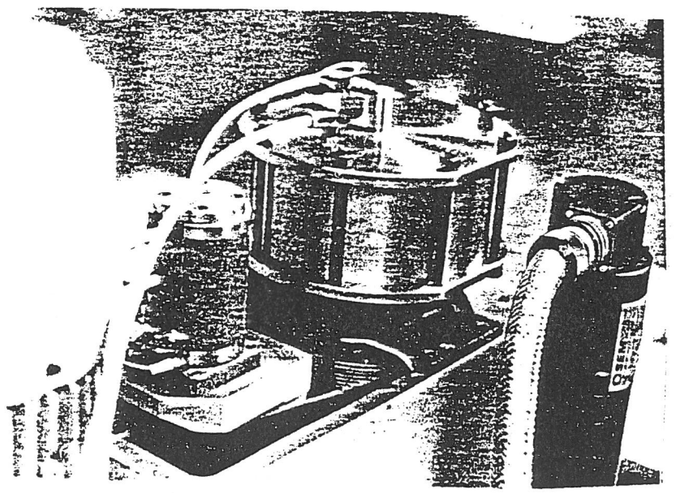

PHOTO # 16

O. HEADSTOCK - Removal and Installation of Headstock on the Column.

1. Removal

a. Disconnect machine power with the main machine switch and secure the switch off position.
b. Disconnect the main spindle motor power cable from the junction box.
c. Disconnect pneumatics piping tubes and cables from the tool unclamping cylinder and spindle speed change gear box (section M step 1c and section N step 1c).
d. Set up the headstock into the zero position on the scale Fix the headstock with the rope and connect to the crane.
e. Loosen four nuts M16 backward on the circular flange of the column.
f. Pull out the body of the headstock moving carefully in direction from column.
<u>ATTENTION:</u> The headstock must be secure on the crane during this operation.

2. Installation

a. Hang the headstock on the crane (quill in vertical position).
b. Four screws M16 move into the T-slot and carefully move the headstock on the circular clamping part of column.
<u>ATTENTION:</u> Follow carefully the movement of the gears into the worm shaft in the column body.
c. Screw in four nuts M16 with four spacers 17.
d. Connect pneumatics piping tubes and electrical cables for unclamping tools - section M step 2g and section N step 2e.

P. SPINDLE - Spindle Bearings Removal and Installation.

1. Removal

a. Remove the front quill flange (eight allen screws M6.)
b. Move the spindle from quill body by axial movement.
c. Remove bearing retaining ring and the radial bearing 6009 P6 with two sealing and slinger rings. Remove the retaining ring at the bearing.
d. Use the press to compress the wave ring springs at the place of supporting ring far enough to allow the cross key to be removed from the drawing bar.
e. Put aside the wave ring springs.
f. Remove the retaining ring under wave ring springs.
g. Release the secure screw M5 from the nut fixing the bearings and remove the nut.
h. Remove 3 angular contact ball bearings.

2. Installation

a. Install the clamping flange of the quill.
b. Fill the new bearings with grease KLIEBER NBU15 in quantity according to the description.
c. Install the 3 bearings in order according to the description, fix them with the nut and lock with allen screw M5.

d. Install the retaining ring and the spacer under the wave ring springs
e. Install the twins of wave ring springs. The springs should be treated by grease with anti sticking components. Put the supporting ring on the springs.
f. Install the drawing bar into the spindle.
g. Compress the wave spring rings on the spindle under the press, install the cross key across the tool drawing bar. The key should fit into the groove of the supporting ring.
h. Install the retaining ring under the bearing 6009 P6 and then set up the bearing.
i. Install two sealing and slinger rings and secure with retaining ring.
j. Install the spindle into the quill.
   ATTENTION: The whole spindle and bearings subassembly must be moved into the quill with light press produced only by hand.
k. Screw in the clamping flange of the quill (eight allen screws M5).
l. Execute the first run in cycle of spindle bearings. This cycle takes approximately 2 hours. It starts with min. 500 rpm running for 5-10 min. If the temperature keep after some time constant (not grow up) the number of revolution can be make higher for some 500 rpm. If the temperature grew up stop the cycle and after cooling start with number of revolution, where the temperature stays constant. This way continue to the maximum number of spindle revolution.
   ATTENTION: The complete change of bearings is possible directly on the machine, without removal of quill from the headstock. It is necessary to set up the lowest possible position of the table and continue according steps 1b to 1h. The job is easier and quicker when you remove the unclamping cylinder according section N steps 1a to 1e.

   Assembly should be done according steps 2a - 2l. The first run in of the spindle bearings should be done directly on the machine. Install the unclamping cylinder according section N steps 2c - 2f.

R. SPINDLE - Removal and Installation of tool clamping device.

1. Removal

   a. Disconnect machine power with the main machine switch and secure the switch off position.
   b. Follow the procedure described in section P steps 1a - 1d

2. Installation

   a. Follow the procedure described in section P steps 2e - 2k in assembly operations.

   ATTENTION: All operations connected with change of spindle bearings in section P and R must be done under very clean conditions.

S. X - axis - Installation and Disassembly of Ball Screw

1. Disassembly

a. Disconnect machine power with the main machine switch and secure the switch off position.
b. Remove the cover over the servo drive from the machine table.
c. Release 8 screws on the belt cover and remove the belt cover. Check the belt tension for future assembly.
d. Release 4 screws M10 from back of motor holder. Move the motor to the ball screw (see photo #17).
e. Remove the timing belt.
f. Remove the nuts from the servo drive holder and put the servo drive with connecting cables on the floor and cover it.
g. Screw out the lock nut of the ball screw timing pulley and remove the pulley. (see photo #8).
h. Drive out the cap with internal thread with the help of hammer.
i. Remove the right ball screw holder by axial movement after loosing 4 screws M10.
j. Remove the cover on the left table side (two allen screws M10) .
k. Remove the left holder of the supporting ball screw bearing (4 allen screws M10 and 2 pins) . Remove the holder with axial movement.
l. Remove the table gib.
<u>ATTENTION:</u> The gib is secured in cross direction by the screw with brass spacer.
m. Remove the dog on the right side of the table.
n. Remove the table by the movement to the left. The table put aside.
o. Disconnect the ball screw nut lubrication tube.
p. Ball screw nut is fixed with 6 screws M6 to the cross support bracket.
r. Remove the complete ball screw by axial movement.

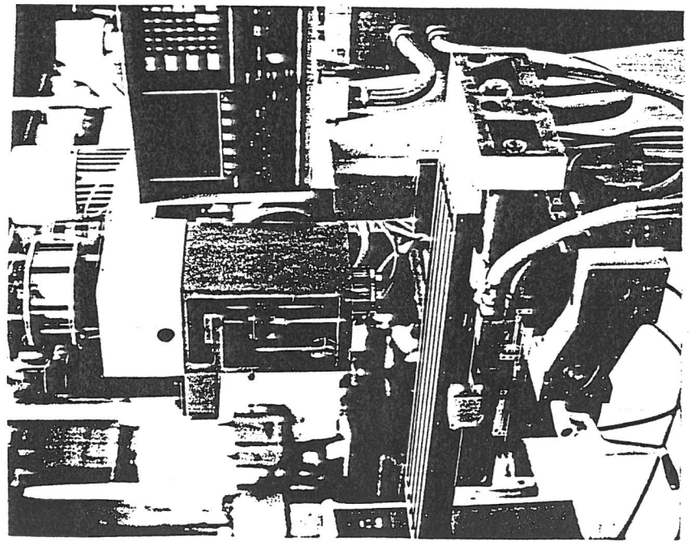

PHOTO # 17

2. Installation.

a. Move the new ball screw with the nut into the cross support bracket. The ball screw must be cleaned from conservation means.
b. Fix the ball screw nut with six screws M6.
c. Connect the ball screw nut lubrication tube.
d. Oil the guide ways and reinstall the table by the movement from left to the right.
e. Install the table gib and the setting up screw and lock this screw by cross screw with brass spacer.
f. Install the dog on the right table side.
g. Install the left holder of the supporting ball screw bearing (follow the step 1k).
h. Install the left bracket cover (2 allen screws M10).
i. Install the right ball screw bearing holder and fix with 4 allen screws M10.
j. Install the pulley, tight the pulley locking nut and lock with screw M5
k. Install the servo drive and lightly fix with four nuts M10.
l. Install the belt on timing pulleys.
m. Move the servo drive from ball screw to retighten the belt on the same tension as in step 1c. Tighten the nuts M10.
n. Return the belt cover, tighten the screws.
o. Install the motor cover on table.
p. Set up the X axes according the section G.

T. Y - axis - Installation and Disassembly of Ball Screw

1. Disassembly

a. Disconnect machine power with the main machine switch and secure the switch off position.
b. Release 8 screws on the belt cover.(see photo #18).Check the belt tension for future assembly.
c. Release 4 nuts M10 from back of motor holder. Move the motor to the ball screw (see photo #18).
d. Remove the timing belt.
e. Remove the servo drive put on the floor and cover it.
f. Remove the timing pulley.
g. Remove the auger of telescopic cover to the left and secure against loosing with wire.
h. Disconnect the ball screw nut lubrication tube.
i. Remove six allen screws M10 , keeping ball screw nut and flange of telescopic cover.
j. Remove the whole complete with the ball screw..
k. The ball screw bracket should be disassembled from the ball screw outside of the machine after removing the bearings covers (six allen screws M6). Move the ball screw out of bracket.

2. Installation.

a. Put the telescopic cover flange on the ball screw .
b. Put the ball screw into the bracket,complete with greased bearings and put into the knee body.
c. Install the bearings cover (with six allen screws M6).
d. Install the whole ball screw subassembly into ball screw nut holder.
e. Tighten the servo drive bracket to the machine knee. (four allen screws M10 and two cone pins.)
f. Tighten the ball screw nut to the telescopic cover flange (six allen screws M6)
g. Connect the ball screw lubrication tube.
h. Release the auger of the telescopic cover and put on the flange.
i. Install the pulley, tight the pulley locking nut and lock with screw M5
j. Install the servo drive and slightly fix with four nuts M10.
k. Install the belt on timing pulleys.
l. Move the servo drive from knee to retighten the belt on the same tension as in step 1b. Tighten the nuts M10.
m. Return the belt cover, tighten the screws.
n. Set up the Y axes according the section H

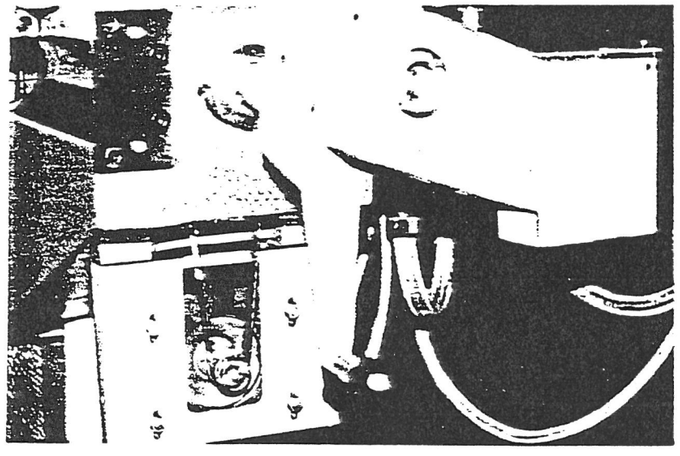

PHOTO # 18

U. Z - axis - Installation and Disassembly of Ball Screw

1. Disassembly
   a. Disconnect machine power with the main machine switch and secure the switch off position.
   b. Follow the procedure described in section L steps 1a-1m.

2. Installation.
   a. Follow the procedure described in section L steps 2b-2o.

J 350 CNC SPARE PARTS

PART 3

MECHANICAL DIAGRAMS AND PART DESCRIPTIONS

08 (MACHINE # 9-35-95 - 1061 : 1068) 95-08

1.05 TABLES DIAGRAM # 1.02

ITEM#	NAME	DRAWING/STAND.	DIMENSION	PCS
001	LONGITUDINAL TABLE "M"	1 11 01 0491.03		1
002	ACROSS TABLE	1 11 01 0487.05		1
003	COVER LEFT	2 11 03 0529.02		1
004	BODY NC NUT "Y"	1 11 03 0576.02		1
005	BEARING LEFT	2 11 03 0559.02		1
006	HOLDER	3 11 07 1758		1
007	GIB HOLDER	3 11 34 3601.01		1
008	BOTTOM GIB	3 11 34 3489.01		1
009	BOTTOM GIB LH&RH	3 11 34 3490.01		2
010	SIDE GIB X-AXIS	2 11 34 3491.02		1
013	CAP	4 11 53 5228		1
014	SHET-METAL	3 11 53 5229		1
015	SHET-METAL	3 11 53 5230		1
016	CAP	3 11 53 5607		1
017	SEAL	3 11 58 0984		1
018	ARRANGE WIPERS	4 11 67 1059		2
019	ARRANGE WIPERS	4 11 67 1060		1
020	ARRANGE WIPERS	4 11 67 1061		2
021	ARRANGE WIPERS	4 11 67 1062		1
022	ARRANGE WIPERS	4 11 67 1063		1
023	ARRANGE WIPERS	4 11 67 1064		2
024	ARRANGE WIPERS	4 11 67 1065		1
025	ARRANGE WIPERS	4 11 67 1070		1
026	ARRANGE WIPERS	4 11 67 1066		1
027	ARRANGE WIPERS	4 11 67 1067		1
028	ARRANGE WIPERS	4 11 67 1068		1
029	HHCS	ČSN 02 1103.2	M10x30	2
030	BHCS	ČSN 02 1131.2	M5x10	4
031	BHCS	ČSN 02 1131.2	M5x8	3
032	SHCS	ČSN 02 1143.52	M10x30	10
033	SHCS	ČSN 02 1143.52	M10x35	9
034	FHCS	ČSN 02 1151.2	M4x8	28
035	FHCS	ČSN 02 1151.2	M5x10	12
036	SSCS	ČSN 02 1181.2	M5x6	2
037	SSCS	ČSN 02 1181.2	M8x8	5
041	WASHER	ČSN 02 1702.1	10,5	2
042	TAPER DOWEL PIN	ČSN 02 2155.2	10x50	2
043	TAPER DOWEL PIN	ČSN 02 2155.2	8x45	2
044	CAP	ON 02 5611	36	2
045	CAP	ON 02 5611	40	2
046	CAP	ON 02 5611	42	1
047	ARRANGE WIPERS	4 11 67 1069		1
048	PLATE	4 11 53 5739		1
049	RUBBER COVER	4 11 58 1044		1
050	BHCS	ČSN 02 1131.2	M6x14	2
051	LONGITUDINAL TABLE "W"	1 11 01 0486.03		1
060	SCREW	4 11 41 1131		8
061	PLATE	2 11 53 5855		1
062	PLATE	2 11 53 5856		1
063	FHCS	ČSN 02 1151.2	M4x12	10

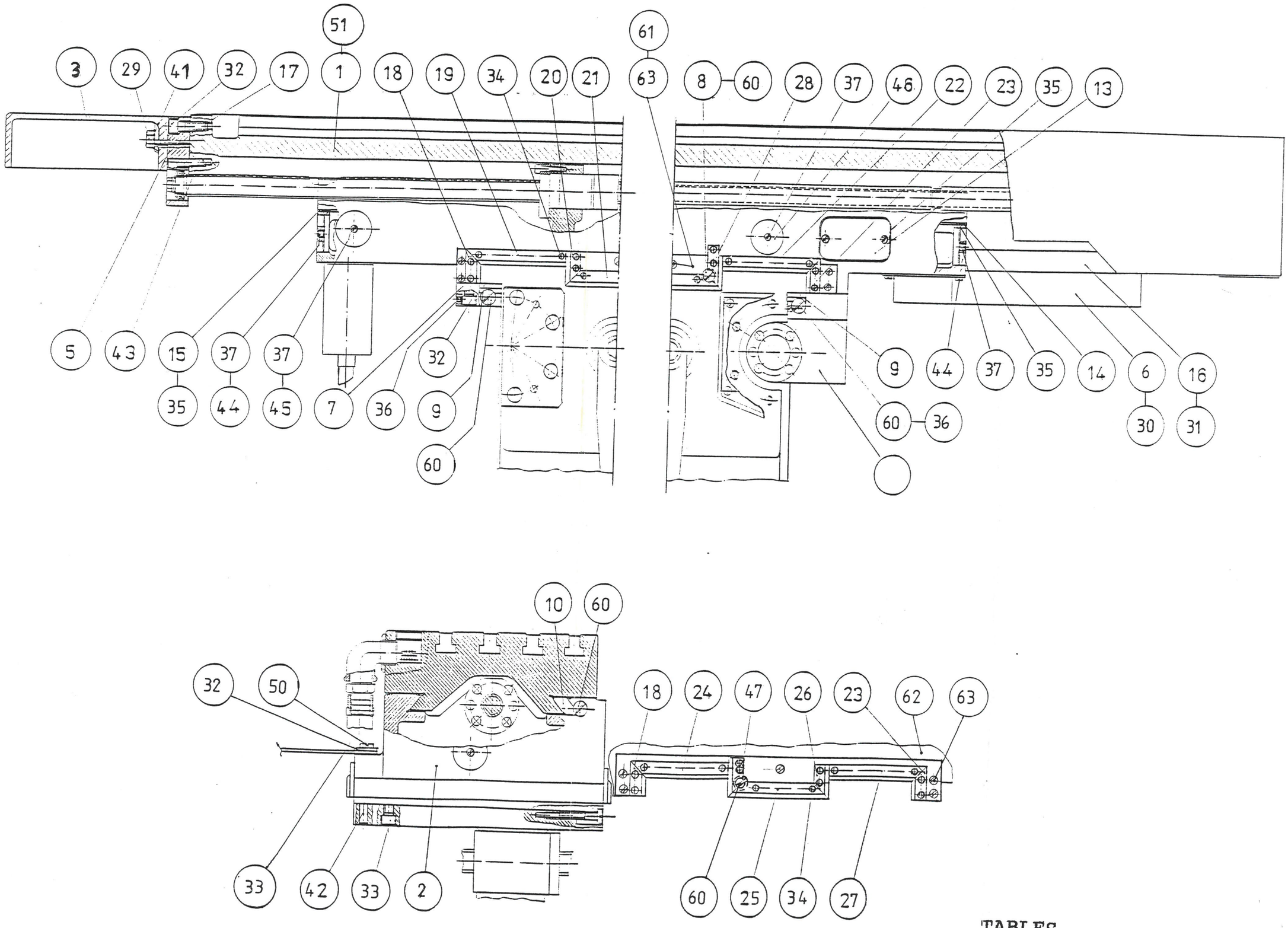

TABLES
DIAGRAM # 1.02
3 - 3

2.02 CENTRAL LUBRICATION DIAGRAM # 2/1.02, 2/2

ITEM#	NAME	DRAWING/STAND.	DIMENSION	PCS
091	COVER	3 11 07 1657		1
099	SHCS	ČSN 02 1143.52	M5x12	2
101	SHCS	ČSN 02 1143.52	M5x25	2
102	SHCS	ČSN 02 1143.52	M6x35	2
108	RING	ČSN 13 7932	NW 3	14
112	SCREW	ČSN 13 7992	NW 3	14
120	GREASE FITTING	ČSN 23 1470	MK6x1	2
121	BHCS	ČSN 02 1131.2	M4x40	4
122	GREAS SCREW	ČSN 13 7993	Js3	1
123	GREAS FITTING	ČSN 13 7972	Js2,5	1
124	SEAL WASHER	ČSN 02 9310.2	8x12	2
125	O-RING	ČSN 02 9281	6x2	1
126	O-RING	ČSN 02 9281	8x2	2
127	OIL CUP RESERVOIR	3 11 35 0782		2
128	COVER	4 11 53 5686		2
129	PIN	ČSN 02 2150.2	3x20	2
1100	DISTANCE RING	4 11 26 2688.01		2
1101	WASHER	4 11 26 2739		2
1102	CAP	4 11 30 0784		2
1103	OIL CUP RESERVOIR	3 11 35 0770.01		1
1104	OIL CUP RESERVOIR	3 11 35 0771.02		1
1105	SCREW	4 11 41 1051.01		1
1106	SCREW	4 11 41 1087.01		1
1107	CONNECTION	4 11 41 1090		1
1108	SEALING	4 11 58 1026		2
1109	ARRANGE NUTS	4 11 67 1010		2
1110	BHCS	ČSN 02 1131.2	M4x8	2
1112	FHCS	ČSN 02 1151.2	M5x12	2
1113	SSS	ČSN 02 1185.2	M5x8	1
1114	RING	ČSN 02 9281.2	12x2	4
1115	RING	ČSN 02 9310.2	13x17	5
1116	RING	ČSN 02 9310.2	21x27	2
1118	EYE	ČSN 13 7970	Js 5	2
1119	SCREW	ČSN 13 7990	Js 5	1
1120	SCREW	ČSN 13 7991	Js 5	1
1122	CABLE CLAMP	ČSN 37 0211	PVJ 12.5	2
1123	HOSE	ONP 63 5412.03	Js4x1100-1111	1
1124	HOSE	ONP 63 5412.03	Js4x1800-1111	1
1125	FILTER PIPE	10002-41		2
1126	LUBRICATING SYSTEM	VOGEL-MINI MFE	P.No.122 145 300	1
1127	CONNECTOR	VOGEL	P.No.179 990 200	1
1128	DOSER	VOGEL	P.No.511 320	12
1129	SWITCH	VOGEL	P.No.176 111 201	1
1130	COVER	VOGEL	P.No.898 420 001	1
1132	TUBE	4 11 56 1283		1

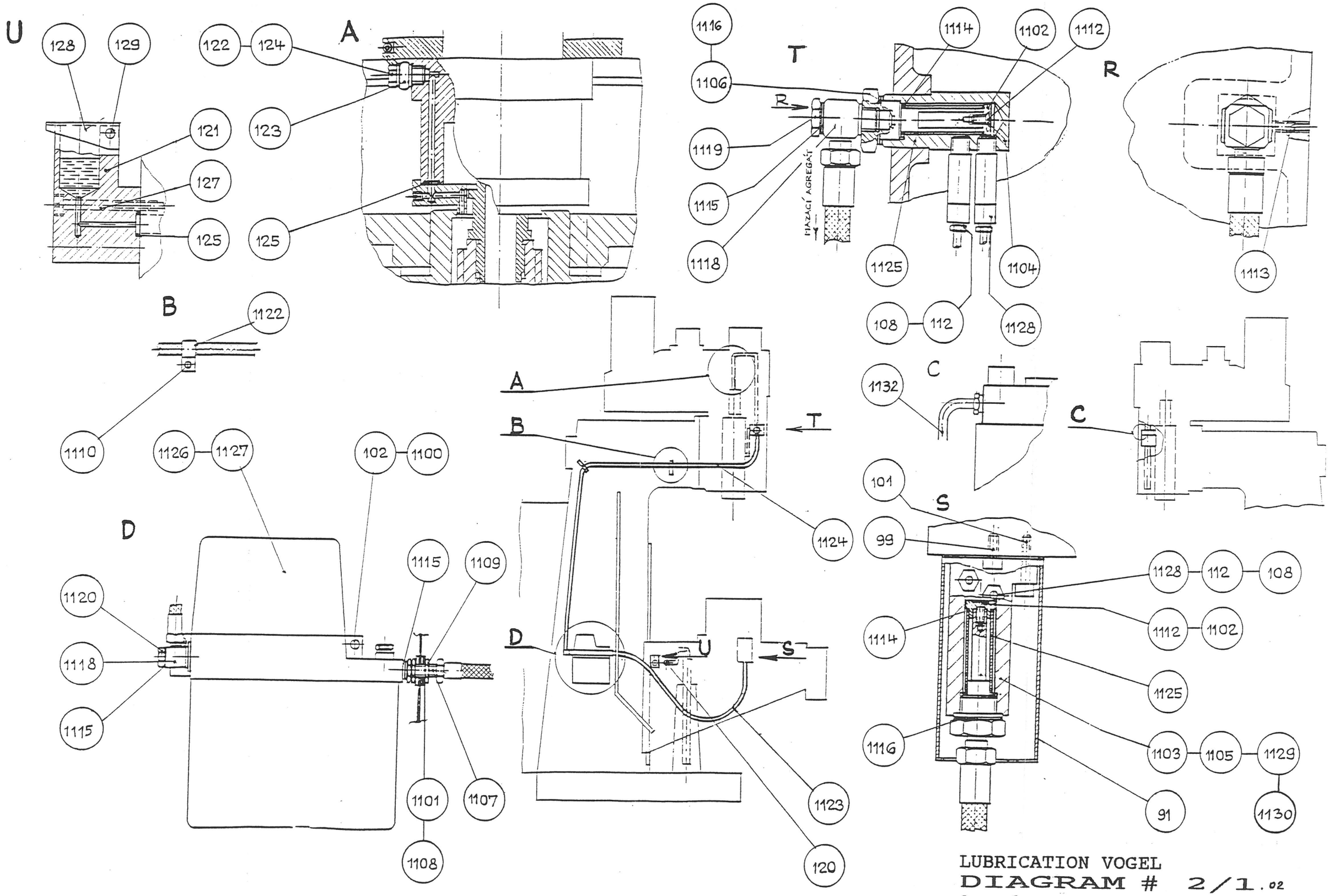

LUBRICATION VOGEL
DIAGRAM # 2/1.02
3 - 5

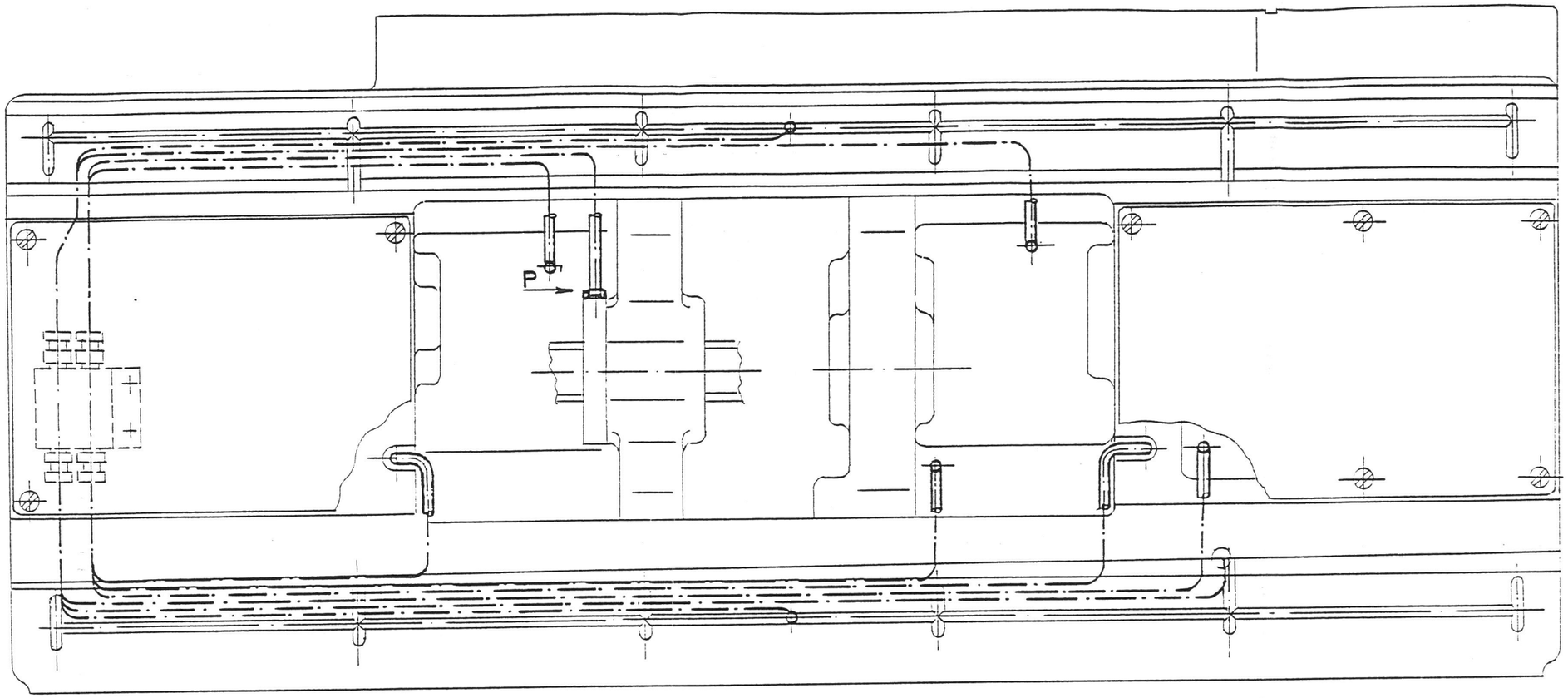

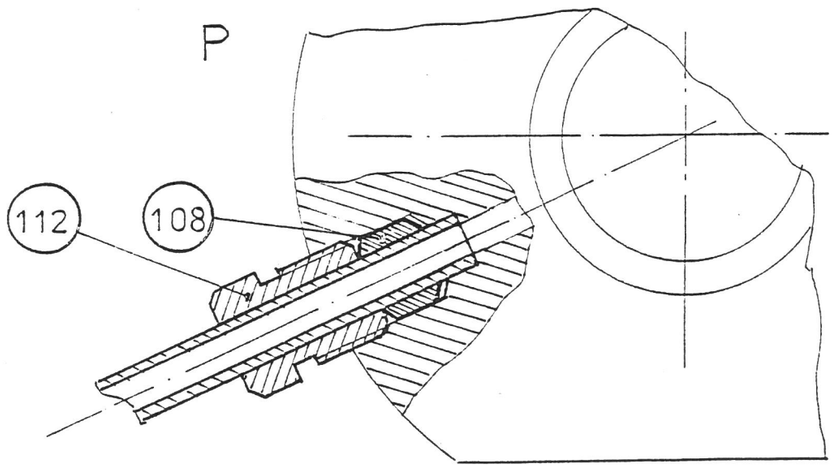

LUBRICATION
DIAGRAM # 2/2

ITEM#	NAME	DRAWING/STAND.	DIMENSION	PCS
220	LEVER	4 11 30 0569		2
221	SCREW	4 11 41 1118		2
222	SPRING	4 11 51 0297		2
223	HANDLE	ONP 02 5182.1	24	2
224	CAP	4 11 54 1883		1
225	FHCS	ČSN 02 1151.2	M4x10	6
226	ARRANGE SCREW	4 11 67 1145		1
227	ARRANGE PIN	4 11 67 1122		2
228	SCREW	4 11 41 1170		1
229	WASHER	4 11 21 0796		3
230	NUT	ČSN 02 1401.2		3
231	COVER	4 11 53 5686		2
922	KNEE ELEVATING SHAFT	3 11 11 2322.01		1
924	PIN	4 11 11 2251		2
925	CHAIN WHEEL	3 11 18 0719		1
927	CLUTCH	4 11 21 0740.01		1
929	RING	4 11 26 2728		1
931	RING	4 11 26 2752		1
936	SCREW	4 11 41 1110		1
947	FHCS	ČSN 02 1151.2	M5x8	1
954	TAPER PIN	ČSN 02 2153.2	5x36	1
955	KEY	ČSN 02 2562	8x7x20	1
956	RETAIN.RING FOR SHAFT	ČSN 02 2930	28	2
957	FLANGE	3 11 21 0739		1

3.07 KNEE DIAGRAM # 3/1.03 & 3/2.02

ITEM#	NAME	DRAWING/STAND.	DIMENSION	PCS
151	KNEE	1 11 01 0488.05		1
152	KNEE ELEVATING CRANK	2 11 05 0514		1
153	COVER	4 11 53 5721		1
154	PIN	4 11 11 1802.01		2
158	RETAINING RING	4 11 26 2531		1
159	RING	4 11 26 2703		1
160	GIB	3 11 53 6116		1
161	GIB	3 11 53 6117		1
162	GIB VERTICAL BACK	3 11 34 3401.01		2
163	KEEPER PLATE LH	2 11 34 3403.02		1
164	GIB VERTICAL SIDE	3 11 34 3540.01		1
165	KEEPER PLATE RH	2 11 34 3541.03		1
167	SCREW	4 11 41 1169		3
170	CAP	4 11 53 5594		1
171	TUBE	4 11 56 0711		1
172	ARRANGE WIPERS	4 11 67 1056		2
173	ARRANGE WIPERS	4 11 67 1128		1
174	ARRANGE WIPERS	4 11 67 1058		1
175	ARRANGE WIPERS	3 11 67 1055		1
177	ARRANGE HANDLE	4 11 67 0950		1
178	BHCS	ČSN 02 1151.2	M4x16	2
179	BHCS	ČSN 02 1151.2	M4x8	10
182	SHCS	ČSN 02 1143.52	M12x30	14
183	SHCS	ČSN 02 1143.52	M5x10	4
184	SHCS	ČSN 02 1143.52	M5x20	4
186	FHCS	ČSN 02 1151.2	M5x12	4
187	SSCS	ČSN 02 1181.2	M5x8	4
188	SSCS	ČSN 02 1181.2	M8x8	1
194	KEY	ČSN 02 2562	5x5x28	1
195	KEY	ČSN 02 2562	8x7x25	1
196	RETAINIG RING FOR SHAFT	ČSN 02 2930	16	1
197	JAM NUT	ČSN 02 3630	KM 4	1
198	LOCKWASHER	ČSN 02 3640	MB 4	1
199	BALL BEARING	ČSN 02 4630	6004	1
200	BALL BEARING	ČSN 02 4630	6005	1
201	BALL BEARING	ČSN 02 4630	6204	1
202	CONE BEARING	ČSN 02 4720	30304 A	1
203	AXIAL BALL BEARING	ČSN 02 4730	51108	1
204	O-RING	ČSN 02 9281.2	8x2	2
205	CAP	ON 02 5611	60	1
206	HANDLE	ON 02 5117.21	12	1
207	STAND	1 11 03 0531		1
208	SHCS	ČSN 02 1143.52	M10x25	4
209	SHCS	ČSN 02 1143.52	M6x20	4
210	DIAL RING "M"	4 11 28 0319		1
211	KNEE ELEVATING SCREW"M"	3 11 38 0473		1
212	KNEE ELEVATING NUT "M"	3 11 38 0474		1
213	BEVEL GEAR "M"	3 11 18 0710		1
214	BEVEL GEAR "M"	3 11 18 0711		1
215	DIAL RING "W"	4 11 28 0320		1
216	KNEE ELEVATING SCREW"W"	3 11 38 0475		1
217	KNEE ELEVATING NUT "W"	3 11 38 0476		1
218	BEVEL GEAR "W"	3 11 18 0712		1
219	BEVEL GEAR "W"	3 11 18 0713		1

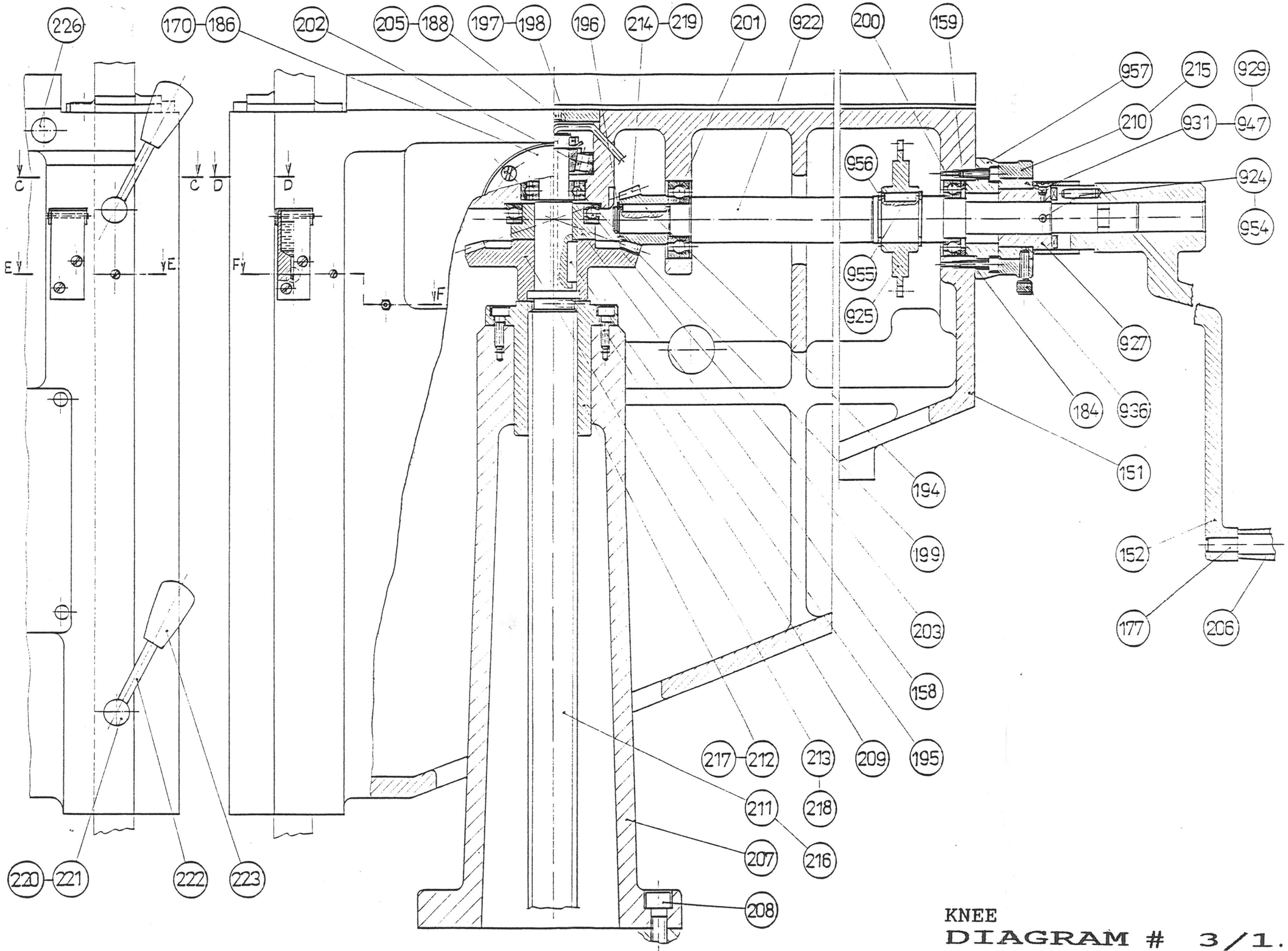

KNEE
DIAGRAM # 3/1.03

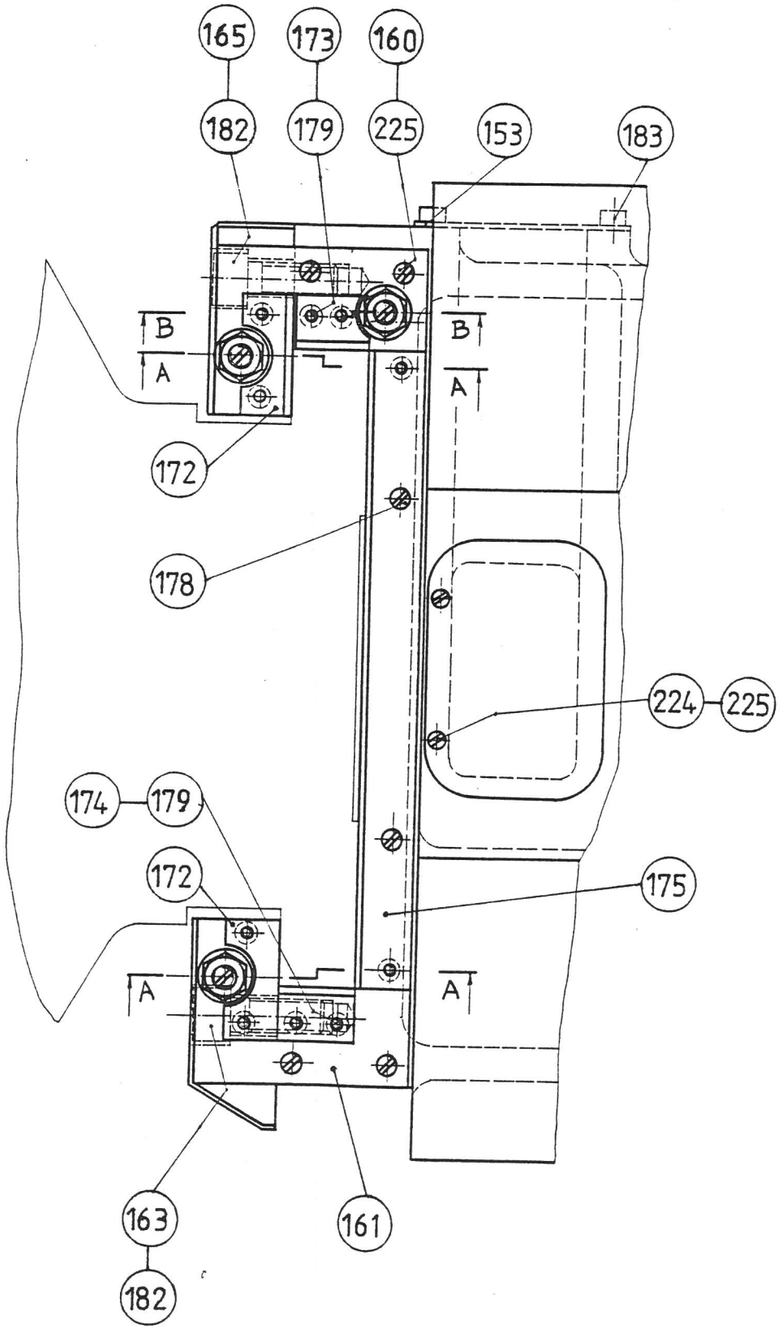

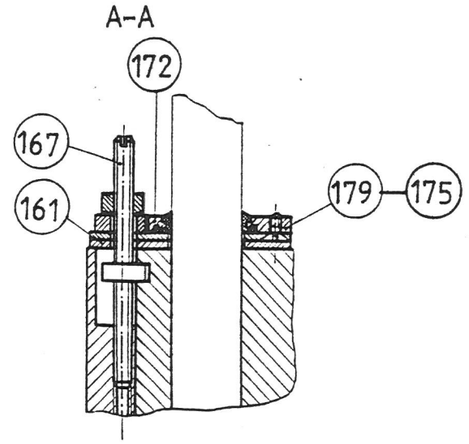

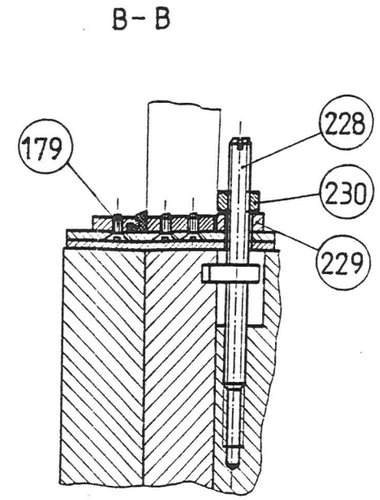

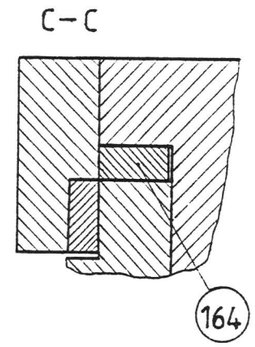

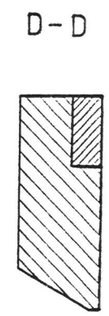

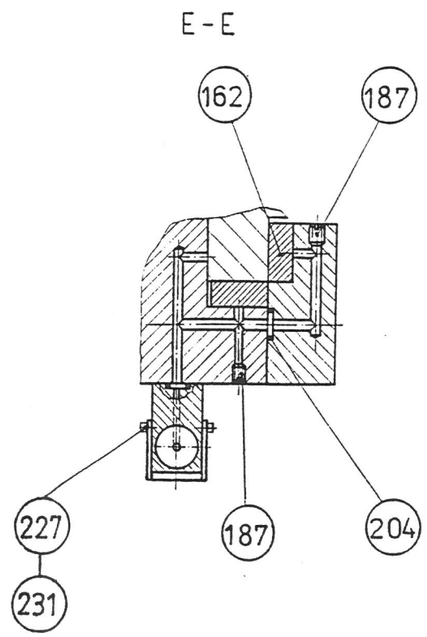

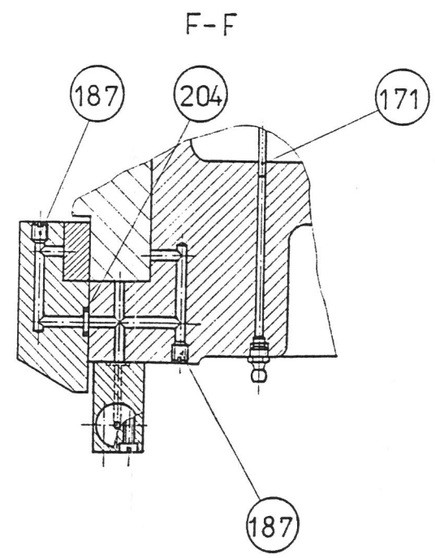

KNEE
DIAGRAM # 3/2.02
3 - 10

4.01 FLOOD COOLANT SYSTEM DIAGRAM # 4.01

ITEM#	NAME	DRAWING/STAND.	DIMENSION	PCS
232	MANIFOLD	4 11 34 3748		1
233	HOSE COOLANT FITTING	4 11 41 1049		1
234	VALVE	4 11 60 2107.01		1
235	HHCS	ČSN 02 1103.2	M6x16	4
236	HHCS	ČSN 02 1131.2	M5x8	2
237	SHCS	ČSN 02 1143.52	M6x30	2
238	WASHER	ČSN 02 1702.1	6,4	4
239	SEAL WASHER	ČSN 02 9310.2	27x32	1
240	CABEL CLIP	ČSN 37 0212	6820	1
241	PLASTIC HOSE		20x3,5-1800	1
242	NOZZLE FITTING	545/88 TOS LIPNÍK	G 1/4"	1
243	NOZZLE FITTING	748/88 TOS LIPNÍK	KR 6	1
244	JOINT LINK	749/88 TOS LIPNÍK		26
245	HOSE CLIP		3	3
246	HOSE COOLANT FITTING	4 11 41 1085		1
247	PLASTIC HOSE		20x29-1500	1
248	90DEG.COOLANT RET.FITT.	ČSN 13 8207.0	Js 3/4"	1
249	NUT	4 11 42 0387		1
250	NEEDLE	4 11 07 1658		1
251	GRIP	4 11 52 0188		1
252	BHCS	ČSN 02 1131.2	M5x8	2
253	NUT	ČSN 02 1401.2	M5	2
254	WASHER	ČSN 02 1702.1	5,3	2
255	PLUG	ČSN 30 1399.1	60	1
256	PLUG	4 11 30 0856		1
257	O-RING	ČSN 029280.2	60x50	1
258	PLUG	4 11 42 0419		1
259	SEALING RING	ČSN 02 9310.2	13x17	1
260	COOLANT PUMP	3 COA-2-12 P2		1

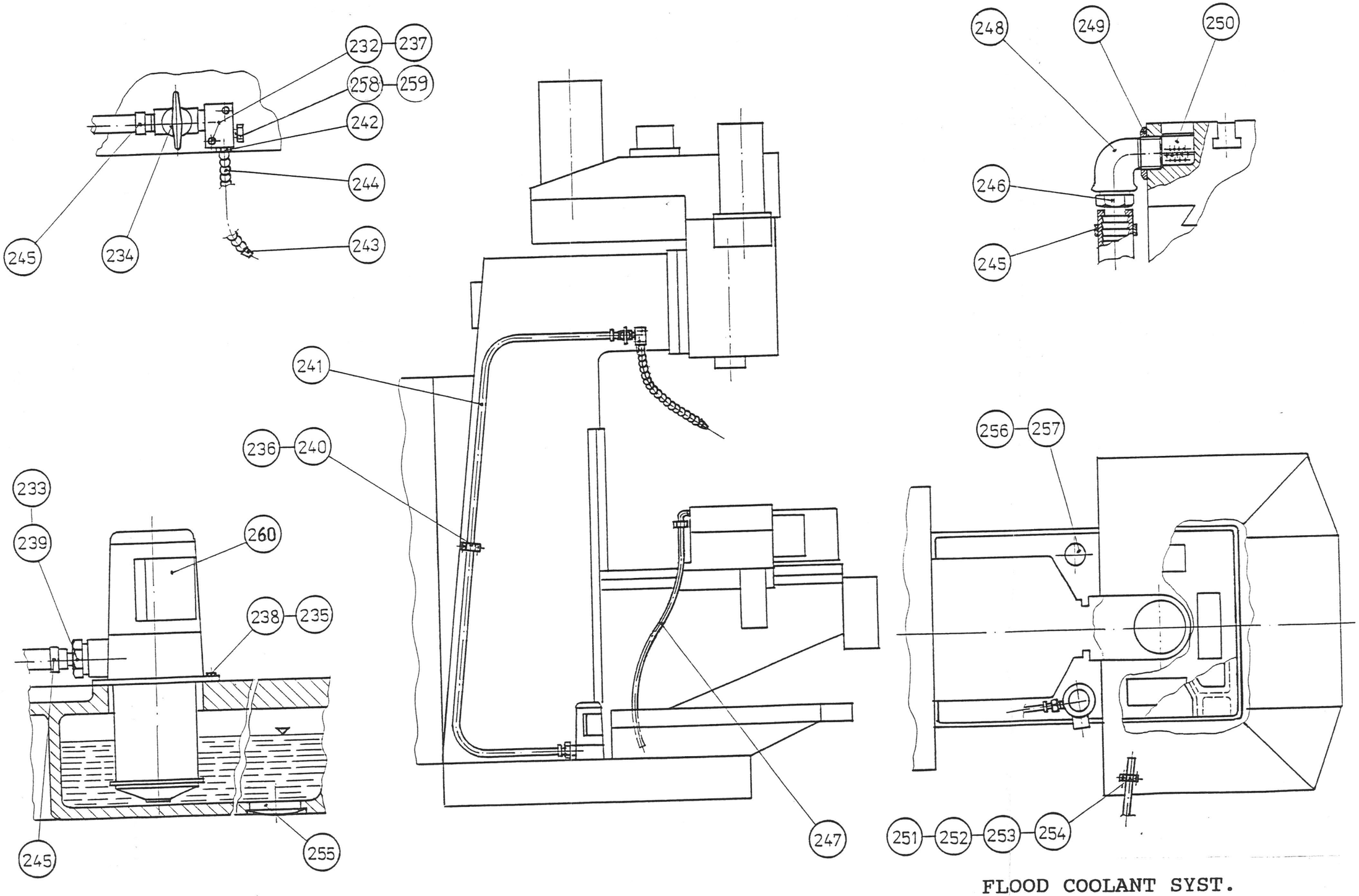

FLOOD COOLANT SYST.
DIAGRAM # 4.01
3 - 12

5.01 X-AXIS LIMIT SWITCH DIAGRAM # 5.01

ITEM	NAME	DRAWING/STAND.	DIMENSION	PCS
271	HOLDER	3 11 34 3527.01		1
272	TRIP DOG	3 11 34 3533		1
273	TRIP DOG	3 11 34 3574		1
274	SHCS	ČSN 02 1143.52	M5x10	4
275	SHCS	ČSN 02 1143.52	M6x20	4
277	TAPER PIN	ČSN 02 2153	5x25	2
278	SWITCH LIMIT AND HOME	ELEKTRO-PRAGA	3593-42595	1
279	SHCS	ČSN 02 1143.52	M6x14	4

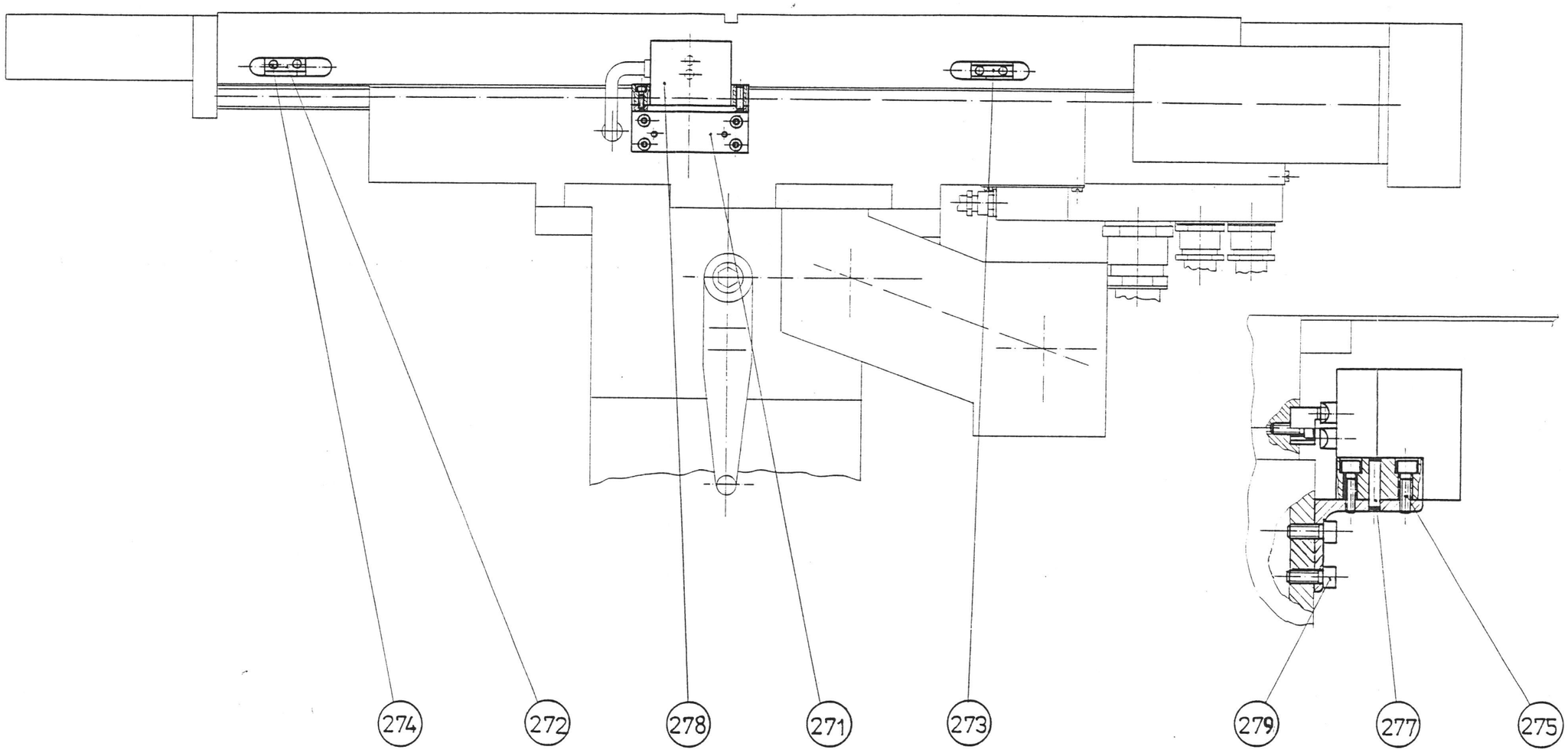

X-LIMIT SWITCH
DIAGRAM # 5.01
3 - 14

6.01 Y-AXIS LIMIT SWITCH DIAGRAM # 6.02

ITEM#	NAME	DRAWING/STAND.	DIMENSION	PCS
272	TRIP DOG	4 11 34 3533		1
273	TRIP DOG	4 11 34 3574		1
274	SHCS	ČSN 02 1143.52	M5x16	4
275	SHCS	ČSN 02 1143.52	M6x20	4
293	HOLDER	3 11 54 1854.01		1
295	SHCS	ČSN 02 1143.52	M6x12	2
296	PIN	ČSN 02 2150.2	5x25	2
297	TAPER PIN	ČSN 02 2155.2	6x25	2
298	SWITCH LIMIT AND HOME	ELEKTRO-PRAGA	3593-02 595	1

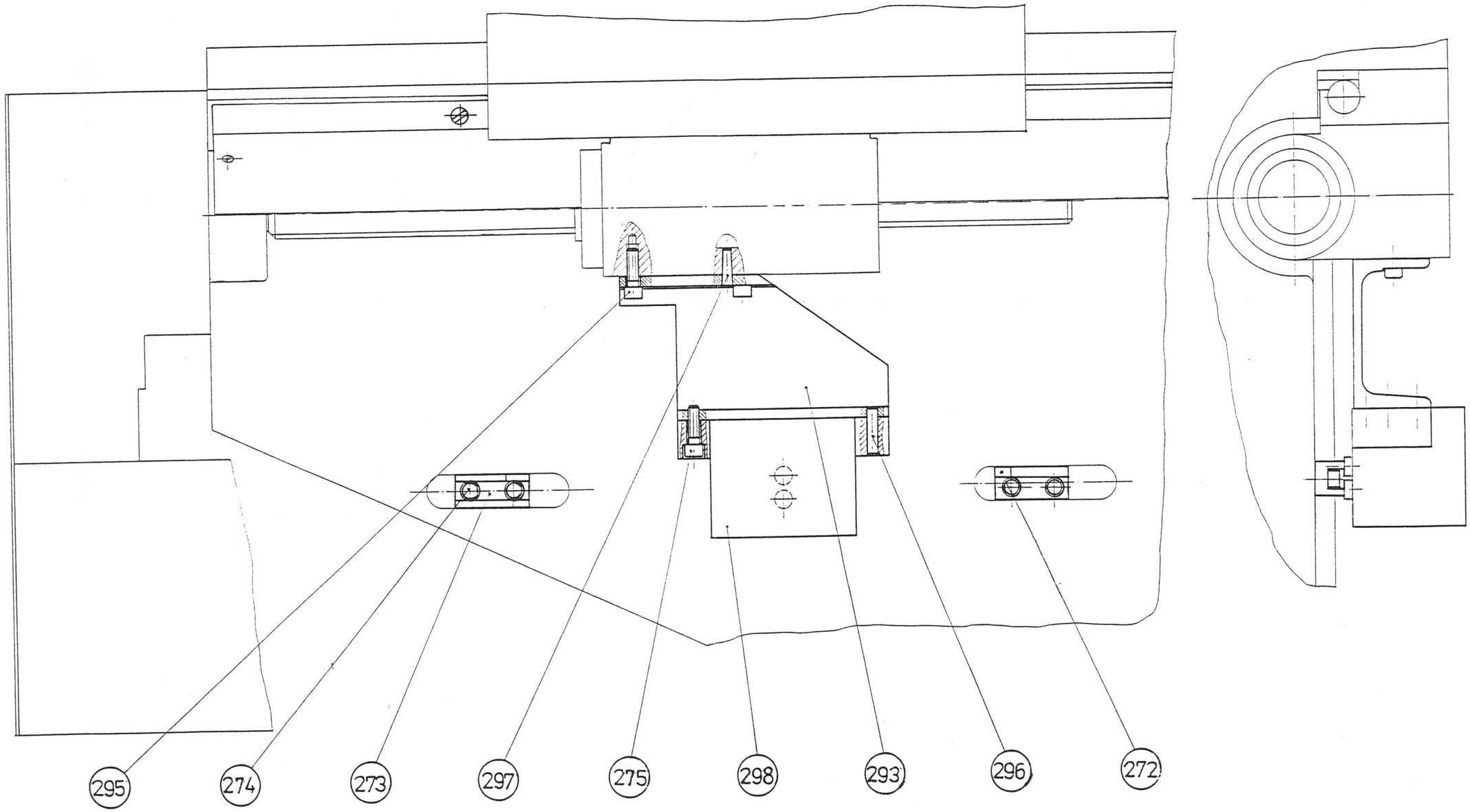

Y-LIMIT SWITCH
DIAGRAM # 6.01
3 - 16

7.03 Z-AXIS LIMIT SWITCH DIAGRAM # 7

ITEM#	NAME	DRAWING/STAND.	DIMENSION	PCS
311	TRIP DOG	4 11 34 3739		1
312	TRIP DOG	4 11 34 3738		1
313	HOLDER	4 11 53 5688.01		1
314	MOUTING BAR	4 11 54 1959		1
315	MOUTING BRACKET	4 11 54 1879.01		1
316	SHCS	ČSN 02 1143.52	M5x16	2
317	SHCS	ČSN 02 1143.52	M6x16	4
318	SHCS	ČSN 02 1143.52	M6x10	2
319	SHCS	ČSN 02 1143.52	M6x18	3
320	DOWEL PIN	ČSN 02 2150.2	4x16	2
321	MICROSWITCH HONEYWELL	BZ-2RQ 18M-A2		2
322	WASHER	ČSN 02 1702.1	6,4	4

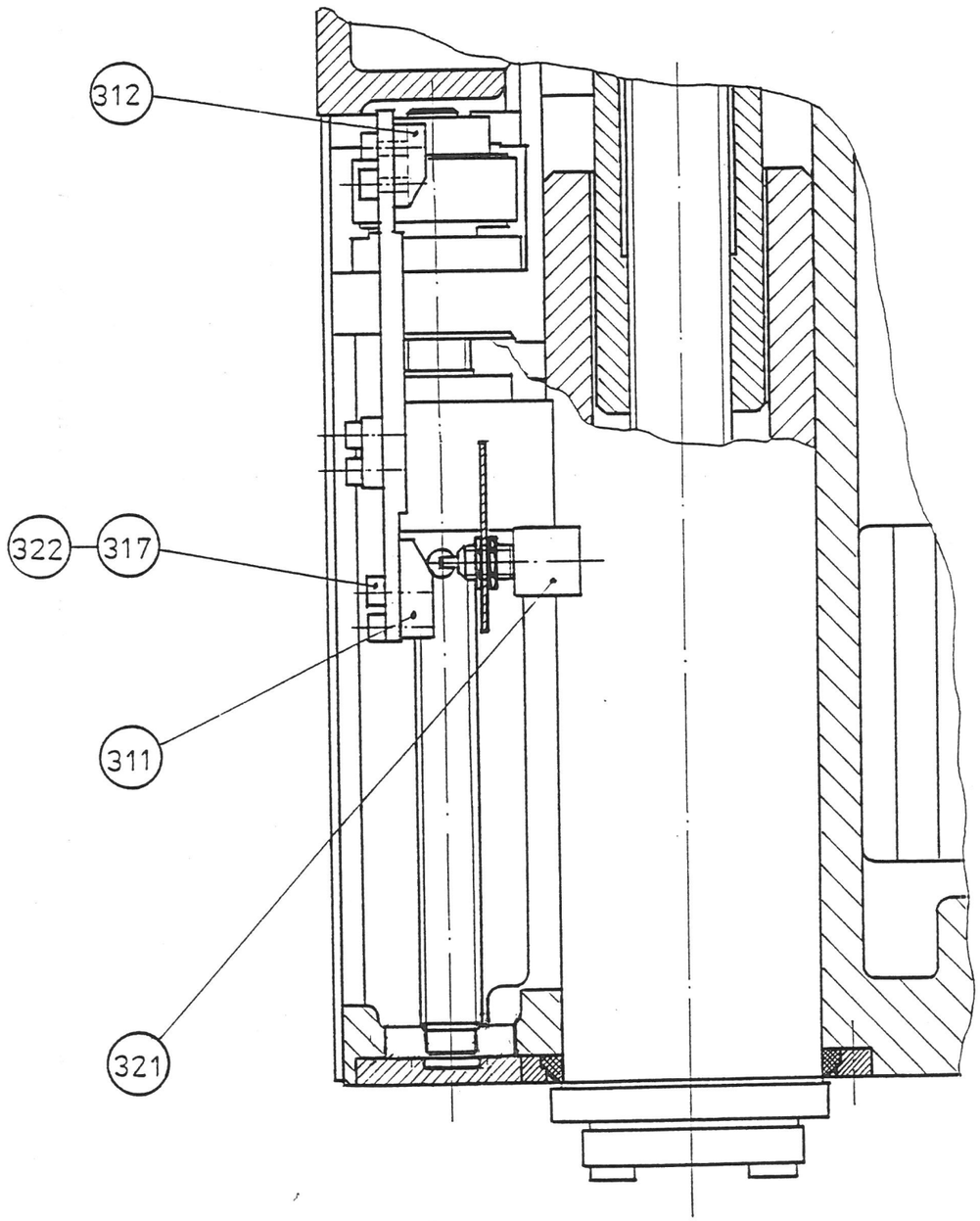

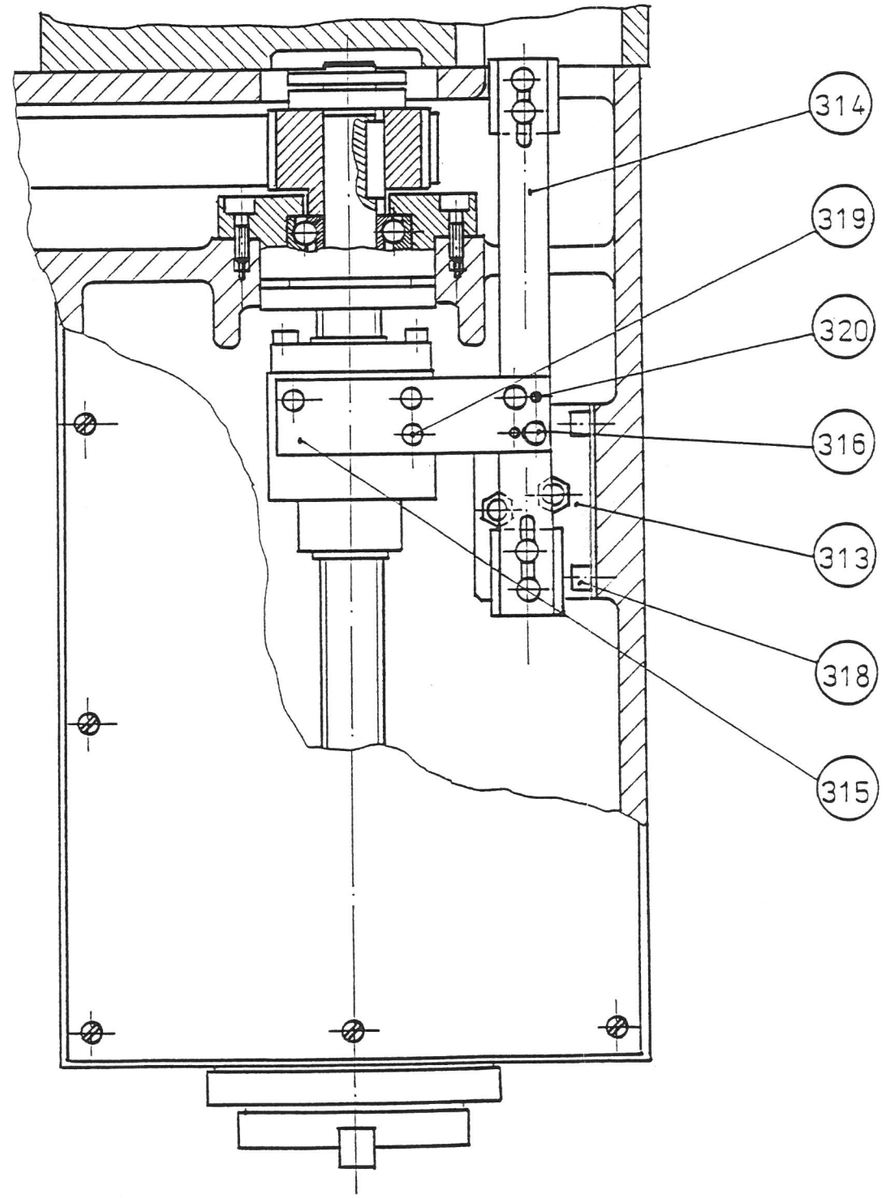

Z-LIMIT SWITCH
DIAGRAM # 7
3 - 18

8.06 X-AXIS BALLSCREW DRIVE DIAGRAM # 8.01

ITEM#	NAME	DRAWING/STAND.	DIMENSION	PCS
330	X-AXIS MOT.MOUT.BRACKET1	11 03 0554.04		1
331	TIMING PULLEY	4 11 16 1460.01	24 TOOTH	1
332	FLANGE	4 11 21 0728		1
333	DISTANCE TUBE	4 11 26 2667		1
334	SEAL	4 11 26 2670		1
335	NUT	4 11 42 0401		1
336	COVER FRONT	3 11 53 5595		1
337	GASKET	3 11 58 1011		1
338	GASKET	3 11 58 1028		1
339	SHCS	ČSN 02 1143.52	M10x30	4
340	SHCS	ČSN 02 1143.52	M5x10	1
341	SHCS	ČSN 02 1143.52	M6x16	6
342	SHCS	ČSN 02 1143.52	M6x25	6
343	SHCS	ČSN 02 1143.52	M8x20	4
344	FHCS	ČSN 02 1151.2	M5x10	13
345	FHCS	ČSN 02 1176.2	M10x25	4
346	SSS	ČSN 02 1181.2	M8x8	1
347	SSS	ČSN 02 1185.2	M6x10	1
348	NUT	ČSN 02 1401.2	M10	4
349	WASHER	ČSN 02 1702.1	10,5	4
350	WASHER	ČSN 02 1702.1	8,4	4
351	TAPER PIN	ČSN 02 2155.2	8x45	2
352	KEY	4 11 33 0126		1
353	RETAIN.RING FOR SHAFT	ČSN 02 2930	17	1
354	BALL BEARING	ČSN 02 4630	6003 A 2Z	1
355	BALL BEARING	ČSN 02 4630	6004 Z	1
356	PLUG	ON 02 5611	40	1
357	TIMING BELT	GEARBELT BROWNING	225 L 100	1
358	BEARING SKF	BSA 204 C		2
359	BALLSCREW LONGITUDINAL	2 11 38 0464		1
361	PULLEY DRIVE	3 11 16 1461.02	12 TOOTH	1
362	RING	4 11 26 2723		2
363	RETAIN.RING FOR SHAFT	ČSN 02 2930	28	2
364	PLATE DRIVE MOTOR	3 11 34 3503.01		1
365	DRIVE MOTOR			1

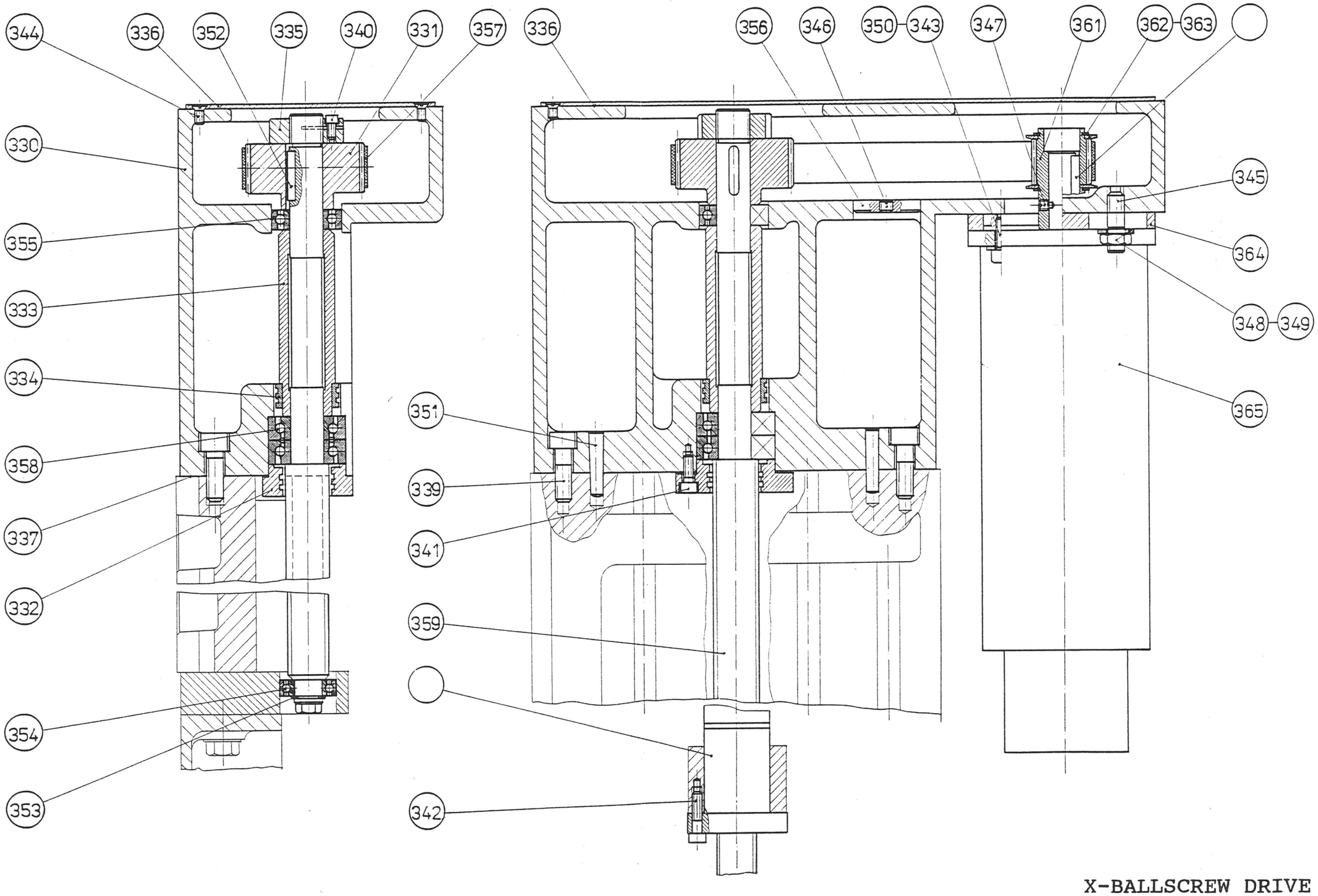

X-BALLSCREW DRIVE
DIAGRAM # 8.01
3 - 20

9.04 Y-AXIS BALLSCREW DRIVE DIAGRAM # 9.02

ITEM#	NAME	DRAWING/STAND.	DIMENSION	PCS
331	TIMING PULLEY	4 11 16 1460.01	24 TOOTH	1
335	NUT	4 11 42 0401		1
340	SHCS	ČSN 02 1143.52	M5x10	1
343	SHCS	ČSN 02 1143.52	M8x20	4
344	FHCS	ČSN 02 1151.2	M5x10	12
345	FHCS	ČSN 02 1176.2	M10x25	4
347	SSS	ČSN 02 1185.2	M6x10	1
348	NUT	ČSN 02 1401.2	M10	4
349	WASHER	ČSN 02 1702.1	10,5	4
350	WASHER	ČSN 02 1702.1	8,4	4
352	KEY	4 11 33 0126		1
357	TIMING BELT	GEARBELT BROWNING	225 L 100	1
358	BEARING SKF	BSA 204 C		2
361	PULLEY MOTOR	3 11 16 1461.02	12 TOOTH	1
362	RING	4 11 26 2723		2
363	TRU-ARC RING	ČSN 02 2930	28	6
364	PLATE DRIVE MOTOR	3 11 34 3503.01		1
365	DRIVE MOTOR			1
380	Y-AXIS MOT.MOUT.BRACKET	1 11 03 0552.02		1
382	FLANGE	4 11 21 0727		1
383	HOLDER OF COVER	4 11 24 0247		1
384	SHCS	ČSN 02 1143.52	M6x20	6
385	FLANGE	4 11 26 2668.01		1
386	COVER FRONT	2 11 53 5405		1
387	GASKET	3 11 58 1027		1
388	SHCS	ČSN 02 1143.52	M10x100	1
389	SHCS	ČSN 02 1143.52	M10x35	3
391	SHCS	ČSN 02 1143.52	M6x18	6
392	FHCS	ČSN 02 1151.2	M5x12	9
393	TAPER PIN	ČSN 02 2155.2	10x36	2
394	ELECTR.CONDUIT FITTING	ČSN 37 0185.1	P 29	1
396	BALLSCREW ACROSS	2 11 38 0477		1
398	COVER DRIVE	3 11 07 1830		1
399	FHCS	ČSN 02 1151.2	M5x10	6
400	SHCS	ČSN 02 1143.52	M5x30	4
402	COVER	4 11 53 6114		1
403	RING	ČSN 13 7932	Js 3	1
404	SCREW	ČSN 13 7992	Js 3	1

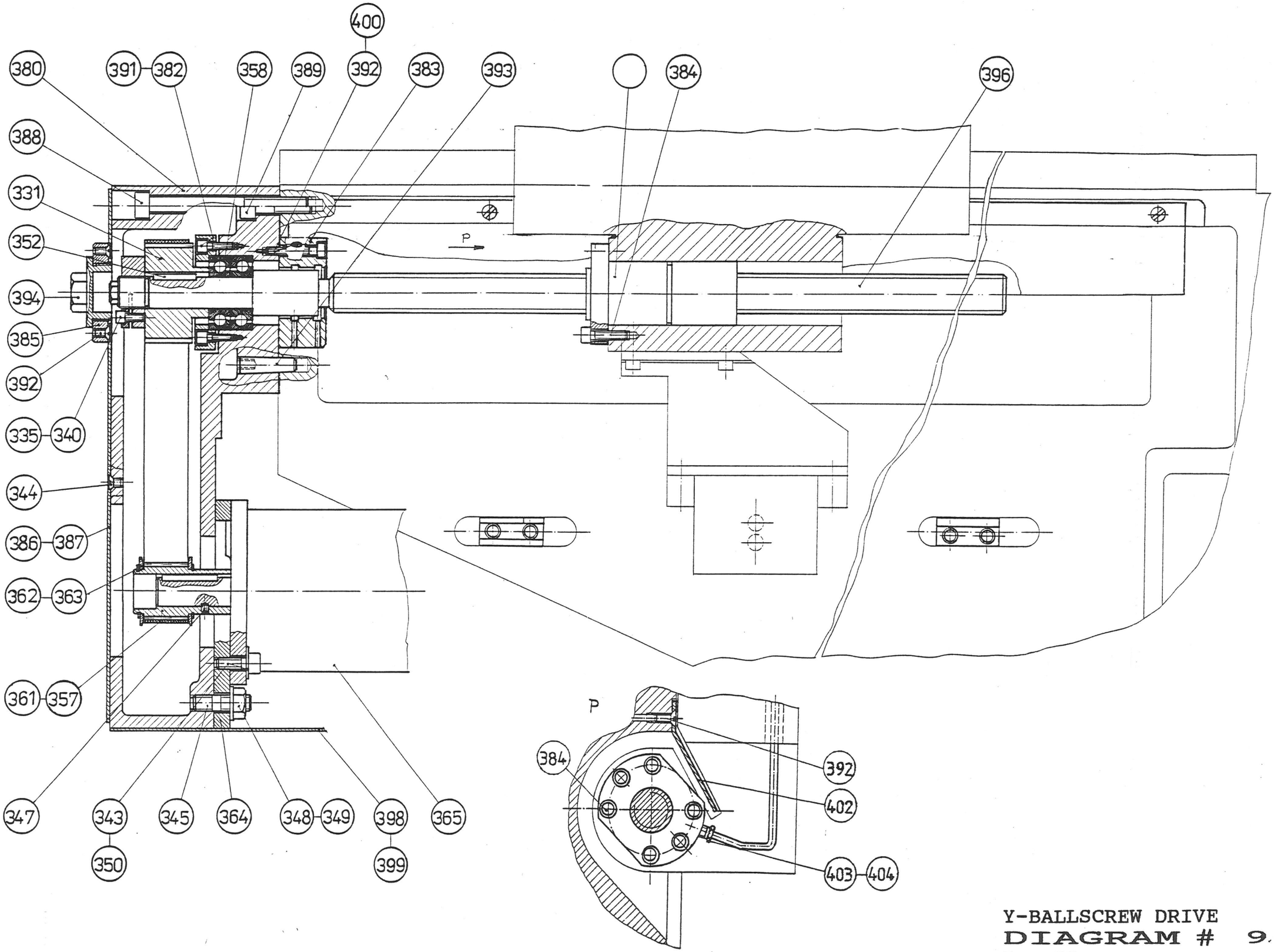

Y-BALLSCREW DRIVE
DIAGRAM # 9.02
3 - 22

10.03 Z-AXIS BALLSCREV DRIVE DIAGRAM # 10.02

ITEM#	NAME	DRAWING/STAND.	DIMENSION	PCS
331	TIMING PULLEY	4 11 16 1460.01	24 TOOTH	1
335	NUT	4 11 42 0401		1
340	SHCS	ČSN 02 1143.52	M5x10	1
343	SHCS	ČSN 02 1143.52	M8x20	4
345	FHCS	ČSN 02 1176.2	M10x25	4
347	SSS	ČSN 02 1185.2	M6x10	1
348	NUT	ČSN 02 1401.2	M10	4
349	WASHER	ČSN 02 1702.1	10,5	4
350	WASHER	ČSN 02 1702.1	8,4	4
352	KEY	4 11 33 0126		1
357	TIMING BELT	GEARBELT BROWNING	225 L 100	1
358	BEARING SKF	BSA 204 C		2
361	PULLEY MOTOR	3 11 16 1461.02	12 TOOTH	1
362	RING	4 11 26 2723		2
363	TRU-ARC RING	ČSN 02 2930	28	2
364	PLATE DRIVE MOTOR	3 11 34 3503.01		1
365	DRIVE MOTOR			1
420	MOUT.BRACKET BEARINGS	3 11 21 0725		1
421	BEARING FLANGE	3 11 21 0802		1
422	BODY FLANGE	4 11 21 0729		1
423	SHCS	ČSN 02 1143.52	M5x12	4
424	SHCS	ČSN 02 1143.52	M6x20	12
425	SHCS	ČSN 02 1143.52	M6x30	5
427	TAPER PIN	ČSN 02 2155.2	6x25	4
430	BALLSCREW VERTICAL	2 11 38 0466		1
431	BALLNUT			1
432	SHCS	ČSN 02 1143.52	M5x16	6
433	CUBE	1 11 35 0732.01		1
434	PLUG	ČSN 37 0185.10	P 42	1
435	STOP	4 11 11 2283		1

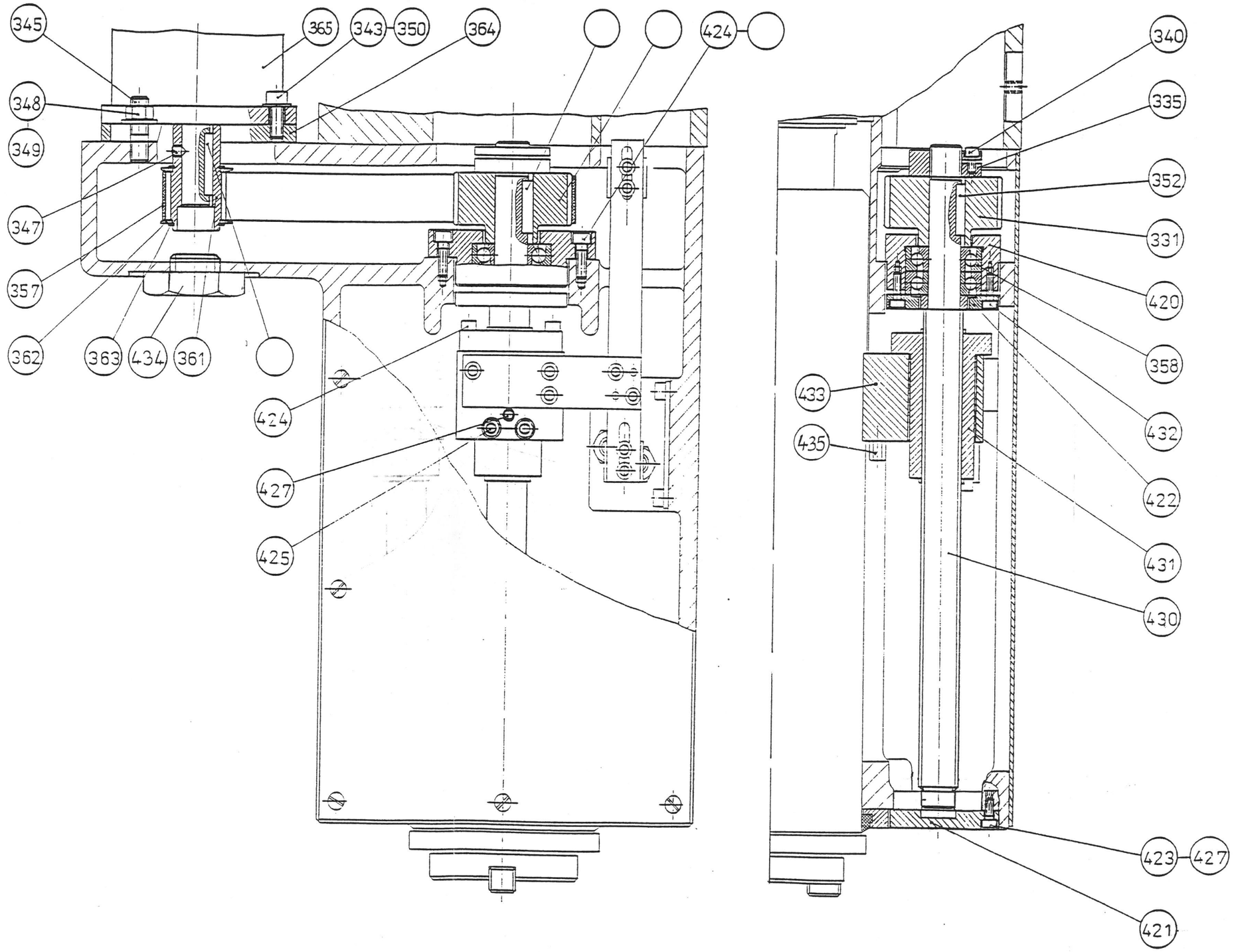

Z-BALLSCREW DRIVE
DIAGRAM # 10.02
3 - 24

11.11 SPINDLE DRIVE 2-SPEED DIAGRAM # 11/1.05 & 11/2.01

ITEM#	NAME	DRAWING/STAND.	DIMENSION	PCS
471	TIMING PULLEY CASTING	1 11 03 0568.05		1
472	TOP BEARING HOUSING	2 11 03 0569.02		1
473	PULLEY COVER	4 11 07 1930		1
474	PULLEY	2 11 09 0698.02		1
475	PULLEY	2 11 09 0721.02		1
476	PULLEY	3 11 09 0720.01		1
477	PULLEY	3 11 09 0701.03		1
478	TIGHT PULLEY	4 11 09 0704.01		1
479	PIN	4 11 11 2304		2
480	PIN	4 11 11 2305		2
481	TIGHT PIN	4 11 11 2306		1
482	PIN	4 11 11 2307		1
483	PIN	4 11 11 2308		1
484	BAR	3 11 11 2309		1
485	PIN	4 11 11 2310.01		1
486	CLUTCH	3 11 16 1458		2
487	CLUTCH	3 11 16 1459.01		1
488	SHAFT	2 11 19 0208.03		1
489	RING V.	4 11 26 2855		1
490	RING	4 11 26 2707		1
491	RING	4 11 26 2708.01		1
492	RING	4 11 26 2861		1
493	RING	4 11 26 2710.01		1
494	RING VI.	4 11 26 2856		1
495	RING II.	4 11 26 2852.01		1
496	HOLDER	4 11 34 3534		2
497	HOLDER FOR TIGHT	4 11 34 3535		1
498	SEGMENT	3 11 34 3536.01		1
499	CAP, NC	3 11 34 3538.02		1
500	ARRANGE SPRING	4 11 67 0989		1
501	SHAFT	4 11 11 2412		1
502	HHCS	ČSN 02 1103.2	M8x60	5
504	BHCS	ČSN 02 1131.2	M5x8	7
505	SHCS	ČSN 02 1143.52	M12x25	4
506	SHCS	ČSN 02 1143.52	M6x12	16
507	SHCS	ČSN 02 1143.52	M6x14	7
508	SHCS	ČSN 02 1143.52	M6x30	8
509	SHCS	ČSN 02 1143.52	M8x12	8
510	STUD	ČSN 02 1176.2	M10x25	10
511	NUT	ČSN 02 1401.2	M10	10
512	WASHER	ČSN 02 1702.1	10.5	10
513	DOWEL PIN	ČSN 02 2150.2	10x20	1
514	TAPER PIN	ČSN 02 2155.2	6x25	6
515	TAPER PIN	ČSN 02 2155.2	6x36	2
516	TAPER PIN	ČSN 02 2155.2	8x30	2
517	KEY	ČSN 02 2562	10x8x56	2
518	KEY	ČSN 02 2562	8x7x50	1
519	SNAP RING FOR BORE	DIN 472	J8	2
520	RETAIN.RING FOR SHAFT	ČSN 02 2930	10	2
521	RETAIN.RING FOR SHAFT	ČSN 02 2930	17	1
522	RETAIN.RING FOR SHAFT	ČSN 02 2930	35	1
523	RETAIN.RING FOR BORE	ČSN 02 2931	35	1
524	RETAIN.RING FOR BORE	ČSN 02 2931	62	2
525	RETAIN.RING FOR BORE	ČSN 02 2931	68	1
527	LOCK NUT	ČSN 02 3630	KM 3	1

ITEM#	NAME	DRAWING/STAND.	DIMENSION	PCS
528	LOCK NUT	ČSN 02 3630	KM 6	1
529	LOCKING WASHER	ČSN 02 3640	MB 3	1
530	LOCKING WASHER	ČSN 02 3640	MB 6	1
531	BALL	ČSN 02 3680	5	2
532	BALL BEARING	(SKF)	6003 Z/P52	2
533	BALL BEARING	(SKF)	6007 Z/P52	2
534	BALL BEARING	(SKF)	6008 Z/P52	2
535	BALL BEARING	(SKF)	7207 CD/P4A GB	1
536	BALL BEARING	(SKF)	7208 CD/P4A GB	1
537	BELT	OPTIBELT	RB 841 PK 5	1
538	BELT	OPTIBELT	RB 890 PK 8	2
540	DRIVE	2 11 09 0685.02		1
541	QUIL SEAL RETAIN.RING	3 11 21 0730.01		1
542	FLANGE NC	3 11 21 0731.01		1
543	ARRANGE LOCK NUT	4 11 67 1112		1
544	RING NC	4 11 26 2711		1
545	BODY NC HEAD	1 11 01 0485.03		1
546	FHCS	ČSN 02 1151.2	M5x10	10
549	RETAIN.RING FOR BORE	ČSN 02 2931	110	1
550	SEAL	ČSN 02 9295	110	1
551	SHCS	ČSN 02 1143.52	M5x16	12
552	SSS	ČSN 02 1181.2	M6x8	2
553	PRESSURE INSERT	4 11 43 0435		2
554	BALL BEARING	(SKF)	7014 ACD/P4ADFB	2
555	SHCS	ČSN 02 1143.52	M5x12	4
556	CAP	ON 02 5611	47	1
557	SSS	ČSN 02 1181.2	M8x8	1
558	PLATE	2 11 06 0831.01		1
559	PULLEY	2 11 09 0727.02		1
560	FLANGE	4 11 26 2860		1
562	FAN HOLDER	4 11 53 5669		2
563	SHCS	ČSN 02 1143.52	M10x40	1
564	BHCS	ČSN 02 1131.2	M4x16	2
565	NUT	ČSN 02 1401.2	M4	2
566	HELI.SPRING WASHER LOCK	ČSN 02 1740.0	4	2
567	SCREW	ČSN 02 1143.52	M6x16	2
568	MAINE MOTOR	EMR 4BP 100L-4 IM 3681		1
569	FAN	EBM W2S 130-AB03-09		1
572	COVER	3 11 53 5417.01		1
573	ARRANGE BELT	4 11 67 1134		1 pair
574	DIAL RING	4 11 26 2755		1
575	RING III.	4 11 26 2853		1
576	RING IV.	4 11 26 2854		1
577	RING VII.	4 11 26 2857		1
578	RING VIII.	4 11 26 2858		1
579	FHCS	ČSN 02 1151.2	M5x12	6
580	WAVE SPRING WASHER	SMALLEY	SSB 0268	1
581	RING	4 11 26 2907		1
582	RING NC	4 11 26 2850		1
583	RING I.	4 11 26 2851		1
587	WAVE SPRING WASHER	SMALLEY	SSB 0138	1
588	BELT	OPTIBELT	RB 970 PK 14	1

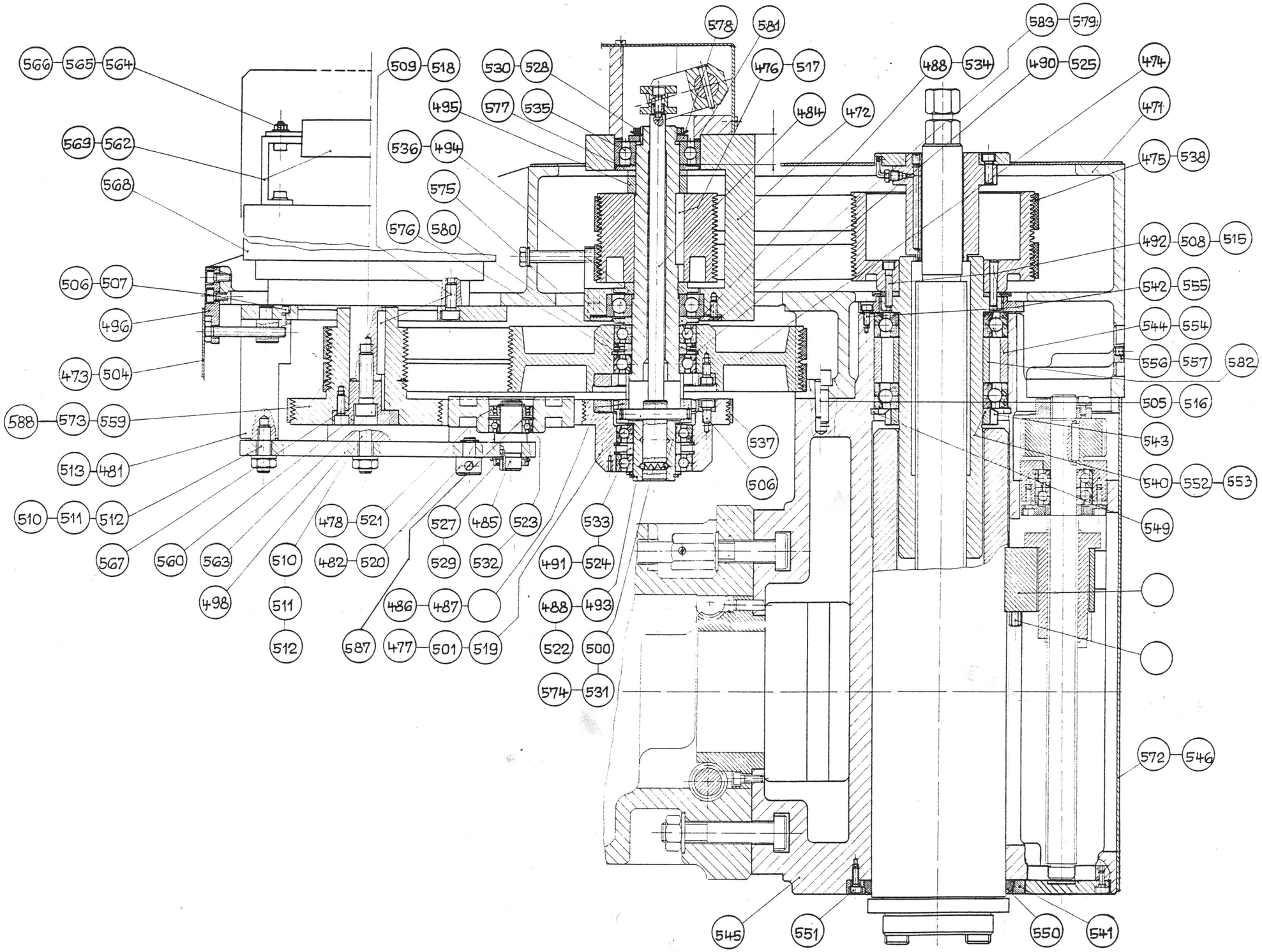

SPINDLE DRIVE 2 SPEED
DIAGRAM # 11/1.05
3 - 27

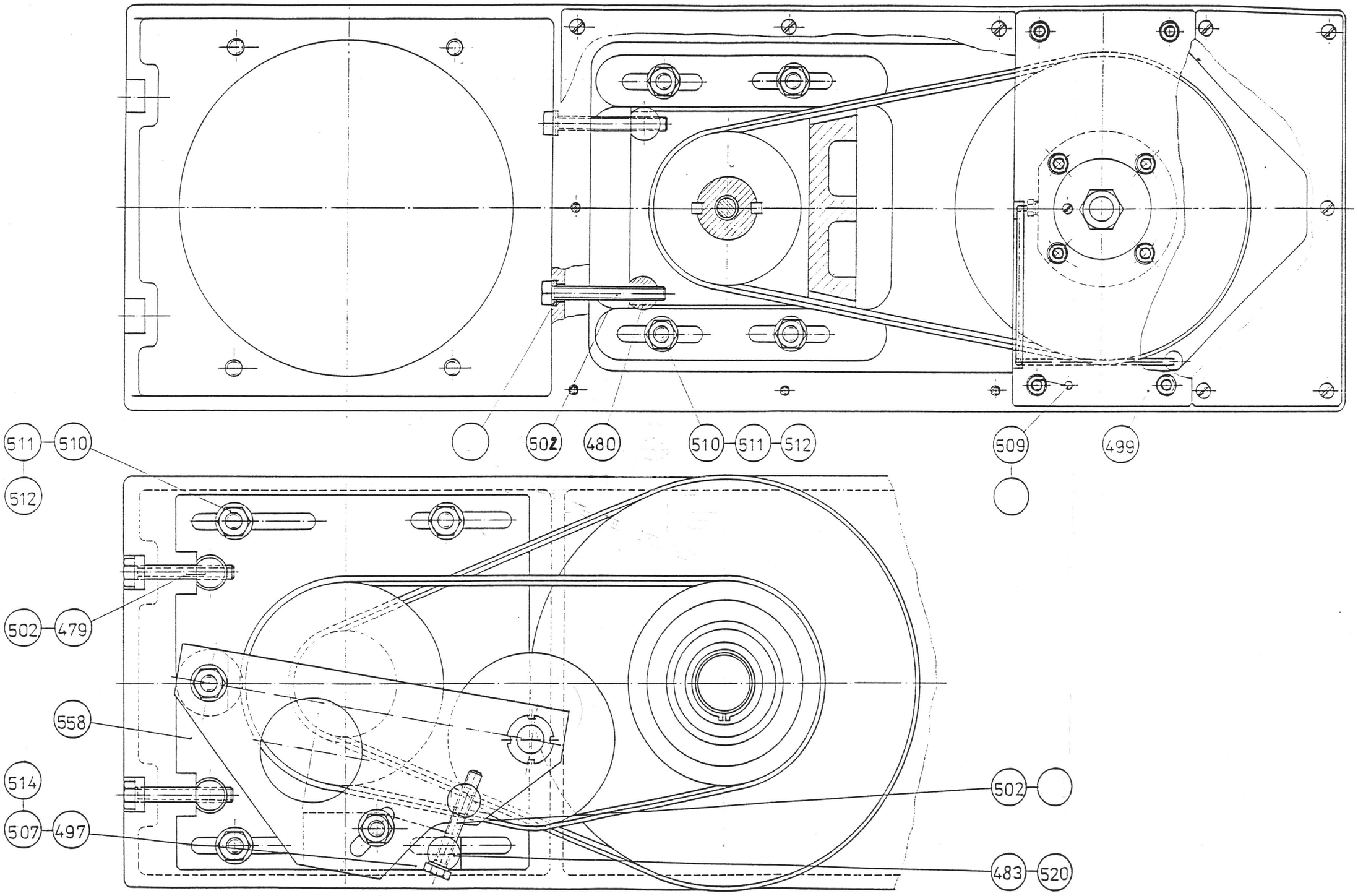

SPINDLE DRIVE 2 SPEED
DIAGRAM # 11/2.01
3 - 28

12. SPEED CHANGE

12.1.01 SPEED CHANGE HAND DIAGRAM # 12/1

ITEM#	NAME	DRAWING/STAND.	DIMENSION	PCS
590	COVER	3 11 07 1784		1
591	SHIFT	4 11 11 2312		1
592	BUSHING	4 11 11 2313		1
593	SHAFT	3 11 11 2314		1
594	HANDLE	4 11 11 2315		1
595	REST	3 11 35 0754.01		1
596	CUBE	3 11 35 0755		1
597	ARRANGE PIN	4 11 67 0984		2
598	BHCS	ČSN 02 1131.2	M5x12	4
599	SHCS	ČSN 02 1143.52	M6x18	1
600	SHCS	ČSN 02 1143.52	M6x60	4
601	SSS	ČSN 02 1181.2	M12x12	1
602	PIN	ČSN 02 2155.2	6x36	1
603	BALL	ČSN 02 3680	10	1
604	BALL	ČSN 02 5181.21	25	1
605	SPRING	4 11 51 0338		1
606	MICROSWITCH	3594-82820 4937 412		1

12.2.02 SPEED CHANGE PNEUMATIC DIAGRAM # 12/2

ITEM#	NAME	DRAWING/STAND.	DIMENSION	PCS
630	FITTING	4 11 11 2327.01		2
631	CYLINDER-BODY	2 11 15 0190.02		1
632	PISTON-ROD	4 11 15 0191		1
633	PISTON	4 11 15 0193.01		1
634	HEAD	4 11 30 0874		1
635	FLANGE	4 11 30 0876		1
636	SHCS	ČSN 02 1143.52	M6x12	4
637	SHCS	ČSN 02 1143.52	M6x20	4
638	FHCS	ČSN 02 1151.2	M6x20	1
639	SSS	ČSN 02 1181.2	M6x6	1
640	LOCK NUT	ČSN 02 3630	KM 1	1
641	LOCK WASHER	ČSN 02 3640	MB 1	1
642	O-RING	ČSN 02 9281.2	34x2	1
643	O-RING	ČSN 02 9281.2	8x2	1
644	SEAL WASHER	ČSN 02 9310.2	10x14	2
645	CAP	ON 02 5611	30	1
646	MICROSWITCH	3594-82820 4937 412		2
647	HOSE CLIP		9	2
648	TURCON GLYD RING	HENNLICH	S 16-020	1
649	SEAL	HENNLICH	K 54-35	1

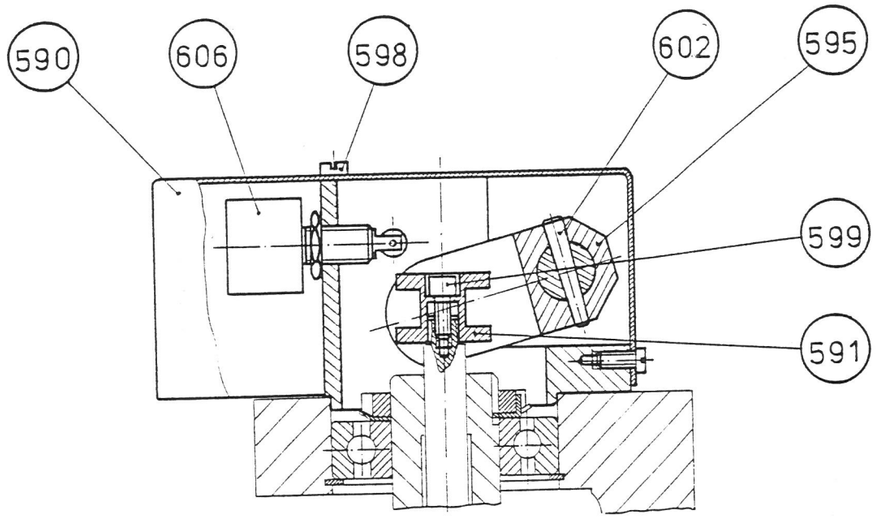

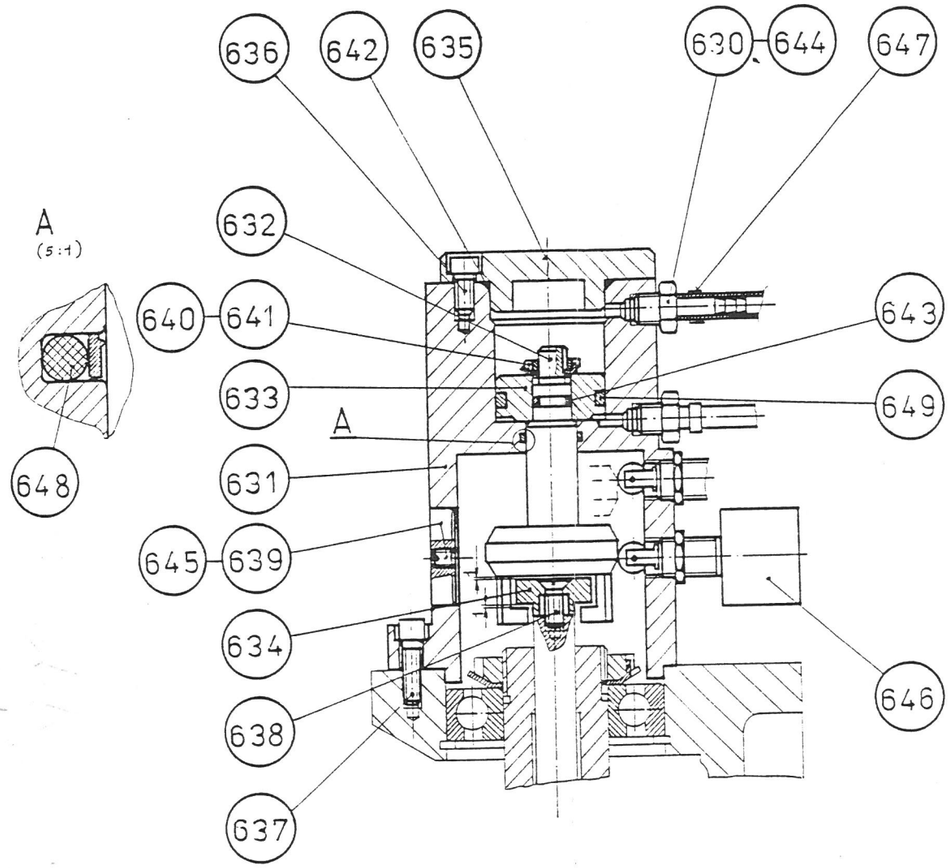

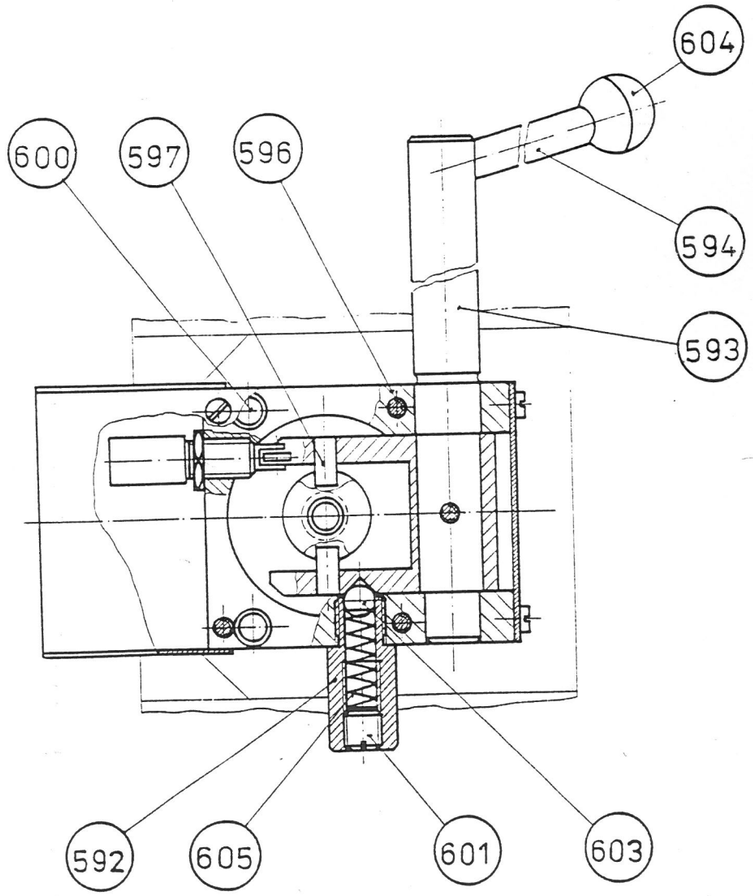

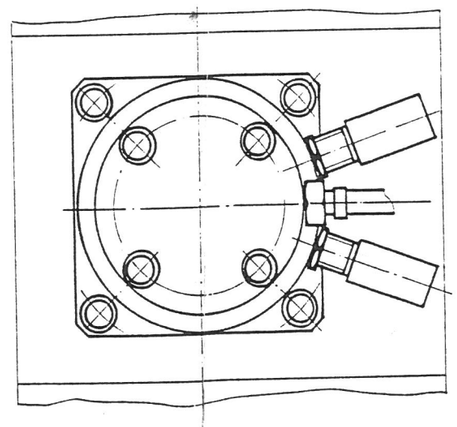

SPEED CHANGER
PNEUMATIC & HAND
DIAGRAM # 12/1,2
3 - 30

13.02 PNEUMATIC FESTO DIAGRAM # 13.01

ITEM#	NAME	DRAWING/STAND.	DIMENSION	PCS
970	MANIFOLD	4 11 35 0773		1
971	MANIFOLD	4 11 35 0774.03		1
972	MALE ELBOW	4 11 35 0775		1
973	SCREW	4 11 41 1115		2
974	HOLDER	4 11 53 5649		2
976	FHCS	ČSN 02 1151.2	M4x8	4
977	SEAL WASHER	ČSN 02 9310.2	10x14	4
978	SEAL FESTO	2223	O-1/8	2
979	SILENCER FESTO	2307	U-1/8	3
980	ELBOW FESTO	3573	E-1/8-1/8	2
981	SOLENOID FESTO	4527	MSFG-24	3
982	COVER FESTO	3 11 07 1956		1
983	PRESSURE SWITCH FESTO	6217	PE-1/8-1N	1
984	VALVE FESTO	7802	MFH-3-1/8	1
985	VALVE FESTO	8820	JMFH-5-1/8	1
986	FRL FESTO	159 604	FRC-1/8 DM	1
987	HOSE FESTO		PUN 8x1.25-6m	1
988	MALE ELBOW FESTO	153 048	QSL-1/8-8	2
989	MALE ELBOW FESTO	153 079	QSLL-1/8-8	1
990	SCREW	ČSN 17 7991	Js 4	3
995	BHCS	ČSN 02 1131.2	M3x6	2
996	BHCS	ČSN 02 1131.2	M4x6	1
997	CABLE CLAMP	ČSN 37 0211	PVJ 10	1
998	RING	ČSN 02 9281.2	12x2	1

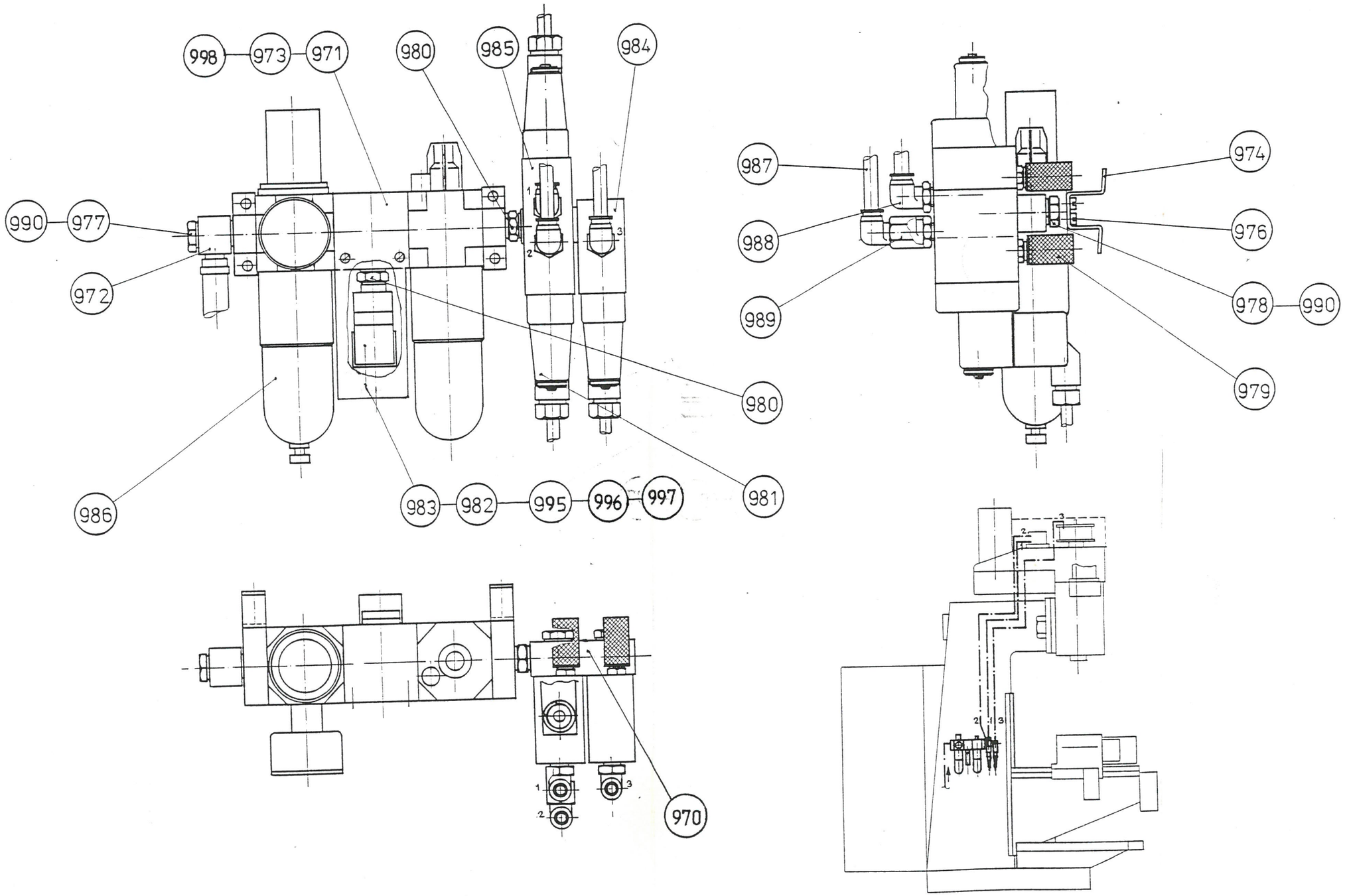

PNEUMATIC FESTO

DIAGRAM # 13.01

3 - 32

1) Up on 2

2) Hold tool unclamp - stroke down, remove HTCS,

3) Unscrew (765) from draw bar,

4) Screw new piece in, up tight, until it won't accept tool, return 1/3 turn, then lock center bolt,

5) Special removal tool should be in drawer by Tree 350.
" installation "

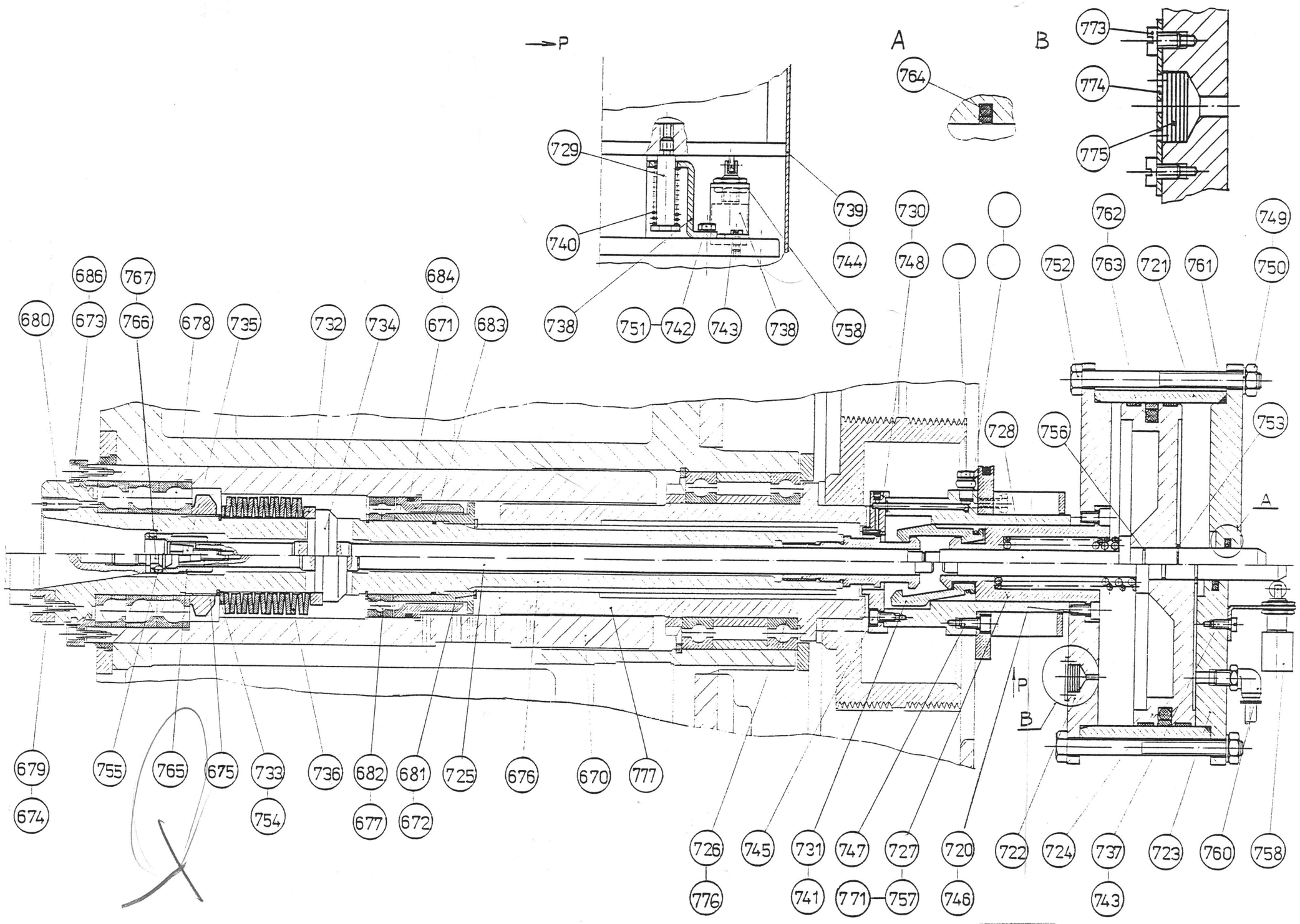

TOOL CLAMP-DRAWBAR
DIAGRAM # 14/1.03
3 - 35

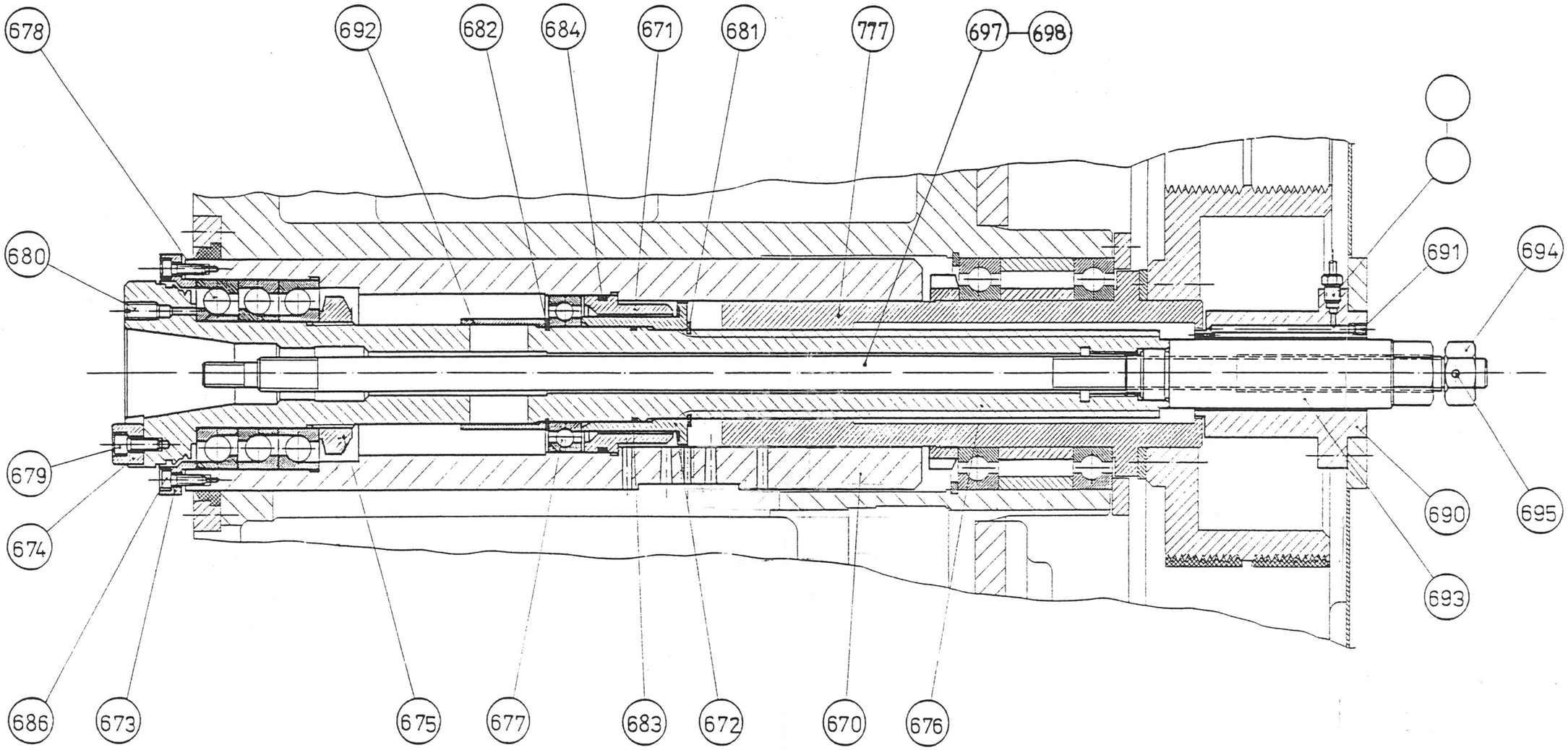

TOOL CLAMP-HAND
DIAGRAM # 14/2.01
3 - 36

15.03 TURNING ARM DIAGRAM # 15.01

ITEM#	NAME	DRAWING/STAND.	DIMENSION	PCS
790	HOLDER	4 11 07 1791		1
791	HOLDER	2 11 09 0687		1
792	RING	4 11 26 2687		1
793	ARM	4 11 30 0569		2
794	NUT	4 11 30 0744		1
795	SCREW	4 11 41 1098		1
796	INSERT	4 11 43 0432		1
797	COVER	4 11 53 5597		2
798	TRUSS	3 11 54 1831.01		1
799	ARRANGE SCREW	4 11 67 0738		1
800	SHCS	ČSN 02 1143.52	M6x12	6
801	SHCS	ČSN 02 1143.52	M8x25	4
802	FHCS	ČSN 02 1151.2	M4x8	4
803	SSCS	ČSN 02 1181.2	M6x5	1
804	SSS	ČSN 02 1183.2	M6x10	1
805	SSS	ČSN 02 1183.2	M8x20	1
806	BALL	ČSN 02 3680	4	40
807	HANDLE	ON 02 5182.1	24.	2
809	SHCS	ČSN 02 1143.52	M6x18	2
860	NUT	ČSN 02 1401.2	M6	2
861	HOLDER	4 11 07 1960		1

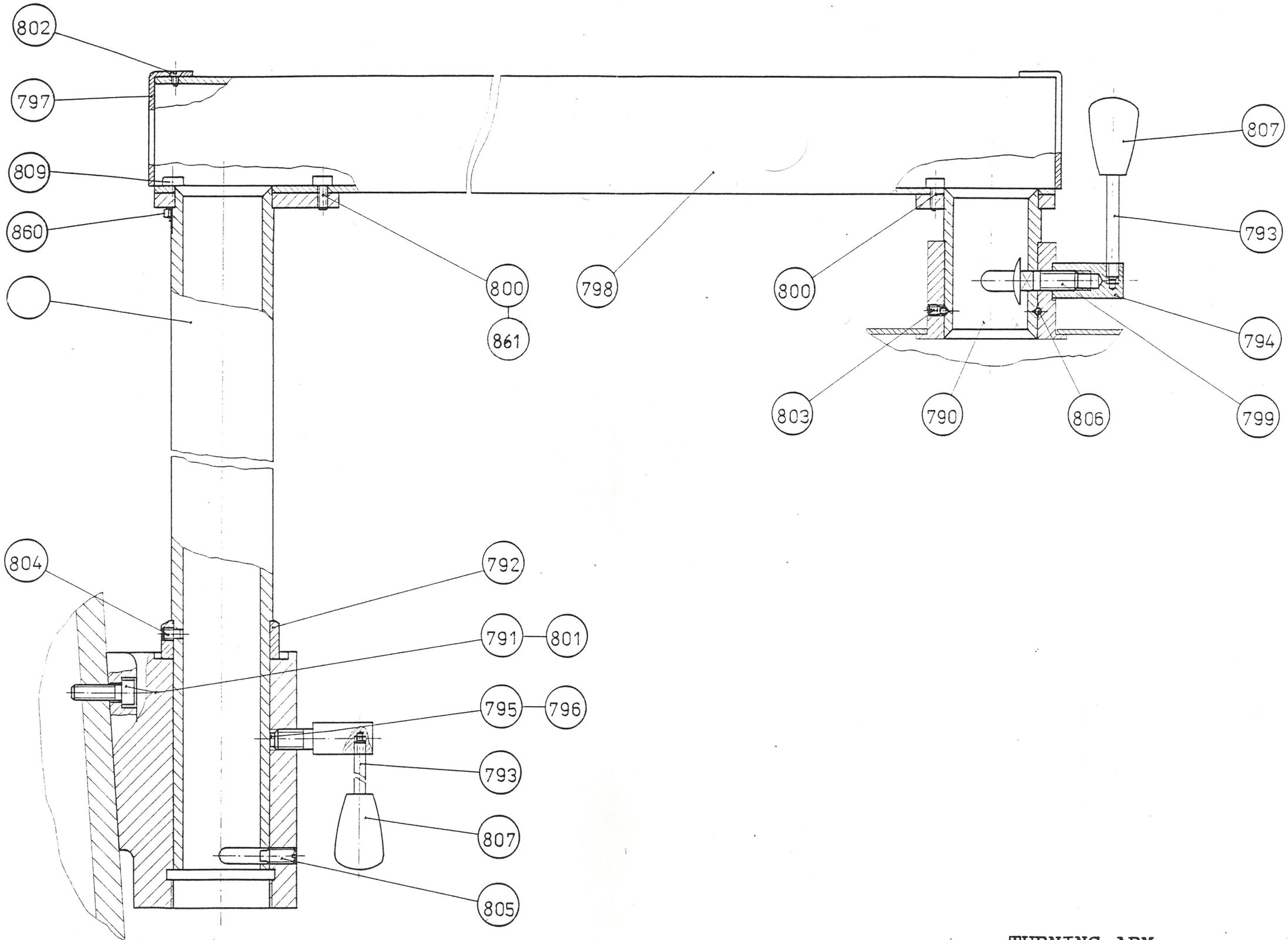

TURNING ARM
DIAGRAM # 15.01
3 - 38

16.05 COLUMN/BASE ASSEMBLY DIAGRAM # 16.03

ITEM#	NAME	DRAWING/STAND.	DIMENSION	PCS
810	BASE	1 11 01 0462		1
811	COLUMN J350 CNC	1 11 01 0489.05		1
812	COVER BASE	3 11 07 1638		1
813	COVER	2 11 07 1751		1
814	SPACING TUBE	4 11 26 2720		1
815	COVER RH	2 11 53 5458		1
816	COVER LH	2 11 53 5459		1
817	SIDE COVER LH	2 11 53 6043		1
818	SIDE COVER RH	2 11 53 6044		1
819	COVER UPPER	3 11 53 6045		1
821	ANGLE-IRON	3 11 54 1843		1
824	BHCS	ČSN 02 1131.2	M5x8	6
825	SHCS	ČSN 02 1143.52	M6x10	2
826	SHCS	ČSN 02 1143.52	M6x14	16
827	SHCS	ČSN 02 1143.52	M16x150	1
828	SHCS	ČSN 02 1143.52	M12x30	5
829	SHCS	ČSN 02 1143.52	M20x120	1
830	SHCS	ČSN 02 1143.52	M20x130	6
831	SHCS	ČSN 02 1143.52	M12x20	1
833	FHCS	ČSN 02 1151.2	M4x6	4
834	NUT	ČSN 02 1401.2	M12	2
836	NUT	ČSN 02 1401.2	M6	4
837	WASHER	ČSN 02 1702.1	B13	7
838	WASHER	ČSN 02 1701.2	B21	7
840	CAP	ON 02 5610	110	1
850	CHIP TANK	2 11 07 1952		1
852	DOWEL PIN	ČSN 02 2150.2	6x20	1
854	COVER	ONP 02 5611	60	2
855	SCREW	ČSN 02 1181.2	M8x8	2
856	WASHER	ČSN 02 1702.1	6,4	4
857	WASHER	ČSN 02 1702.1	B17	1
858	PLUG	ČSN 30 1399.1	60	1

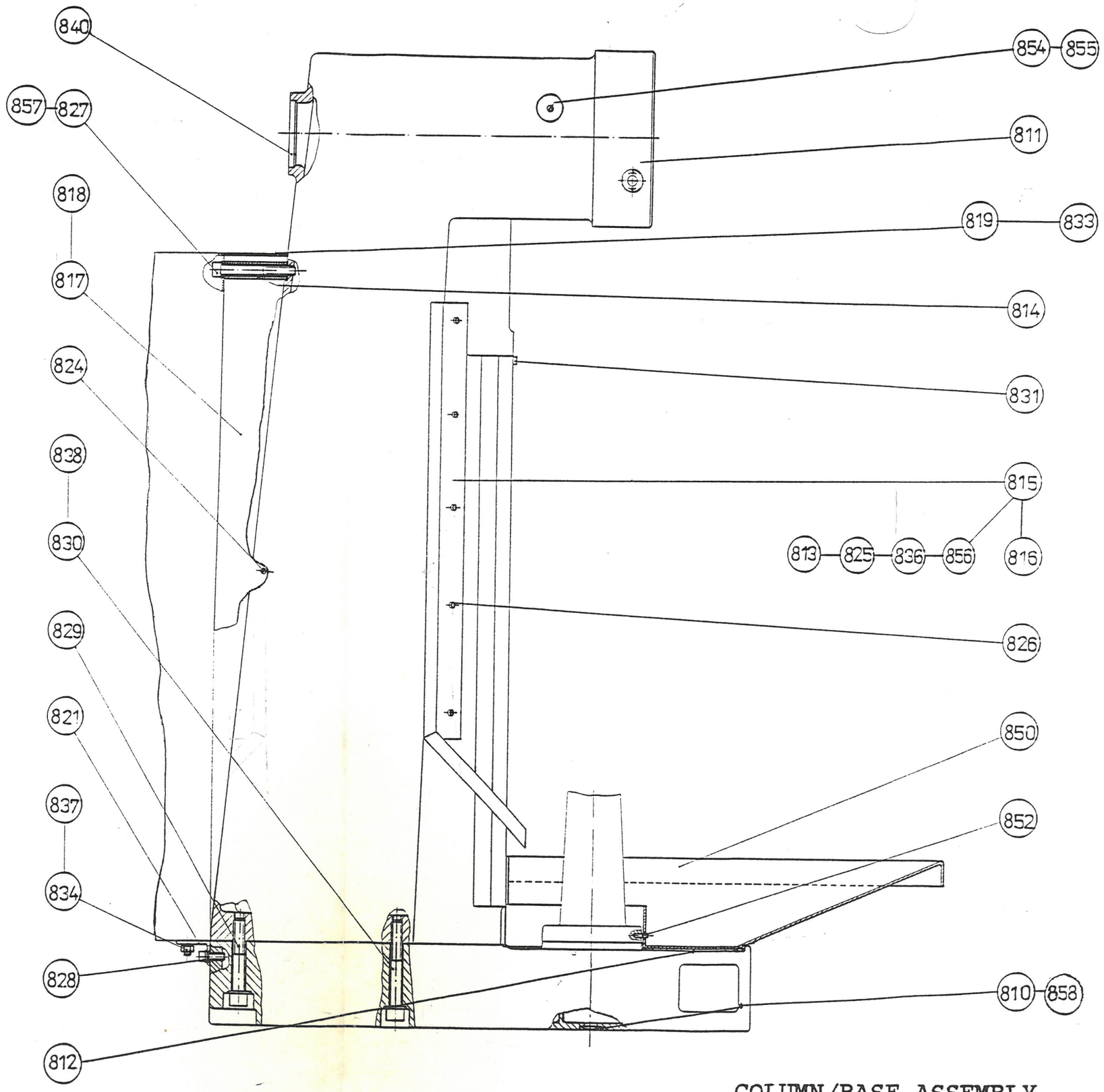

COLUMN/BASE ASSEMBLY
DIAGRAM # 16.03

17.02 INCLINED HEADSTOCK DIAGRAM # 17.01

ITEM#	NAME	DRAWING/STAND.	DIMENSION	PCS
122	GREAS SCREW	ČSN 13 7993	Js3	1
123	GREAS FITTING	ČSN 13 7972	Js2,5	1
124	SEAL WASHER	ČSN 02 9310.2	8x12	2
870	WORM FLANGE	3 11 18 0683		1
871	SCREW	4 11 41 1105		1
872	SCREW	ČSN 02 1124	M16x120	3
873	SHCS	ČSN 02 1143.52	M6x18	4
874	NUT	ČSN 02 1401.2	M16	3
875	WASHER	ČSN 02 1702.1	B17	4
876	DOWEL PIN	ČSN 02 2150.2	8x25	1
880	INCLINED WORM	3 11 18 0684.03		1
881	BUSHING WORM	4 11 24 0231.01		2
882	SSS	ČSN 02 1183.2	M8x20	2
883	AXIAL BALL BEARING	ČSN 02 4730	51202	2
884	TAPER DOWEL PIN	ČSN 02 2155.2	10x55	2
885	TUBE	4 11 56 1282		1
886	HOSE		6x1-1,500	1
887	NUT	4 11 42 0424		1
888	FITTING	4 11 07 1986		1
889	SSS	ČSN 02 1183.2	M5x8	1

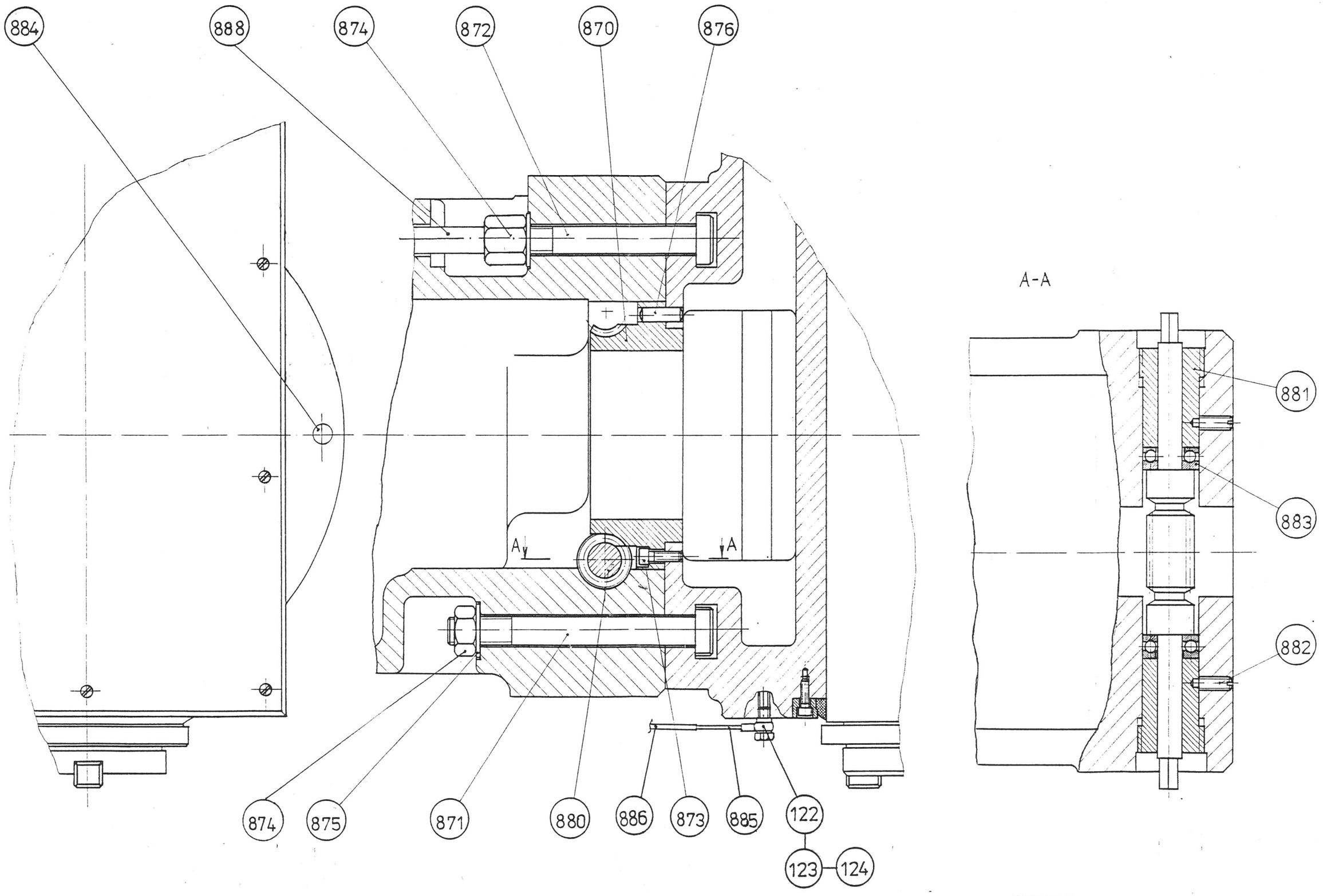

INCLINED HEADSTOCK
DIAGRAM # 17.01

18.02 COVER WORKING AREA DIAGRAM # 18.01

ITEM#	NAME	DRAWING/STAND.	DIMENSION	PCS
900	COVER	3 11 07 1799.01		1
901	STOP	4 11 11 2320		5
902	GIB	3 11 34 3557.02		1
903	SIDE RH	3 11 53 5619.01		1
904	SIDE LH	3 11 53 5620.01		1
906	SHCS	ČSN 02 1143.52	M10x25	2
907	SHCS	ČSN 02 1143.52	M5x30	9
908	FHCS	ČSN 02 1151.2	M5x12	20
909	NUT	ČSN 02 1401.2	M5	5
910	HELI.SPRING LOCK WASHER	ČSN 02 1740.0	10	2
911	HELI.SPRING LOCK WASHER	ČSN 02 1740.0	5	5
912	HANDLE	ON 02 5182.21	32	2
913	SHEET-METAL	3 11 53 5684		1
914	GIB	3 11 34 3631		1
915	SEALING		6x15-0,200	1

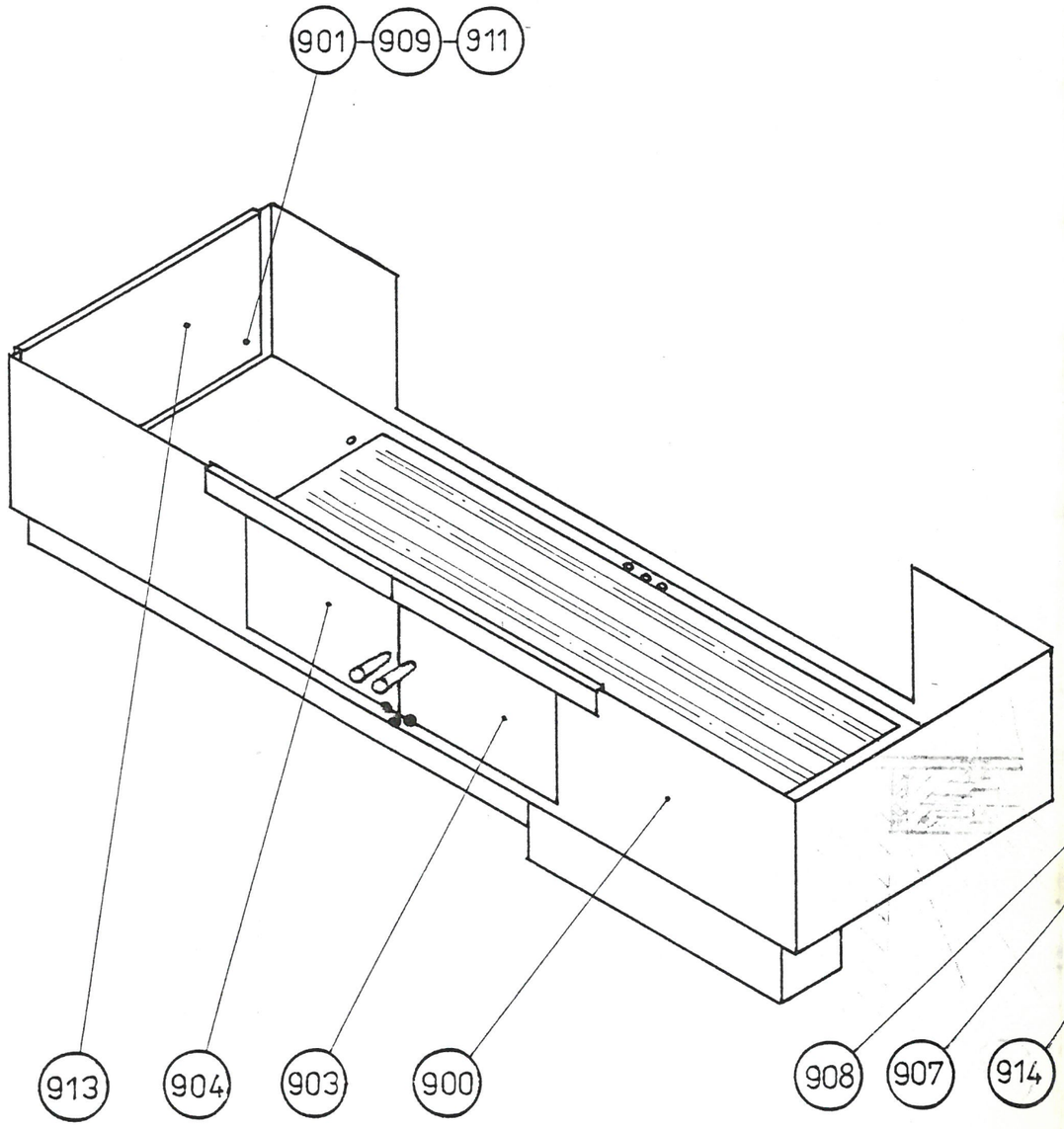

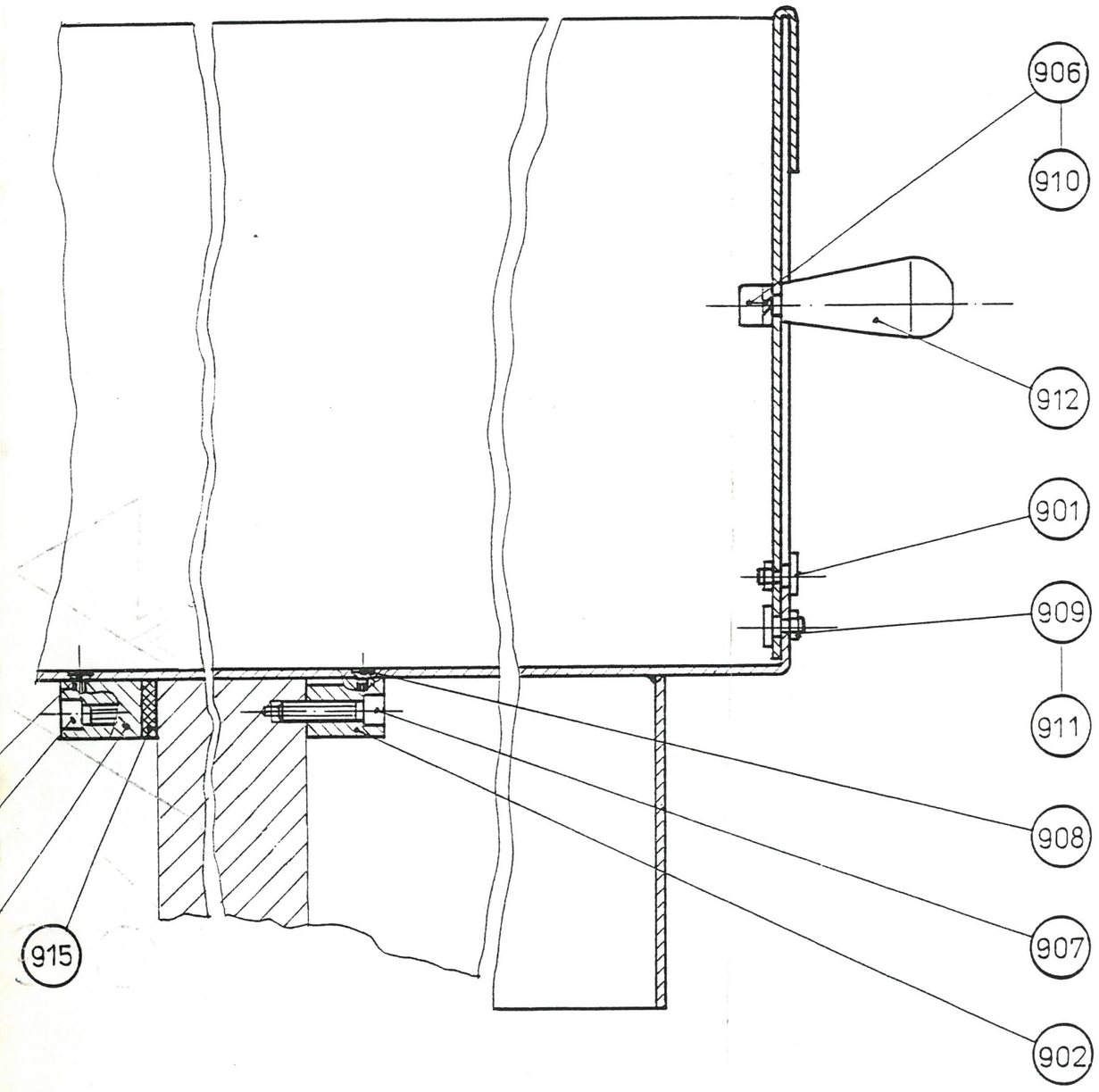

COVER WORKING AREA
DIAGRAM # 18.01
3 - 44

19.04 POWER KNEE OPTION DIAGRAM # 19.02

ITEM#	NAME	DRAWING/STAND.	DIMENSION	PCS
920	KNEE ELEVATING CRANK	2 11 05 0508.01		1
921	HOLDER DRIVE MOTOR	2 11 07 1800.01		1
923	SHAFT	4 11 11 2323		1
926	CHAIN WHEEL	3 11 18 0727		1
930	RING	4 11 26 2727		1
934	PLATE DRIVE MOTOR	3 11 34 3756		1
935	SAFETY	4 11 35 0781.01		1
937	SPRING	4 11 51 0290		1
938	SPRING	4 11 51 0319		1
939	COVER	3 11 53 5626		1
942	BHCS	ČSN 02 1131.2	M5x8	4
943	SHCS	ČSN 02 1143.52	M5x16	1
945	SHCS	ČSN 02 1143.52	M8x16	4
946	SHCS	ČSN 02 1143.52	M8x25	4
948	FHCS	ČSN 02 1176.2	M8x20	4
949	SSS	ČSN 02 1185.2	M5x8	1
950	NUT	ČSN 02 1401.2	M8	4
951	WASHER	ČSN 02 1702.1	8.4	4
952	DOWEL PIN	ČSN 02 2150.2	4x16	1
960	KNEE MOTOR	4 AP 80-6	IM 3681	1
961	CHAIN	ČSN 02 3311.2	086-1 59pcs.	1
962	TRIP DOG	4 11 34 3604		1
963	TRIP DOG	4 11 34 3597.01		1
964	SWITCH LIMIT AND HOME	3 11 07 1659		1
966	RHCS	ČSN 02 1151.2	M5x45	4
967	CHAIN COUPLER		1/2"-3/16"	1
992	MICROSWITCH		N4937-461	2
993	SHCS	ČSN 02 1143.52	M5x12	4
994	ARRANGE KEY	4 11 67 1151		1

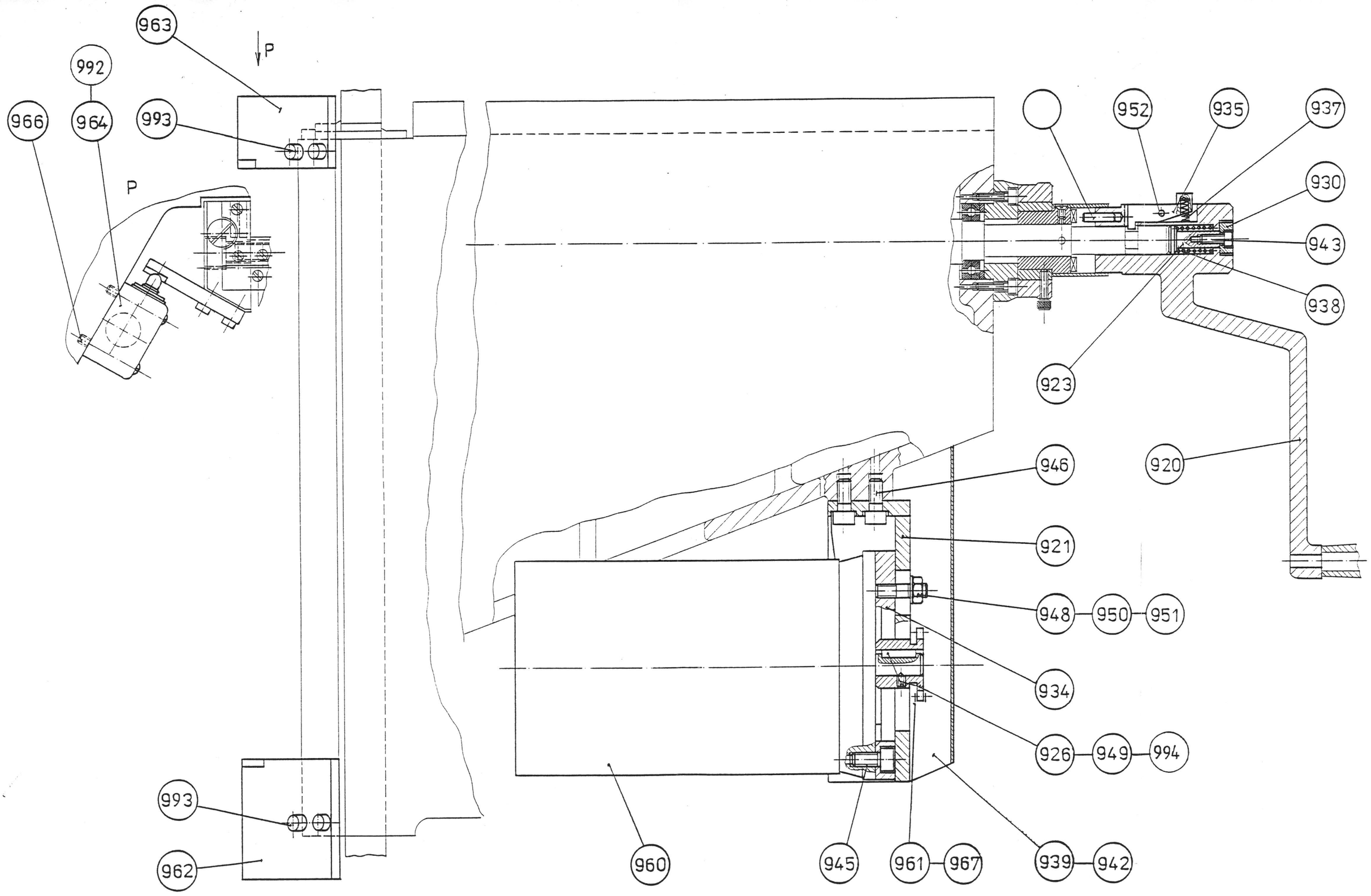

POWER KNEE (OPTION)
DIAGRAM # 19.02

SPARE PARTS

08 (MACHINE # 9-35-95-1061 : 1068) 95-08

IMPORTANT : AT THE ORDER OF SPARE PARTS YOU ALWAYS GIVE LIST ITEM AND # DRAWINGS

ITEM#	NAME	DRAWING/STAND.	CHAP.
001	LONGITUDINAL TABLE	1 11 01 0491.03	1
002	ACROSS TABLE	1 11 01 0487.05	1
003	COVER LEFT	2 11 03 0529.02	1
004	BODY NC NUT "Y"	1 11 03 0576.02	1
005	BEARING LEFT	2 11 03 0559.02	1
006	HOLDER	3 11 07 1758	1
007	GIB HOLDER	3 11 34 3601.01	1
008	BOTTOM GIB	3 11 34 3489.01	1
009	BOTTOM GIB LH&RH	3 11 34 3490.01	1
010	SIDE GIB X-AXIS	2 11 34 3491.02	1
013	CAP	4 11 53 5228	1
014	SHET-METAL	3 11 53 5229	1
015	SHET-METAL	3 11 53 5230	1
016	CAP	3 11 53 5607	1
017	SEAL	3 11 58 0984	1
018	ARRANGE WIPERS	4 11 67 1059	1
019	ARRANGE WIPERS	4 11 67 1060	1
020	ARRANGE WIPERS	4 11 67 1061	1
021	ARRANGE WIPERS	4 11 67 1062	1
022	ARRANGE WIPERS	4 11 67 1063	1
023	ARRANGE WIPERS	4 11 67 1064	1
024	ARRANGE WIPERS	4 11 67 1065	1
025	ARRANGE WIPERS	4 11 67 1070	1
026	ARRANGE WIPERS	4 11 67 1066	1
027	ARRANGE WIPERS	4 11 67 1067	1
028	ARRANGE WIPERS	4 11 67 1068	1
047	ARRANGE WIPERS	4 11 67 1069	1
048	PLATE	4 11 53 5739	1
049	RUBBER COVER	4 11 58 1044	1
051	LONGITUDINAL TABLE "W"	1 11 01 0486.03	1
060	SCREW	4 11 41 1131	1
061	PLATE	2 11 53 5855	1
062	PLATE	2 11 53 5856	1
091	COVER	3 11 07 1657	2
127	OIL CUP RESERVOIR	3 11 35 0782	2
128	COVER	4 11 53 5686	2
129	ARRANGE PIN	4 11 67 1122	2
151	KNEE	1 11 01 0488.05	3
152	KNEE ELEVATING CRANK	2 11 05 0514	3
153	COVER	4 11 53 5721	3
158	RETAINING RING	4 11 26 2531	3
159	RING	4 11 26 2703	3
160	GIB	3 11 53 6116	3
161	GIB	3 11 53 6117	3
162	GIB VERTICAL BACK	3 11 34 3401.01	3
163	KEEPER PLATE LH	2 11 34 3403.02	3
164	GIB VERTICAL SIDE	3 11 34 3540.01	3
165	KEEPER PLATE RH	2 11 34 3541.03	3
167	SCREW	4 11 41 1169	3
170	CAP	4 11 53 5594	3
171	TUBE	4 11 56 0711	3
172	ARRANGE WIPERS	4 11 67 1056	3
173	ARRANGE WIPERS	4 11 67 1128	3
174	ARRANGE WIPERS	4 11 67 1058	3
175	ARRANGE WIPERS	3 11 67 1055	3

ITEM#	NAME	DRAWING/STAND.	CHAP.
177	ARRANGE HANDLE	4 11 67 0950	3
207	STAND	1 11 03 0531	3
210	DIAL RING "M"	4 11 28 0319	3
211	KNEE ELEVATING SCREW"M"	3 11 38 0473	3
212	KNEE ELEVATING NUT "M"	3 11 38 0474	3
213	BEVEL GEAR "M"	3 11 18 0710	3
214	BEVEL GEAR "M"	3 11 18 0711	3
215	DIAL RING "W"	4 11 28 0320	3
216	KNEE ELEVATING SCREW"W"	3 11 38 0475	3
217	KNEE ELEVATING NUT "W"	3 11 38 0476	3
218	BEVEL GEAR "W"	3 11 18 0712	3
219	BEVEL GEAR "W"	3 11 18 0713	3
220	LEVER	4 11 30 0569	3
221	SCREW	4 11 41 1118	3
222	SPRING	4 11 51 0297	3
224	CAP	4 11 54 1883	3
226	ARRANGE SCREW	4 11 67 1145	3
227	ARRANGE PIN	4 11 67 1122	3
228	SCREW	4 11 41 1170	3
229	WASHER	4 11 21 0796	3
231	COVER	4 11 53 5686	3
232	MANIFOLD	4 11 34 3748	4
233	HOSE COOLANT FITTING	4 11 41 1049	4
234	VALVE	4 11 60 2107.01	4
246	HOSE COOLANT FITTING	4 11 41 1085	4
249	NUT	4 11 42 0387	4
250	NEEDLE	4 11 07 1658	4
251	GRIP	4 11 52 0188	4
256	PLUG	4 11 30 0856	4
257	PLUG	4 11 42 0419	4
271	HOLDER	3 11 34 3527.01	5
272	TRIP DOG	3 11 34 3533	5,6
273	TRIP DOG	3 11 34 3574	5,6
293	HOLDER	3 11 54 1854.01	6
311	TRIP DOG	4 11 34 3739	7
312	TRIP DOG	4 11 34 3738	7
313	HOLDER	4 11 53 5688.01	7
314	MOUTING BAR	4 11 54 1959	7
315	MOUTING BRACKET	4 11 54 1879.01	7
330	X-AXIS MOT.MOUT.BRACKET	1 11 03 0554.04	8
331	TIMING PULLEY	4 11 16 1460.01	8,9,10
332	FLANGE	4 11 21 0728	8
333	DISTANCE TUBE	4 11 26 2667	8
334	SEAL	4 11 26 2670	8
335	NUT	4 11 42 0401	8,9,10
336	COVER FRONT	3 11 53 5595	8
337	GASKET	3 11 58 1011	8
338	GASKET	3 11 58 1028	8
352	KEY	4 11 33 0126	8,9,10
361	PULLEY DRIVE	3 11 16 1461.02	8,9,10
362	RING	4 11 26 2723	8,9,10
364	PLATE DRIVE MOTOR	3 11 34 3503.01	8,9,10

ITEM#	NAME	DRAWING/STAND.	CHAP.
380	Y-AXIS MOT.MOUT.BRACKET	1 11 03 0552.02	9
382	FLANGE	4 11 21 0727	9
383	HOLDER OF COVER	4 11 24 0247	9
385	FLANGE	4 11 26 2668.01	9
386	COVER FRONT	2 11 53 5405	9
387	GASKET	3 11 58 1027	9
395	BALLSCREW ACROSS COVER	3 11 07 1845	9
398	COVER BALDOR DRIVE	3 11 07 1830	9
402	COVER	4 11 53 6114	9
420	MOUT.BRACKET BEARINGS	3 11 21 0725	10
421	BEARING FLANGE	3 11 21 0802	10
422	BODY FLANGE	4 11 21 0729	10
433	CUBE	1 11 35 0732.01	10
435	STOP	4 11 11 2283	10
471	TIMING PULLEY CASTING	1 11 03 0568.05	11
472	TOP BEARING HOUSING	2 11 03 0569.02	11
473	PULLEY COVER	4 11 07 1930	11
474	PULLEY	2 11 09 0698.02	11
475	PULLEY	2 11 09 0721.02	11
476	PULLEY	3 11 09 0720.01	11
477	PULLEY	3 11 09 0701.03	11
478	TIGHT PULLEY	4 11 09 0704.01	11
479	PIN	4 11 11 2304	11
480	PIN	4 11 11 2305	11
481	TIGHT PIN	4 11 11 2306	11
482	PIN	4 11 11 2307	11
483	PIN	4 11 11 2308	11
484	BAR	3 11 11 2309	11
485	PIN	4 11 11 2310.01	11
486	CLUTCH	3 11 16 1458	11
487	CLUTCH	3 11 16 1459.01	11
488	SHAFT	2 11 19 0208.03	11
489	RING V.	4 11 26 2855	11
490	RING	4 11 26 2707	11
491	RING	4 11 26 2708.01	11
492	RING	4 11 26 2861	11
493	RING	4 11 26 2710.01	11
494	RING VI.	4 11 26 2856	11
495	RING II.	4 11 26 2852.01	11
496	HOLDER	4 11 34 3534	11
497	HOLDER FOR TIGHT	4 11 34 3535	11
498	SEGMENT	3 11 34 3536.01	11
499	CAP	3 11 34 3538.02	11
500	ARRANGE SPRING	4 11 67 0989	11
501	SHAFT	4 11 11 2412	11
540	DRIVE	2 11 09 0685.02	11
541	QUIL SEAL RETAIN.RING	3 11 21 0730.01	11
542	FLANGE NC	3 11 21 0731.01	11
543	ARRANGE LOCK NUT	4 11 67 1112	11
544	RING NC	4 11 26 2711	11
545	BODY NC HEAD	1 11 01 0485.03	11
553	PRESSURE INSERT	4 11 43 0435	11
558	PLATE	2 11 06 0831.01	11
559	PULLEY	2 11 09 0727.02	11
560	FLANGE	4 11 26 2860	11

ITEM#	NAME	DRAWING/STAND.	CHAP.
562	FAN HOLDER	4 11 53 5669	11
572	COVER	3 11 53 5417.01	11
573	ARRANGE BELT	4 11 67 1134	11
574	DIAL RING	4 11 26 2755	11
575	RING III.	4 11 26 2853	11
576	RING IV.	4 11 26 2854	11
577	RING VII.	4 11 26 2857	11
578	RING VIII.	4 11 26 2858	11
581	RING	4 11 26 2907	11
582	RING NC	4 11 26 2850	11
583	RING I.	4 11 26 2851	11
590	COVER	3 11 07 1784	12.1
591	SHIFT	4 11 11 2312	12.1
592	BUSHING	4 11 11 2313	12.1
593	SHAFT	3 11 11 2314	12.1
594	HANDLE	4 11 11 2315	12.1
595	REST	3 11 35 0754.01	12.1
596	CUBE	3 11 35 0755	12.1
597	ARRANGE PIN	4 11 67 0984	12.1
605	SPRING	4 11 51 0338	12.1
630	FITTING	4 11 11 2327.01	12.2
631	CYLINDER-BODY	2 11 15 0190.02	12.2
632	PISTON-ROD	4 11 15 0191	12.2
633	PISTON	4 11 15 0193.01	12.2
634	HEAD	4 11 30 0874	12.2
635	FLANGE	4 11 30 0876	12.2
670	QUILL	1 11 10 0319.02	14.1,14.2
671	BUSHING	4 11 24 0239.01	14.1,14.2
672	BUSHING	4 11 24 0240.01	14.1,14.2
673	FLANGE	3 11 26 2555.04	14.1,14.2
674	SPINDLE DRIVE KEY	4 11 35 0666.01	14.1,14.2
676	SPINDLE	1 11 10 0323.02	14.1,14.2
690	SHAFT	3 11 09 0703	14.2
692	COVER	4 11 24 0245	14.2
693	NUT	4 11 42 0406	14.2
694	HEAD SCREW 32/44	4 11 67 0640	14.2
697	TOOL RETENTION KNOB´M´	4 11 41 1102	14.2
698	TOOL RETENTION KNOB´W´	4 11 41 1103	14.2
720	BODY	3 11 09 0714	14.1
721	CYLINDER	3 11 09 0716	14.1
722	FLANGE	2 11 09 0717.02	14.1
723	CAP	2 11 09 0718.02	14.1
724	PISTON	3 11 09 0719	14.1
725	BAR	3 11 11 2329.01	14.1
726	BUSHING	4 11 11 2330.01	14.1
727	BUSHING	3 11 11 2331.01	14.1
728	MANDREL	3 11 11 2333	14.1
729	SHAFT	4 11 11 2334	14.1
730	FLANGE	4 11 21 0741.01	14.1
731	COLLET	2 11 25 0190	14.1
732	RING FOR FINISH	4 11 26 2734.01	14.1
733	RING	4 11 26 2735	14.1
734	KEY	4 11 33 0122.02	14.1

ITEM#	NAME	DRAWING/STAND.	CHAP.
735	ARRANGE SCREW	4 11 67 1024	14.1
736	BELLEVILL.SPRING WASHER	4 11 51 0378.01	14.1
737	HOLDER OF MICROSWITCH	4 11 53 5662	14.1
738	HOLDER	4 11 53 5673	14.1
739	COVER	3 11 07 1928	14.1
740	ARRANGE SPRING	4 11 67 1118	14.1
741	ARRANGE SPRING GUFERA	4 11 67 1015	14.1
757	SPRING	4 11 51 0357	14.1
765	HOLDER BALLS	3 11 24 0244	14.1
766	TOOL RETENTION KNOB´M´	3 11 11 2328	14.1
767	TOOL RETENTION KNOB´W´	3 11 11 2335	14.1
768	BRIDGE	3 11 53 5672.01	14.1
771	SPRING	4 11 51 0379	14.1
774	COVER	4 11 53 5697	14.1
775	FILTER	4 11 53 5698	14.1
777	DRIVE	2 11 09 0685.02	14.1,14.2
790	HOLDER	4 11 07 1791	15
791	HOLDER	2 11 09 0687	15
792	RING	4 11 26 2687	15
793	ARM	4 11 30 0569	15
794	NUT	4 11 30 0744	15
795	SCREW	4 11 41 1098	15
796	INSERT	4 11 43 0432	15
797	COVER	4 11 53 5597	15
798	TRUSS	3 11 54 1831.01	15
799	SCREW	4 11 67 0738	15
861	HOLDER	4 11 07 1960	15
810	BASE	1 11 01 0462	16
811	COLUMN J350 CNC	1 11 01 0489.05	16
812	COVER BASE	3 11 07 1638	16
813	COVER	2 11 07 1751	16
814	SPACING TUBE	4 11 26 2720	16
815	COVER RH	2 11 53 5458	16
816	COVER LH	2 11 53 5459	16
817	SIDE COVER LH	2 11 53 6043	16
818	SIDE COVER RH	2 11 53 6044	16
819	COVER UPPER	3 11 53 6045	16
821	ANGLE-IRON	3 11 54 1843	16
850	CHIP TANK	2 11 07 1952	16
870	WORM FLANGE	3 11 18 0683	17
871	SCREW	4 11 41 1105	17
880	INCLINED WORM	3 11 18 0684.03	17
881	BUSHING WORM	4 11 24 0231.01	17
885	TUBE	4 11 56 1282	17
887	NUT	4 11 42 0424	17
888	FITTING	4 11 07 1986	17
900	COVER	3 11 07 1799.01	18
901	STOP	4 11 11 2320	18
902	GIB	3 11 34 3557.02	18
903	SIDE RH	3 11 53 5619.01	18
904	SIDE LH	3 11 53 5620.01	18
913	SHEET-METAL	3 11 53 5684	18
914	GIB	3 11 34 3631	18

ITEM#	NAME	DRAWING/STAND.	CHAP.
920	KNEE ELEVATING CRANK	2 11 05 0508.01	19
921	HOLDER DRIVE MOTOR	2 11 07 1800.01	19
922	KNEE ELEVATING SHAFT	3 11 11 2322.01	3
923	SHAFT	4 11 11 2323	19
924	PIN	4 11 11 2251	3
925	CHAIN WHEEL	3 11 18 0719	3
926	CHAIN WHEEL	3 11 18 0727	19
927	CLUTCH	4 11 21 0740.01	3
929	RING	4 11 26 2728	3
930	RING	4 11 26 2727	19
931	RING	4 11 26 2752	3
934	PLATE DRIVE MOTOR	3 11 34 3756	19
935	SAFETY	4 11 35 0781.01	19
936	SCREW	4 11 41 1110	3
937	SPRING	4 11 51 0290	19
938	SPRING	4 11 51 0319	19
939	COVER	3 11 53 5626	19
957	FLANGE	3 11 21 0739	3
962	TRIP DOG	4 11 34 3604	19
963	TRIP DOG	4 11 34 3597.01	19
964	SWITCH LIMIT AND HOME	3 11 07 1659	19
970	MANIFOLD	4 11 35 0773	13
971	MANIFOLD	4 11 35 0774.02	13
972	MALE ELBOW	4 11 35 0775	13
973	SCREW	4 11 41 1115	13
974	HOLDER	4 11 53 5649	13
982	COVER FESTO	3 11 07 1956	13
994	ARRANGE KEY	4 11 67 1151	19
1100	DISTANCE RING	4 11 26 2688.01	2
1101	WASHER	4 11 26 2739	2
1102	CAP	4 11 30 0784	2
1103	OIL CUP RESERVOIR	3 11 35 0770.01	2
1104	OIL CUP RESERVOIR	3 11 35 0771.02	2
1105	SCREW	4 11 41 1051.01	2
1106	SCREW	4 11 41 1087.01	2
1107	CONNECTION	4 11 41 1090	2
1108	SEALING	4 11 58 1026	2
1109	ARRANGE NUTS	4 11 67 1010	2
1132	TUBE	4 11 56 1283	2