HYCON LIMITED

Hydraulic Control Technology
CATALOGUE

ISSUE 8

Hycon Limited
Unit K, Bridge Farm
Reading Road, Arborfield
Reading, Berkshire, RG2 9HT

Tel : 0118 976 1616
Fax : 0118 976 1626
email : hydrauliccontrol@aol.com
www.hycon.co.uk

HYCON LIMITED

UNIT K, BRIDGE FARM
READING ROAD, ARBORFIELD
READING
BERKSHIRE
RG2 9HT

TEL 0118 976 1616
FAX 0118 976 1626

Email : hydrauliccontrol@aol.com
www.hycon.co.uk

TEL 0118 976 1616 FAX 0118 976 1626

Inline Circuit and
Flow Control valves

Directional Control Valves

CETOP Valves,
Subplates, Manifolds
& Electric Diverters

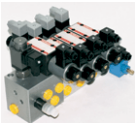

Hand & Foot
operated Pumps

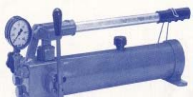

Gear Pumps,
Bell housings
& Drive couplings

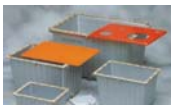

Oil Tanks and Accessories

Filters & Suction Strainers

Commercial Vehicle
Components

Cylinders & Motors

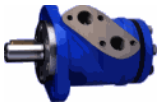

Heat Exchangers

Hose Reels

Orders are despatched up to 4 pm with many delivery options :-

PARCELS UP TO 25 kg
SAME DAY, NEXT DAY BEFORE 10 AM, 12 AM
OR STANDARD 24 HOURS.

SMALLER ITEMS
ROYAL MAIL SPECIAL DELIVERY , RMSD BEFORE
9AM

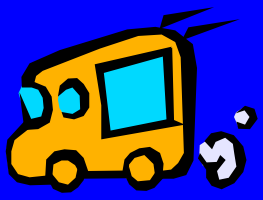

LARGE CONSIGNMENTS QUOTED AS REQUIRED

Table of Contents	Page Number
Pressure Relief Valves	4 - 5
Diverter valves, Manual and Solenoid Operated	6 - 9
Flow Controls and Flow control cartridges	10, 11 & 13
Flow Dividers	12
Sequence Valves & Pressure Reciprocating valves	14
Pressure Switches	14
Inline Check valves & Shuttle valves	15
Hose Burst valves	16. 17
Pilot Operated Check valves	18, 19
Overcentre valves	20
Swivel Under Pressure Couplings,	21
Ball Valves High and Low Pressure	21
Quick Release Couplings	22
Directional Control Valves blb	23-32
Cable Controls	30
Bankable Solenoid Valve KVM	33 - 35
CETOP valves, Solenoid, Oil Pilot and Lever operated	36
CETOP Modular valves, Pilot Check, Overcentre, Flow controls, Pressure switches, etc..	48 - 49
CETOP Subplates and Manifolds	50 - 52
Electric Control Systems & Radio Control Systems	53, 54
Hand Pumps, Industrial	55 - 58
Hand Pumps, Mobile & Cartridge handpump	59 - 61
Gear Pumps, Group 1, 2, 3, 3.5 & 4.	62 - 66
Bearing supports for Gear pumps	66
Flange Elbows for Gear Pumps	67 - 68
Piston Pumps & Cast Iron Gear pumps, Commercial Vehicle Equipment	69
Gear boxes and Pump/gearbox sets, Reduction Gearbox	70
Bell housings and Drive Couplings	71 - 75
Oil Coolers Water / Oil	75
Oil Tanks, Steel & Aluminium	76, 77
Level Gauges and Filler Breathers	78, 79
Suction Strainers	80
Filters, Return and Suction Line, High Pressure Filters	81, 83
High Pressure Filters	83
Cylinders, Micro & Trailer Brake	84
Cylinders, Single Acting	85, 86
Cylinders, Double Acting	87, 88
Cylinders, Top Link	89
Motors, Hydraulic & Direct Motor mounting valves	90 - 93
Power Packs, 12/24 DC, Single & 3 Phase, DIESEL & PETROL Packs	94, 95
Electric Motors	95
Heat Exchangers	96 - 102
Hose Reels	103

TEL 0118 976 1616 FAX 0118 976 1626

PRESSURE RELIEF

MANUFACTURED IN STEEL WITH VARIOUS SPRING SETTINGS, BSP THREAD AND HAND KNOB CONTROL

PRESSURE RELIEF VALVE — INLINE TYPE CP

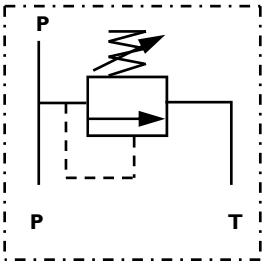

X SPRING	5-90 BAR
U SPRING	100-250 BAR
K SPRING	150-300 BAR

PART NUMBER	THREAD BSP	MAX FLOW L/MIN	MAX PRESSURE BAR
CP 20 14	1/4"	20	300
CP 40 38	3/8"	40	300
CP 40 12	1/2"	40	300
CP 80 12	1/2"	80	300
CP 80 34	3/4"	80	300
CP 150 34	3/4"	150	300
CP 150 10	1"	150	300
1LR350F10W35S* 2 PORTED ALUMINIUM	1 1/4"	350	250

PRESSURE RELIEF VALVE — INLINE TYPE CP / L

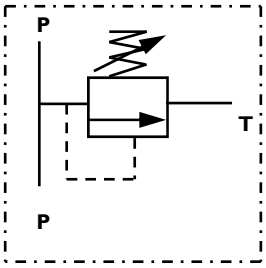

X SPRING	5-90 BAR
U SPRING	100-250 BAR
K SPRING	150-300 BAR

PART NUMBER	THREAD BSP	MAX FLOW L/MIN	MAX PRESSURE BAR
CP/L 40 38	3/8"	40	300
CP/L 40 12	1/2"	40	300
CP/L 80 12	1/2"	80	300
CP/L 80 34	3/4"	80	300
CP/L 150 34	3/4"	150	300
CP/L 150 10	1"	150	300
1LR350F10W35S* 2 PORTED, ALUMINIUM	1 1/4"	350	250

PRESSURE RELIEF VALVE — INLINE TYPE VMDR

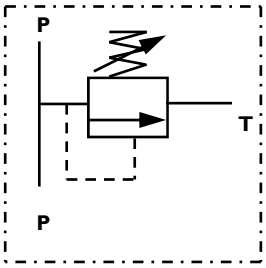

SPRING 1	40 BAR MAX
SPRING 2	100 BAR MAX
SPRING 3	210 BAR MAX

PART NUMBER	THREAD BSP	MAX FLOW L/MIN	MAX PRESSURE BAR
VMDR10140	1/4"	20	210
VMDR10380	3/8"	20	210
VMDR40380	3/8"	40	210
VMDR40120	1/2"	40	210
VMDR80120	1/2"	80	210
VMDR80340	3/4"	80	210
VMDR120340	3/4"	120	210
VMDR120100	1	120	210

TEL 0118 976 1616 FAX 0118 976 1626

back to content page

PRESSURE RELIEF

MANUFACTURED IN STEEL WITH VARIOUS SPRING SETTINGS, BSP THREAD AND HANDKNOB CONTROL OPTION

DUAL RELIEF VALVE — INLINE TYPE CP DI / L

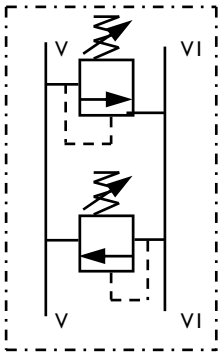

X SPRING	5-90 BAR
U SPRING	100-250 BAR
K SPRING	150-300 BAR

PART NUMBER	THREAD BSP	MAX FLOW L/MIN	MAX PRESSURE BAR
CP DI/L 40 38	3/8"	40	300
CP DI/L 40 12	1/2"	40	300
CP DI/L 80 12	1/2"	80	300
CP DI/L 80 34	3/4"	80	300
CP DI/L 150 34	3/4"	150	300
CP DI/L 150 10	1"	150	300

DUAL RELIEF VALVE — INLINE TYPE CP DI

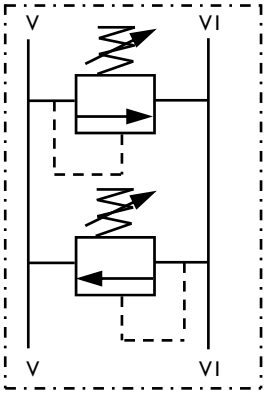

X SPRING	5-90 BAR
U SPRING	100-250 BAR
K SPRING	150-300 BAR

PART NUMBER	THREAD BSP	MAX FLOW L/MIN	MAX PRESSURE BAR
CP DI 40 38	3/8"	40	300
CP DI 40 12	1/2"	40	300
CP DI 80 12	1/2"	80	300
CP DI 80 34	3/4"	80	300
CP DI 150 34	3/4"	150	300
CP DI 150 10	1"	150	300
1LLR350F10W20S* Aluminium body	1 1/4"	380	210

DUAL RELIEF VALVE — INLINE TYPE VBDC

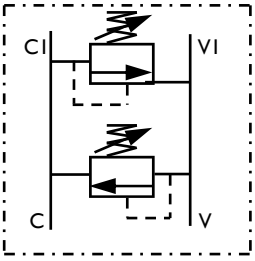

SPRING 1	100 BAR MAX
SPRING 2	210 BAR MAX
SPRING 3	350 BAR MAX

PART NUMBER	THREAD BSP	MAX L/MIN	MAX PRESSURE BAR
VBDC 380	3/8"	40	350
VBDC 120	1/2"	40	350

DIRECT MOTOR MOUNTING RELIEF & OVERCENTRE VALVE — TYPE KP

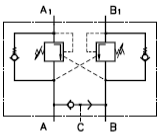

Dual Overcenter Valves with Brake Control

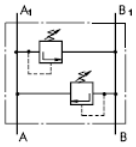

Dual Crossover Relief Valve

Motor Type	Dual Relief	Flow LPM	Pressure Range bar	Overcentre valve With Brake control	Max Flow LPM
MP(EPM) / OMP	KPDR	60	30-100/50-210 80-300	KPBR	60
MR(EPRM)/ OMR	KPDR	60	30-100/50-210 80-300	KPBR	60
MS(EPMS)/OMS	KPDS	60	30-100/50-210 80-300	KPBS	60
MT(EPMT)/OMT	KPDT	120	80-210	KPBT	100
MV(EPMV)/ OMV	KPDV	200	10-100/ 20-250	KPBV	200

TEL 0118 976 1616 FAX 0118 976 1626

back to content page

2 WAY POPPET VALVES

PLUNGER & ELECTRIC SOLENOID OPERATED
1/4" UP TO 11/4" BSP

PLUNGER OPERATED END STROKE VALVE — TYPE FCM

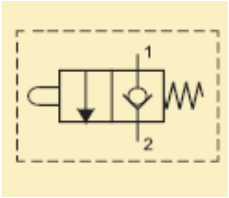

NORMALLY CLOSED	THREAD BSP	MAX FLOW L/MIN	MAX PRESSURE BAR
FCM140 AA	1/4"	40	350
FCM380 AA	3/8"	40	350
FCM120 AA	1/2"	60	300

N.B. The FCM Valve is also available with double check valve in both directions when in the closed position. Please use suffix BB in the code.

2 WAY POPPET — TYPE KV-2/2

N.B. KV Valves are checked in both directions when in closed position

KLADIVAR

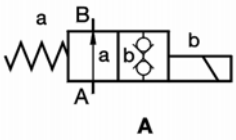

A

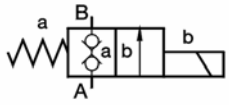

B

PART NUMBER	THREAD BSP	MAX FLOW L/MIN	MAX PRESSURE BAR
KV-2/2-6-S-A-3/8 NORMALLY OPEN	3/8"	50	210
KV-2/2-6-S-B-3/8 NORMALLY CLOSED	3/8"	50	210

2 WAY POPPET — TYPE VAS

N.B. VAS Valves are checked in only one direction when in closed position allowing free flow in the other direction

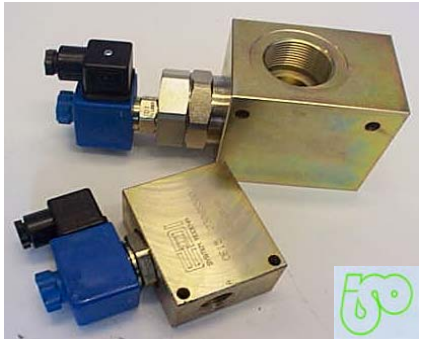

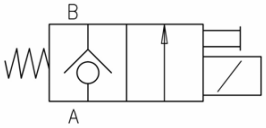

NORMALLY CLOSED

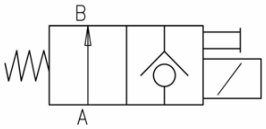

NORMALLY OPEN

N.B. ON VAS 1 1/4" SIZE VALVES THE CLOSED PATH IS B TO A , NOT A TO B !

NORMALLY CLOSED	BSP	FLOW L/MIN	PRESSURE BAR
VAS-NC-14	1/4"	40	320
VAS-NC-38	3/8"	50	320
VAS-NC-12	1/2"	70	320
VAS-NC-34	3/4"	70	320
VAS-NC-100	1"	150	320
VAS-NC-114	1.1/4"	260	350
NORMALLY OPEN	**BSP**	**FLOW L/MIN**	**PRESSURE BAR**
VAS-NA-14	1/4"	40	320
VAS-NA-38	3/8"	50	320
VAS-NA-12	1/2"	70	320
VAS-NA-34	3/4"	70	320
VAS-NA-100	1"	150	320
VAS-NA-114	1.1/4"	260	350

TEL 0118 976 1616 FAX 0118 976 1626

back to content page

3 WAY DIVERTER VALVES

Manual & Electric Operation in 3 Port Configuration,
Various options available including Rotary, Lever, Plunger, Cam & Electric Solenoid operation

3 WAY CAST IRON DIVERTER — 3 WAY TYPE DDF3

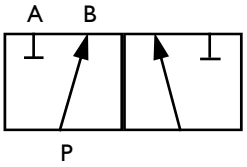

OPEN CENTRE SUPPLIED STANDARD
CLOSED CENTRE OPTION AVAILABLE

PART NUMBER	BSP	L/MIN	BAR
DDF3140A	1/4"	40	300
DDF3380A	3/8"	60	300
DDF3120A	1/2"	90	300
DDF3340A	3/4"	120	300
D3G-10	1"	180	280
D3G-112	1 1/2"	280	250

3 WAY HIGH PRESSURE STEEL DIVERTER — 3 WAY TYPE DDFA3

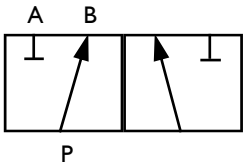

OPEN CENTRE SUPPLIED STANDARD
CLOSED CENTRE OPTION AVAILABLE

PART NUMBER	BSP	L/MIN	BAR
DDFA3140A	1/4"	40	400
DDFA3380A	3/8"	60	400
DDFA3120A	1/2"	90	350
DDFA3340A	3/4"	120	350
DDFA3100A	1"	180	350

3 WAY CAM / LEVER OPERATED DIVERTER — TYPE DTG

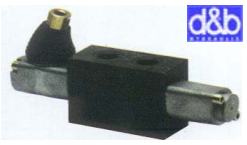

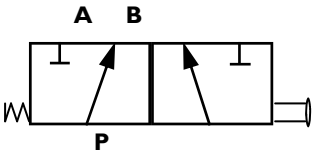

OTHER SPOOL OPTIONS AVAILABLE

SPRING OR DETENT OPTIONS

PART NUMBER	THREAD BSP	OPERATION	MAX FLOW L/MIN	MAX PRESSURE BAR
DTG-38 MOA	3/8"	LEVER	50	250
DTG-12 MOA	1/2"	LEVER	80	250
DTG-38 DOPA	3/8"	CAM	50	250
DTG-12 DOPA	1/2"	CAM	80	250

3 WAY SOLENOID OPERATED DIVERTERS — TYPE KVC-3/2

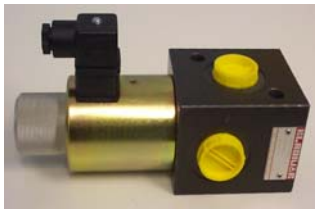

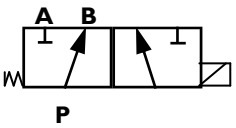

Available in all DC & AC Voltages

PART NUMBER	THREAD BSP	MAX FLOW L/MIN	MAX PRESSURE BAR
KVC-3/2-10-38	3/8"	50	210
KVC-3/2-10-12	1/2"	60	210
KVC-3/2-10-34	3/4"	80	210

KLADIVAR

TEL 0118 976 1616 FAX 0118 976 1626

back to content page

4,6 & 8 WAY MANUAL DIVERTERS

Manual 4, 6 & 8 Way Valves Rotary and Lever operation

4 WAY ROTARY DIVERTER — 4 WAY TYPE IDF4

OPEN CENTRE 'B'

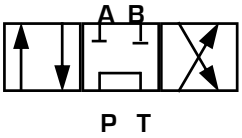

CLOSED CENTRE 'A'

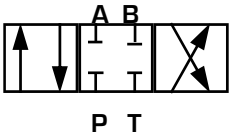

PART NUMBER	BSP	TYPE	L/MIN	BAR
IDF4140B	1/4"	OPEN CENTRE	40	300
IDF4140A	1/4"	CLOSED CENTRE	40	300
IDF4380B	3/8"	OPEN CENTRE	60	300
IDF4380A	3/8"	CLOSED CENTRE	60	300
IDF4120B	1/2"	OPEN CENTRE	90	300
IDF4120A	1/2"	CLOSED CENTRE	90	300
IDF4340B	3/4"	OPEN CENTRE	120	300
IDF4340A	3/4"	CLOSED CENTRE	120	300
IDF4100B	1"	OPEN CENTRE	200	280
IDF4100A	1"	CLOSED CENTRE	200	280

6 & 8 WAY ROTARY DIVERTER — 6 WAY TYPE DDF6 / 8 WAY TYPE DDF8

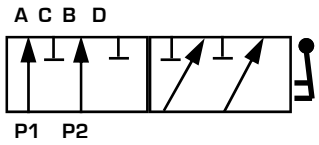

6 PORT DIVERTER DDF6
CLOSED CENTRE AVAILABLE

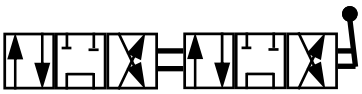

8 PORT DIVERTER DDF8
CLOSED CENTRE OPTION AVAILABLE

PART NUMBER	BSP	L/MIN	BAR
DDF6140A	1/4"	60 + 60	300
DDF6380A	3/8"	60 + 60	300
DDF6120A	1/2"	90 + 90	300
DDF6340A	3/4"	120 + 120	300
DDF6100A	1"	200 + 200	280
DDF8140A	1/4"	40 +40	300
DDF8380A	3/8"	60 + 60	300
DDF8120A	1/2"	90 + 90	300
DDF8340A	3/4"	120 + 120	300

6 WAY LEVER OPERATED SPRING OR DETENT CONTROL — TYPE KV-6/2-R(RA)

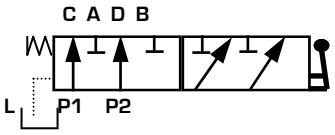

AVAILABLE SPRING RETURN
OR DETENT CONTROL

SPRING RETURN CONTROL	BSP	L/MIN	MAX PRESSURE BAR (WITH DRAIN LINE)
KV-6/2-6-R-3/8"	3/8"	60	160 (350 L)
KV-6/2-6-R-1/2"	1/2"	60	160 (350 L)
KV-6/2-10-R-1/2"	1/2"	120	160 (350 L)
KV-6/2-10-R-3/4"	3/4"	120	160 (350 L)

KLADIVAR

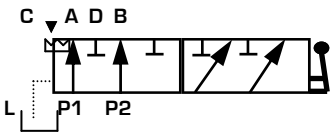

AVAILABLE SPRING RETURN
OR DETENT CONTROL

DETENT CONTROL	BSP	L/MIN	MAX PRESSURE BAR (WITH DRAIN LINE)
KV-6/2-6-RA-3/8"	3/8"	60	160 (350)
KV-6/2-6-RA-1/2"	1/2"	60	160 (350)
KV-6/2-10-RA-1/2"	1/2"	120	160 (350)
KV-6/2-10-RA-3/4"	3/4"	120	160 (350)

TEL 0118 976 1616 FAX 0118 976 1626

back to content page

6 & 8 WAY SOLENOID OPERATED CHANGEOVER VALVES

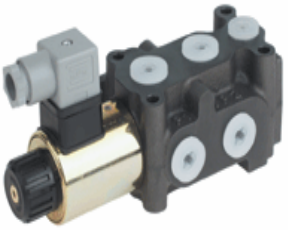

6 & 8 WAY SOLENOID OPERATED DIVERTERS
3/8" 50 LPM UP TO 1" 250 LPM

6 PORT ELECTRIC DIVERTER 50 LPM KVH-6/2-

KLADIVAR

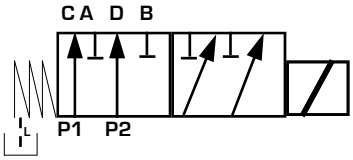

PART NUMBER	THREAD BSP	MAX FLOW L/MIN	MAX PRESSURE BAR
KVH-6/2-6-38	3/8"	50	210 (315 L)
KVH-6/2-6-12	1/2"	50	210 (315 L)

6 PORT ELECTRIC DIVERTER 80 LPM KV-6/2-10

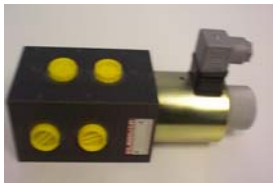

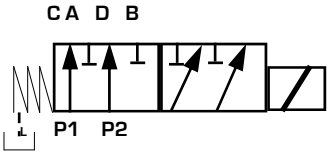

PART NUMBER	THREAD BSP	MAX FLOW L/MIN	MAX PRESSURE BAR
KVH-6/2-10-12	1/2"	80	210 (315 L)
KVH-6/2-10-34	3/4"	80	210 (315 L)

6 PORT ELECTRIC DIVERTER 250 LPM KV-6/2-16

PART NUMBER	TYPE	THREAD BSP	MAX FLOW L/MIN	MAX PRESSURE BAR
KV-6/2-16-N	INTERNAL PILOT LINES	1" SAE	250	350
KV-6/2-16-XN	EXTERNAL DRAIN LINE	1" SAE	250	350

KLADIVAR

N.B. 1" SAE FLANGE ADAPTORS ARE SUPPLIED WITH VALVE

8 PORT ELECTRIC DIVERTER 50 LPM & 80 LPM KV-8/2

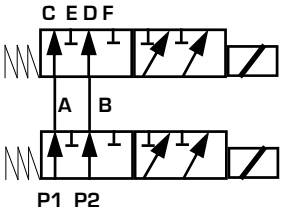

PART NUMBER	THREAD BSP	MAX FLOW L/MIN	MAX PRESSURE BAR
KV-8/2-6-38	3/8"	50	210 (315 L)
KV-8/2-6-12	1/2"	50	210(315 L)
KV-8/2-10-12	1/2"	80	210 (315 L)

KLADIVAR

6 PORT VALVES CAN BE BANKED TOGETHER TO GIVE MULTIPLE FUNCTIONS

SPECIAL APPLICATION DIVERTER VALVES AVAILABLE.....

ELECTRIC DIVERTERS c/w SERVICE RELIEF, P.O. CHECK, 10 PORT, ETC, ETC

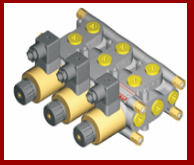

TEL 0118 976 1616 FAX 0118 976 1626

back to content page

FLOW CONTROL VALVES

BARREL TYPE THROTTLE RESTRICTOR VALVES, NEEDLE & SPEED CONTROL VALVES & PRESSURE COMPENSATED FLOW CONTROLS

BARREL TYPE THROTTLE VALVE — TYPE VBRF / VURF

VBRF

Flow Adjustment in both directions

VURF

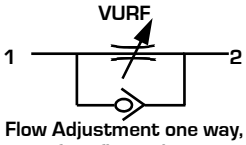

Flow Adjustment one way, free flow other

PART NUMBER	THREAD BSP	MAX FLOW L/MIN	MAX PRESSURE BAR
VBRF140	1/4"	15	350
VBRF380	3/8"	30	350
VBRF120	1/2"	45	350
VBRF340	3/4"	85	300
VURF140	1/4"	15	350
VURF380	3/8"	30	350
VURF120	1/2"	45	350
VURF340	3/4"	85	300

NEEDLE & SPEED CONTROL VALVES — TYPE VRFB / VRFU

VRFB New Code = STB

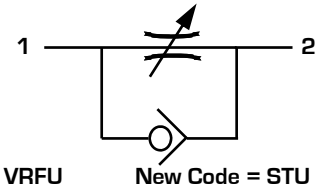

VRFU New Code = STU

NEEDLE VALVES	THREAD BSP	MAX FLOW L/MIN	MAX PR. BAR
VRFB(STB)180	1/8"	10	400
VRFB(STB)140	1/4"	15	400
VRFB(STB)380	3/8"	30	400
VRFB(STB)120	1/2"	50	400
VRFB(STB)340	3/4"	80	400
SPEED CONTROL	**THREAD BSP**	**MAX FLOW L/MIN**	**MAX PR. BAR**
VRFU(STU)180	1/8"	10	400
VRFU(STU)140	1/4"	15	400
VRFU(STU)380	3/8"	30	400
VRFU(STU)120	1/2"	50	400
VRFU(STU)340	3/4"	80	400

PRESSURE COMPENSATED SPEED CONTROL VALVES — TYPE VRC

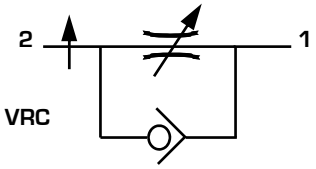

VRC

PRESSURE COMPENSATED SPEED CONTROL	THREAD BSP	MAX FLOW L/MIN	MAX PRESSURE BAR
VRC140	1/4"	10-	250
VRC380	3/8"	18	250
VRC120	1/2"	33	250

PRESSURE COMPENSATED NEEDLE & SPEED CONTROL — TYPE TVD-6

SUITABLE FOR PRECISE ADJUSTMENT WITH LOWER FLOW RATES

KLADIVAR

TYPE NV

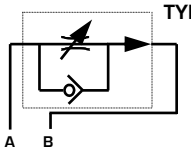

STD

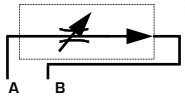

STANDARD

PART NUMBER	SUBPLATE BSP	MAX FLOW L/MIN	MAX PRESSURE BAR
TVD-6-0.9	3/8"	0.9	100
TVD-6-2	3/8"	2	100
TVD-6-4	3/8"	4	100
TVD-6-8	3/8"	8	315
TVD-6-16	3/8"	16	315

KEY LOCKABLE KNOB OR FPM SEALS AVAILABLE

TEL 0118 976 1616 FAX 0118 976 1626

back to content page

PRIORITY FLOW CONTROLS

PRIORITY ADJUSTABLE FLOW CONTROL VALVES, MANUAL OR PROPORTIONAL SOLENOID OPERATED FLOW DIVIDER / COMBINER VALVES

PRIORITY ADJUSTABLE / PRESSURE COMPENSATED — TYPE RFP

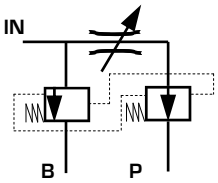

PART NUMBER WITHOUT RELIEF	THREAD BSP	MAX FLOW L/MIN	MAX PRESS. BAR
RF40 P	3/8" & 1/2"	50	250
RF 70 P	1/2" & 3/4"	90	250

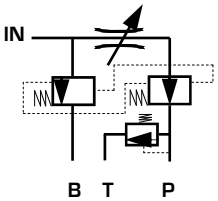

PART NUMBER WITH PRESSURE RELIEF VALVE	THREAD BSP	MAX FLOW L/MIN (MAX.PRIORITY FLOW)	MAX PRESS. BAR
RF40 PV	3/8" & 1/2"	50	250
RF70 PV	1/2" & 3/4"	90	250

PRIORITY ADJUSTABLE, PRESSURE COMPENSATED MANUAL OR PROPORTIONAL SOLENOID OPERATED — TYPE TVTP-B

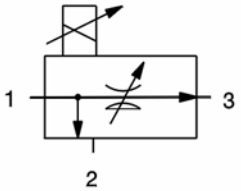

MANUAL OPTION	THREAD BSP	MAX INLET FLOW L/MIN	MAX PRIORITY FLOW L/MIN	MAX PRESSURE BAR
TVTP25B50	1/2"	60	25	350
TVTP50B50	1/2"	90	50	350
TVTP90B90	1"	150	90	350

PROPORTIONAL SOLENOID OPERATED, PRESSURE COMPENSATED INTEGRATED AMPLIFIER 12 OR 24 VOLT DC — TYPE TVTP-P

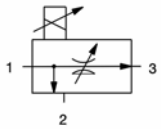

KLADIVAR

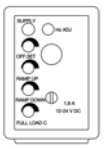

PROPORTIONAL SOLENOID OPERATED FLOW CONTROL	THREAD BSP	MAX INLET FLOW L/MIN	MAX PRIORITY FLOW L/MIN	MAX PRESSURE BAR
TVTP25-P-50-R59	1/2"	60	25	210
TVTP50-P-50-R59	1/2"	90	50	210
TVTP90 -P-90-R59	1"	150	90	210

PRIORITY ADJUSTABLE, P. COMPENSATED, 350 bar — TYPE TVTC

For Precise Adjustment within required Flow Rate
Options with Relief Valve, Non Return valve or Both

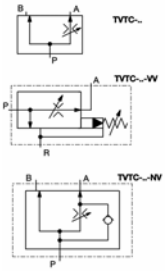

KLADIVAR

PART NUMBER	THREAD BSP	MAX INLET FLOW L/MIN	ADJUSTMENT RANGE L/MIN	OPERATING PRESSURE BAR
TVTC-12	1/2" & 3/4" P	32	1 to12	5 TO 350
TVTC-25	1/2" & 3/4" P	65	1 to 25	5 TO 350
TVTC-50	1/2" & 3/4" P	65	1 to 50	5 TO 350

TEL 0118 976 1616 FAX 0118 976 1626

back to content page

PRIORITY FLOW CONTROLS

FLOW DIVIDER / COMBINER VALVES
HIGH PRESSURE FLOW DIVIDER/COMBINER
FIXED PRIORITY VALVES

FLOW DIVIDER/COMBINER 50/50 or 60/40 Split, Pressure Compensated — TYPE VEQ

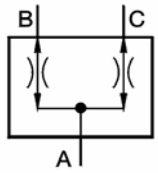

VEQ= CAST BODY

PART NUMBER	THREAD BSP	INLET FLOW LPM	MAX PRESSURE BAR
VEQ-10	3/8"	3-6	250
VEQ-15	3/8"	6-10	250
VEQ-20	3/8"	10-20	250
VEQ-22	3/8"	20-32	250
VEQ-25	1/2"	25-40	250
VEQ-30	1/2"	40-60	250
VEQ-50	1/2"	60-80	250
2CFD1556W100S*	3/4"	33-100	250
2CFD2508W-6W-150S*	1" In, 3/4" Out	52-150	250
2CFD25010W-8W220S*	1 1/4" In, 1" Out	80-220	250

FLOW DIVIDER / COMBINER 50% / 50% 350 BAR, Pressure Compensated — TYPE DTP

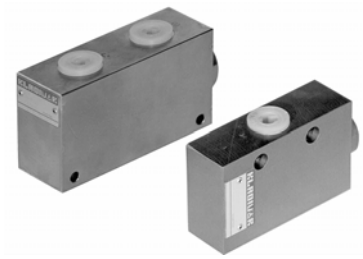

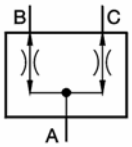

PART NUMBER	THREAD BSP	MAX FLOW LPM	MIN FLOW LPM	MAX PRESSURE BAR
DTP-6-20	3/8"	20	8	350
DTP-6-35	3/8"	35	12	350
DTP-6-50	3/8"	50	16	350
DTP-10-70	1/2"	70	35	350

FIXED FLOW PRIORITY VALVES, Pressure Compensated — TYPE RFP

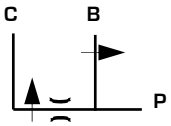

INLET FLOW CAN VARY UP TO 70 LPM MAX & THE PRIORITY FLOW WILL STAY THE SAME.

PART NUMBER	THREAD BSP	FIXED PRIORITY FLOW	MAX PRESSURE BAR
RFP 38 / 3	3/8"& 1/2"	3	250
RFP 38 / 6	3/8"& 1/2"	6	250
RFP 38 / 9	3/8"& 1/2"	9	250
RFP 38 / 12	3/8"& 1/2"	12	250
RFP 38 / 15	3/8"& 1/2"	15	250
RFP 38 / 20	3/8"& 1/2"	20	250
RFP 38 / 25	3/8"& 1/2"	25	250
RFP 38 / 30	3/8"& 1/2"	30	250
RFP 38 / 35	3/8"& 1/2"	35	250
RFP 38 / 40	3/8"& 1/2"	40	250

TEL 0118 976 1616 FAX 0118 976 1626

back to content page

FLOW CONTROL CARTRIDGES

FIXED COMPENSATED FLOW CONTROL CARTRIDGE — TYPE VSC

VSC FIXED COMPENSATED LOAD CONTROL VALVES KEEP THE LOAD DESCENT CONSTANT DESPITE CHANGES IN WORKING PRESSURE OR LOAD VALUE.

VSC140 Orifice dia	Controlled Flow at 100bar +/- 10%	VSC380 Orifice dia	Controlled Flow at 100bar +/- 10%	VSC120 Orifice dia	Controlled Flow at 100bar +/- 10%
0.8	1	1.25	2	2.5	9
1	2	1.5	3	3	12
1.25	3	2	4	3.5	17
1.5	4	2.25	5	4	21
1.75	5	2.5	6	4.5	27
2	6	3	9	5	32
2.5	7	3.5	12	5.5	409
2.75	8	3.75	16	6	47
3	9	4	18		
3.5	10				
3.75	11				
4	12				
5	15				

Cartridge Part No:	THREAD BSP	MAX INLET L/MIN	MAX PRESSURE BAR
VSC-140	1/4"	12	250
VSC-380	3/8"	18	250
VSC-120	1/2"	47	210

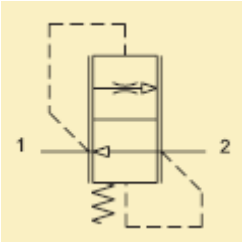

Available in M/M or F/M Body

Housing Size BSP	Male x Female Body Part No:	Female x Female Body Part No:
1/4"	61100031	61100034
3/8"	61100032	61100035
1/2"	61100033	61100036

ORDERING CODE:	SIZE	FLOW (See Table above)
Example :-		
VSC	380	4

ADJUSTABLE COMPENSATED FLOW CONTROL CARTRIDGE — TYPE VRD

VRD ADJUSTABLE COMPENSATED LOAD CONTROL VALVES KEEP THE LOAD DESCENT CONSTANT DESPITE CHANGES IN WORKING PRESSURE OR LOAD VALUE. ADJUSTMENT PERMISSIBLE WITHIN THE SETTING

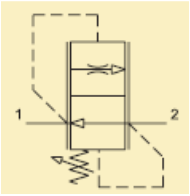

FLOW SETTING	A L/MIN	B L/MIN	C L/MIN	D L/MIN	E L/MIN	F L/MIN
VRD-140	1-1.6	1.5-2.5	2.4-4	3.9-6.3	6.2-10	9.5-15
VRD-380	2-5.4	3.8-6.3	6.1-10	9.8-16	15	24.5-35
VRD-120	16-21	20.5-28	27.5-37	36.5-50	48-65	—
VRD-340	37-50	48-65	63-90	88-120	115-150	—

PART NUMBER	THREAD BSP	MAX FLOW L/MIN	MAX PRESSURE BAR
VRD-140	1/4"	15	300
VRD-380	3/8"	35	300
VRD-120	1/2"	65	300
VRD-340	3/4"	150	300

Available in M/M or F/M Body

Housing Size BSP	Male x Female Body Part No:	Female x Female Body Part No:
1/4"	61100057	61100051
3/8"	61100058	61100052
1/2"	61100059	61100053
3/4"	61100060	61100054

ORDERING CODE:	SIZE	Prefix	Flow Setting Lpm
Example :-			
VRD	120	D	40

TEL 0118 976 1616 FAX 0118 976 1626

back to content page

SEQUENCE VALVES, PRESSURE SWITCHES & PRESSURE RECIPROCATING VALVES

SEQUENCE VALVE — TYPE VSQ & VSL

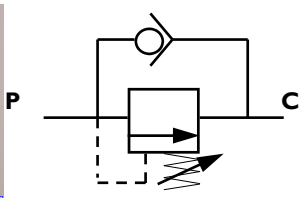

PART NUMBER	THREAD BSP	FLOW L/MIN	MAX PRESSURE BAR
VSL140	1/4"	20	350
VSQ 40 38	3/8"	40	350
VSL380	3/8"	45	350
VSQ 40 12	1/2"	40	350
VSL120	1/2"	45	350
1PS145P6W35S	3/4"	150	350
1PS250P8W35S	1"	250	350

SEQUENCE VALVE — TYPE VSQ/L

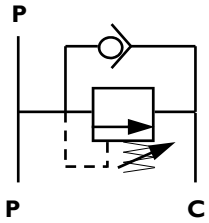

PART NUMBER	THREAD BSP	FLOW L/MIN	MAX PRESSURE BAR
VSQ/L 40 38	3/8"	40	350
VSQ/L 40 12	1/2"	40	350
1PS155P6W35S (External Pilot line)	3/4"	150	250

PRESSURE SWITCHES — TYPE TS-4

PART NUMBER	ADJUSTMENT TYPE	THREAD BSP	SWITCHING RANGE BAR	MAX PRESSURE BAR
TS-4-70-N-A	ALLEN KEY	1/4"	4-70	400
TS-4-70-N-B	ROTARY KNOB	1/4"	4-70	400
TS-4-70-N-C	KEY LOCKABLE ROTARY KNOB	1/4"	4-70	400
TS-4-160-N-A	ALLEN KEY	1/4"	17-160	400
TS-4-160-N-B	ROTARY KNOB	1/4"	17-160	400
TS-4-160-N-C	KEY LOCKABLE ROTARY KNOB	1/4"	17-160	400
TS-4-250-N-A	ALLEN KEY	1/4"	20-250	400
TS-4-250-N-B	ROTARY KNOB	1/4"	20-250	400
TS-250-N-C	KEY LOCKABLE ROTARY KNOB	1/4"	20-250	400
TS-4-400-N-A	ALLEN KEY	1/4"	25-400	400
TS-4-400-N-B	ROTARY KNOB	1/4"	25-400	400
TS-4-400-N-C	KEY LOCKABLE ROTARY KNOB	1/4"	25-400	400

PRESSURE RECIPROCATING VALVE — TYPE PKV

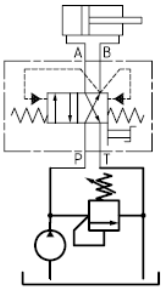

PKV-6-T

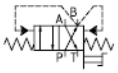

PKV-6-T-G

PART NUMBER	FLOW RATE LPM	PRESSURE ADJUSTMENT RANGE BAR	MAX PRESSURE BAR
PKV-6-T	3 to 30	50-210	210
PKV-6-T-G (Offset spindle for predetermined start position)	3 to 30	50-210	210
PKV-10	65	20-210	210

PKV Valves are Subplate Mounted
Single Station Subplates on pages.... 51 to 52

back to content page

TEL 0118 976 1616 FAX 0118 976 1626

NON RETURN / CHECK VALVES

INLINE NON RETURN CHECK VALVES — TYPE VUR

Standard Check Valves are poppet type

Ball type can be supplied upon request

STANDARD CRACKING PRESSURE 1 BAR

3 BAR & 6 BAR SPRINGS ALSO IN STOCK

PART NUMBER	THREAD BSP	MAX FLOW L/MIN	MAX PRESSURE BAR
VUR180	1/8"	5	400
VUR140	1/4"	15	380
VUR380	3/8"	30	380
VUR120	1/2"	50	350
VUR340	3/4"	90	300
VUR100	1"	150	250
VUR114	1 1/4"	200	250
VUR112	1 1/2"	300	210

ONE WAY FIXED ORIFICE RESTRICTOR — TYPE STF

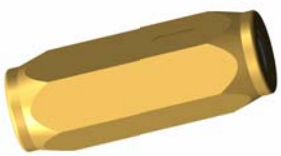

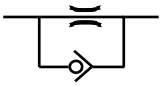

PART NUMBER	STANDARD ORIFICE	THREAD BSP	MAX FLOW L/MIN	MAX PRESSURE BAR
STF 14	1 mm	1/4"	25	350
STF 38	1.25 mm	3/8"	45	350
STF 12	1.5 mm	1/2"	70	350
STF 34	1.75 mm	3/4"	100	350

ONE WAY EMBEDDED RESTRICTOR — TYPE VS

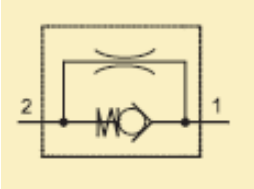

PART NUMBER	RESTRIC-TION TYPE	THREAD BSP	MAX FLOW L/MIN	MAX PRESSURE BAR
VS3802T	2 GAPS	3/8"	35	500
VS3804T	4 GAPS	3/8"	35	500

DISC CHECK VALVES — TYPE VUP

PART NUMBER	THREAD BSP	MAX FLOW L/MIN	MAX PRESSURE BAR
VUP 140	1/4"	20	500
VUP 380	3/8"	35	500
VUP 120	1/2"	60	350

SHUTTLE VALVE — TYPE VSF

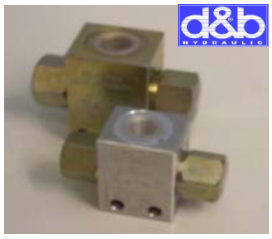

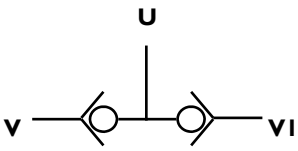

PART NUMBER	THREAD BSP	FLOW L/MIN	PRESSURE BAR
VSF-14 STEEL	1/4"	20	350
VUSF 140 ALUMINIUM	1/4"	20	210
VSF-38 STEEL	3/8"	40	350
VUSF 380 ALUMINIUM	3/8"	40	210
VSF-12 STEEL	1/2"	60	300
VUSF 120 ALUMINIUM	1/2"	80	
VSF-34	3/4"	100	250

TEL 0118 976 1616 FAX 0118 976 1626

back to content page

HOSE BURST VALVES

HOSE BURST VALVES — TYPE HBV / HBC

CARTRIDGE ONLY

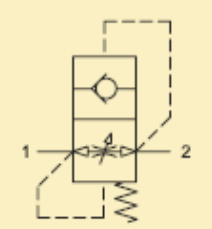

CARTERIDGE PT.NO	THREAD	L/MIN	PRESSURE BAR
HBC-14	1/4"	25	350
HBC-38	3/8"	50	350
HBC-12	1/2"	80	350
HBC-34	3/4"	150	350
HBC-10	1"	200	350
HBC 1215	M12 x 1.5	15	350
HBC 1415	M14 x 1.5	25	350
HBC 1615	M16 x 1.5	50	350
HBC 2215	M22 x 1.5	80	350

COMPLETE WITH BODY

COMPLETE PT.NO	THREAD	L/MIN	PRESSURE BAR
HBV-14 (MF/FF)	1/4"	25	350
HBV-38 (MF/FF)	3/8"	50	350
HBV-12 (MF/FF)	1/2"	80	350
HBV-34 (MF/FF)	3/4"	150	350
HBV-10 (MF/FF)	1"	200	350
HBV 1215 (MF/FF)	M12 x 1.5	15	350
HBV 1415 (MF/FF)	M14 x 1.5	25	350
HBV 1615 (MF/FF)	M16 x 1.5	50	350
HBV 2215 (MF/FF)	M22 x 1.5	80	350

Prefix :-

MF = Male x Female Body

FF = Female x Female Body

HOSE BURST BODIES Male x Female or Female x Female ported

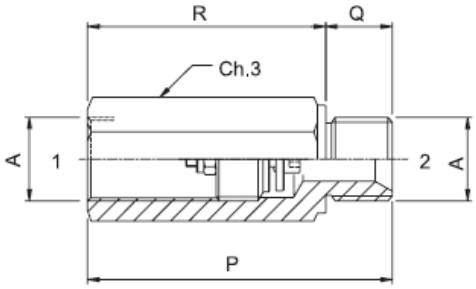

Codice Code	A	R	P	Q	Ch3	Peso Weight Kg
61100087	BSPP 1/4	38	50	12	19	0,07
61100088	BSPP 3/8	45	58	12	25	0,09
61100089	BSPP 1/2	51	65	14	28	0,15
61100090	BSPP 3/4	61	78	17	35	0,23

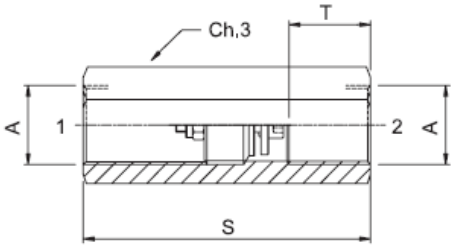

Codice Code	A	S	T	Ch3	Peso Weight Kg
61100092	BSPP 1/4	48	12	19	0,07
61100093	BSPP 3/8	52	12	25	0,09
61100094	BSPP 1/2	60	14	28	0,14
61100095	BSPP 3/4	74	16	35	0,22

TEL 0118 976 1616 FAX 0118 976 1626

back to content page

HOSE BURST VALVES

SETTING CHART

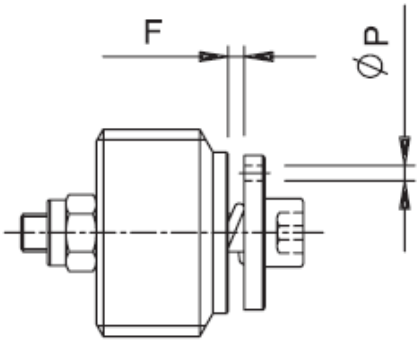

Regolazione F Setting

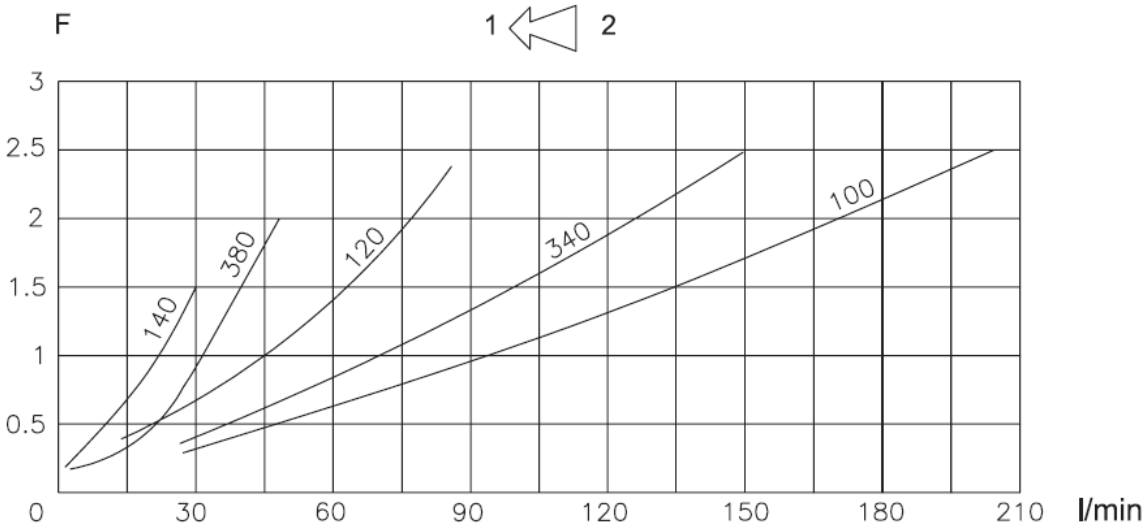

INSERTION TOOL

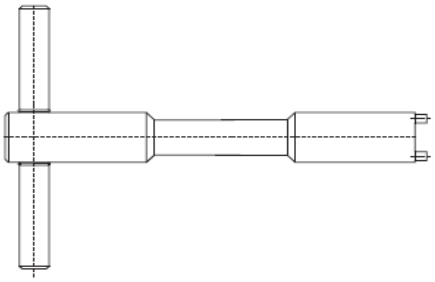

Codice chiave Tool code	Valvola Valve	Peso Weight Kg
61700001	VUBA140	0,12
61700002	VUBA380	0,13
61700003	VUBA120	0,15
61700004	VUBA340	0,13

HOSE BURST VALVES BSP x STEEL TUBE CONNECTION TYPE VUBADIN

PART NUMBER	THREAD BSP	TUBE SIZE	TUBE THREAD	L/MIN	PRES-SURE BAR
VUBA380T10	3/8	10 mm	M16 x 1.5	50	315
VUBA380T12	3/8	12 mm	M18 x 1.5	50	315
VUBA380T15	3/8	15 mm	M22 x 1.5	50	315
VUBA120T15	1/2	15 mm	M22 x 1.5	80	315

TEL 0118 976 1616 FAX 0118 976 1626

back to content page

PILOT OPERATED CHECK VALVES

DUAL PILOT OPERATED CHECK VALVE BARREL TYPE — TYPE VRDP

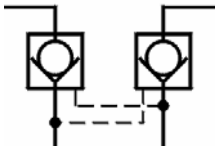

PART NUMBER	THREAD BSP	FLOW L/MIN	MAX PRESSURE BAR	PILOT RATIO
VRDP380	3/8"	35	320	1:4

SINGLE PILOT OPERATED CHECK VALVE EXT. PILOT — TYPE VRPE

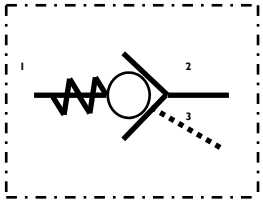

PART NUMBER	THREAD BSP	FLOW L/MIN	MAX PRESSURE BAR	PILOT RATIO
VRPE140	1/4"	25	350	1:5
VRPE380	3/8"	40	350	1:4.4
VRPE120	1/2"	60	350	1:4.2
VRPE340	3/4"	90	300	1:4

INLINE DUAL & SINGLE PILOT OP. CHECK — TYPE VBS/L—VBD/L—VRDL—4CK

VBD / VRDL DUAL

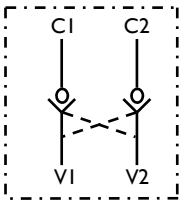

PILOT RATIO 1: 4 (3/4" = 1:3.5)

VARIOUS OTHER PILOT RATIOS AVAILABLE UPON REQUEST

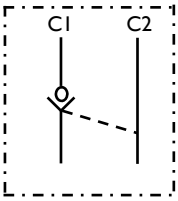

VBS/L SINGLE

PART NUMBER	THREAD BSP	PILOT RATIO	FLOW L/MIN	MAX PRESSURE BAR
VBD/L-14	1/4"	1:4	20	350
VBD/L-38	3/8"	1:4	35	350
VRDL380	3/8"	1:7	35	350
VBD/L-12	1/2"	1:4	50	350
VRDL120	1/2"	1:7	45	350
4CKK9516WS *	3/4"	1:4	90	300
4CKK12516WS *	3/4"	VARIOUS	120	300
4CKK350110WS *	1 1/4"	VARIOUS	300	280

PART NUMBER	THREAD BSP	FLOW L/MIN	MAX PRESSURE BAR
VBS/L-14	1/4"	20	350
VBS/L-38	3/8"	35	350
VBS/L-12	1/2"	50	350
4CK9516WS *	3/4"	90	300
4CK12516WS *	3/4"	120	300
4CK350110WS *	1 1/4"	300	280

*** Aluminium Body**

back to content page

TEL 0118 976 1616 FAX 0118 976 1626

PILOT OPERATED CHECK VALVES

DUAL / SINGLE PILOT OPERATED CHECK VALVE — TYPE VRDE / VRSE

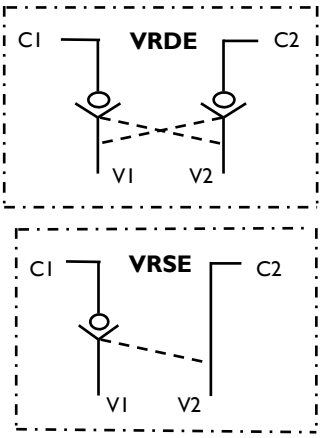

PART NUMBER	THREAD BSP	FLOW L/MIN	PILOT RATIO	PRESSURE BAR
VRDE140	1/4"	15	1:4	320
VRSE140	1/4"	15	1:4	320
VRDE380	3/8"	35	1:4	320
VRSE380	3/8"	35	1:4	320
VRDE120	1/2"	45	1:4	300
VRSE120	1/2"	45	1:4	300
VRDE340	3/4"	70	1:3	300
VRSE340	3/4"	70	1:3	300
A PILOT RATIO OF 1:9 IS AVAILABLE				

DUAL / SINGLE PILOT OPERATED CHECK VALVE TUBE MOUNTED WITH NUT & OLIVE — TYPE VRDD / VRSD

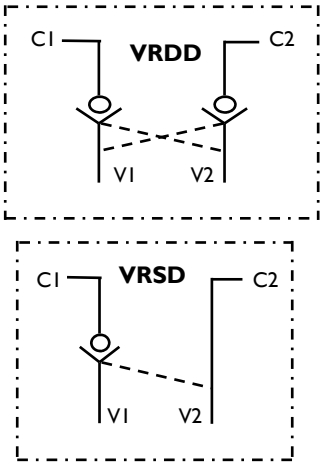

PART NUMBER	V1 / V2 BSP	Dia Tube mm	FLOW L/MIN	PILOT RATIO	PRESSURE BAR
VRDD140T8	1/4"	8	10	1:9	320
VRSD140T8	1/4"	8	10	1:9	320
VRDD140T12	1/4"	12	15	1:4	320
VRSD140T12	1/4"	12	15	1:4	320
VRDD380T12	3/8"	12	35	1:4	320
VRSD380T12	3/8"	12	35	1:4	320

DUAL / SINGLE PILOT OPERATED CHECK VALVE TUBE MOUNTING KIT — TYPE ARDP

Available in two overall lengths
350 mm & 750 mm,
Tube can be cut to required length

PART NUMBER	Thread BSP	Dia Tube mm	FLOW L/MIN	PILOT RATIO	PRESSURE BAR
ARDP6350	3/8"	12	30	1:4	320
ARDP6750	3/8"	12	30	1:4	320

TEL 0118 976 1616 FAX 0118 976 1626

back to content page

OVERCENTRE VALVES

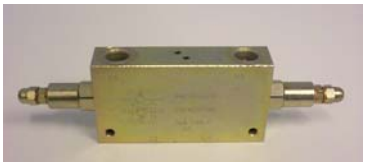

DUAL OVERCENTRE VALVES TYPE OWC-DE/L & VBCD

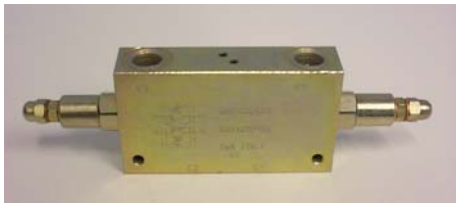

Pressure Settings Available :-

OWC .. U= 60-200 bar
OWC .. K=100-350 bar

VBCD .. 1 = 30-210bar
VBCD .. 2 = 60-350 bar

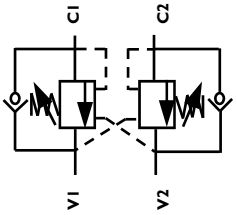

PART NUMBER	THREAD BSP	MAX FLOW L/MIN	MAX PRESSURE BAR	PILOT RATIO
OWC-DE/L 14	1/4"	20	350	4.25 :1
VBCD1402	1/4"	30	350	4.25 : 1
OWC-DE/L 38	3/8"	35	350	4.25 : 1
VBCD380	3/8"	40	350	4.25 : 1
OWC-DE/L 12	1/2"	50	350	4.25 : 1
VBCD120	1/2"	60	350	4.25 : 1
OWC-DE/L 12/7	1/2"	70	350	4.25 : 1
OWC-DE/L 34	3/4"	90	350	4.25 : 1
1CEE350F10W35S3	1 1/4"	300	270	Various

SINGLE OVERCENTRE VALVES TYPE OWC-SE/L & VBCL

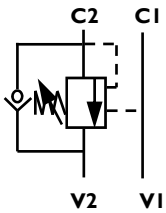

PART NUMBER	THREAD BSP	MAX FLOW L/MIN	MAX PRESSURE BAR	PILOT RATIO
VBCL140	1/4"	30	350	4.25:1
OWC-SE/L 38	3/8"	35	350	4.25:1
VBCL380	3/8"	40	350	4.25:1
OWC-SE/L 12	1/2"	50	350	4.25:1
VBCL120	1/2"	60	350	4.25:1
OWC-SE/L 12/7	1/2"	70	350	4.25:1
OWC-SE/L 34	3/4"	90	350	4.25:1
1CE145F6W20S4	3/4"	140	280	Various
1CE145F8W20S4	1"	140	280	Various
1CE350F10W35S3	1 1/4"	300	270	Various

BANJO MOUNT SINGLE OVERCENTRE VALVE TYPE OWC-SE-C & VBCB

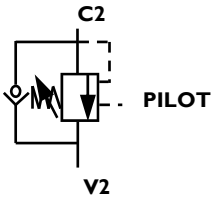

PART NUMBER	THREAD BSP	FLOW L/MIN	PRESSURE BAR	PILOT RATIO
OWC-SE 14	1/4"	20	350	4.25:1
OWC-SE 38 C	3/8"	35	350	4.25:1
VBCB380	3/8"	40	350	4.25:1
OWC-SE 12 C	1/2"	50	350	4.25:1

TEL 0118 976 1616 FAX 0118 976 1626

back to content page

SWIVEL UNDER PRESSURE COUPLINGS & HIGH PRESSURE BALL VALVES

STRAIGHT COUPLINGS — TYPE GGIL

STRAIGHT COUPLING	THREAD	FLOW L/MIN	PRESSURE BAR	MAX PRESSURE OF ROTATION BAR
GGIL 140	1/4"	12	400	200
GGIL 380	3/8"	30	400	200
GGIL 120	1/2"	45	300	150
GGIL 340	3/4"	80	300	150
GGIL 100	1"	140	280	100

90 º ELBOW COUPLINGS — TYPE GG90

90 ELBOW	THREAD	FLOW L/MIN	PRESSURE BAR	MAX PRESSURE OF ROTATION BAR
GG90 140	1/4"	12	400	200
GG90 380	3/8"	30	400	200
GG90 120	1/2"	45	300	150
GG90 340	3/4"	80	300	150
GG90 100	1"	140	280	100

HIGH PRESSURE BALL VALVES — 2 & 3 WAY — TYPE BKH / BK3

2 WAY	THREAD BSP	FLOW L/MIN	PRESSURE BAR
GE2-14	1/4"	25	500
GE2-38	3/8"	35	500
GE2-12	1/2"	60	500
GE2-34	3/4"	100	400
GE2-10	1"	150	350
GE2-114	1 1/4"	180	350
GE2-112	1 1/2"		350
GE2-2	2"		350

3 WAY	THREAD BSP	FLOW L/MIN	PRESSURE BAR
GE3-14	1/4"	25	315
GE3-38	3/8"	35	315
GE3-12	1/2"	60	315
GE3-34	3/4"	100	250
GE3-10	1"	150	250

STAINLESS STEEL VALVES ALSO AVAILABLE...

LOW PRESSURE BALL VALVES — 2 & 3 WAY — TYPE BV2/BV3L/BV3T

2 WAY	3 WAY L PORT	3 WAY T PORT	THREAD	PRESSURE
BV14FF	BV3L14	BV3T14	1/4"	45
BV38FF	BV3L38	BV3T38	3/8"	45
BV12FF	BV3L12	BV3T12	1/2"	45
BV34FF	BV3L34	BV3T34	3/4"	40
BV10FF	BV3L10	BV3T10	1"	40
BV114FF	BV3L114	BV3T114	1 1/4"	30
BV112FF	BV3L112	BV3T112	1 1/2"	30
BV2FF	BV3L2	BV3T2	2"	25
BV3FF			3"	20
BV4FF			4"	20

Male x Female Ported Valves

' T ' handled Valves

Gate Valves

etc, also available...

TEL 0118 976 1616 FAX 0118 976 1626

back to content page

QUICK RELEASE COUPLINGS

ISO 7241 'A' TYPE — TYPE QR A

Part Number	TYPE	THREAD	MAX FLOW LPM	MAX W. P. BAR
QRA04M	MALE	1/4"	5.4	340
QRA04F	FEMALE	1/4"	5.4	340
QRA06M	MALE	3/8"	31	272
QRA06F	FEMALE	3/8"	31	272
QRA08M	MALE	1./2"	46	272
QRA08F	FEMALE	1./2"	46	272
QRA12M	MALE	3/4"	96	272
QRA12F	FEMALE	3/4"	96	272
QRA16M	MALE	1"	156	272
QRA16F	FEMALE	1"	156	272

ISO 16028 FLAT FACED COUPLINGS — TYPE QR FF

Part Number	TYPE	THREAD	MAX FLOW LPM	MAX W. P. BAR
QRFF04M	MALE	1/4"	36	400
QRFF04F	FEMALE	1/4"	36	400
QRFF06M	MALE	3/8"	85	375
QRFF06F	FEMALE	3/8"	85	375
QRFF08M	MALE	1./2"	85	375
QRFF08F	FEMALE	1./2"	85	375
QRFF12M	MALE	3/4"	230	350
QRFF12F	FEMALE	3/4"	230	350
QRFF16M	MALE	1"	300	350
QRFF16F	FEMALE	1"	300	350

TRAILER BRAKE COUPLINGS — TYPE BR

Part No.	TYPE	THREAD	MAX W. P. BAR
BRF6-8	FEMALE	3/8"	220
BRM8-8	MALE	1/2"	220
BRF8-8	FEMALE	1/2"	220
BRM18	MALE	18 mm	220
BRF18	FEMALE	18 mm	220
BRM20(22)	MALE	20 mm(22 mm)	220
BRM-DC	DUST CAP	—	—
BRAN	ANCHOR	—	—

TRACTOR SCREW TYPE COUPLINGS — TYPE ST

Dowty Type	TYPE	THREAD
STDM	MALE	1/2"
STDF	FEMALE	3/8"
DAN	FEMALE ANCHOR	1 3/8" x 12 UNF
DDC	DUST CAP	1 3/8" x 12 UNF

Exactor Type	TYPE	THREAD
STEM	MALE	1/2"
STEF	FEMALE	3/8"
EAN	FEMALE ANCHOR	1 1/4"
EDC	DUST CAP	1 1/4"

Water Couplings
and Stainless Steel couplings
Available in various formats...

TEL 0118 976 1616 FAX 0118 976 1626

back to content page

DIRECTIONAL CONTROL VALVES

Blb Directional Control valves are supplied as standard with Main Relief valve, Lever operation and Spring Return to neutral spool.

The Control valves are available in many different actuations and Controls.
Options include Remote Cable, Joystick Lever and Cable, Air or Oil Pilot, Cam operation, Electric Solenoid and Solenoid and Manual Lever operation,
All spools in Blb valves are ‘ Metered’ to give better control.

MONOBLOCK VALVES

BM Monoblock valve range with Valve sizes of 15 Lpm (1/4”) up to 180 Lpm (1” bsp)

MONOBLOCK WITH FLOW CONTROL

The BF Monoblock valve has a Priority Adjustable flow Control working on the 1st Spool with the excess (unused) flow recu-perated back into the valve system not lost to the tank!
The Flow control is Pressure Compensated

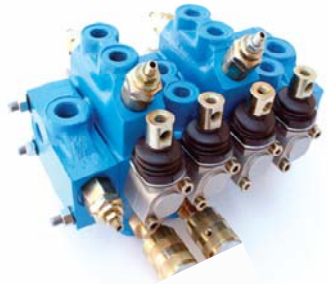

BANKABLE SPOOL VALVES

The BC range of Bankable Slice valves includes sizes of 20 Lpm (1/4”) up to 180 Lpm (3/4”). Available with Service Relief, Anti-Cavitation, various Flow Controls, all Spool and control options, etc...

SOLENOID OPERATED VALVES

The BM, BF & BC range of Solenoid operated valves are available with flow rates from 20 Lpm (1/4”) up to 70 Lpm (1/2”) options

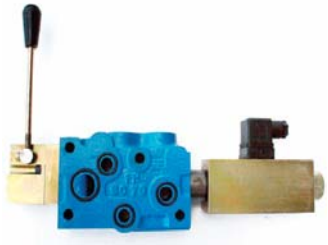

SOLENOID & LEVER VALVES

The BM, BF & BC range of Solenoid & manual lever operated valves are available with flow rates from 35 Lpm (3/8”) up to 65 Lpm (1/2”).options

TEL 0118 976 1616 FAX 0118 976 1626

back to content page

MONOBLOCK CONTROL VALVES

BM Series Monoblock Directional Control Valves
Flow from 25LPM (1/4"BSP) up to 180LPM (1"BSP)

TYPE	No OF SPOOLS	MAX FLOW LPM	MAX PRESURE BAR	SERVICE PORTS	P & T PORTS SIDE *(TOP)*
BM10	1 to 6	15	300	1/4"	1/4" *(1/4")*
BM20	1 to 6	25	300	1/4"	3/8" *(1/4")*
BM30	1	45	300	3/8"	3/8" (—)
BM30 GK	1	45	400	3/8"	3/8" (—)
BM35	1 to 6	35	300	3/8	3/8" *(3/8")*
BM40	1 to 7	45	300	3/8"	1/2" *(3/8")*
BM50	1 to 6	60	300	1/2"	1/2"
BM70	1 to 6	90	300	1/2"	3/4" *(1/2")*
BM100	1 to 3	130	300	3/4"	3/4"
BM150	1	180	300	3/4"	1" *(3/4")*
BM180	1	190	300	1"	1"

TEL 0118 976 1616 FAX 0118 976 1626

BB20 VALVE

The BB20 Valve is primarily manufactured for the Hydraulic Trailer industry.
The valve incorporates Pilot operated check valves for Single and Double acting cylinders.

VBS

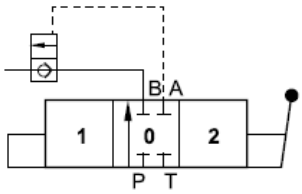

VBD

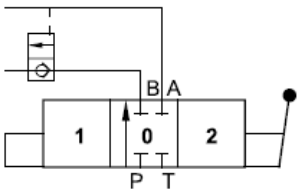

VBM

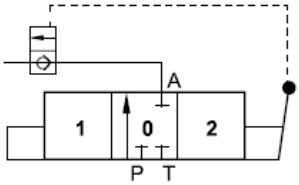

Accessories, Spool Types and controls on pages 27 - 32

back to content page

MONOBLOCK WITH PRIORITY ADJUSTABLE FLOW CONTROL

BF RANGE OF MONOBLOCK CONTROL VALVES c/w PRIORITY ADJUSTABLE FLOW CONTROL 20LPM (1/4"BSP) up to 90LPM (1/2"BSP)

FUNCTION OF BF VALVES:-

The flow rate is regulated by the Flow Control to the 1 Spool and the excess flow is recuperated back into the valve system, not lost to the tank. When the 1 Spool is not in function, the rest of the valve ie spools 2, 3, 4, 5 or 6 will have the full pump flow.
A typical example of this is to run a hydraulic motor from the 1ST Spool and then work cylinders with the downstream levers without a drop in speed to the Motor! The Flow Control is Pressure compensated.

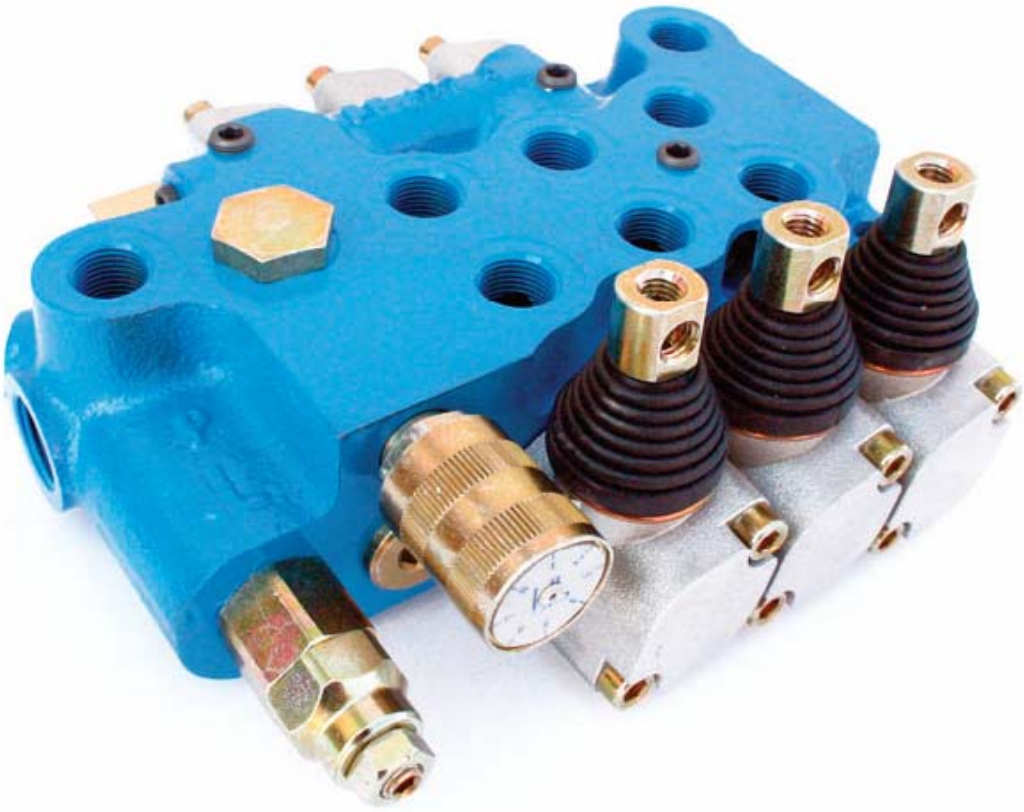

VALVE TYPE	NUMBER OF SPOOLS	MAX FLOW LPM	MAX PRESSURE BAR	A & B SERVICE PORTS	P & T PORTS SIDE *(TOP)*
BF201/1	1 TO 5	25	300	1/4"	3/8" *(1/4")*
BF401/1	1 TO 6	45	300	3/8"	1/2" *(3/8")*
BF701/1	1 TO 5	90	300	1/2"	3/4" *(1/2")*

TEL 0118 976 1616 FAX 0118 976 1626

back to content page

BANKABLE CONTROL VALVES

The BC range of Sectional valves includes sizes of 20 Lpm (1/4") up to 180 Lpm (1").
Available with Service Relief, Anti-Cavitation, various Flow Controls, with all Spool and control options.

A Solenoid operated Unloader valve is now available on BC60 !

VALVE MODEL	NUMBER OF SPOOLS	MAX FLOW LPM	MAX PRESSURE BAR	SERVICE PORTS	P & T PORTS
BC20	1 TO 10	25	300	1/4"	3/8"
BC40	1 TO 10	45	300	3/8"	1/2"
BC40 SOLENOID OPERATED	1 TO 10	35	190	3/8"	1/2"
BC40 SOLENOID & LEVER OP.	1 TO 10	35	190	3/8"	1/2"
BC60	1 TO 10	70	300	1/2"	1/2"
BC60 SOLENOID OPERATED	1 TO 10	50	190	1/2"	1/2"
BC70	1 TO 10	90	300	1/2"	3/4"
BC70 SOLENOID OPERATED	1 TO 10	65	190	1/2"	3/4"
BC70 SOLENOID & LEVER OP.	1 TO 10	65	190	1/2"	3/4"
BC150	1 TO 10	180	300	3/4"	1"

TYPE OF ELEMENTS	Pt No	BC20	BC40	BC60	BC70	BC150
INLET SECTION WITH RELIEF / NO RELIEF	TE U	✔	✔	✔	✔	✔
INLET WITH SOLENOID UNLOADER VALVE	TESU			✔		
INLET WITH PRESSURE REDUCING VALVE AND SOLENOID UNLOADER VALVE	TEPRSE			✔		
OUTLET SECTION	TU	✔	✔	✔	✔	✔
STANDARD ELEMENT	EL STD	✔	✔	✔	✔	✔
ELECTRIC SOLENOID OPERATION ELEMENT	EL EO	✔	✔	✔	✔	✔
ELECTRIC SOLENOID & LEVER OPERATION	EL EDO		✔	✔		
SERVICE RELIEF VALVE ELEMENT	EL VLAB	✔	✔	✔	✔	✔
PRIORITY ELEMENT	EL P	✔	✔	✔	✔	
RECUPERATION ELEMENT	EL R	✔	✔	✔	✔	
PRIORITY SERVICE RELIEF ELEMENT	EL VLAB P	✔	✔	✔	✔	
RECUPERATION SERVICE RELIEF ELEMENT	EL VLAB R	✔	✔	✔	✔	
STANDARD FLOW CONTROL SECTION	RFSO	✔	✔	✔	✔	
PRIORITY FLOW CONTROL SECTION	RFPO	✔	✔	✔	✔	
CF ELEMENT	CF	✔	✔			
CF ELEMENT WITH SERVICE RELIEF	CF VLAB	✔	✔			

TEL 0118 976 1616 FAX 0118 976 1626

back to content page

VALVE CONTROL OPTIONS

DESCRIPTION		PART NUMBER	BM20 BF201 BC20 BB20	BM30 BM40 BF401 BC40	BM70 BF701 BC70 BM100	BM150 BM180 BC150
STANDARD LEVER OPERATION		MO	✓ ✓ ✓ ✓	✓ ✓ ✓ ✓	✓ ✓ ✓	✓ ✓
INVERSE LEVER OPERATION		DX	✓ ✓ ✓ ✓	✓ ✓ ✓ ✓	✓ ✓ ✓	✓ ✓
LEVER WITH CAM		MC	✓ ✓ ✓ ✓	✓ ✓ ✓ ✓	✓ ✓ ✓	✓ ✓
SAFETY LEVER		MX	✓ ✓ ✓ ✓	✓ ✓ ✓ ✓	✓ ✓ ✓	✓ ✓
LEVER WITH STROKE LIMITER		ML	✓ ✓ ✓ ✓	✓ ✓ ✓ ✓	✓ ✓ ✓	✓ ✓
CAM OPERATION		DO	✓ ✓ ✓ ✓	✓ ✓ ✓ ✓	✓ ✓ ✓	
DUAL CONTROL WITH THREADED ROD		1DC	✓ ✓ ✓ ✓	✓ ✓ ✓ ✓	✓ ✓ ✓	
JOYSTICK MANIPULATOR CONTROL		JS	✓ ✓ ✓ ✓	✓ ✓ ✓	✓ ✓ ✓	✓

SPOOLS & CONTROLS ON PAGE 29

TEL 0118 976 1616 FAX 0118 976 1626

back to content page

VALVE CONTROL OPTIONS

DESCRIPTION		PART NUMBER	BM20 BF201 BC20 BB20	BM30 BM40 BF401 BC40	BM70 BF701 BC70	BM150 BM180 BC150
REMOTE CABLE OPERATION		CO	✓ ✓ ✓ ✓	✓ ✓ ✓ ✓	✓ ✓ ✓	✓ ✓
INVERSE CABLE OPERATION		CO DX	✓ ✓ ✓ ✓	✓ ✓ ✓ ✓	✓ ✓ ✓	✓ ✓
JOYSTICK CABLE OPERATION	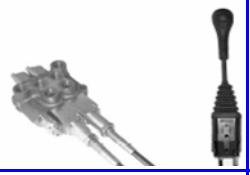	CO JS	✓ ✓ ✓ ✓	✓ ✓ ✓	✓ ✓ ✓ ✓	✓
PNEUMATIC PILOT OPERATION		1P		✓ ✓ ✓ ✓	✓ ✓ ✓ ✓	✓ ✓
HYDRAULIC PILOT OPERATION		HO		✓ ✓ ✓ ✓	✓ ✓ ✓ ✓	
MICROSWITCH		MSW		✓ ✓ ✓ ✓	✓ ✓ ✓ ✓	✓ ✓
MICROSWITCH		MS		✓ ✓ ✓ ✓	✓ ✓ ✓ ✓	
MICROSWITCH (ENCLOSED)		MSP	✓ ✓ ✓ ✓			

SPOOLS & CONTROLS ON PAGE 29

TEL 0118 976 1616 FAX 0118 976 1626

back to content page

SPOOL & CONTROL OPTIONS

COD	CIRCUITO *SPOOL TYPE*	BM10	BM20 BF200 BC20 BM35	BM30 BM40 BF400 BC40 BM50	BM70 BC70 BF700 BM100	BM150 BC150 BM180
A	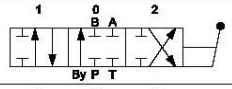	●	●	●	●	●
B	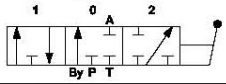	●	●	●	●	●
C	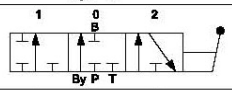	●	●	●	●	●
D	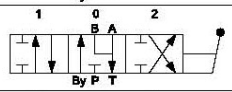	●	●	●	●	●
E	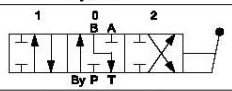	●	●	●	●	●
F	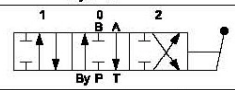	●	●	●	●	●
K	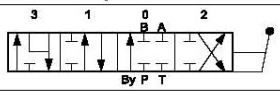	●	●	●		
L	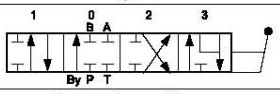			●	●	
M	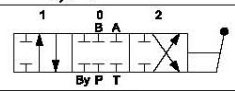	●	●	●		
R	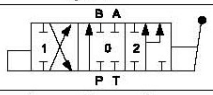	●		●	●	
Y	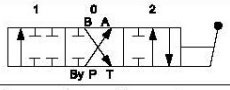		●	●		
Z	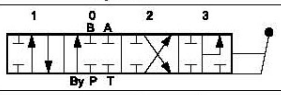	●		●	●	
AE	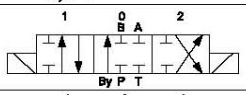		●	●	●	
BE	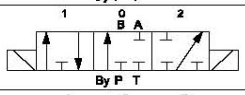		●	●	●	
DE	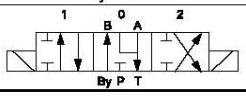		●	●	●	
12		12 VOLT DC		●	●	
24		24 VOLT DC	●	●	●	

COD	VALVOLA MAX *RELIEF VALVE*	CAMPO DI TARATURA *CALIBRATION FIELD* bar (psi)	TARATURA STANDARD *STANDARD CALIBRATION* bar (psi)	BM10	BM20 BF20 BC20	BM30 BM40 BF40 BC40	BM70 BF70 BC70	BM150 BC150
X		10 - 90 (145 - 1305)	70 (1015)	●	●	●	●	●
U		90 - 250 (1305 - 3626)	140 (2030)	●	●	●	●	●
K		150 - 300 (2175 - 4351)	200 (2900)	●	●	●	●	●

Taratura standard effettuata con pompa 5 lt/min.
Standard calibration made with a 5 lt/min. pump

Su richiesta filettature diverse. *Other threads available on request*

COD	POSIZIONATORE *SPOOL CONTROL*	BM10	BM20 BF200 BC20 BM35	BM30 BM40 BF400 BC40 BM50	BM70 BC70 BF700 BM100	BM150 BC150 BM180
1	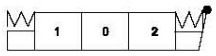	●	●	●	●	●
2	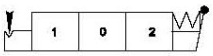	●	●	●	●	●
3	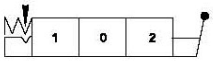	●	●	●	●	●
4	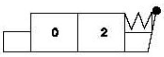	●	●	●	●	●
5	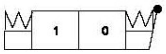	●	●	●	●	●
6	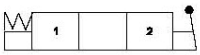	●	●	●	●	●
7	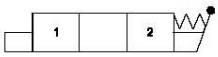	●	●	●	●	●
8	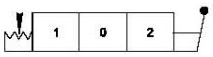	●	●	●	●	●
9	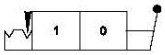	●	●	●	●	●
10	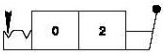	●	●	●	●	●
11	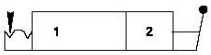	●	●	●		
12	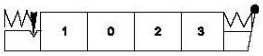			●	●	
13	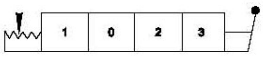		●	●		
14	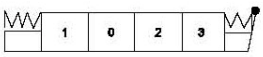			●	●	
16	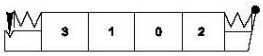	●	●	●		
1E	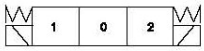		●	●	●	
1EA	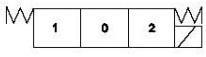		●	●	●	
1EB	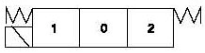		●	●	●	

COD	FILETTATURE STANDARD *STANDARD THREADS*	BM10	BM20 BF20 BC20	BM30 BM40 BF40 BC40	BM70 BF70 BC70	BM150 BC150
G	BPS GAS	●	●	●	●	●
F	UNF Sae O-ring ports		●	●	●	●

TEL 0118 976 1616 FAX 0118 976 1626

back to content page

CABLE CONTROL

CABLE OPERATION AVAILABLE FROM 1 MTR TO 4.5 MTR CABLE & LEVER OPERATION, JOYSTICK CABLES WITH OR WITHOUT ELECTRIC SWITCHES.

Standard Cable operation = CO

Inverse Cable operation = CO DX

Joystick Cable operation = JS

TEL 0118 976 1616 FAX 0118 976 1626

Each Single cable consists of the Lever, Cable & Attachment Kit

Each Joystick cable consists of the Joystick, 2 Cables & 2 Attachment kits

SINGLE LEVER CABLES	BM20 BC20 BF201	BM30 BM40 BC40/60 BF401	BM70 BC70 BF701 BM100	BM150 BM180 BC150
LEVER STANDARD	3047	3047	3047	3047
FITTING KIT STANDARD	20KIT	212042	212065	212044
FITTING KIT INVERSE	INV20KIT	INV212042	INV212065	INV212044
1.0 METRE CABLE 3056/1.00	3056/1.00	3056/1.00	3056/1.00	3056/1.00
1.5 METRE CABLE 3056/1.50	3056/1.50	3056/1.50	3056/1.50	3056/1.50
2.0 METRE CABLE 3056/2.00	3056/2.00	3056/2.00	3056/2.00	3056/2.00
2.5 METRE CABLE 3056/2.50	3056/2.50	3056/2.50	3056/2.50	3056/2.50
3.0 METRE CABLE 3056/3.00	3056/3.00	3056/3.00	3056/3.00	3056/3.00
3.5 METRE CABLE 3056/3.50	3056/3.50	3056/3.50	3056/3.50	3056/3.50
4.0 METRE CABLE 3056/4.00	3056/4.00	3056/4.00	3056/4.00	3056/4.00
5.0 METRE CABLE 3056/5.00	3056/5.00	3056/5.00	3056/5.00	3056/5.00
JOYSTICK LEVERS				
JOYSTICK CONTROLLER	3336	3336	3336	3336
JOYSTICK CONTROL WITH 1 SWITCH	3344	3344	3344	3344
JOYSTICK CONTROL WITH 2 SWITCH	3345	3345	3345	3345

back to content page

ACCESSORIES & SPARES

CONTROLS	PART REF	BM20 BF201 BB20 BC20	BM30 BM40 BF401 BC40/60	BM70 BF701 BC70	BM150 BM180 BC150
SPRING POSITIONS 1, 4, 5, 6 & 7	1, 4, 5, 6, 7	✔	✔	✔	✔
DETENT POSITION 8	8	✔	✔	✔	✔
DETENT POSITIONS 9, 10 & 11	9, 10, 11	✔	✔	✔	✔
SPRING DETENT POSITIONS 2 & 3	2, 3		✔	✔	✔
POSITION 12 & 16	12	✔	✔	✔	
POSITION 13 & 14	13, 14, 16	✔	✔	✔	
SPOOLS & ACTUATORS					
SPOOLS TYPE A, B. D, E, F, & M, L, K, Y, R	SPOOL	✔	✔	✔	✔
JOYSTICK CONTROLLER	JS	✔	✔	✔	✔
PNEUMATIC CONTROL	1P		✔	✔	✔
OIL PILOT CONTROL	HO	✔	✔	✔	✔
ADAPTION PLUGS					
HIGH PRESSURE CARRY OVER PLUG	CO	✔	✔	✔	✔
CLOSED CENTRE PLUG	CCP	✔	✔	✔	✔
RELIEF VALVE PLUG	RVP	✔	✔	✔	✔
LEVER & CONTROL CAPS					
LEVER	LEV	✔	✔	✔	✔
HANDLE CAP ASSEMBLY WITH BOLTS	HCA	✔	✔	✔	✔
CONTROL CAP ASSEMBLY WITH BOLTS	CCA	✔	✔	✔	✔
RELIEF VALVE TYPE U, X & K	CP—U,X.K	✔	✔	✔	✔
NON RETURN CAP & SPRING	NRC	✔	✔	✔	✔
BRASS END CAPS	BEC		✔		
FLOW CONTROLS, RELIEF VALVES, ETC					
FLOW CONTROL CARTRIDGE BC TYPE	BC FCC	✔	✔	✔	
FLOW CONTROL CARTRIDGE BF TYPE	BF FCC	✔	✔	✔	
FLOW CONTROL KNOB BC OR BF TYPE	BC/BF FCK	✔	✔	✔	
SPOOL SEALS					
SPOOL SEALS PER SPOOL	SSK	✔	✔	✔	✔
BC SECTIONAL ELEMENT SEAL KIT	ESK	✔	✔	✔	✔
MICROSWITCHES, ETC					
MICROSWITCH TYPE MSW	MSW	✔	✔		
MICROSWITCH TYPE MS	MSP		✔	✔	
ELECTRIC SOLENOID					
SOLENOID COMPLETE	BLB SOL		✔	✔	
SOLENOID COIL	BLB SOL COIL		✔	✔	

TEL 0118 976 1616 FAX 0118 976 1626

back to content page

ACCESSORIES AND ORDER CODE

CARRY OVER PLUG ... CO
RELIEF VALVE PLUG ... RVP
CLOSED CENTRE PLUG ...

CO

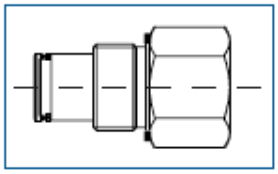

CCP

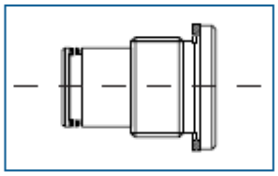

RVP

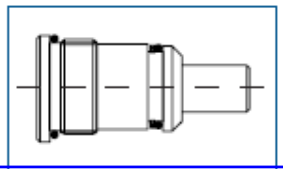

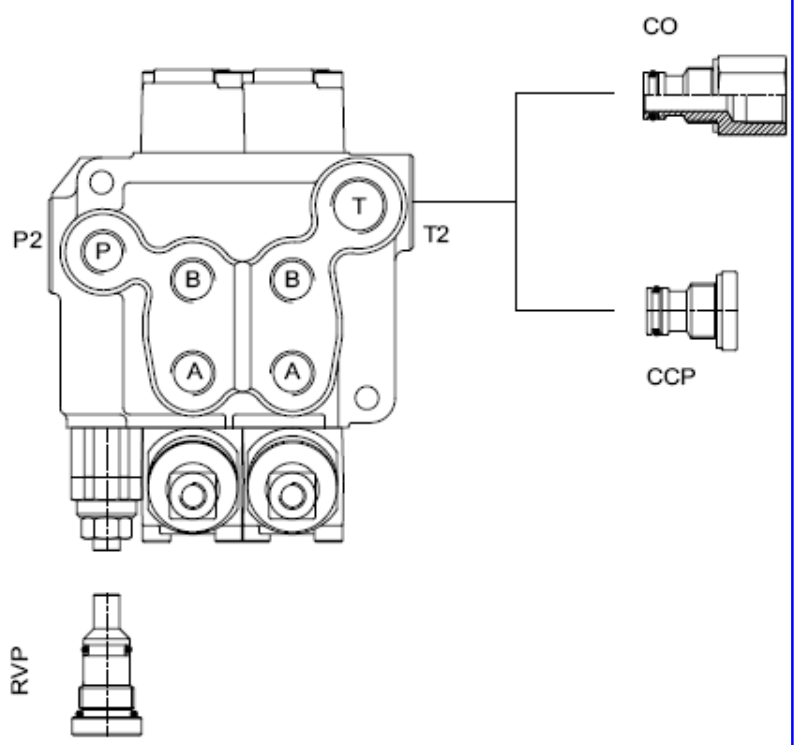

BLB VALVE ORDER CODE

PART NUMBER EXAMPLE

BM40 / 4 G U MO A 1 MSO / EO AE1E 12DC / MO B2 / MO L12 1P / CO

TYPE OF VALVE
No of LEVERS
BSP
RELIEF VALVE TYPE
MANUAL OPERATION
SPOOL CONTROL
MICROSWITCH
ELECTRIC OPERATION
ELECTRIC SPOOL TYPE
VOLTAGE
MANUAL OPERATION
SPOOL TYPE
CONTROL TYPE
MANUAL OPERATION
SPOOL TYPE
CONTROL TYPE
PNEUMATIC OPERATION
HIGH PRESSURE CARRY OVER

TEL 0118 976 1616 FAX 0118 976 1626

back to content page

KVM BANKABLE SOLENOID VALVE

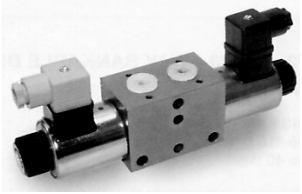

Kladivar KVM valves are modular bankable type solenoid valves. Pump Unloader, Pressure Relief and Flow control Can be incorporated in the Inlet.
Utilises standard CETOP 3 modular valves to give options of vertical stacking Flow control, Relief and Pilot operated Check valves, Available with bsp ports and available in all voltages.

4/2 and 4/3 - WAY BANKABLE DIRECTIONAL VALVES type KVM

- NS 6
- to 315 bar
- to 40 l/min

- Threaded connection to ISO 9974, ISO 1179
- Series or parallel connections
- Inlet plate posibility with pressure relief valve, pump unloading valve or flow control valve
- Posibility to use standard components for vertical stacking

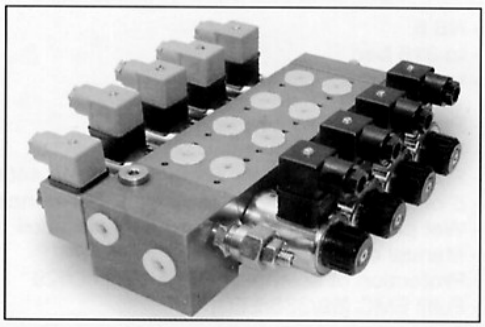

KVM - 6 -...- VV - KV - N4

Basic concept

KLADIVAR

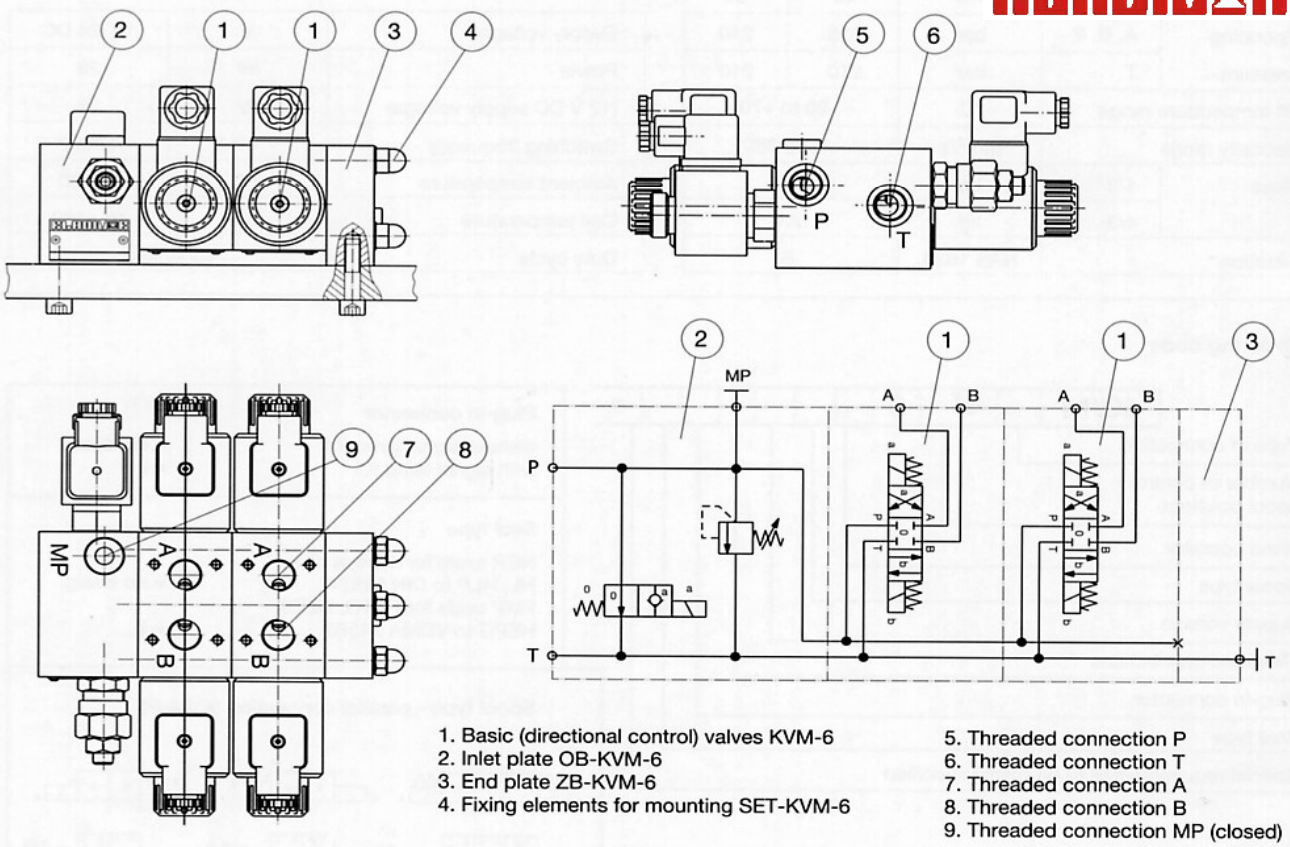

1. Basic (directional control) valves KVM-6
2. Inlet plate OB-KVM-6
3. End plate ZB-KVM-6
4. Fixing elements for mounting SET-KVM-6
5. Threaded connection P
6. Threaded connection T
7. Threaded connection A
8. Threaded connection B
9. Threaded connection MP (closed)

KLADIVAR

TEL 0118 976 1616 FAX 0118 976 1626

back to content page

KVM BANKABLE SOLENOID VALVE

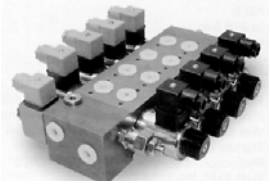

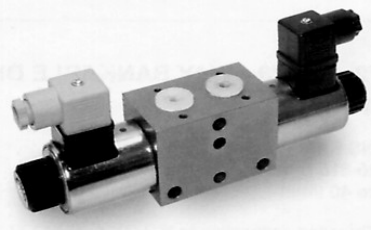

STANDARD 4/3 KVM VALVE SECTION

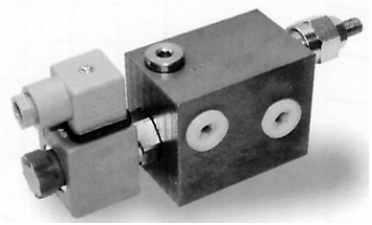

INLET SECTION c/w UNLOADER & MAIN RELIEF VALVE

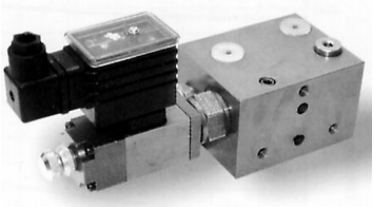

INLET SECTION WITH PROPORTIONAL FLOW CONTROL

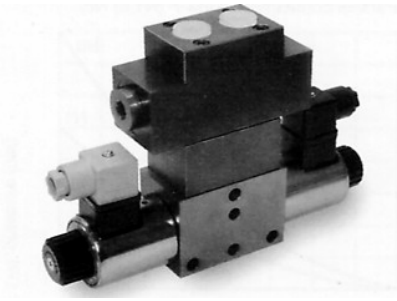

KVM-P-4/3 VALVE ASSEMBLED WITH VP-NOV PILOT OPERATED CHECK VALVE

Technical data — **Hydraulic**

			KVM-P	KVM-S
Size			6	6
Flow rate		l/min	40	30
Operating pressure	A, B, P	bar	315	210
	T	bar	210	210
Oil temperature range		°C	-20 to +70	
Viscosity range		mm^2/s	15 to 380	
Mass	4/2	kg	1,85	
	4/3	kg	2,4	
Filtration		NAS 1638	8	

Electrical

Supply voltage	V	12, 24 DC
Power	W	29
(12 V DC supply voltage)	W	36
Switching frequency	1/h	15000
Ambient temperature	°C	to +50
Coil temperature	°C	to +180
Duty cycle	continions	

KLADIVAR

KVM - - 4/ - 6 - - - - - - *

- Type of connection
- Number of control spool positions
- Hand operator
- Spool type
- Supply voltage
- Threaded connections
- Plug-in connector
- Seal type
- Special requirementes to be briefly specified

Type of connection
series connection = S
parallel connection = P

Number of control spool positions
two positions = 2
three positions = 3

Hand operator
emergency hand operation = no design
hand operator with rubber = G

Supply voltage
direct voltage 24V = no design
direct voltage 12V = 12 DC

Threaded connections
G3/8 (ISO 1179) = 3/8
M 18 x 1,5 (ISO 9974) = no design

Plug-in connector
without signal lamp K1 = no desig.
with signal lamp K1 = L

Seal type
NBR seals for mineral oil HL, HLP to DIN 51524 = no desig.
FMP seals for HETG, HEES, HEPG to VDMA 24568 = E

Spool type - parallel connection (KVM-P)

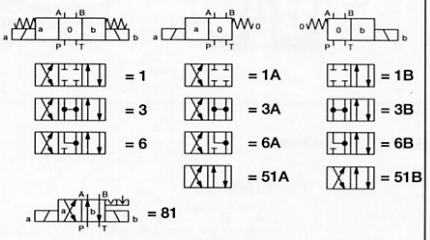

Spool type - series connection (KVM-S)

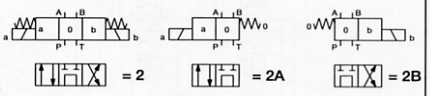

TEL 0118 976 1616 FAX 0118 976 1626

back to content page

KVM BANKABLE SOLENOID VALVE

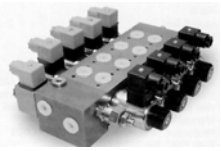

COMPLETE VALVE SYSTEM ORDERING CODE

KVM-P-	2	/OB VV35 KV1/	1 + NDV/	6 + NOV/	ZB/	12DC

- NUMBER OF SECTIONS (*2*)
- INLET OPTION (*Relief VV35 & Unloading valve*)
- 1st SECTION *Spool type '2' + Flow Control)*
- 2nd SECTION *Spool type 6 + P.O. Check*
- END PLATE
- VOLTAGE (*AC/DC*)

KVM VALVES	DESCRIPTION
INLET PLATES	
OB-KVM-6	INLET PLATE STANDARD
VV-35 (VV20)	ADDITION FOR RELIEF VALVE
KV1 (KVO)	ADDITION FOR UNLOADER VALVE
TVTP-25(50)-B	ADDITION FOR PRIORITY FLOW CONTROL ROTARY KNOB OPERATION
TVTP-25(50)-PG	ADDITION FOR FLOW CONTROL PROPORTIONAL SOLENOID OPERATED
R59 AMPLIFIER	ADDITION FOR R59 AMPLIFIER FOR PROPRTIONAL SOLENOID
CONTROL VALVES	
KVM-P-4/2	SPOOL TYPES 1A / 1B / 3A / 3B / 6A / 6B / 51A / 51B / 2A / 2B
KVM-P-4/3	SPOOL TYPES 1 / 2 / 3 / 6
ADAPTOR PLATES	
STACK-KVM-6-N2	ADAPTOR PLATES FOR SINGLE STACK ON DIRECTIONAL VALVE
STACK-KVM-6-N3	ADAPTOR PLATES FOR DOUBLE STACK ON DIRECTIONAL VALVE
STACKING MODULES	
VP-NDV-6-D	DUAL FLOW CONTROL VALVE ON PORTS A & B
VP-RT-6-EA / EB	SINGLE RELIEF VALVE ON PORT A OR PORT B
VP-RT-6-D	DUAL RELIEF VALVE ON PORTS A & B
VP-NOV-6-D	DUAL PILOT OPERATED CHECK VALVE ON PORTS A & B
VP-NOV-6-EA / EB	SINGLE PILOT OPERATED CHECK VALVE ON PORT A OR PORT B
OUTLET PLATE,ETC	
ZB	OUTLET PLATE 1/2" BSP
TIE ROD SETS	
SET-KVM-6-N1 / N2/ N3	TIE ROD SET FOR 1, 2 OR 3 SECTION VALVE
SET-KVM-6-N4 / N5/ N6	TIE ROD SET 4, 5 OR 6 SECTION VALVE
SET-KVM-6-N7 / N8	TIE ROD SET 7 OR 8 SECTION VALVE

TEL 0118 976 1616 FAX 0118 976 1626

back to content page

CETOP VALVES

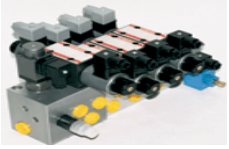

Kladivar CETOP 3, 5 and 7 valves are available in various control options including Electric Solenoid, Manual Lever and Pilot control. All valves are supplied with mounting bolts and Electrical connectors

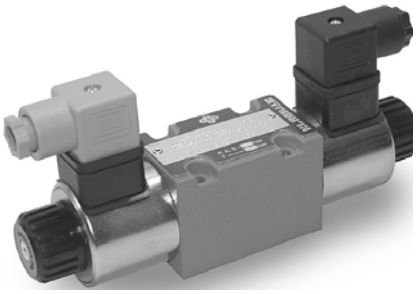

KLADIVAR

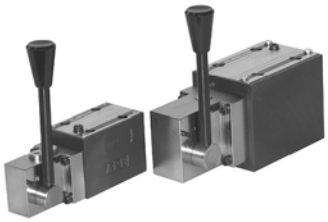

MODEL CODE	CETOP SIZE	TYPE	OPERATION TYPE	FLOW LPM	MAX PRESSURE BAR	PAGE No
CETOP 3						
3KO-6	**3**	3 CHAMBER COMPACT VERSION WITH OPTIMIZED FLOW PATHS	SOLENOID	40	250	38
5KO-6	**3**	5 CHAMBER VALVE WITH INCREASED FLOW PATHS AND SPOOL GUIDANCE	SOLENOID	75	350	40
5KO-6-R/RA	**3**	MANUAL LEVER OPERATION	LEVER	60	350	48
5KO-6-H	**3**	OIL PILOT OPERATION	OIL PILOT	80	350	47
CETOP 5						
5KO-10	**5**	5 CHAMBER VALVE WITH INCREASED FLOW PATHS AND SPOOL GUIDANCE	SOLENOID	120	350	42
5KO-10-R/RA	**5**	MANUAL LEVER OPERATION	LEVER	100	350	48
5KO-6-H	**5**	OIL PILOT OPERATION	OIL PILOT	130	350	47
CETOP 7						
KV-16-R/RA	**7**	MANUAL LEVER OPERATION	LEVER	300	350	44
KV-16	**7**	SOLENOID PILOT OPERATION	SOLENOID	300	350	44

CETOP Modular Valves on page 48 to 49, Subplates on pages 50 to 52

TEL 0118 976 1616 FAX 0118 976 1626

back to content page

CETOP 3 COMPACT VALVE TYPE 3KO

4/2 and 4/3 - WAY DIRECTIONAL VALVES type KV-3KO

- NS 6
- to 250 bar
- to 40 l/min

- Direct operation by solenoid
- Connection diagram and connecting dimensions to ISO 4401, DIN 24340
- Different types of plug-in connectors
- 3-chamber model
- Optimized flow paths for low losses of pressure
- Wet pin solenoid with interchangeable coil
- Manual emergency control
- Protection of solenoid IP 65 to DIN EN 60529
- Fulfil EMC (89/336/EEC)

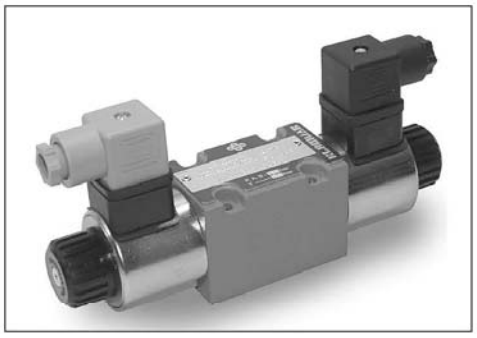

KV-4/3-3K0-6

Description of operation

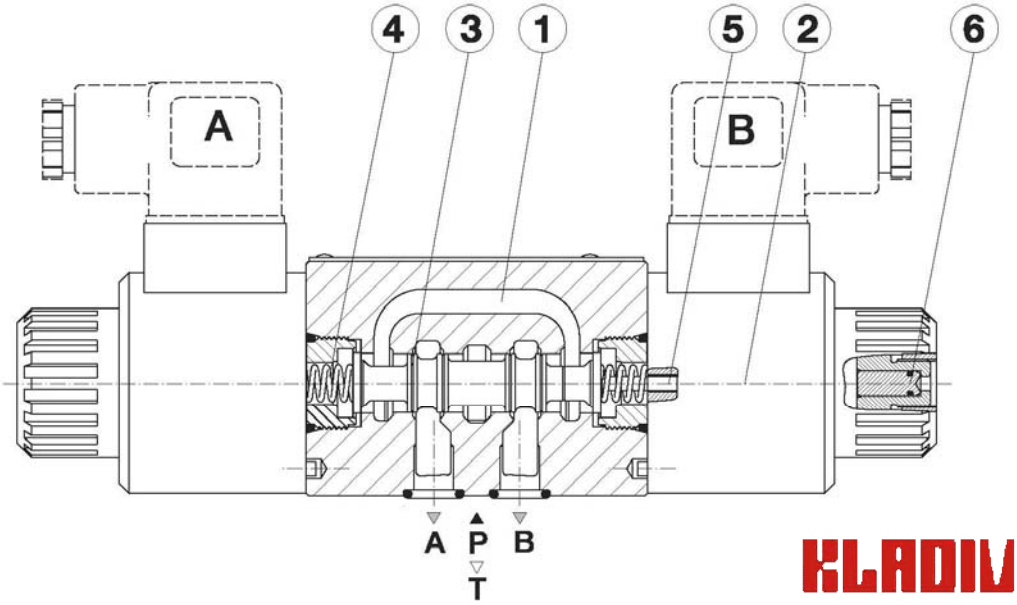

KLADIVAR

Directional valves type KV-3KO with direct solenoid operation control the direction of the hydraulic medium flow.

These directional valves consist of a housing (1), a control spool (3), and one solenoid (2) with two return springs (4) in 4/2-way directional valves, and two solenoids (2) with two return springs (4) in 4/3-way directional valves. In 4/3-way directional valves the centre position of the control spool is the neutral position. The change-over to the operating position (a) and (b) is done by energising the solenoids (2) "a" and "b" respectively, whereby the solenoid plunger acts on the control spool (3) via the operating pin (5), thus clearing the corresponding flow ways and establishing relevant links between ports A, B, P, and T. For selection of spool types refer to page 3.11.6.
When the solenoid (2) is de-energised, the control spool (3) is returned to its neutral position by the return spring (4). The change-over can be done manually by pressing the emergency hand operator (6).

Technical data

Hydraulic

Size		6	
Flow rate		see p-Q curves, page 3.11.7	
Operating pressure ports P,A,B		bar	250
Operating pressure port T		bar	210
Oil temperature range		°C	-20 to +70
Viscosity range		mm²/s	15 to 380
Mounting position		optional	
Mass	4/2	kg	1,3
	4/3	kg	1,8
Filtration		NAS 1638	8

Electrical

Supply voltage	direct	V	12, 24, 48
	alternating		110, 230
Switch-on time**		ms	50 to 80
Switch-off time**		ms	30 to 55
Switching frequency		1/h	15 000
Ambient temperature		°C	to +50
Coil temperature		°C	to +180
Duty cycle		Continious	

** -The switching-on and off times apply to 24 V DC solenoids

TEL 0118 976 1616 FAX 0118 976 1626

back to content page

CETOP 3 VALVE TYPE 3KO

Ordering code

KV - / -3KO- 6 - - *

- Working ports
- Number of control spool positions
- Manual override option
- Spool type
- Supply voltage
- Connector type
- Overvoltage protection
- Constant action restrictor
- Seal type
- Special requirements to be briefly specified

KLADIVAR

Working ports

3 working ports = **3**
4 working ports = **4**

Number of control spool positions

two positions = **2**
three positions = **3**

Manual override option

Emergency manual override = **no desig.**
Manual override with rubber cover = **G**

Supply voltage

direct voltage		alternating voltage	
24 V	= **no desig.**	12 V	= **12 AC**
12 V	= **12 DC**	24 V	= **24 AC**
48 V	= **48 DC**	48 V	= **48 AC**
110 V	= **110 DC**	110 V	= **110 AC**
230 V	= **230 DC**	230 V	= **230 AC**

- Alternating voltage solenoids are fitted with a bridge rectifier.
- With solenoids of over 48 V an earthing clamp (⏚) to ISO 4400 must be connected.

Connector type

EN 175301-803 without signal lamp = **no desig.**
EN 175301-803 with signal lamp = **L**
EN 175301-803 without connector = **K**
AMP junior timer without connector = **M**

Overvoltage

Without overvoltage protection = **no desig.**
With overvoltage protection = **T**

Constant action restrictor

Without = **no desig.**
0,8mm dia. = **D08**
1,0mm dia. = **D10**
1,2mm dia. = **D12**

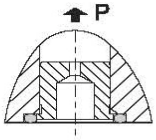

If flow rates greater than permissible occur during change-over, a cartridge throttle must be fitted into P-line of the directional valve.

Seal type

NBR seals for mineral oil HL, HLP, to DIN 51524 = **no desig.**
FPM seals for HETG, HEES, HEPG to VDMA 24568 and ISO 15380 = **E**

Spool types

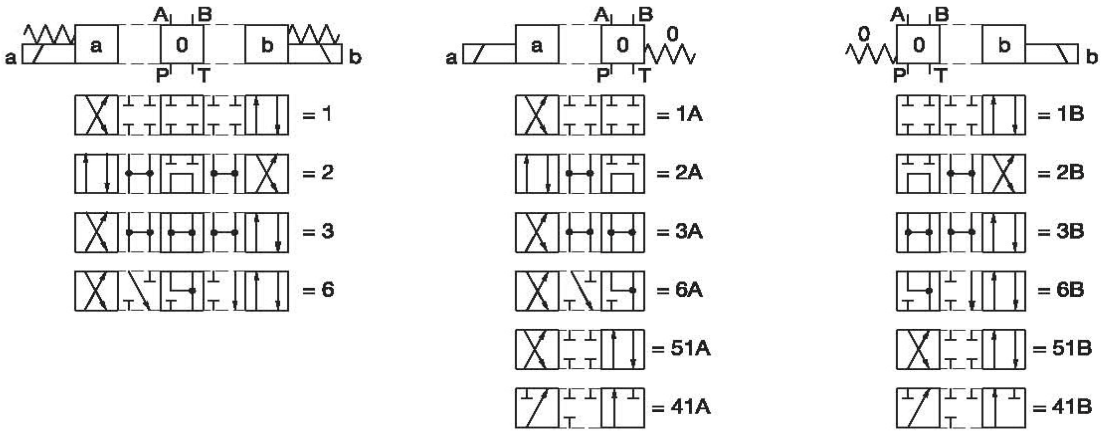

- Port T in the valves with spool type 41A and 41B to be used as lekage line when working pressure is higher than 210 bar.

TEL 0118 976 1616 FAX 0118 976 1626

back to content page

CETOP 3 VALVE TYPE 5KO

4/2 and 4/3 - WAY DIRECTIONAL VALVES type KV

- NS 6
- to 350 bar
- to 75 l/min

- Direct operation by solenoid
- Connection diagram and connecting dimensions to ISO 4401, DIN 24340
- Plug-in connector for solenoids to ISO 4400
- 5-chamber model with good spool guidance
- Optimized flow paths for low losses of pressure
- Adjustment of the switching time
- Wet pin solenoid with interchangeable coil
- Manual emergency control
- Protection of solenoid IP 65 to DIN EN 60529
- Fulfil EMC (89/336/EEC)

KV-4/3-5K0-6

Description of operation

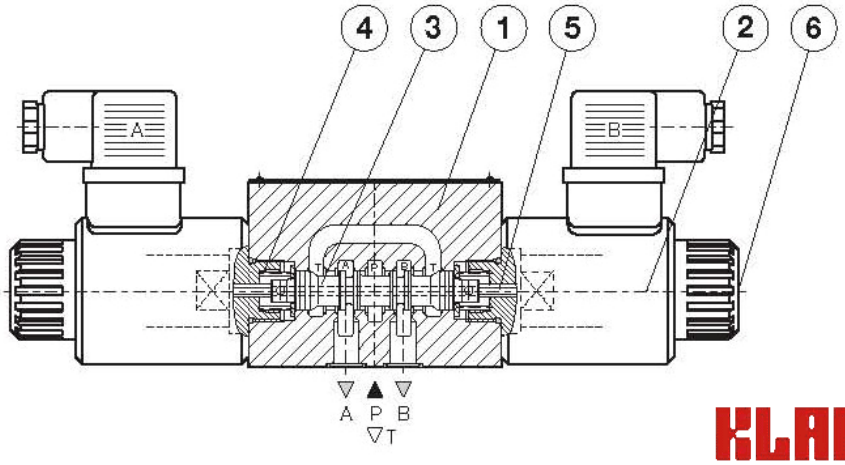

KLADIVAR

Directional valves type KV with direct solenoid operation control the direction of the hydraulic medium flow.

These directional valves consist of a housing (1), a control spool (3), and one solenoid (2) with two return springs (4) in 4/2-way directional valves, and two solenoids (2) with two return springs (4) in 4/3-way directional valves. In 4/3-way directional valves the centre position of the control spool is the neutral position. The change-over to the operating position (a) and (b) is done by energising the solenoids (2) "a" and "b" respectively, whereby the solenoid plunger acts on the control spool (3) via the operating pin (5), thus clearing the corresponding flow ways and establishing relevant links between ports A, B, P, and T. For selection of spool types refer to page 3.6.2.

When the solenoid (2) is de-energised, the control spool (3) is returned to its neutral position by the return spring (4). The change-over can be done manually by pressing the emergency hand operator (6).

KV-4/2-5KO-6-81

Directional valve with two operating position, two solenoids without springs allows the control spool to be held in the operating position (detent). The control spool remains in the operation position also when the solenoids are de-energised.

Technical data

Hydraulic

Size		6	
Flow rate		see p-Q curves, page 3.6.3	
Operating pressure ports P,A,B		bar	350
Operating pressure port T		bar	210
Oil temperature range		°C	-20 to +70
Viscosity range		mm²/s	15 to 380
Mounting position		optional	
Mass	4/2	kg	1,9
	4/3	kg	2,7
Filtration		NAS 1638	8

Electrical

Supply voltage	direct or alternating	V	12, 24, 48 110, 230
Power		W	29*
Switch-on time**		ms	50 to 80
Switch-off time**		ms	30 to 55
Switching frequency		1/h	15 000
Ambient temperature		°C	to +50
Coil temperature		°C	to +180
Duty cycle		continious	

** -The switching-on and off times apply to 24 V DC solenoids

* -12V supply voltage - 36 W

TEL 0118 976 1616 FAX 0118 976 1626

back to content page

CETOP 3 VALVE TYPE 5KO

Ordering code

KV - / -5KO- 6 - - *

- Working ports
- Number of control spool positions
- Spool type
- Supply voltage
- Plug-in connector
- Throttle
- Seal type
- Constant action restrictor
- Special requirements to be briefly specified

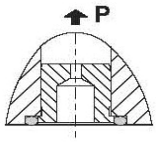

If flow rates greater than permissible occur during change-over, a cartridge throttle must be fitted into P-line of the directional valve.

KLADIVAR

TEL 0118 976 1616 FAX 0118 976 1626

Working ports

3 working ports = **3**
4 working ports = **4**

Number of control spool positions

two positions = **2**
three positions = **3**

Supply voltage

direct voltage		alternating voltage	
24 V	= **no desig.**	12 V	= **12 AC**
12 V	= **12 DC**	24 V	= **24 AC**
48 V	= **48 DC**	48 V	= **48 AC**
110 V	= **110 DC**	110 V	= **110 AC**
230 V	= **230 DC**	230 V	= **230 AC**

- Alternating voltage solenoids are fitted with a bridge rectifier.
- With solenoids of over 48 V an earthing clamp (⏚) to ISO 4400 must be connected.

* To fulfil EMC (89/336/EEC) a capacitor must be built in (see 10.2.2)

Plug-in connector

without signal lamp = **no design**
with signal lamp = **L**

Throttle

without throttle in "P" line = **no desig.**
throttle 0,8 mm dia = **D08**
throttle 1,0 mm dia = **D10**
throttle 1,2 mm dia = **D12**

Seal type

NBR seals for mineral oil HL, HLP, to DIN 51524 = **no desig.**
FPM seals for HETG, HEES, HEPG to VDMA 24568 and ISO 15380 = **E**

Constant action restrictor

Without restrictor = **no desig.**
Restrictor 0,3 dia. = **UD**

Spool types

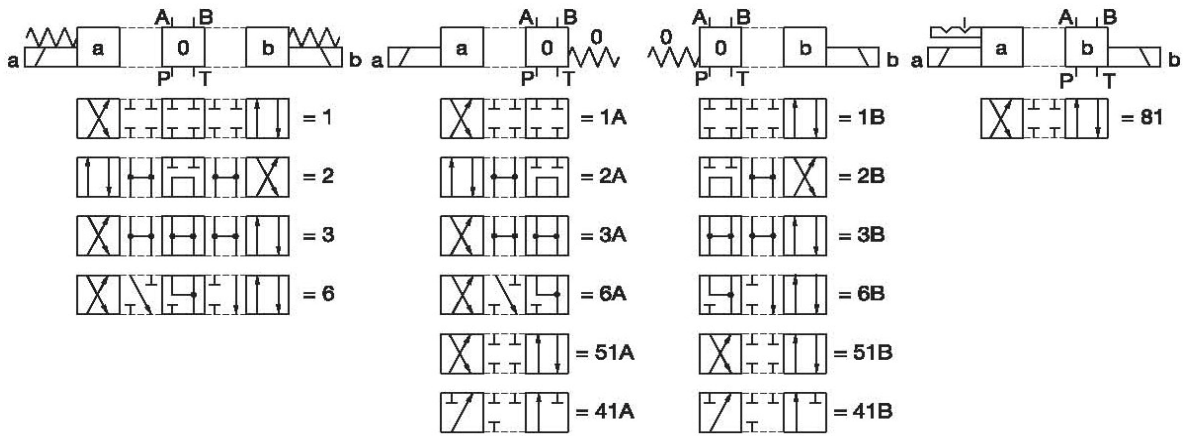

- Port T in the valves with spool type 41A and 41B to be used as lekage line.

Important note:
Valves with adjustment of the switching time - a constant or short - time static oil pressure of at least ≧ 4 bar must prevail at connection T of the directional control valve to maintain the pressure in the spring chambers.

back to content page

CETOP 5 VALVE TYPE 5KO

4/2 and 4/3 - WAY DIRECTIONAL VALVES type KV

- NS 10
- to 350 bar
- to 120 l/min

- Direct operation by solenoid
- Connection diagram and connecting dimensions to ISO 4401, DIN 24340
- Plug-in connector for solenoids to ISO 4400
- 5-chamber model with good spool guidance
- Optimized flow paths for low losses of pressure
- Adjustment of the switching time
- Wet pin solenoid with interchangeable coil
- Manual emergency control
- Protection of solenoid IP 65 to DIN EN 60529

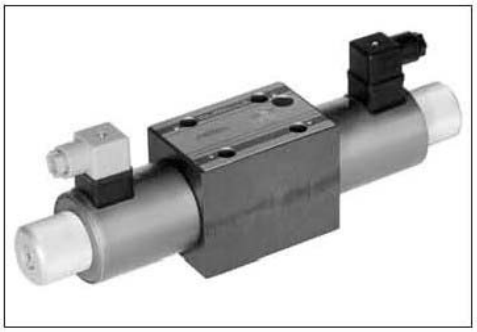

KV-4/3-5KO-10

Description of operation

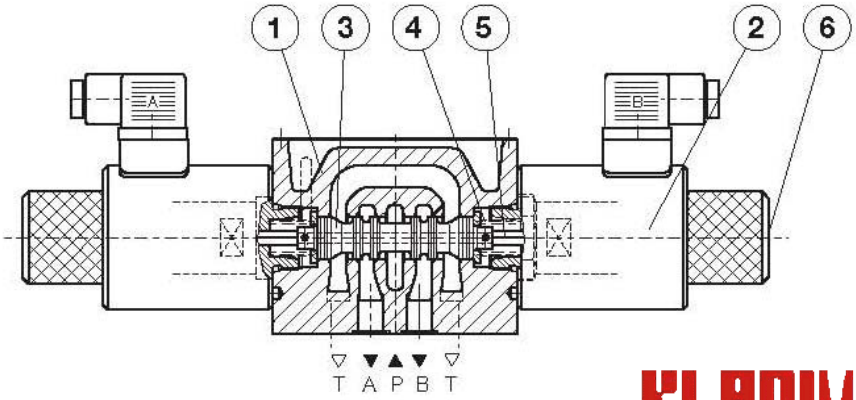

KLADIVAR

Directional valves type KV with direct solenoid operation control the direction of the hydraulic medium flow.

These directional valves consist of a housing (1), a control spool (3), and one solenoid (2) with two return springs (4) in 4/2-way directional valves, and two solenoids (2) with two return springs (4) in 4/3-way directional valves. In 4/3-way directional valves the centre position of the control spool is the neutral position. The change-over to the operating position (a) and (b) is done by energising the solenoids (2) "a" and "b" respectively, whereby the solenoid plunger acts on the control spool (3) via the operating pin (5), thus clearing the corresponding flow ways and establishing relevant links between ports A, B, P, and T. For selection of spool types refer to page 3.8.2.

When the solenoid (2) is de-energised, the control spool (3) is returned to its neutral position by the return spring (4). The change-over can be done manually by pressing the emergency hand operator (6).

KV-4/2-5KO-10-81

Directional valve with two operating position, two solenoids without springs allows the control spool to be held in the operating position (detent). The control spool remains in the operation position also when the solenoids are de-energised.

Technical data

Hydraulic

Size		10	
Flow rate		see p-Q curves, page 3.8.3	
Operating pressure ports P,A,B		bar	350
Operating pressure port T		bar	210
Oil temperature range		°C	-20 to +70
Viscosity range		mm^2/s	15 to 380
Mounting position		optional	
Mass	4/2	kg	6,5
	4/3	kg	7,3
Filtration		NAS 1638	8

Electrical

Supply voltage	direct or alternating	V	12, 24, 48 110, 230
Power		W	45
Switch-on time		ms	70 to 95
Switch-off time		ms	40 to 80
Switching frequency		1/h	15 000
Ambient temperature		°C	to +50
Coil temperature		°C	to +180
Duty cycle		continious	
The switching-on and off times apply to 24 V DC solenoids			

TEL 0118 976 1616 FAX 0118 976 1626

back to content page

CETOP 5 VALVE TYPE 5KO

Ordering code

KV - / -5KO- 6 - - *

- Working ports
- Number of control spool positions
- Spool type
- Supply voltage
- Plug-in connector
- Throttle
- Seal type
- Constant action restrictor
- Special requirements to be briefly specified

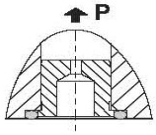

If flow rates greater than permissible occur during change-over, a cartridge throttle must be fitted into P-line of the directional valve.

KLADIVAR

Working ports

3 working ports = **3**
4 working ports = **4**

Number of control spool positions

two positions = **2**
three positions = **3**

Supply voltage

direct voltage		alternating voltage	
24 V	= **no desig.**	12 V	= **12 AC**
12 V	= **12 DC**	24 V	= **24 AC**
48 V	= **48 DC**	48 V	= **48 AC**
110 V	= **110 DC**	110 V	= **110 AC**
230 V	= **230 DC**	230 V	= **230 AC**

- Alternating voltage solenoids are fitted with a bridge rectifier.
- With solenoids of over 48 V an earthing clamp (⏚) to ISO 4400 must be connected.

* To fulfil EMC (89/336/EEC) a capacitor must be built in (see 10.2.2)

Plug-in connector

without signal lamp = **no design**
with signal lamp = **L**

Throttle

without throttle in "P" line = **no desig.**
throttle 0,8 mm dia = **D08**
throttle 1,0 mm dia = **D10**
throttle 1,2 mm dia = **D12**

Seal type

NBR seals for mineral oil HL, HLP, to DIN 51524 = **no desig.**
FPM seals for HETG, HEES, HEPG to VDMA 24568 and ISO 15380 = **E**

Constant action restrictor

Without restrictor = **no desig.**
Restrictor 0,3 dia. = **UD**

Spool types

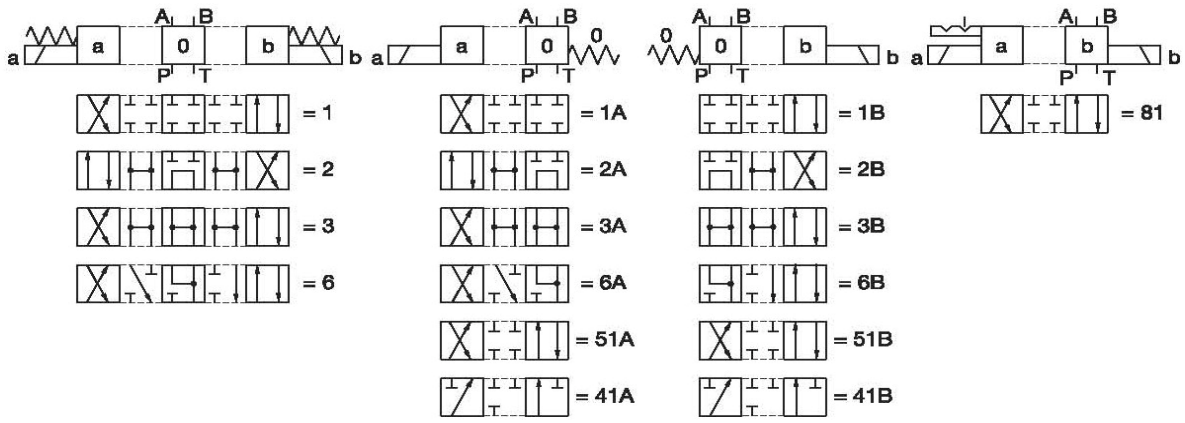

- Port T in the valves with spool type 41A and 41B to be used as lekage line.

Important note:
Valves with adjustment of the switching time - a constant or short - time static oil pressure of at least ≧ 4 bar must prevail at connection T of the directional control valve to maintain the pressure in the spring chambers.

TEL 0118 976 1616 FAX 0118 976 1626

back to content page

CETOP 7 VALVE TYPE KV-16

4/2, 4/3 -WAY DIRECTIONAL VALVES type KV

- NS-16
- to 350 bar
- to 300 l/min

- Indirect, solenoid, and mechanical (by lever) operation
- Connection diagram and connecting dimensions to ISO 4401
- Plug-in solenoid connector to ISO 4400
- Protection of solenoid IP 65 to DIN EN 60529
- Fulfil EMC (89/336/EEC)

KLADIVAR

KV-4/3-16-..

Description of operation

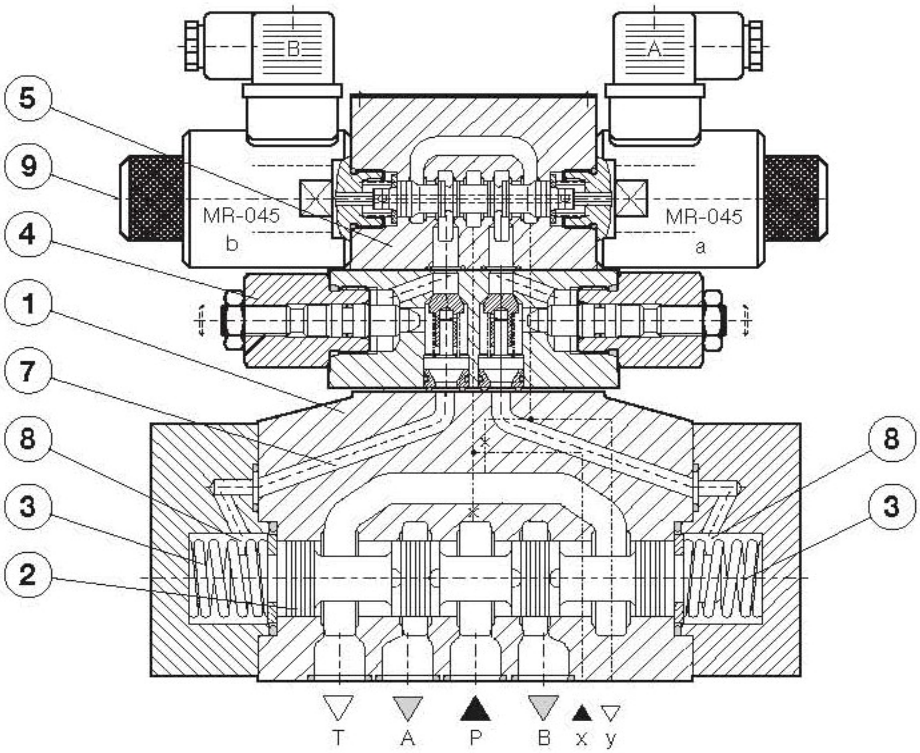

Directional valves type KV with indirect, solenoid-hydraulic operation control the hydraulic fluid flow direction.
These valves consist of the main valve (1), a control spool (2), two return springs (3) in 4/3-way valves and none in 4/2-way valves, a double throttle check/valve (4) and a pilot valve (5).
The pilot valve (5) is connected with the pressure chambers (8) via the pilot line (7). Feeding of the pilot valve oil is either or external (via the port "x"). Change-over of the control spool to one of the operating position is activated by the introduction of oil via the pilot valve (5) into one of the pressure chambers (8). A pressure rise in chambers provokes the movement of the control spool (2). Suitable links between ports A,B,P,T according to spool types are established as set forth in the table.
When the solenoid of the pilot valve (5) are de-energised a link between the pressure chamber (8) and the return line "y" for the pilot oil discharge is established. A pressure drop in the chamber actuates the main valve return spring (3) which automatically return the control spool to the neutral position.

Dischange of the return pilot oil from the pressure chambers is either internal or external (via the port "y").
Manual change-over of the main valve is also possible by pressing the emergency hand operator (9).
Indirect directional valves can also be provided with a manual pilot valve. These valves are manually operated by moving the operating lever.

Throttle

If the pilot oil supply rate (x) is greater than permissible a cartridge throttle shall be fitted into the P line of the directional valve.

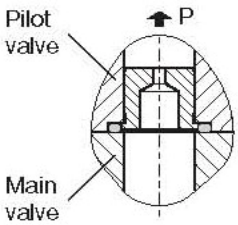

TEL 0118 976 1616 FAX 0118 976 1626

back to content page

CETOP 7 VALVE TYPE KV-16

Ordering code

KV - 4 / - 16 - - - *

- Number of control spool positions
- Spool type
- Pilot oil supply and discharge
- Supply voltage
- Plug in connector
- Pilot oil control with a double throttle valve
- Pilot oil control with pressure reducing valve
- Pre-load valve
- Throttle
- Seal type
- Special requirements to be briefly specified

Number of control spool position

two positions = **2**
three positions = **3**

Pilot oil supply and discharge

external x,y = **Z**
internal x,y = **N**
internal x, external y = **XN**
internal y, external x = **YN**

for supply and discharge with spool types 2 and 3, refer to the table of technical data

Supply voltage

direct voltage		alternating voltage	
24 V	= **no desig.**	12 V	= **12 AC**
12 V	= **12 DC**	24 V	= **24 AC**
48 V	= **48 DC**	48 V	= **48 AC**
110 V	= **110 DC**	110 V	= **110 AC**
230 V	= **230 DC**	230 V	= **230 AC** *

- Alternating voltage solenoids are fitted with a bridge rectifier.
- With solenoids of over 48 V an earthing clamp (⏚) to DIN EN 175301-8003 must be connected.

* To fulfil EMC (89/336/EEC) a capacitor must be built in (see 10.2.2)

Plug-in connector

without signal lamp = **no design**
with signal lamp = **L**

Pilot oil control with a double throttle valve

without a double throttle valve = **no desig.**
with a double throttle valve = **H**

Pilot oil control with pressure reducing valve

without pressure reducing valve = **no desig.**
with pressure reducing valve = **RT**

Pre-load valve

without pre-load valve = **no desig.**
with pre-load valve = **V**

Throttle

without throttle in "P" line = **no desig.**
throttle 0,8 mm dia = **D08**
throttle 1,0 mm dia = **D10**
throttle 1,2 mm dia = **D12**

Seal type

NBR seals for mineral oil HL, HLP, to DIN 51524 = **no desig.**
FPM seals for HETG, HEES, HEPG to VDMA 24568 and ISO 15380 = **E**

Spool types

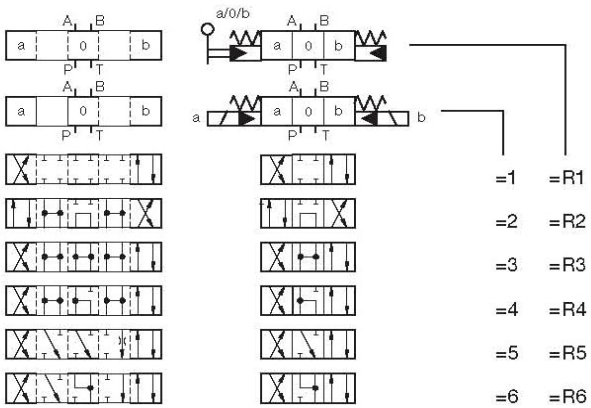

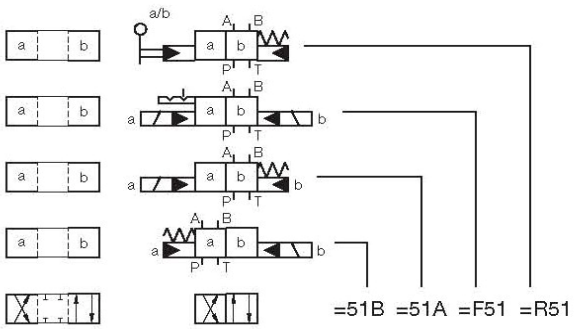

KLADIVAR

TEL 0118 976 1616 FAX 0118 976 1626

back to content page

CETOP 7 VALVE TYPE KV-16

Pre-load valve

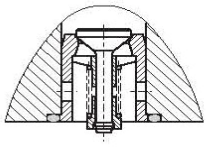

In valves with a low pressure bypass and internal pilot oil feed, minimum pilot pressure is obtained by installing a pre-load valve in the P-port of the main valve.
The cracking pressure is approx. 4,5 bar.

Symbol

◯ ... connection in line ⊗ ... no connection in line

Simplified symbol | Elaborated symbol | Simplified symbol | Elaborated symbol

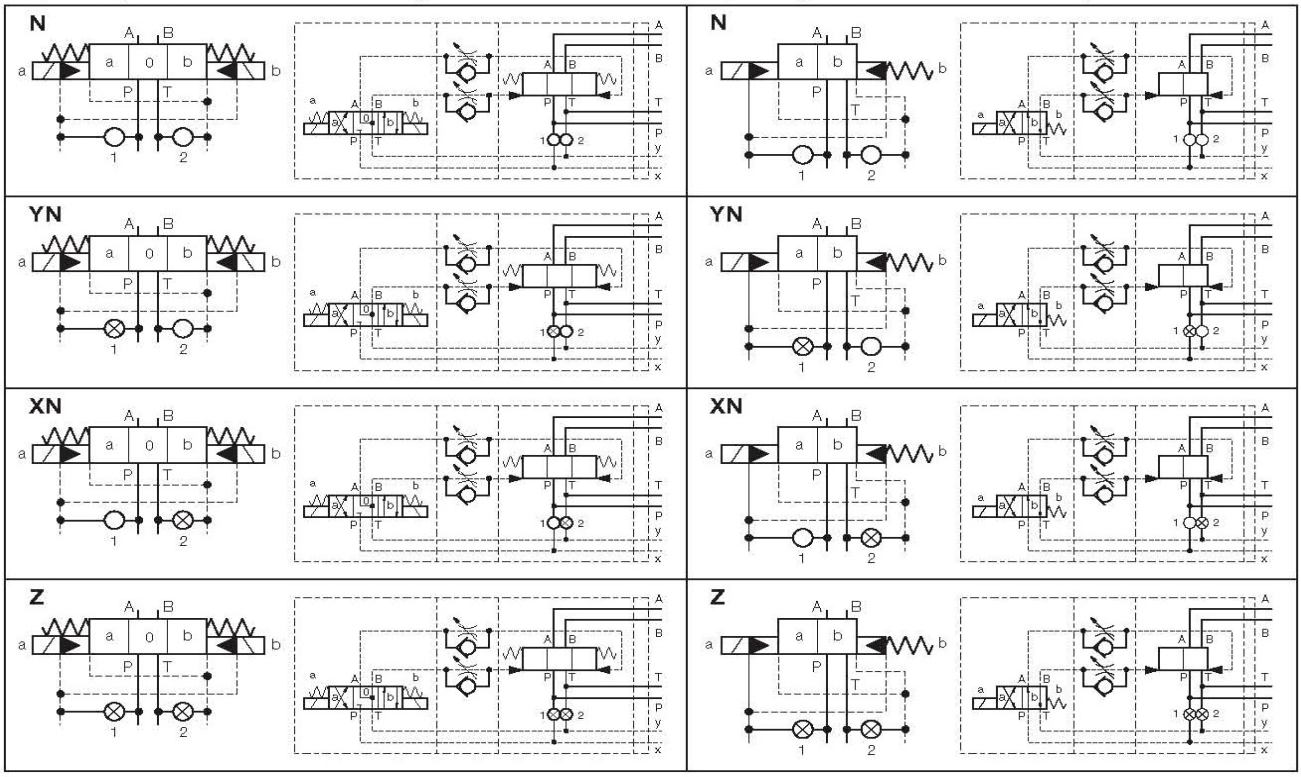

Technical data

Flow rate		l/min	300
Operating pressure	ports P, A, B port T	bar bar	350 210
Pilot oil pressure (x-external)		bar	50-250
Pilot oil pressure (x-internal) Pre-load valve is fitted into P-port of the main valve Without Pre-load valve in the P-port of the main valve	In valve types with internal pilot oil supply (x) the spool types 2, 3, and 4 are possible only when the oil flow in the direction from P towards T achieves the flow rate Q = 150 l/min, with the control spool in the centre position.		
Fluid temperature range		°C	-20 to +70
Viscosity range		mm^2/s	15 to 380
Required pilot oil volume	two-position valve three-position valve	cm^3	7,8 3,9
Mass	main valve 4/3 pilot valve 4/2 pilot valve throttle/check valve pressure reducing valve	kg	8 2,50 2,20 1,45 1,70
Mounting position	optional, horizontal for spool types 4/2		
Switch-on time Solenoid change-over from the centre to the operating position	three-position valve two-position valve	ms ms	60 85
Switch-off time Solenoid change-over from the operating to the centre position	three-position valve two-position valve	ms ms	45 50
Filtration		NAS 1638	8
Ambient temperature range		°C	to +150
Coil temperature range		°C	to +180
Power		W	29*
Voltage		V	≋12,24,48,110,230

The switch-on and switch-off times apply to 24 V DC solenoids.

* - 12 V supply voltage - 36 W

TEL 0118 976 1616 FAX 0118 976 1626

back to content page

OIL PILOT CETOP VALVES
TYPE KV-H

4/3 AND 4/2 PILOT-OPERATED DIRECTIONAL VALVE

- NS 6, 10
- to 350 bar
- to 80 l/min, to 130 l/min

- Direct hydraulically operation
- Connecting dimensions to ISO 4401
- Threaded connections to ISO 1179

KLADIVAR

KV-4/3-5KO-6-H, KV-4/3-5KO-10-H

TEL 0118 976 1616 FAX 0118 976 1626

Description of operation

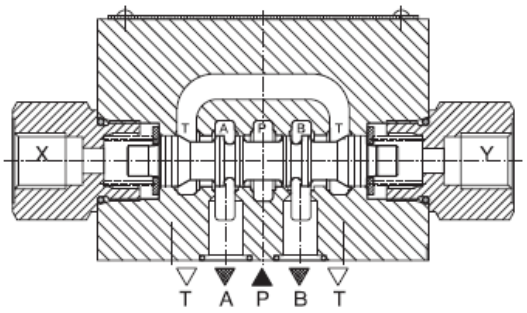

The KV-...-H is a hydraulically controlled 4/3 or 4/2 way directional control valve. The valve is operated by the pilots ports X and Y via the connection of an external pilot pipe direct on the valve body.

The minimum pilot pressure must be ensured for all operating conditions of the directional valve.

Ordering code

KV-4 / -5KO- -H51- - - -*

- Number of spool positions
- Size
- Hydraulically operated
- Spool type
- Throttle
- Seal type
- Special requirements to be briefly specified

Number of control spool position

two positions	= 2
three positions	= 3

Size

size 6	= 6
size 10	= 10

Throttle

without throttle in "P" line	= no desig.
throttle 0,8 mm dia	= D08
throttle 1,0 mm dia	= D10
throttle 1,2 mm dia	= D12

Seal type

NBR seals for mineral oil HL, HLP to DIN 51524	= no desig.
FPM seals for HETG, HEES, HEPG to VDMA 24568	= E

Spool types

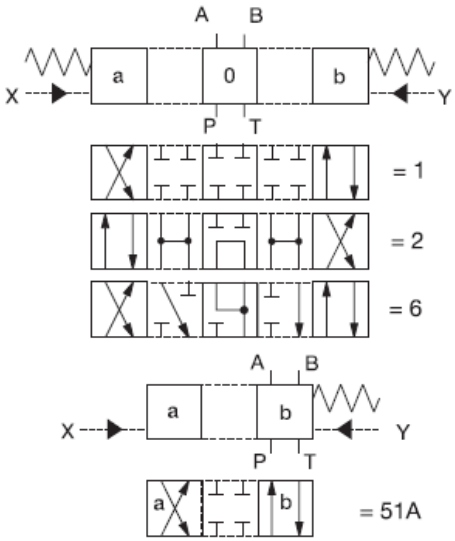

Technical data

Size			6	10
Flow rate		l/min	80	130
Operating pressure max.	ports A, B, P	bar	350	
	ports X, Y, T	bar	210	
Pilot supply pressure min.		bar	10	
Oil temperature range		°C	-20 to +70	
Viscosity range		mm²/s	15 to 380	
Mounting position		optional		
Mass		kg	1,4	4
Filtration		NAS 1638	8	

back to content page

LEVER OPERATED CETOP VALVES TYPE KV-R/RA

4/2, 4/3-WAY DIRECTIONAL VALVES

- NS 6, 10
- to 350 bar
- to 60 l/min, to 100 l/min
- Direct mechanical operation (by means of a lever)
- Connecting dimensions to ISO 4401

KLADIVAR

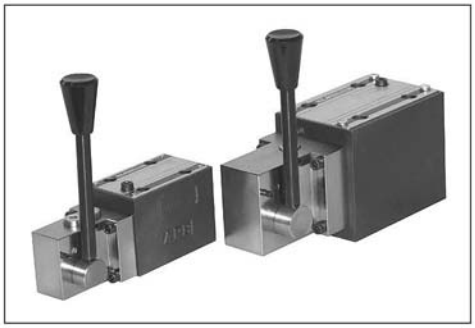

KV-4/3-5KO-6-R, KV-4/3-5KO-10-R

Description of operation

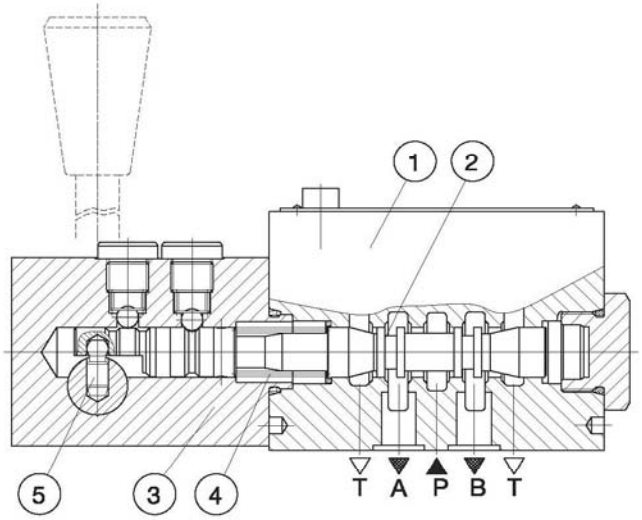

Directional valves type KV with direct mechanical operation by means of a lever control the direction of the hydraulic fluid medium flow.
These directional valves consist of a housing (1), control spool (2), control mechanism (3), and return spring (4). In 4/3-way directional valves the centre position of the control spool is the neutral position. The change-over to one of the operating positions "a" or "b" is done by moving the operating pin lever (5) in such a manner that its acts on the control spool (2) so as to clear corresponding flow ways and establish relevant links between ports, A, B, P, and T.
On ceasing to apply force to the control mechanism (3), the return spring (4) push the control spool into the neutral position.
There are two types of operation:
- with control spool not held in the operating position (the control spool returns to neutral position on ceasing to apply force to the control mechanism - type KV-../..-R)
- with control spool held (detent) in the operating position (the control spool remains in the operating position on ceasing to apply force to the control mechanism lever - type KV-../..-RA).

Ordering code

KV-4 / -5KO- - - - - - *

- Number of spool positions
- Size
- Control spool held (detent)
- Spool type
- Throttle
- Seal type
- Special requirements to be briefly specified

Number of control spool position

two positions	= 2
three positions	= 3

Size

size 6	= 6
size 10	= 10

Throttle

without throttle in "P" line	= **no desig.**
throttle 0,8 mm dia	= **D08**
throttle 1,0 mm dia	= **D10**
throttle 1,2 mm dia	= **D12**

Seal type

NBR seals for mineral oil HL, HLP to DIN 51524	= **no desig.**
FPM seals for HETG, HEES, HEPG to VDMA 24568 and ISO 15380	= **E**

Spool types

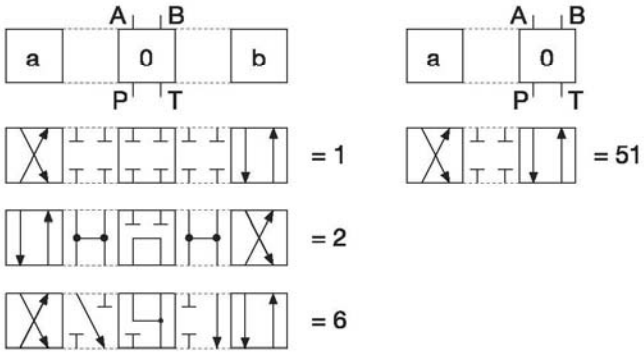

Control spool held

TEL 0118 976 1616 FAX 0118 976 1626

back to content page

CETOP MODULAR VALVES

Pressure Relief, Pilot Check, Flow Control, Overcentre, etc

PRESSURE RELIEF VALVE MODULE — TYPE VP-RT

Symbol

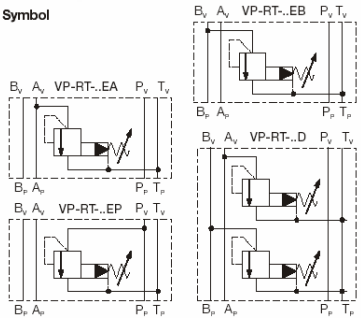

PILOT OPERATED RELIEF VALVES

STANDARD SPRING UP TO 315 BAR
LOWER SPRING UP TO 100 BAR IS AVAILABLE

CETOP 3 NG6 PART RE :	RELIEF IN PORT	MAX FLOW L/MIN	MAX PRESSURE BAR
VP-RT-6-EP	P	50	315
VP-RT-6-D	A & B	50	315
VP-RT-6-EA	A	50	315
VP-RT-6-EB	B	50	315

CETOP 5 NG10 PART RE :	RELIEF IN PORT	MAX FLOW L/MIN	MAX PRESSURE BAR
VP-RT-10-EP	P	100	315
VP-RT-10-EA	A	100	315
VP-RT-10-EB	B	100	315

FLOW CONTROL VALVE MODULE — TYPE VP-NDV

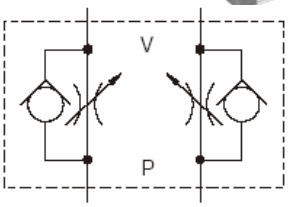

PART RE :	CETOP SIZE	MAX FLOW L/MIN	MAX PRESSURE BAR
VP-NDV-6-D	3 (NG6)	60	315
VP-NDV-10-D	5 (NG10)	100	315

KLADIVAR

PILOT OPERATED CHECK VALVE MODULE — TYPE VP-NOV

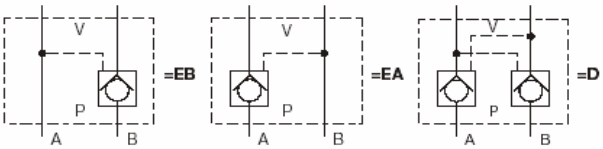

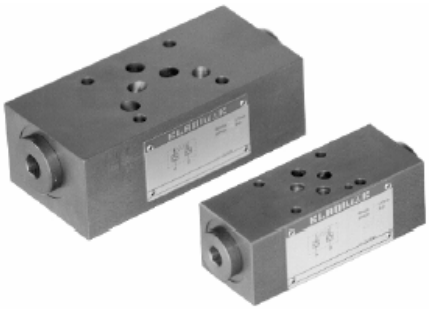

CRACKING PRESSURE
NG6 1 BAR
NG10 0.5 BAR

PILOT RATIO
NG6 1:3.9
NG10 1:3.6

CETOP 3 NG6 PART RE :	CHECK ON PORT	MAX FLOW L/MIN	MAX PRESSURE BAR
VP-NOV-6-D	A & B	60	315
VP-NOV-6-EA	A	60	315
VP-NOV-6-EB	B	60	315

CETOP 5 NG10 PART RE :	CHECK ON PORT	MAX FLOW L/MIN	MAX PRESSURE BAR
VP-NOV-10-D	A & B	60	315
VP-NOV-10-EA	A	60	315
VP-NOV-10-EB	B	60	315

TEL 0118 976 1616 FAX 0118 976 1626

back to content page

CETOP MODULAR VALVES

Pressure Relief, Pilot Check, Flow Control, Overcentre, etc

CHECK VALVE MODULE — TYPE VP-NV

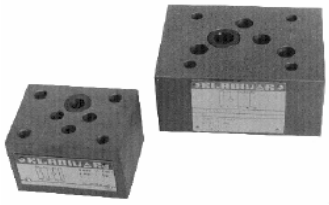

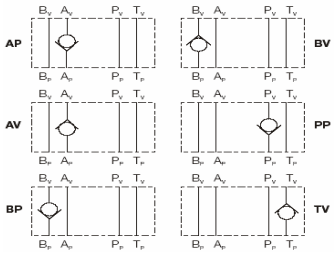

CRACKING PRESSURE 0.4 BAR

CETOP 3 NG6	CHECK IN PORT	MAX FLOW L/MIN	MAX PRESSURE BAR
VP-NV-6-PP	P	50	315
VP-NV-6-AP / AV	A	50	315
VP-RT-6-BP / BV	B	50	315
VP-RT-6-TV	T	50	315
CETOP 5 NG10	**CHECK IN PORT**	**MAX FLOW L/MIN**	**MAX VyPRESSURE BAR**
VP-NV-10-PP	P	100	315
VP-NV-10-AP / AV	A	100	315
VP-RT-10-BP / BV	B	100	315
VP-RT-10-TV	T	100	315

DUAL COUNTERBALLANCE VALVE CETOP 3 — TYPE VP-BZV

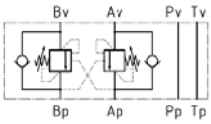

= DN

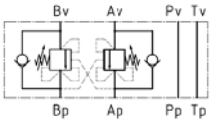

= DP

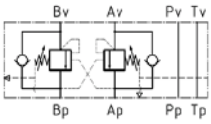

= DT

Part Number	MAX FLOW L/MIN	MAX PRES-SURE BAR	Adjustable Pressure range BAR	Pressure Increase per Turn (bar/turn)
VP-BZV-6-{DN/DP/DT}-20	30	350	100-210	109
VP-BZV-6-{DN/DP/DT}-35	30	350	200-350	137

PRESSURE SWITCHES — TYPE VP-TS-4-6

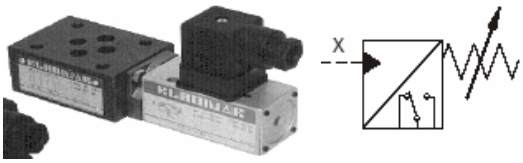

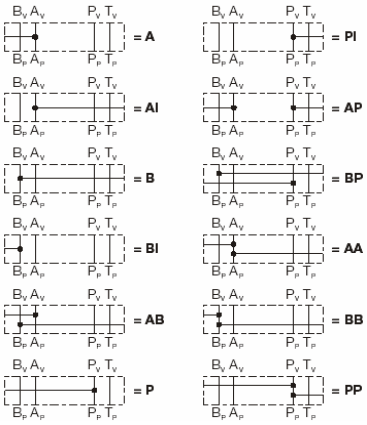

CETOP 3 NG6 PART RE :	PRESSURE RANGE BAR	MAX L/MIN	MAX PRESSURE BAR
VP-TS-4-6-70-* *	UP TO 70	60	400
VP-TS-4-6-160-* *	UP TO 160	60	400
VP-TS-4-6-250-* *	UP TO 250	60	400
VP-TS-4-6-400-* *	UP TO 400	60	400
CETOP 5 NG10 PART RE :	**PRESSURE RANGE BAR**	**MAX L/MIN**	**MAX PRESSURE BAR**
VP-TS-4-10-70-* *	UP TO 70	120	400
VP-TS-4-10-160-* *	UP TO 160	120	400
VP-TS-4-10-250-* *	UP TO 250	120	400
VP-TS-4-10-400-* *	UP TO 400	120	400

Standard Allen Key Adjustment , Rotary Knob and Lockable variations available, Please see page 14

TEL 0118 976 1616 FAX 0118 976 1626

back to content page

CETOP SUBPLATES
(Manifolds see pages 52 & 53)

CETOP SUBPLATE WITH PRESSURE RELIEF VALVE
STEEL OR ALUMINIUM TYPE PBC

STEEL

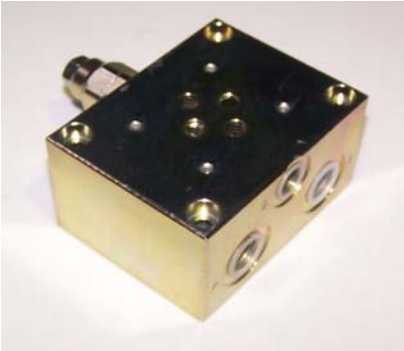

STEEL Part Number	FLOW LPM	CETOP SIZE	PRESSURE RANGE	SIDE A & B	BOTTOM P & T	Gauge Port
PBC3 X	40	3	5-100	3/8"	3/8"	1/4"
PBC3 U	40	3	50-230	3/8"	3/8"	1/4"
PBC3 K	40	3	100-350	3/8"	3/8"	1/4"
PBC5 X	80	5	5-100	1/2"	1/2"	1/4"
PBC5 U	80	5	50-230	1/2"	1/2"	1/4"
PBC5 K	80	5	100-350	1/2"	1/2"	1/4"

Various Spring Settings Available for the Pressure Relief Valve

P & T Ports on Bottom Face
A & B Ports on side face.
1/4" bsp Gauge Port

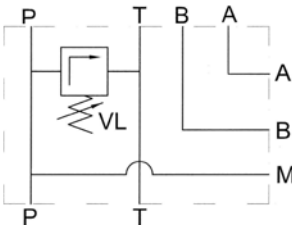

ALUMINIUM

ALUMINIUM Part Number	FLOW LPM	CETOP SIZE	PRESSURE RANGE	SIDE A & B	BOTTOM P & T	Gauge Port
BS3C1	40	3	5-100	3/8"	3/8"	1/4"
BS3C2	40	3	60-210	3/8"	3/8"	1/4"
BS3C3	40	3	150-300	3/8"	3/8"	1/4"
BS5C2	80	5	5-100	1/2"	1/2"	1/4"
BS5C3	80	5	50-150	1/2"	1/2"	1/4"
BS5C4	80	5	100-250	1/2"	1/2"	1/4"

CETOP 3 & 5 BLANKING PLATES TYPE ZP

CETOP BLANKING PLATES	CETOP SIZE
ZP-06	3
ZP-10	5

SEE PAGES 52 & 53

FULL RANGE OF CETOP 3, 5 & 7 STEEL MANIFOLDS

TEL 0118 976 1616 FAX 0118 976 1626

back to content page

CETOP 3 MANIFOLDS

MANUFACTURED TO CETOP STANDARDS IN STEEL

CETOP 3 (NG6) SIDE ENTRY	No of STATIONS	PORT CONFIGERATION	P& T PORTS	A & B PORTS
PP-KV-6-S-3/8"	1	SIDE	3/8"	3/8"
PP-KV-6-S-1/2"	1	SIDE	1/2"	1./2"
BP-6-2-S	2	SIDE	1/2"	3/8"
BP-6-3-S	3	SIDE	1/2"	3/8"
BP-6-4-S	4	SIDE	1/2"	3/8"
BP-6-5-S	5	SIDE	1/2"	3/8"
BP-6-6-S	6	SIDE	1/2"	3/8"
BP-6-7-S	7	SIDE	1/2"	3/8"
BP-6-8-S	8	SIDE	1/2"	3/8"
CETOP 3 (NG6) SIDE ENTRY	**No of STATIONS**	**PORT CONFIGERATION**	**P & T PORTS**	**A & B PORTS**
PP-KV-6	1	BOTTOM	3/8"	3/8"
PP-KV-6-1/2"	1	BOTTOM	1/2"	1/2"
BP-6-2	2	P & T SIDE A & B BOTTOM	1/2"	3/8"
BP-6-3	3	P & T SIDE A & B BOTTOM	1/2"	3/8"
BP-6-4	4	P & T SIDE A & B BOTTOM	1/2"	3/8"
BP-6-5	5	P & T SIDE A & B BOTTOM	1/2"	3/8"
BP-6-6	6	P & T SIDE A & B BOTTOM	1/2"	3/8"
BP-6-7	7	P & T SIDE A & B BOTTOM	1/2"	3/8"
BP-6-8	8	P & T SIDE A & B BOTTOM	1/2"	3/8"

SPECIAL APPLICATION MANIFOLDS DESIGNED AND MANUFACTURED.. PLEASE CONTACT US.....

TEL 0118 976 1616 FAX 0118 976 1626

back to content page

CETOP 5 & 7 MANIFOLDS
MANUFACTURED TO CETOP STANDARDS IN

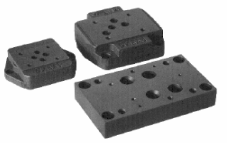

CETOP 5 MANIFOLDS FROM 1 TO 8 STATION TYPE PP / BP

SIDE ENTRY SUBPLATES	NUMBER OF STATIONS	PORT CONFIGERATION	P & T PORTS BSP	A & B PORTS BSP
PP-KV-10-S	1	SIDE	1/2"	1/2"
PP-KV-10-S-3/4"	1	SIDE	3/4"	3/4"
BP-10-2-S	2	SIDE	3/4"	1/2"
BP-10-3-S	3	SIDE	3/4"	1/2"
BP-10-4-S	4	SIDE	3/4"	1/2"
BP-10-5-S	5	SIDE	3/4"	1/2"
BP-10-6-S	6	SIDE	3/4"	1/2"
BP-10-7-S	7	SIDE	3/4"	1/2"
BP-10-8-S	8	SIDE	3/4"	1/2"
BOTTOM ENTRY SUBPLATES	**NUMBER OF STATIONS**	**PORT CONFIGERATION**	**P & t SIZE BSP**	**A & B PORTS BSP**
PP-KV-10	1	BOTTOM	1/2"	1/2"
PP-KV-10-3/4"	1	BOTTOM	3/4"	3/4"
BP-10-2	2	P & T SIDE A & B BOTTOM	3/4"	1/2"
BP-10-3	3	P & T SIDE A & B BOTTOM	3/4"	1/2"
BP-10-4	4	P & T SIDE A & B BOTTOM	3/4"	1/2"
BP-10-5	5	P & T SIDE A & B BOTTOM	3/4"	1/2"
BP-10-6	6	P & T SIDE A & B BOTTOM	3/4"	1/2"
BP-10-7	7	P & T SIDE A & B BOTTOM	3/4"	1/2"
BP-10-8	8	P & T SIDE A & B BOTTOM	3/4"	1/2"

CETOP 7 MANIFOLDS FROM 1 TO 8 STATION TYPE PP

CETOP 7 (NG16 SUBPLATES	No of STATIONS	PORT CONFIG.	BSP
PP-KV-16-R G3/4"	1	BOTTOM	3/4"
PP-KV-16-R G1""	1	BOTTOM	1"

TEL 0118 976 1616 FAX 0118 976 1626

back to content page

ELECTRIC CONTROL SYSTEMS

A full range of surface mount and full or part enclosure rocker switches, 1 way or 2 way function for CETOP applications with an Unloader valve.

STATIC OR SURFACE MOUNT

Enclosures for 1 - 5 rocker switches
Injection moulded from ABS for either partial or full surface mounting within an IP.65 enclosure with base and cable gland exit.

Partial surface mounting
Depth from face of enclosure to rear - 22mm
Protrusion of rocker switch at rear - 9mm

Single rocker switch 75mm x 75mm
Two rocker switch 75mm x 110mm
Three rocker switch 75mm x 145mm
Four rocker switch 75mm x 180mm
Five rocker switch plate 75mm x 215mm

4 x 3mm dia. Fixing holes
4 x 8.5mm dia. Fixing holes

Full enclosure, including base
Depth from front of enclosure to rear 54mm
Including rocker switch 65mm
4 x Stainless steel screws + 4 x Fixing holes

WANDER LEAD CONTROL

The controllers come with an emergency stop button and are IP65 rated which makes them ideal for mobile applications.

The switch gear is 2 position as standard allowing the operator to activate 2 functions with one button. This is ideal for operating power packs with Cetop 3 valves fitted.

The casing is produced from a high impact resistant plastic, making the unit robust in construction.

We can also supply 7 pin plugs and sockets. When supplied with our kits we can pre-wire the controller to save time.

LEVER SWITCHES

KRSS-CO10 Switches will fit onto standard 10mm threaded Control valve lever to enable switch to function Electric Changeover or Diverter valve Single or two button option available

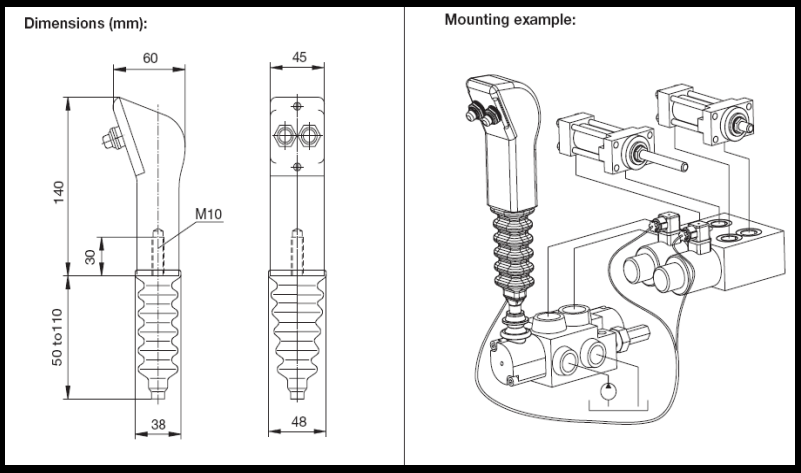

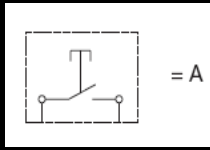

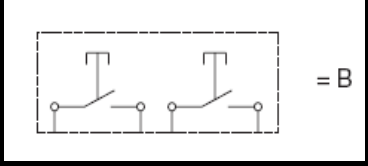

TEL 0118 976 1616 FAX 0118 976 1626

back to content page

RADIO CONTROL SYSTEMS

HAND HELD RADIO CONTROL SYSTEM UP TO 10 FUNCTIONS

The System can be pre programmed to enable timeouts, etc

Example of a basic two button system which incorporates an emergency stop and an added facility of a membrane Switching system integrally mounted into the receiver box lid

Pre Wired Receiver

Dual function switching for an Unloader Valve or Electric Motor start

Hand held rubber control with choice of labelling options

An adjustable mounting bracket for the control is also available

RC400 SCANRECO SYSTEM

Up to 8 Paddle Levers or 3 Joysticks,
Toggle
Switches and Push Buttons

Option of 8 Proportional Outputs

Visual Signal feedback by LED Display

Several Analog Input/Outputs

Turn Potentiometers and Multi position Switches

Range up to 200 Metres

IP67 Rated
(Seawater resistant)

TEL 0118 976 1616 FAX 0118 976 1626

back to content page

HAND PUMPS
Industrial Application

GASPARINI HAND PUMPS ARE SUITED FOR VARIOUS INDUSTRIAL APPLICATIONS WITH DISPLACEMENTS 18 cc UP TO 111 cc

DOUBLE STROKE FUNCTION HAND PUMP — TYPE GL

TIPO-TYPE	A	B	C	D	E	F	G	H	I	L	M
GL 20-25-28-30-35	67	120	66	95	3/8"gas	1/2"gas	11	63	68	89	285
GL 40-45	71	137	71	102	1/2"gas	1/2" gas	11	73	71	104	295

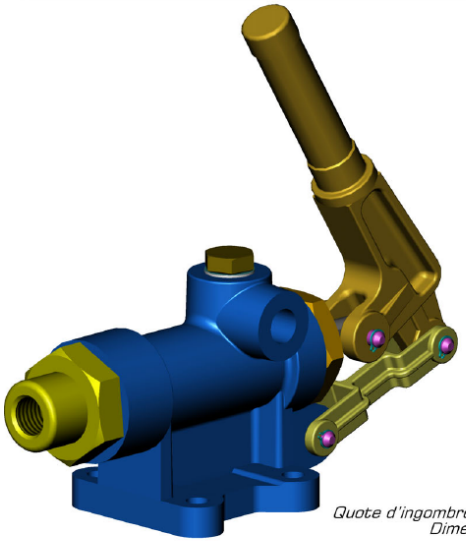

TIPO-TYPE	PORTATA Cc DELIVERY Cc	PRESSIONE Bar PRESSURE Bar
GL 20	18	460
*GL 25	29	320
GL 28	36	250
GL 30	42	220
*GL 35	57	160
*GL 40	87	120
*GL 45	111	90

** Approvazione Ministero della Marina Mercantile Decreto Ministeriale 47/1988 e 48/1988 Riconoscimento R.I.N.A 17874*

** Authorized by the Italian Ministry of Mercantile Marine with Nr. 47/1988 and 48/1988 - Authorized Italian Navy Register (RINA) Nr. 17874*

Quote d'ingombro non impegnative. La ditta si riserva di apportare modifiche senza preavviso. Dimensions not binding. Modifications reserved without prior notice.

DOUBLE STROKE FUNCTION HAND PUMP — TYPE GLR

TIPO-TYPE	PORTATA cm^3 DELIVERY cm^3	PRESSIONE Bar PRESSURE Bar
GLR 20	18	460
GLR 25	29	320
GLR 28	36	250
GLR 30	42	220

Disponibile anche con serbatoio 4L (mod. GLB20-30)
Also avaiable with 4L. tank (mod. GLB20-30)

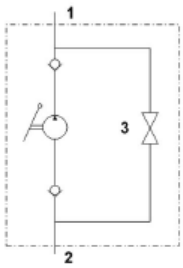

Peso - Weight Kg. ~6,3 - 6,5

1 Mandata - Pressure port
2 Aspirazione - Suction
3 Volantino di scarico - Release handknob

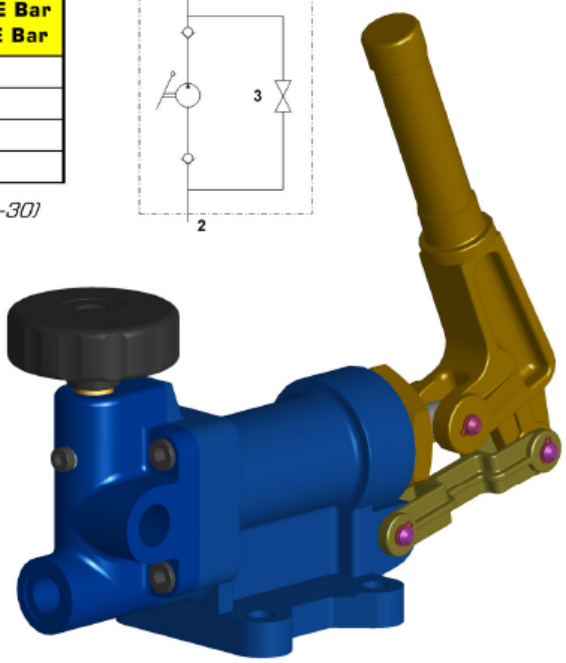

Quote d'ingombro non impegnative. La ditta si riserva di apportare modifiche senza preavviso.

Dimensions not binding. Modifications reserved without prior notice.

TEL 0118 976 1616 FAX 0118 976 1626

back to content page

HAND PUMPS
Industrial Application

SINGLE ACTING PUMP WITH RELIEF VALVE — TYPE GLDV

TIPO-TYPE	A	B	D	E	F	G	H	I	L	M	N	O
GLDV 20-25-28-30-35	90	75	66	95	48	67	1,2"gas	68	46	63	89	285
GLDV 40-45	100	79	71	102	52	71	1,2" gas	71	56	73	104	295

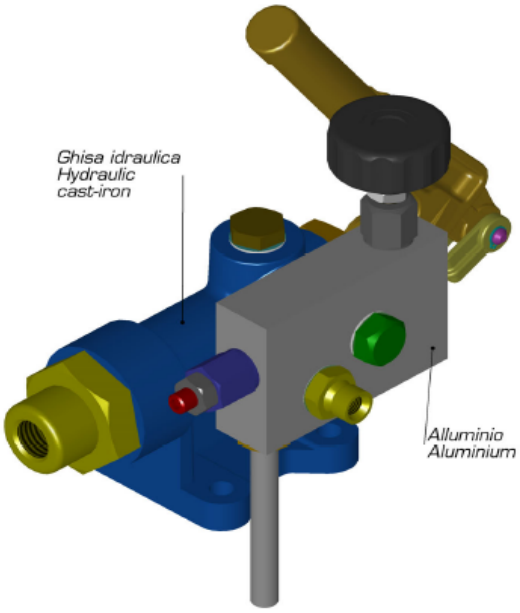

TIPO-TYPE	PORTATA cm^3 DELIVERY cm^3	PRESSIONE Bar PRESSURE Bar
GLDV 20	18	460
GLDV 25	29	320
GLDV 28	36	250
GLDV 30	42	220
GLDV 35	57	160
GLDV 40	87	120
GLDV 45	111	90

Peso - Weight Kg. 6.7-8

1 Mandata - Pressure Port
2 Aspirazione - Suction
3 Volantino di scarico - Release handknob
4 Registro Max. pressione - Max pressure setting
5 Sarico per serbatoio - Tank port

Quote d'ingombro non impegnative.
La ditta si riserva di apportare modifiche senza preavviso.

Dimensions not binding.
Modifications reserved without prior notice.

SINGLE ACTING PUMP WITH TANK — TYPE GLB

Peso - Weight ~11Kg

1 Mandata - Pressure Port
2 Serbatoio L 4 - Tank L 4
3 Volantino Di Scarico - Release Handknob
4 Indicatore Livello Olio - Oil Level Indicator
5 Tappo Scarico Olio 1/2"G - Oil Discharge Plug 1/2"G
6 Tappo carico olio 1-2"G- filler plug 1/2"G

TIPO-TYPE	PORTATA cm^3 DELIVERY cm^3	PRESSIONE BAR PRESSURE BAR
GLB 20	18	460
GLB 25	29	320
GLB 28	36	250
GLB 30	42	220

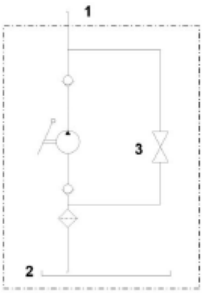

Montaggio - Mounting Position:

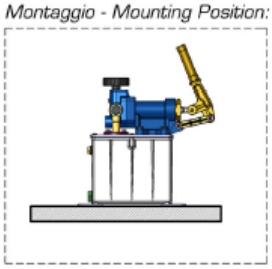

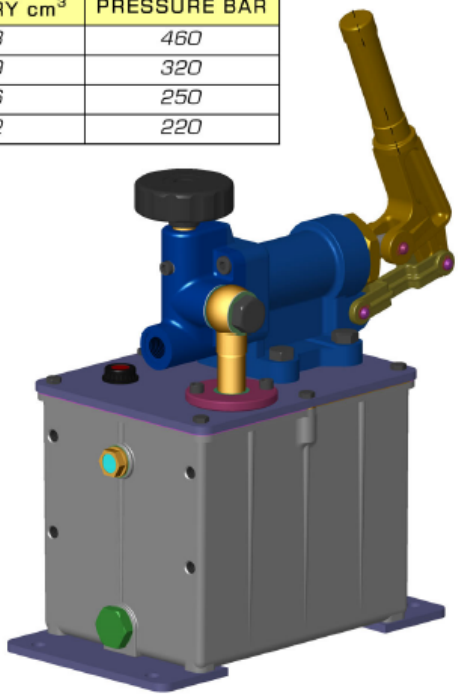

Quote d'ingombro non impegnative.
La ditta si riserva di apportare modifiche senza preavviso.

Dimensions not binding.
Modifications reserved without prior notice.

STANDARD TANK SIZE IS 4 LITRE, OTHER SIZES AVAILABLE FROM STOCK

TEL 0118 976 1616 FAX 0118 976 1626

back to content page

HAND PUMPS
Industrial Application

DOUBLE ACTING CHANGEOVER VALVE TYPE GL4VN

CONVERTS PUMP TYPES GL & GLAN

4-Way-diverter valve for the control of double acting cylinders; with modifications also avaible for nearly all other pump models.

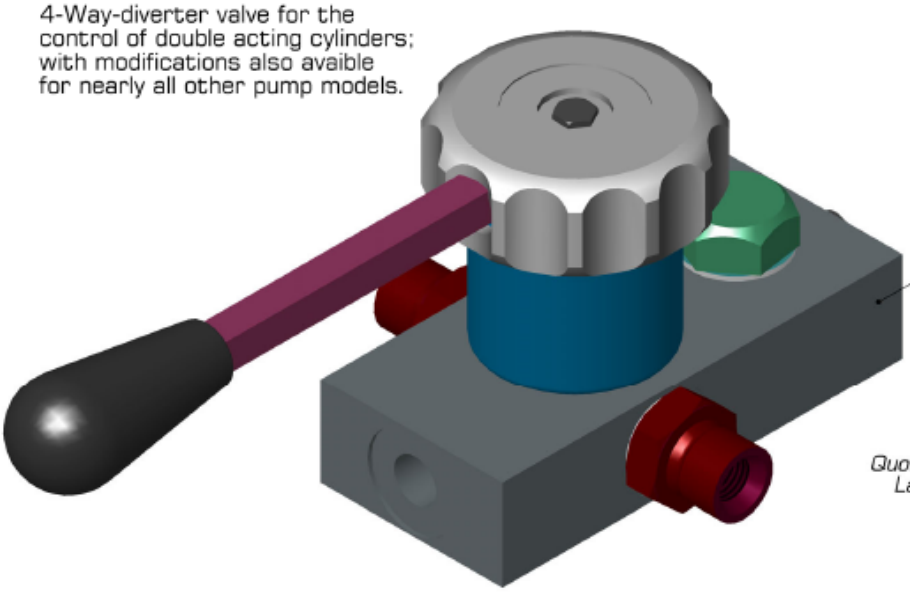

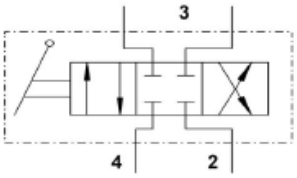

Quote d'ingombro non impegnative.
La ditta si riserva di apportare modifiche senza preavviso.
Dimensions not binding.
Modifications reserved without prior notice.

FOOT OPERATED PUMP TYPE GLAPN

Peso (senza olio)
(Kg versione in alluminio ~5 Kg)
Weight (without oil) Kg. 8,3
(alluminium version ~5 Kg)

TIPO-TYPE	PORTATA cc DELIVERY cc	PRESSIONE Bar PRESSURE Bar
GLAPN16	3,2	250
GLAPN20	5	160
GLAPN25	7,5	100

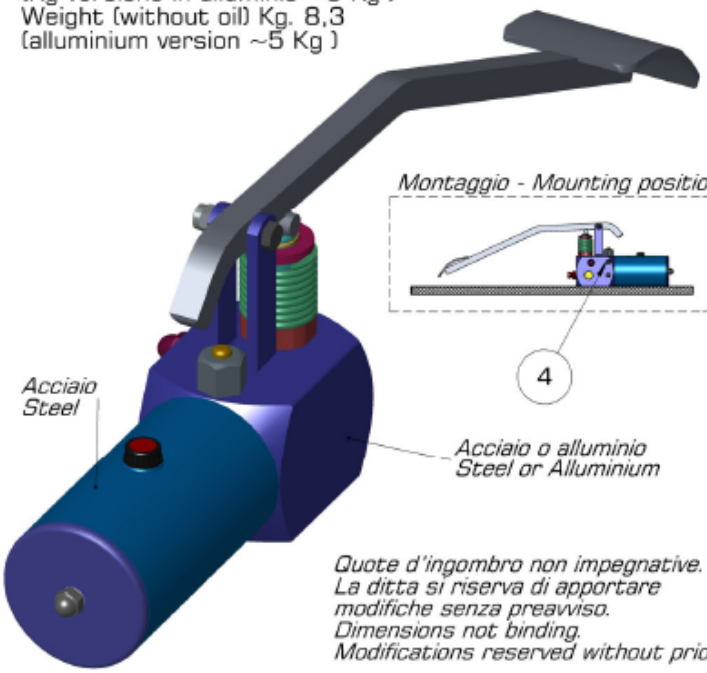

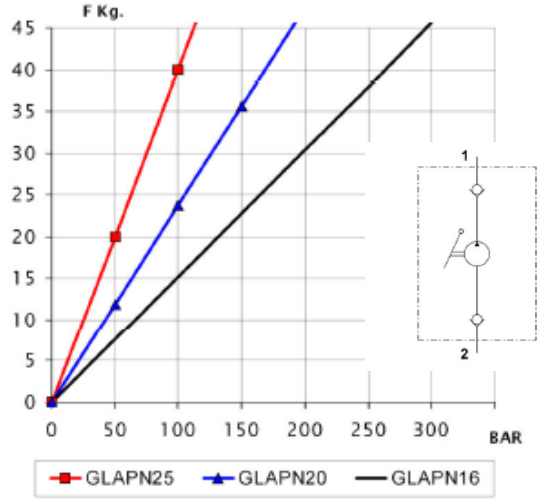

Quote d'ingombro non impegnative.
La ditta si riserva di apportare modifiche senza preavviso.
Dimensions not binding.
Modifications reserved without prior notice.

TEL 0118 976 1616 FAX 0118 976 1626

back to content page

HAND PUMPS
Industrial Application

DOUBLE ACTING PUMP WITH TANK TYPE

Pompa Tipo GL290 - Pump Type GL290

Funzionamento a doppio effetto con invertitore incorporato per comando cilindro doppio effetto.
Double-Stroke function with flow diverter included, for double-stroke function cylinders

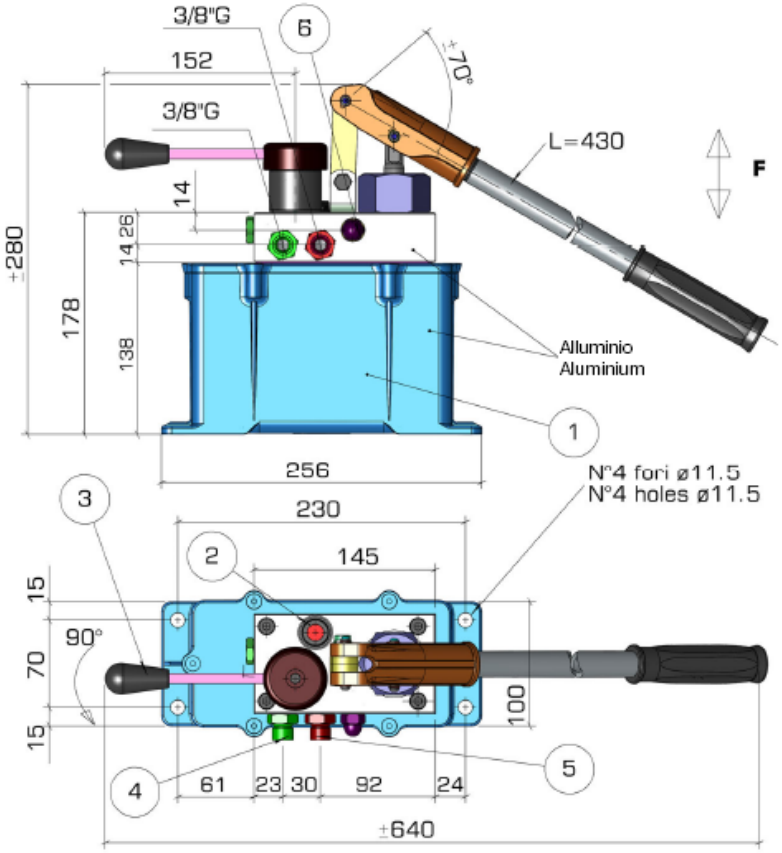

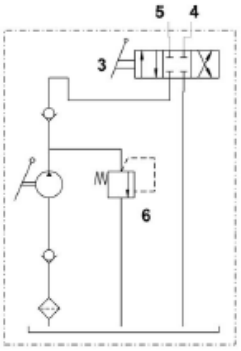

Peso (senza olio)
Weight (without oil) Kg. ~6-6,5

1 Serbatoio L 2,2-Tank L 2,2
2 Tappo Carico olio-Filler Plug
3 Leva Inversione Flusso Olio - Oil Flow Diverter Lever
4 Mandata 1-Pressure Port 1
5 Mandata 2-Pressure Port 2
6 Valola Di Max Pressione - Pressure relief valve setting

Disponibile con serbatoio 4L.
Avaiable also with 4 L. tank.

TIPO-TYPE	PORTATA cm^3 DELIVERY cm^3	PRESSIONE Bar PRESSURE Bar
GL290-17	11	380
GL290-20	16	280
GL290-25	25	180
GL290-28	32	150
GL290-35	50	100

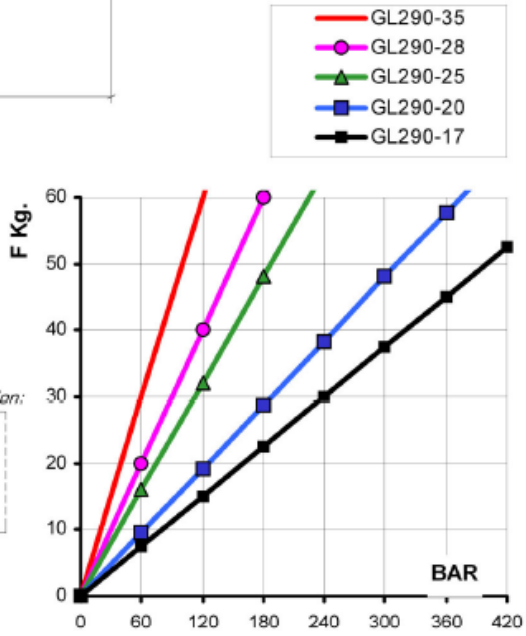

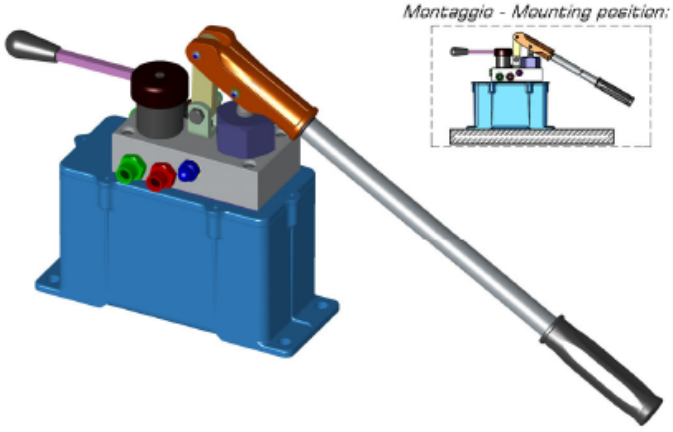

Montaggio - Mounting position:

Quote d'ingombro non impegnative.
La ditta si riserva di apportare modifiche senza preavviso.

Dimensions not binding.
Modifications reserved without prior notice.

TEL 0118 976 1616 FAX 0118 976 1626

back to content page

HAND PUMPS
Agricultural Application

DOUBLE & SINGLE ACTING PUMP WITH TANK
DOUBLE STROKE FUNCTION

DOUBLE EFFET
DOUBLE ACTING
DOPPELT WIRKEND

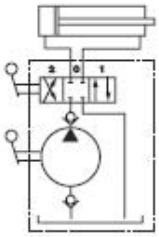

SIMPLE EFFET
SINGLE ACTING
EINFACH / WIRKEND

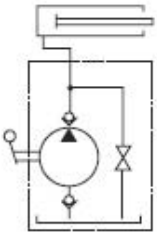

Multiposition

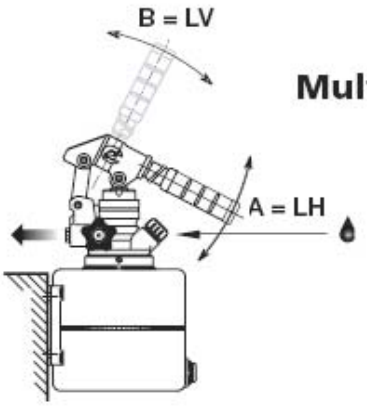

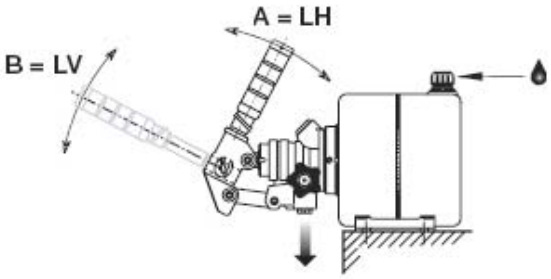

TEL 0118 976 1616 FAX 0118 976 1626

back to content page

HAND PUMPS
Agricultural Application

Various displacements, pressures and tank sizes.
Vertical or horizontal mounting
A weldable collar is also available

TEL 0118 976 1616 FAX 0118 976 1626

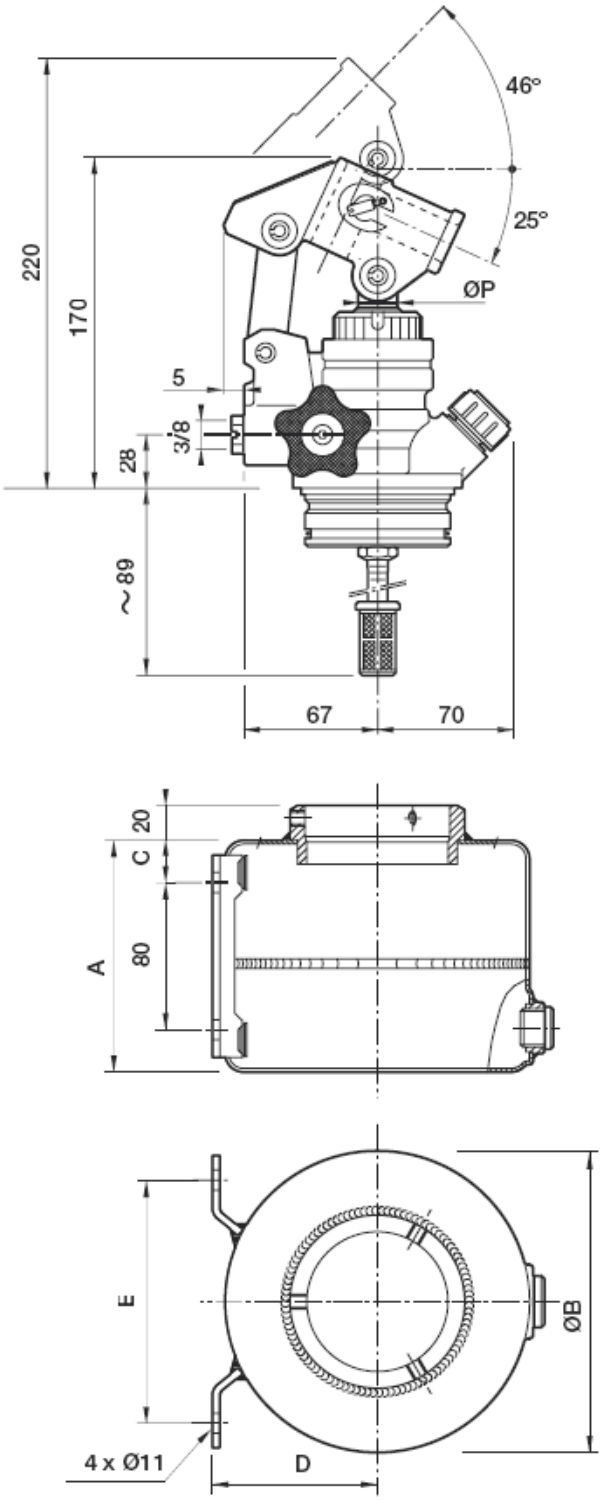

POMPE *PUMP* PUMPE	REF. ARTIKEL	Ø P	Pression Pressure Druck Max. (bar)	Débit Displacement Leistung (cm3)	Poids Weight Gewicht (Kg)
Simple effet Single acting Einfachwirkend	P12S	12	300	8	3.1
	P16S	16	200	15	3.1
	P20S	20	150	20	3.2
	P1230S	12/30	300/50	5/25	3.4
	*P25 SDA	16	120	30	3.2
	*P20 SDA	14	160	20	3.2
Double effet Double acting Doppeltwirkend	P16D	16	200	15	3.2
	P20D	20	150	20	3.2
	*P25 DDA	16	150	30	3.3

* Pompe à double course / *Pump with double stroke* / Pumpe mit doppelhub

RESERVOIR - TANK

REF. ARTIKEL	A	B	C	D	E	Vol. (Ltr)	Poids Weight Gewicht (Kg)
RP 1	166	89	27	50	135	1	2.2
RP 2	126	164	21	84	170	2	2.3
RP 4	169	184	36	96	170	4	3
RP 6	205	205	36	108	170	6	4.1
RP 8	225	225	36	120	170	8	5.1
RP 4C	168	⌀168	36	96	170	4	3.1

LEVIER - *LEVER* - HEBEL

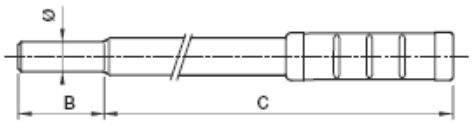

REF ARTIKEL	A	B	C	Poids *Weight* - Gewicht (kg)
LEV/PM	20	45	500	0.7

BAGUE A SOUDER
RING TO BE WELDED
RING ZUM ANSCHWEIßEN

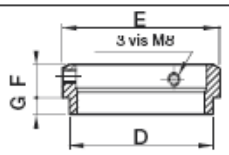

REF ARTIKEL	D	E	F	G	Poids *Weight* - Gewicht (gr)
JRPK	86	94	20	10	400

back to content page

CARTRIDGE HAND PUMPS

Le pompe a mano a cartuccia di norma vengono utilizzate come emergenza in piccoli impianti.

Cartridge hand pumps are generally used in small applications as emergency.

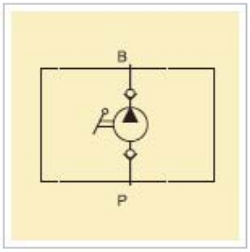

3/4-16 UNF

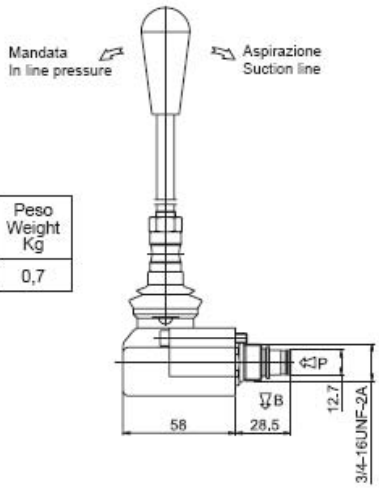

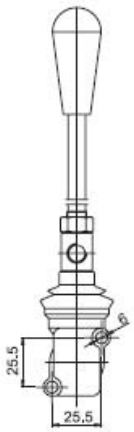

La pompa è comprensiva di leva di azionamento standard L=200
Pump is equipped with standard L=200 lever

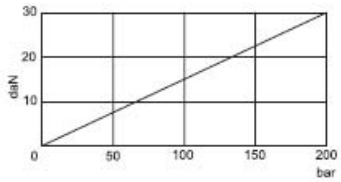

Caratteristiche tecniche
Features

Portata Max Max flow l/min	Pressione Max Max pressure bar	Peso Weight Kg
2 cm³	200	0,7

Codice di ordinazione
Ordering code

PME6

Blocco con pompa a mano
Manifold with cartridge hand pump

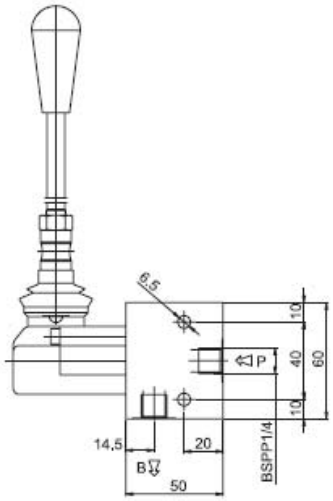

Codice di ordinazione
Ordering code

PME6140

BSPP 1/4

Dimensione
Size

TEL 0118 976 1616 FAX 0118 976 1626

VARIOUS OTHER TYPE OF HAND PUMPS AND JACK LEGS ARE AVAILABLE PLEASE CONTACT US….

back to content page

GEAR PUMPS
Group 1

Group 1 Medium Pressure up to 175 bar

GROUP 1	027	036	048	060	072	084	096	12
Capacity cc/rev	1.22	1.63	2.18	2.72	3.27	3.81	4.36	5.7
Max Working Pressure (bar)	175	175	175	175	175	140	125	125
Peak Pressure (bar)	200	200	200	200	200	170	150	150
Min. Speed (rpm)	650	650	650	650	650	650	650	650
Max. Speed (rpm)	3500	3500	3500	3500	3500	3500	3500	3500

Group 1 High Pressure up to 250 bar.

GROUP 1 Displacement	Displacement cc/rev	Flow (LPM) @ 1500 rpm	Max Pressure Bar	Max Speed rpm	Inlet Port	Outlet Port
10A(C) 1	1	1.40	250	3500	3/8"	3/8"
10A(C) 1.25	1.25	1.74	250	3500	3/8"	3/8"
10A(C) 1.6	1.6	2.23	250	3500	3/8"	3/8"
10A(C) 2	2	2.82	250	3500	3/8"	3/8"
10A(C) 2.5	2.5	3.53	250	3500	3/8"	3/8"
10A(C) 3.15	3.15	4.44	250	3500	1/2"	3/8"
10A(C) 3.65	3.65	5.15	250	3500	1/2"	3/8"
10A(C) 4.2	4.2	5.92	250	3500	1/2"	3/8"
10A(C) 5	5	7.05	250	3000	1/2"	3/8"
10A(C) 5.7	5.7	8.12	200	3000	1/2"	3/8"
10A(C) 6.1	6.1	8.69	200	2500	1/2"	3/8"
10A(C) 7.4	7.4	10.55	180	2500	1/2"	3/8"
10A(C) 8.5	8.5	12.11	150	2000	1/2"	3/8"
10A(C) 9.8	9	13.97	120	2000	1/2"	3/8"

Ordering Code

PUMP TYPE	ROTATION	CC/ REV	FLANGE TYPE	SHAFT	PORTS
MP1 = LOW PRESSURE HP1 = HIGH PRESSURE	C = CLOCKWISE A = ANTI CLOCK WISE	cc	4 (4 BOLT) 2 (2 BOLT)	8 =1:8 TAPER 5 =1:5 TAPER P =PARALLEL S =9 TOOTH SPLINE	G = BSP F = FLANGED
Example..... *HP1*	*C*	*1.6*	*4*	*8*	*G*

TEL 0118 976 1616 FAX 0118 976 1626

back to content page

GEAR PUMPS
Group 2

MEDIUM PRESSURE CAPRONI GEAR PUMPS

From 4.5 cc/rev up to 19 cc/rev. All Shaft, Flange and Port configurations. Tandem and Triple Pumps available.

TYPE GROUP 2	10	14	18	25	33	42
Capacity cc/rev	4.5	6.3	8.2	11.3	15	19
Max Working Pressure @ 1500 rpm	175	175	175	175	140	105
Peak Pressure (bar) @ 1500 rpm	200	200	200	200	170	130
Minimum Speed r.p.m.	650	650	650	650	650	650
Maximum Speed r.p.m.	3500	3500	3500	3500	3500	3500

Ordering Code

PUMP TYPE	ROTATION	Type	FLANGE TYPE	SHAFT	PORTS
MP2	C = CLOCKWISE A = ANTI CLOCK WISE	Size Of pump	4 (4 BOLT) 2 (2 BOLT)	8 =1:8 TAPER 5 =1:5 TAPER P =PARALLEL S =9 TOOTH SPLINE	G = BSP F = FLANGED
Example.....					
MP2	*C*	*10*	*4*	*8*	*G*

TANDEM AND TRIPLE PUMPS ARE AVAILABLE PLEASE CONTACT US WITH YOUR REQUIREMENT...

TEL 0118 976 1616 FAX 0118 976 1626

back to content page

GEAR PUMPS
Group 2

HIGH PRESSURE PETRONE ITALIAN GEAR PUMPS

From 4 cc/rev up to 26 cc/rev.
All pumps can be used as uni-directional Gear Motors.
Each pump can be connected to make Tandem or Triple pumps.
Low noise generation due to unique Drive Gears

TYPE GROUP 2	PNP 4	PNP 6	PNP 8	PNP 11	PNP 14	PNP 16	PNP 20	PNP 26
Capacity cc/rev	4	6	8	11	14	16	20	26
Max Working Pressure @1500 rpm	280	270	270	270	260	250	230	190
Peak Pressure (bar) @ 1500 rpm	310	310	310	310	300	290	250	220
Minimum Speed r.p.m.	600	600	600	600	500	500	500	400
Maximum Speed r.p.m.	4000	3500	3500	3500	3000	3000	3000	3000

Ordering Code

CODE	ROTATION	SIZE	SHAFT	FLANGE type	PORTS
PNP2	D = CLOCKWISE S = ANTI CLOCK WISE	CC	C001 (1:8 TAPER) C002 (1:5 TAPER) SC01 (DIN5482 9T SPLINE) SC02 (SAE A 9 TOOTH SPLINE) SC03 (SAE A 11 TOOTH SPLINE) CI01 (15mm PARALLEL CI01 (15.85 mm SAE A PARALLEL) SC04 (10 TOOTH SPLINE 16/32 DP) SC05 (11 TOOTH SPLINE 16/32 DP)	01 = 4 BOLT 02 = SAE A 2 BOLT 03 = BOSCH 4 BOLT	A = BSP B = FLANGED

Example.....

PNP2	*D*	*11*	*C001*	*01*	*A*

TEL 0118 976 1616 FAX 0118 976 1626

GEAR PUMPS
Group 3

MEDIUM & HIGH PRESSURE CAPRONI GEAR PUMPS

From 20 cc/rev up to 55 cc/rev.

Group 3 Medium Pressure up to 200 bar

Part Re	Displacement cc/rev	Flow (LPM) @ 1500 rpm	Max Pressure Bar	Max Speed rpm	Inlet Port	Outlet Port
MP30 A(C) 20	20	30	200	2500	3/4"	3/4"
MP30 A(C) 22.5	22.5	33.75	200	2500	3/4"	3/4"
MP30 A(C) 25	25	37.5	200	2500	3/4"	3/4"
MP30 A(C) 32	32	48	200	2500	1"	3/4"
MP30 A(C) 36	36	54	190	2300	1"	3/4"
MP30 A(C) 42	42	63	190	2300	1"	3/4"
MP30 A(C) 46	46	69	190	2100	1"	3/4"
MP30 A(C) 50	50	75	175	2100	1"	3/4"
MP30 A(C) 55	55	82.5	175	1750	1"	3/4"

Group 3 High Pressure up to 250 bar. Cast Iron End Covers

Part Re	Displacement cc/rev	Flow (LPM) @ 1500 rpm	Max Pressure Bar	Max Speed rpm	Inlet Port	Outlet Port
HP30 A(C) 20	20	30	250	2500	3/4"	3/4"
HP30 A(C) 22.5	22.5	33.75	250	2500	3/4"	3/4"
HP30 A(C) 25	25	37.5	250	2500	3/4"	3/4"
HP30 A(C) 32	32	48	250	2500	1"	3/4"
HP30 A(C) 36	36	54	150	2300	1"	3/4"
HP30 A(C) 42	42	63	230	2300	1"	3/4"
HP30 A(C) 46	46	69	230	2100	1"	3/4"
HP30 A(C) 50	50	75	200	2100	1"	3/4"
HP30 A(C) 55	55	82.5	200	1750	1"	3/4"

Ordering Code

PUMP TYPE	ROTATION	CC/ REV	FLANGE TYPE	SHAFT	PORTS
MP30 = LOW PRESSURE HP30= HIGH PRESSURE	C = CLOCKWISE A = ANTI CLOCK WISE	cc	4 (4 BOLT) 2 (2 BOLT)	8 =1:8 TAPER 5 =1:5 TAPER P =PARALLEL S =9 TOOTH SPLINE	G = BSP F = FLANGED
Example.....					
HP30	*C*	*32*	*4*	*8*	*G*

TEL 0118 976 1616 FAX 0118 976 1626

back to content page

GEAR PUMPS
Group 3.5/4

HIGH PRESSURE Group 3.5/4 GEAR PUMPS

From 53.3 cc/rev up to 150 cc/rev.
Pumps supplied with Cast Iron end covers and Flange Ports

Group 3.5/4 High Pressure up to 250 bar

Part Re	Displacement cc/rev	Flow (LPM) @ 1500 rpm	Continuous Pressure Bar	Max Int. Pressure Bar	Max Speed rpm
1PLC80	53.3	79.95	225	250	3000
1PLC100	66.5	99.75	225	250	3000
1PLC125	83.3	124.95	225	250	3000
1PLC150	100	150	225	250	3000
1PLC175	116.6	174.9	225	250	2500
1PLC200	133.3	199.95	200	225	2000
1PLC225	150	225	175	200	1750

Ordering Code

PUMP TYPE	ROTATION	SHAFT	FLANGE TYPE
1PLC80...100 ...125...150 ...175...200 ...225	D = CLOCKWISE I = ANTI CLOCK WISE R= REVERSIBLE	E =1:8 TAPER GROUP 3.5 J = 1.8 TAPER GROUP 4 G = 14 TOOTH SPLINE SAE C C = 28mm PARALLEL (UP TO 100CC) 30mm Parallel (175-225 cc Pumps	10 =4 BOLT GROUP 3.5 23 = 4 BOLT GROUP 4 09 = SAE C 2 BOLT

Example.....

1PLC *D* *E* *10*

GEAR PUMP BEARING SUPPORTS

Flange connected directly to the Pump they protect the shafts of Pumps and Motors
from high Radial Loads.

Part Number	Pump Size	Support Shaft	Key
BS/U1P	Group 1	18 mm PARALLEL	A25x6x6
BS/U1PC	Group 1	1:8 TAPER	4 mm width
BS/2	Group 2	18 mm PARALLEL	A30x6x6
BS/2C	Group 2	1:8 TAPER	4 mm width
BS/R2	Group 2 Heavy Duty Reinforced	22 mm PARALLEL	A40x6x6
BS/3U	Group 3	24 mm PARALLEL	A40x8x7
BS/3UC	Group 3	1:8 TAPER	4 mm width
BS/35U	Group 3.5	28 mm PARALLEL	A45x8x7
BS/35UC	Group 3.5	1:8 TAPER	5 mm width

back to content page

TEL 0118 976 1616 FAX 0118 976 1626

Pump Couplings
Steel

: Steel (white zinc plated)

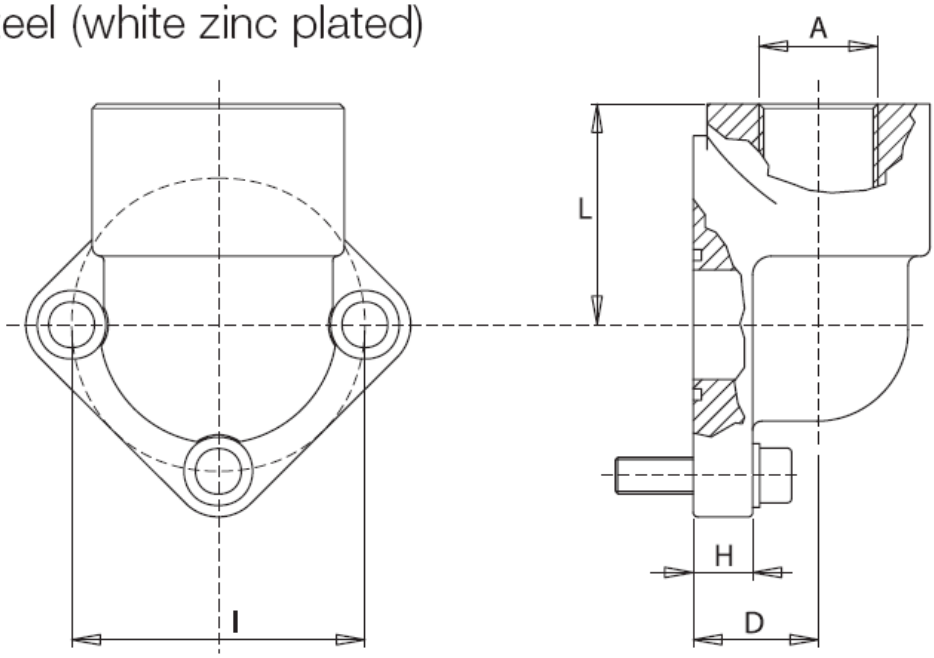

Type	Pump Group	A	I	D	H	L	No Fixings	Supplied c/w Screws	Supplied c/w O-Rings
RPA05-038M	0.5	3/8"	26	17	10	27	3	M5 x 20	2056
RPA05-012M	0.5	1/2"	26	17	10	27	3	M5 x 20	2056
RPA1-038M	1	3/8"	30	17	10	27	3	M6 x 20	121
RPA1-012M	1	1/2"	30	17	10	27	3	M6 x 20	121
RPA2-038M	2	3/8"	40	21	11	36	3	M8 x 25	132
RPA2-012M	2	1/2"	40	21	11	36	3	M8 x 25	132
RPA2-034M	2	3/4"	40	21	11	36	3	M8 x 25	132
RPA3-034M	3	3/4"	51	27	15	46	3	M10 x 30	4118
RPA3-100M	3	1"	51	27	15	46	3	M10 x 30	4118
RPA3-034BM	3	3/4"	56	27	15	46	3	M10 x 30	4118
RPA3-100BM	3	1"	56	27	15	46	3	M10 x 30	4118
RPA35-100M10M	3.5	1"	62	36	16	56	3	M10 x 30	4150
RPA35-114M10M	3.5	1 1/4"	62	36	16	56	3	M10 x 30	4150
RPA35-100M12M	3.5	1	62	36	16	56	3	M12 x 35	4150
RPA35-114M12M	3.5	1 1/4"	62	36	16	56	3	M12 x 35	4150
RPA4-114M	4	1 1/4"	72.5	37	17	56	3	M12 x 35	153
RPA4-112M	4	1 1/2"	72.5	37	17	56	3	M12 x 35	153
RPA6-212M	—	2 1/2"	92	52	18	75	3	M12 x 40	4275

Many other pump couplings available
Please contact us……

TEL 0118 976 1616 FAX 0118 976 1626

back to content page

Pump Couplings
Aluminium

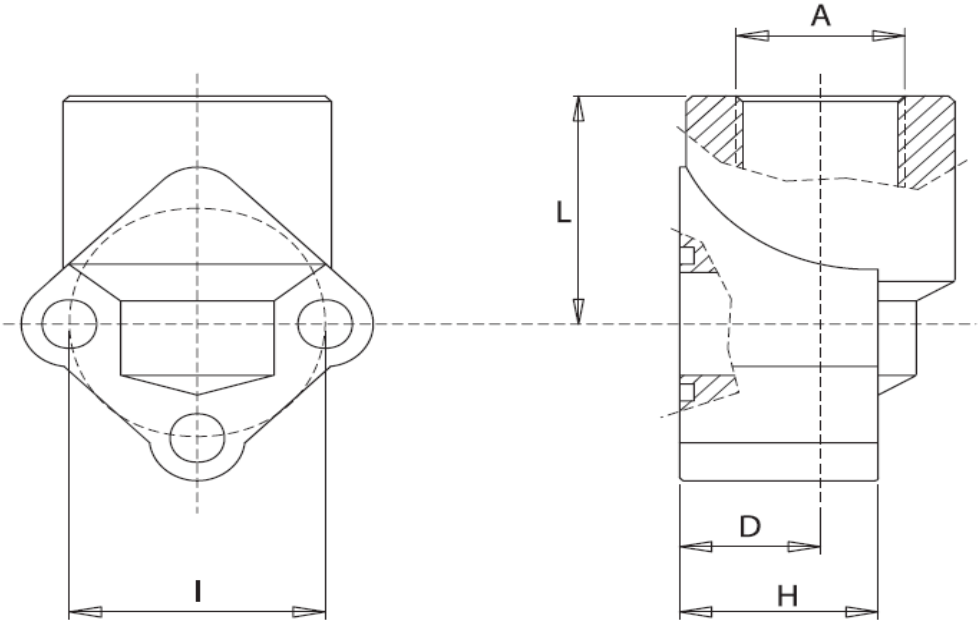

Type	Pump Group	A	I	D	H	L	No Fixings	Supplied c/w Screws	Supplied c/w O-Rings
RP05-038M	0.5	3/8"	26	18	24	30	3	M5 x 35	2056
RP05-012M	0.5	1/2"	26	18	24	30	3	M5 x 35	2056
RP1-038M	1	3/8"	30	18	26	30	3	M6 x 35	121
RP1-012M	1	1/2"	30	18	26	30	3	M6 x 35	121
RP2-012M	2	1/2"	40	20	31	40	3	M8 x 45	130
RP2-034M	2	3/4"	40	20	31	40	3	M8 x 45	130
RP3-034M	3	3/4"	51 / 56	26	43	46	3	M10 x 60	4118
RP3-100M	3	1"	51 / 56	26	43	46	3	M10 x 60	4118
RP35-114M	3.5	1 1/4"	62	33.5	17	57	2	M12 x 35	4143
RP4-112M	4	1 1/2"	72.5	38	17	64	2	M12 x 35	4175

SAE FLANGES

&
Many other Couplings available

TEL 0118 976 1616 FAX 0118 976 1626

back to content page

COMMERCIAL VEHICLE PTO'S AND PUMPS

3 bolt Gear Pumps — Cast Iron. Available in 3 or 4 Bolt 'ISO'

GEAR PUMP	30. 17	30. 27	30. 34	30. 43	30. 51	30. 61	30. 73	30. 82	30. 100	30. 125
Displacement cc/rev	17	27	34	43	51	61	73	82	100	125
Inlet Port BSP	1/2"	3/4"	3/4"	3/4"	1"	1"	1"	11/4"	11/4"	11/4"
Outlet port BSP	1/2"	3/4"	3/4"	3/4"	1"	1"	1"	1"	11/4"	11/4"
Max. Speed at P2 pressure (rpm)	3000	3000	2800	2500	2500	2000	1800	1800	1800	1800
Max. Pressure P2 (bar)	315	315	300	290	260	240	220	210	200	180

Ordering Code Example :- **DP30** ***34*** ***I D*** ***I*** **ISO**

Model — *Displacement cc/rev* — *Rotation D = Right/S=Left* — *Addition for 4 Bolt ISO Fixing*

4 to 3 or 3 to 4 Adaptor plates available

BENT AXIS PISTON PUMPS.

Nominal pressure 300 bar, peak 350 bar.
Self aspirating, for open circuit applications, no drain line required

GEAR PUMP	KFA 23	KFA 32	KFA 45	KFA 63	KFA 80	KFA 107
Displacement cc/rev	22.9	32	45.6	63	80.4	106.7
Suction Port BSP	3/4"	3/4"	1"	1"	1"	1 1/4"
Delivery port BSP	1/2"	1/2"	3/4"	3/4"	3/4"	1"
Max Speed Rpm	2500	2500	2240	2000	1800	1600

Ordering Code Example :- **KFA** ***45*** ***I D***

Model — *Displacement cc/rev* — *Rotation D = Right/S=Left*

PTO'S AVAILABLE FOR ALL VEHICLES

Gearboxes,
Air Kits, etc.. Please contact us..

TEL 0118 976 1616 FAX 0118 976 1626

back to content page

GEARBOXES AND PTO PUMP GEARBOX UNITS

We stock an extensive range of Pump and Motor drive Gearboxes. Available for Group 2 & 3 Pumps. Male Shaft or Female Quick Release coupling for PTO

borelli

Part Number	Ratio	Shaft Type	Pump Size
60004-6	3.9 : 1	Female Quick Release	Group 2
60001-6	3.9 : 1	Male PTO Spline Shaft	Group 2
60004-5	3.5 : 1	Female Quick Release	Group 2
60001-5	3.5 : 1	Male PTO Spline Shaft	Group 2
70004-5	3.5 : 1	Female Quick Release	Group 3
70001-5	3.5 : 1	Male PTO Spline Shaft	Group 3
70004-6	3.8 : 1	Female Quick Release	Group 3
70001-6	3.8 : 1	Male PTO Spline Shaft	Group 3

Hydraulic Motor Reduction Gearbox.

SAE 'A' Flange Motor fits directly onto Gearbox

Part Number	Ratio	Through Shaft dia	Motor Flange
95001-6	1 : 3.8	38.5 mm	2 Bolt SAE 'A'
96001-5 Heavy Duty	1 : 3.5	38.5 mm	2 Bolt SAE 'A'

540 rpm PTO GEARBOX & PUMP SELECTION.

borelli

Pump & Gearbox c/w Male or Female PTO Quick release coupling and pump shaft adaptor.

Part Number	Flow LPM	Max Pressure bar	PumpSize cc/rev	Gearbox Ratio
60004-6 + PNP211DC00101A	23	280	11	3.9 : 1
60004-6 + PNP214DC00101A	29.5	260	14	3.9 : 1
60004-6 + PNP216DC00101A	33.5	250	16	3.9 : 1
60004-6 + PNP220DC00101A	42	230	20	3.9 : 1
60004-6 + PNP226DC00101A	54.75	190	26	3.9 : 1
70004-6 + HP30C3248G	60.8	250	32	3.5 : 1
70004-6+ HP30C3248G	65.6	250	32	3.8 : 1
70004-6 + HP30C3648G	73.8	250	36	3.8 : 1
70004-5 + HP30C4648G	86.9	230	46	3.5 : 1
70004-5 + HP30C5048G	94.5	200	50	3.5 : 1
70004-6 + HP30C5048G	102.6	200	50	3.8 : 1

' T ' SHAPED GEARBOXES AND PLANETARY GEARBOXES ALSO AVAILABLE...

TEL 0118 976 1616 FAX 0118 976 1626

back to content page

BELL HOUSINGS & DRIVE COUPLINGS

PUMP GROUP (4 BOLT FLANGE 1:8 TAPER SHAFT)	B5 MOTOR FRAME SIZE	MOTOR POWER kW	MOTOR SHAFT	BELL HOUSING Part Re	DRIVE COUPLING Part Re
05	D63	0.12 - 0.18	11 mm	LS140	ND01
1	D63	0.12 - 0.18	11 mm	LS141	ND03
05	D71	0.25 - 0.37	14 mm	LS160	ND1
1	D71	0.25 - 0.37	14mm	LS161	ND2
05	D80	0.55 - 0.75	19 mm	LS200	ND4
1	D80	0.55 - 0.75	19 mm	LS201	ND5
2	D80	0.55 - 0.75	19 mm	LS203	ND7
3	D80	0.55 - 0.75	19 mm	LE2006	ND50A
3.5	D80	0.55 - 0.75	19 mm	LE2010	ND50B
1	D90	1.1 - 1.5	24 mm	LS201	ND70A
1 H/DUTY	D90	1.1 - 1.5	24 mm	LS201	ND8
2	D90	1.1 - 1.5	24 mm	LS203	ND10
3	D90	1.1 - 1.5	24 mm	LE2006	ND51A
3.5	D90	1.1 - 1.5	24 mm	LE2010	ND51B
1	D100/112	2.2 - 4	28 mm	LS250	ND11
2	D100/112	2.2 - 4	28 mm	LS252	ND13
3	D100/112	2.2 - 4	28 mm	LS255	ND61C
3 H/DUTY	D100/112	2.2 - 4	28 mm	LS255	ND15
2	D132	5.5 - 9	38 mm	LS300	ND16
3	D132	5.5 - 9	38 mm	LS302	ND17
3.5	D132	5.5 - 9	38 mm	LS306	ND18
2	D160	11 - 15	42 mm	LS350	ND43A
3	D160	11 - 15	42 mm	LS352	ND43C
3.5	D160	11 - 15	42 mm	LE3507	ND21
4	D160	11 - 15	42 mm	LSE358	ND22
2	D180	18.5 - 22	48 mm	LS350	ND44A
3	D180	18.5 - 22	48 mm	LS352	ND44C
3.5	D180	18.5 - 22	48 mm	LE3507	ND25
4	D180	18.5 - 22	48 mm	LSE358	ND26
3	D200	30	55 mm	LE4002	ND40
3.5	D200	30	55 mm	LE4006	ND41
4	D200	30	55 mm	LSE407	ND42
3.5	D225	37 - 45	60 mm	LE4502	ND30
4	D225	37 - 45	60 mm	LS453	ND31

IMPERIAL COUPLINGS PUMP SIZE	MOTOR HALF SIZE	DRIVE COUPLING Part Re
GROUP 1	3/4" BORE	ND510
GROUP 1	1" BORE	ND610
GROUP 2	3/4" BORE	ND513
GROUP 2	1" BORE	ND613
GROUP 3	1" BORE	ND616

TEL 0118 976 1616 FAX 0118 976 1626

back to content page

Bellhousings & Couplings
Gear pumps with Standard 4 bolt flange and Internal Combustion Engines

TEL 0118 976 1616 FAX 0118 976 1626

Type LMH

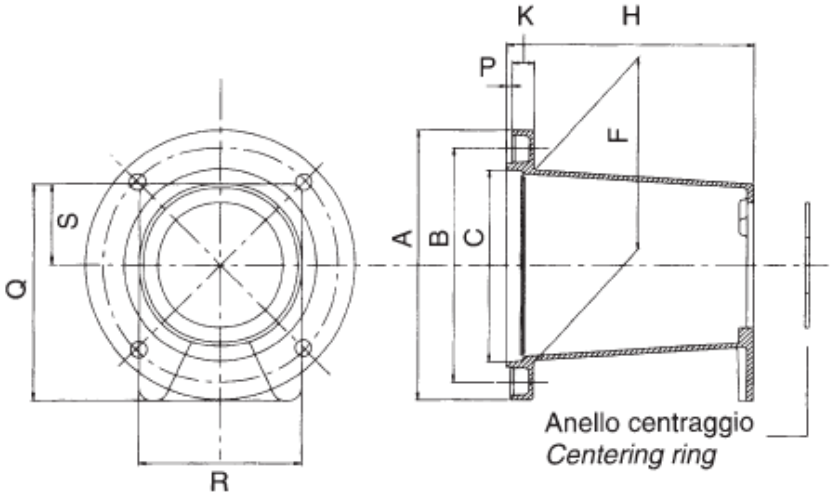

Type LB

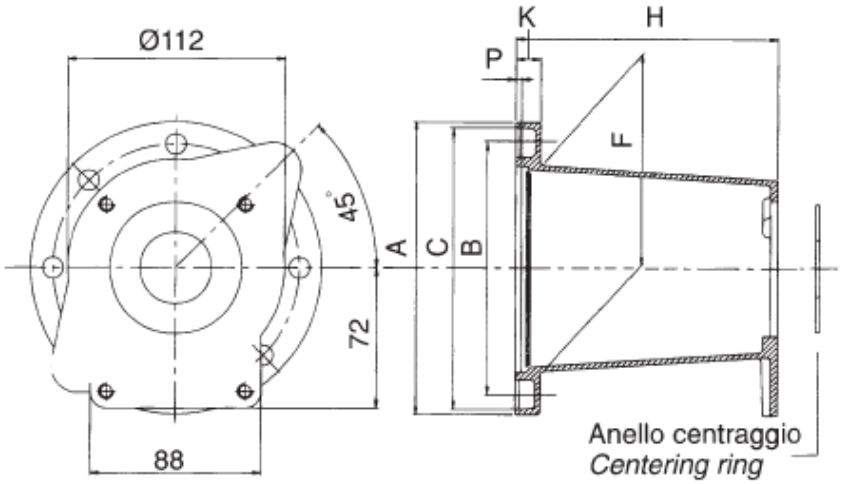

Motor kW	Motor HP	Motor Shaft dia	Pump Group	Bellhousing	A	B	C	D	F	H	K	P	Q	R	S	Coupling
2.2 - 4	3 - 5.5	18 mm ch.5	1	LMH151	110	92	78.5	9	78	98	12	3	90	70	34	ND500
		19.5 mm ch4.6	1	LMH151	110	92	78.5	9	78	98	12	3	90	70	34	ND501
5 - 13.5	7 - 18	25 mm ch.7	1	LMH401	146	127	110	9	110	134	12	3	118	91	43.5	ND600
		25 mm ch.7	2	LMH403	146	127	110	9	110	134	12	3	118	91	43.5	ND603
		25.4 mm ch.6.35	1	LMH401	146	127	110	9	110	134	12	3	118	91	43.5	ND610
		25.4 mm ch.6.35	2	LMH403	146	127	110	9	110	134	12	3	118	91	43.5	ND603
		25 mm ch.7	1	LB152-U1P	152	128	146	10.5	110	142	15	3.5	-	-	-	ND600
		25 mm ch.7	2	LB152-2	152	128	146	10.5	110	142	15	3.5	-	-	-	ND603
		25.4 mm ch.6.35	1	LB152-U1P	152	128	146	10.5	110	142	15	3.5	-	-	-	ND610
		25.4 mm ch.6.35	2	LB152-2	152	128	146	10.5	110	142	15	3.5	-	-	-	ND613
		25 mm ch.7	3	LB152-3	152	128	146	10.5	110	142	15	3.5	-	-	-	ND606
		25.4 mm ch.6.35	3	LB152-3U	152	128	146	10.5	110	142	15	3.5	-	-	-	ND616
		25 mm ch.7	SAE A	LB152-825A	152	127	146	10	110	142	15	3.5	-	-	-	ND700
		25.4 mm ch.6.35	SAE A	LB152-825A	152	127	146	10	110	142	15	3.5	-	-	-	ND710
		25 mm ch.7	SAE B	LB152-101A	152	127	146	10	110	142	15	3.5	-	-	-	ND701
		25.4 mm ch.6.35	SAE B	LB152-101A	152	127	146	10	110	142	15	3.5	-	-	-	ND711

Various other types available, please contact us.....

back to content page

SILENCED BELL HOUSINGS

BS Type Bellhousings have been developed to reduce the noise of applications. In tests a noise level reduction of 5dB is achievable in certain applications. An oil resistant rubber ring is inserted in the pump side of the housing which reduces vibrations and noise levels.

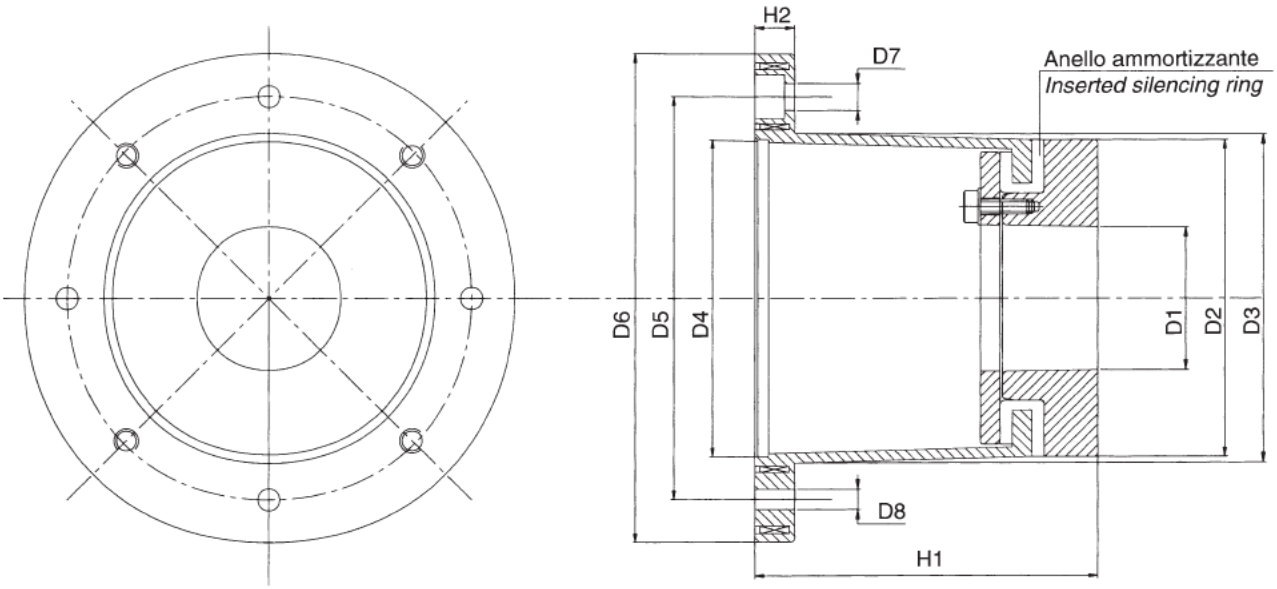

Frame	kW	HP	TYPE	D1 min	D2	D3	D4	D5	D6	D7	#Holes	D8	H1	H2
80-90	0.55-1.5	0.75-2	BS201	60	130	137	130	165	200	12	4	M10	138	16
100-112	2.2-4	3-5.5	BS251	80	180	183	180	215	250	14	4	M12	136	21
132	5.5-9	7.5-12.5	BS301	80	250	235	230	265	300	14	4	M12	170	25
160-182	11-22	15-30	BS351	80	250	253	250	300	350	18	4	M16	195	25
200	30	40	BS401	80	250	295	300	350	400	18	4	M16	206	25
225	37-45	50-60	BS451	80	250	350	350	400	450	18	4	M16	293	27
250-280	55-90	75-125	BS551	80	250	450	450	500	550	18	8	M16	303	30
315S	110	150	BS661	80	250	550	550	600	660	22	8	M16	303	35

DAMPING RINGS

Consist of 2 vulcanised rubber rings mounted in between the bellhousing and the tank cover, can reduce the noise by 3-5 dB.

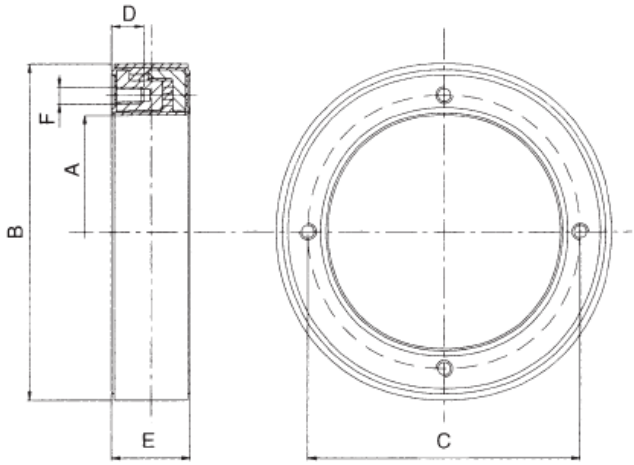

Part Number	A	B	C	D	E	F
A-200	146	200	165	15	43	M10
A-250	191	250	215	18	48	M12
A-300	238	300	265	18	53	M12
A-350	261	350	300	24	61.5	M16
A-400	311	400	350	24	69	M16

Other Damping Rings & Rods are available, please contact us.....

TEL 0118 976 1616 FAX 0118 976 1626

back to content page

Cooler Bellhousings

Oil Cooler Bellhousings from 2.2 kW to 4 Kw, suitable for Clockwise Rotation pumps
Maximum working Pressure 16 bar. Please contact us .....

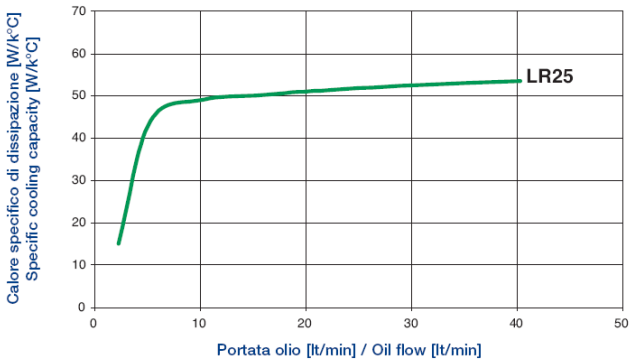

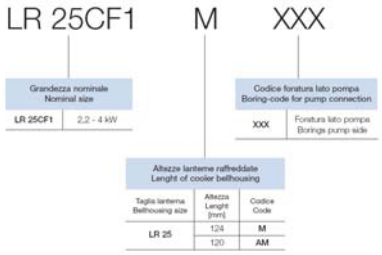

Foot mounting Flanges & Damping Rods

Manufactured from high resistance Aluminium Alloy. Foot Flanges are used to support the bellhousings with standard B5 flange up to a Motor external diameter of 350 mm. From 400 mm dia upwards the Flanges are made of steel.

Damping Rods are used between the Foot Flange and mounting surface, consisting of 2 bars moulded into vulcanised rubber, can reduce the noise by 3-5 dB.

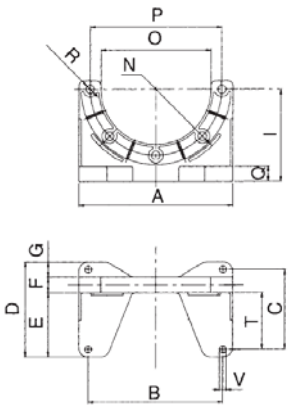

Da ∅ 160 a ∅ 350
From ∅160 to ∅350

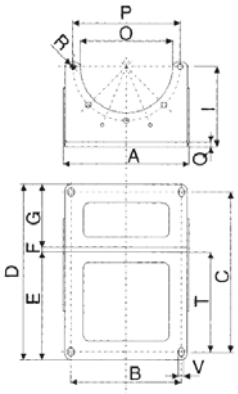

Da ∅ 400 a ∅ 550
From ∅ 400 to ∅ 550

Foot Flange Part Number	A	B	C	D	E	F	G	I	N	O	P	Q	R	T	V	Damping Rod Part Number
P160	165	135	80	100	45	10	45	98	80	111	130	10	9	35	9	BMA-P160-OMT
P200	202	168	103	125	54	19	54	123	100	140	165	22	11.5	42.5	9	BMA-P160-OMT
P250	252	220	130	155	105	25	25	150	125	180	215	25	13	92.5	11	BMA-P160-OMT
P300	302	265	160	190	115	25	50	175	150	240	265	25	13	100	13	BMA-P160-OMT
P350	362	310	250	286	183	30	73	205	175	256	300	30	18	165	15	BMA-P160-OMT
P400	410	360	520	570	350	15	205	260	175	301	350	15	18	325	18	BMA-P160-OMT
P450	460	400	590	640	390	15	235	295	200	351	400	15	18	365	18	BMA-P160-OMT
P550	560	500	690	740	470	15	255	350	250	450	500	15	18	445	18	BMA-P160-OMT

TEL 0118 976 1616 FAX 0118 976 1626

back to content page

Gaskets for Bellhousings

GL Gaskets
to fit between the bellhousing and the Tank

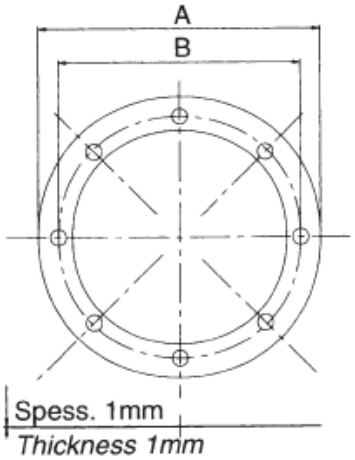

Part Number	A	B
GL140	140	115
GL160	160	130
GL200	200	165
GL250	250	215
GL300	300	265
GL350	350	300
GL400	400	350

GP Gaskets
to fit between the bellhousing and the Pump

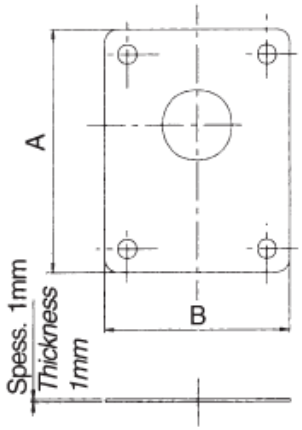

Part Number	A	B
GP05	82	50
GP1	90	69
GP05-1M	90	69
GP2	118	86
GP2ZF	121	91
GP3	170	120
GP35	180	158
GP4	230	175

TEL 0118 976 1616 FAX 0118 976 1626

SAB WATER / OIL HEAT EXCHANGERS

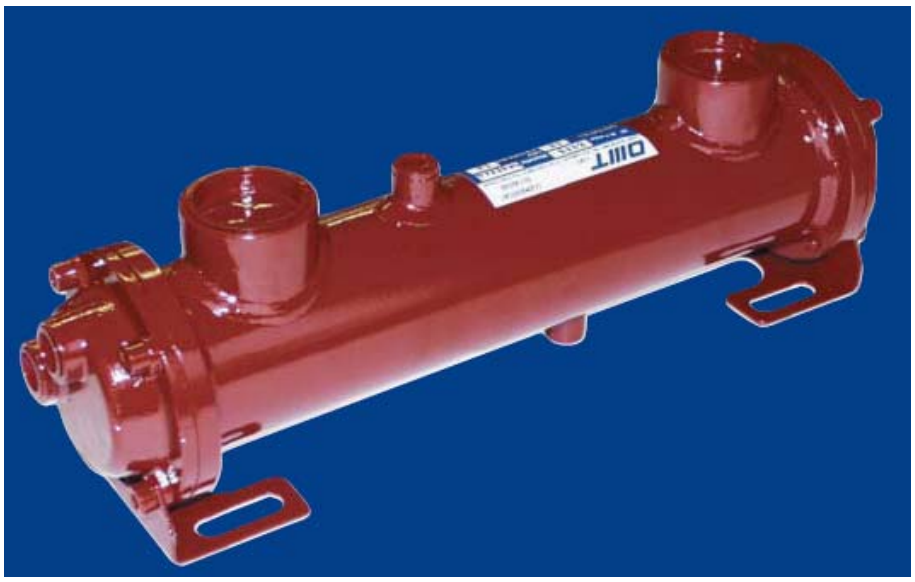

2 or 4 way Coolers

Oil and Water connections in various sizes

Please contact us with your Enquiry or technical Information...

back to content page

OIL TANKS

Complete with Lid, Gasket, & Drain Plug, Red Oxide Primed or Epoxy Painted.

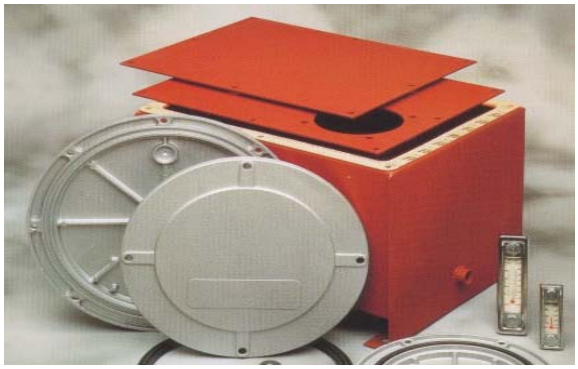

Steel Tanks Type CF

Aluminium Alloy Tanks Type CP

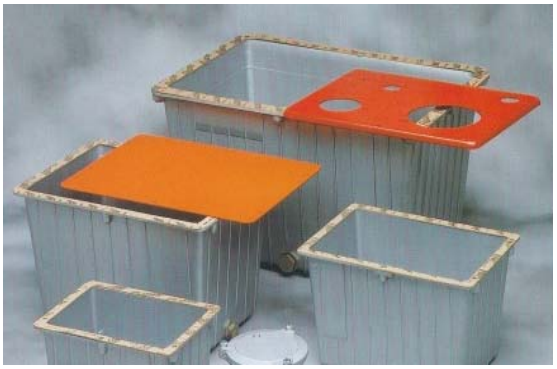

TEL 0118 976 1616 FAX 0118 976 1626

Steel Tanks	CF 12 GC	CF 16 GC	CF 30 GC	CF 55 GC	CF 75 GC	CF 100 GC	CF 180 GC	CFP225 GC	CFP300 GC	CFP400 GC
CAPACITY (Litres)	14	22	39	58	75	100	165	205	245	390
HEIGHT (mm) including Feet	290	305	335	365	455	505	555	640	700	720
WIDTH (mm)	270	325	375	470	470	520	620	600	600	765
LENGTH (mm)	335	410	470	600	600	675	805	900	900	1260

Aluminium Tanks	NOMINAL CAPACITY LITRES	DEPTH mm	WIDTH mm	LENGTH mm
CP3GC	3	150	160	220
CP6GC	6	176	200	280
CP10GC	10	220	247	340
CP16GC	16	243	290	368
CP25MGC	25	285	340	490
CP55GC	55	345	385	595
CP75GC	75	465	400	595

CUSTOM BUILT TANKS ARE AVAILABLE PLEASE CONTACT US...

Inspection covers made of Die Cast Aluminium alloy, supplied with gasket, can be pre-mounted if required

PART RE	DIAMETER	NUMBER OF MOUNTING HOLES	SIZE OF MOUNTING HOLES
SI 275G	275 mm	6	9 mm
SI 400G	400 mm	8	9 mm
SE 350	350 mm	4	11.5 mm
SE 475	475 mm	6	11.5 mm

back to content page

OIL TANKS

Pre Machined 10 Ltr Steel Covers with Tank Components

A Fully machined cover for use on CP10 Tanks, with or without Standard component Parts to assemble Power packs

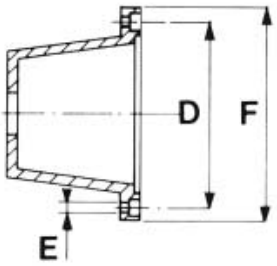

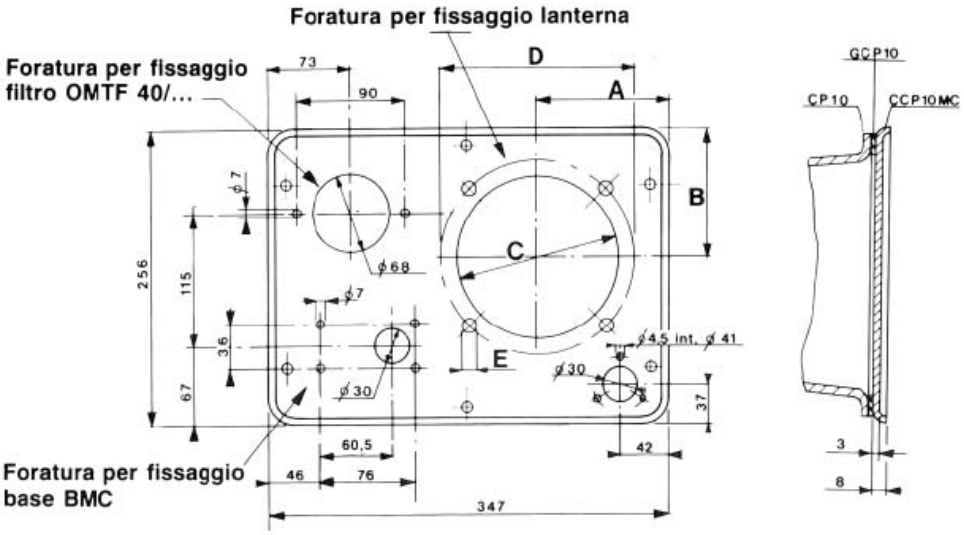

Lid Code	Bell housing Frame dia	A	B	C	D	E
CCP10 MC140	140 mm	88	82	101	115	9.5
CCP10 MC160	160 mm	98	92	115	130	9.5
CCP10 MC200	200 mm	116	112	135	165	11.5

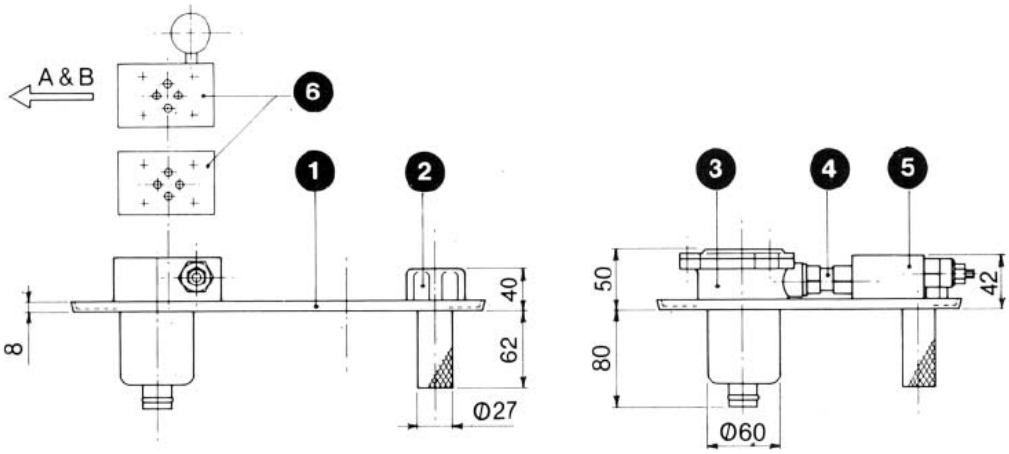

Part	Description	Type
1	Cover	CCP10 MC...
2	Filler Breather	TR-1
3	Return Line Filter (25 Micron)	OMTF091C25
4	Special Fitting	R12 MC
5	Base Plate	BMC-VC2
6	Cetop Stackable Plate	ML31

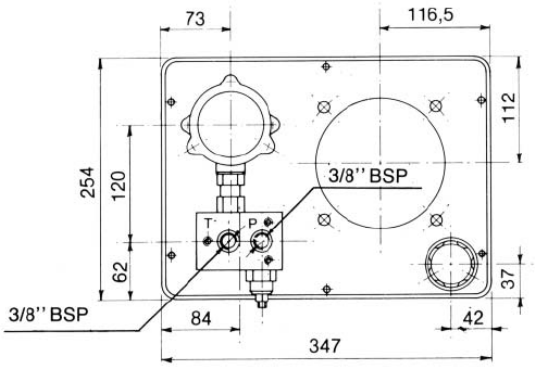

SIGHT LEVEL INDICATORS, FILLER BREATHERS, SUCTION STRAINERS, SPIN ON FILTERS & TANK TOP MOUNTED FILTERS PAGES 76 to 81.....

TEL 0118 976 1616 FAX 0118 976 1626

back to content page

Oil Tank Accessories

FILLER BREATHERS
IN CHROME PLATED STEEL WITH BAYONET CLOSURE TYPE TP1

PART RE	OUTER DIAMETER	WIDTH OF BASKET	LENGTH OF BASKET
TP1.02600	52 mm	27 mm	65 mm
TP1.02601	83 mm	50 mm	80 mm
TP1.02602	83 mm	50 mm	150 mm
TP1.02603	83 mm	50 mm	203 mm

FILLER BREATHERS
IN CHROME PLATED STEEL WITH KEY LOCKABLE CAP TYPE TP2

PART RE	OUTER DIAMETER	WIDTH OF BASKET	LENGTH OF BASKET
TP2.02604	83 mm	50 mm	80 mm
TP2.02605	83 mm	50 mm	150 mm

ANGLED ADAPTOR CAP PV9.01746

Angled adaptor mounting flange for Filler Caps TP1.02602, TP102603, TP1.02604 & TP1.02605.

FILLER BREATHERS
IN NYLON WITH BAYONET CLOSURE OR 52 mm THREADED CONNECTION

PART RE	CONNECTION TYPE	OUTER DIAMETER	WIDTH OF BASKET	LENGTH OF BASKET
TPB-2D	6x 5 mm screws	91	44 mm	110 mm
TPM-2-M52	M52 x 2 mm	91	—	—

TEL 0118 976 1616 FAX 0118 976 1626

back to content page

Oil Tank Accessories

SIGHT LEVEL / TEMPERATURE INDICATORS

INDICATORS IN ANODISED ALUMINIUM OR PLASTIC HOUSING COME COMPLETE WITH SCREWS AND SEALS NEEDED FOR INSTALLATION.

Aluminium	HOLE CENTRES	BOLT SIZE	TOTAL LENGTH
L05.076TE	76 mm	M10 x 1.5	116 mm
L05.127TE	127 mm	M12 x 1.75	177 mm
L05.254TE	254 mm	M12 x 1.75	285 mm

Plastic	HOLE CENTRES	BOLT SIZE	TOTAL LENGTH
LT1TPM10	76 mm	M10 x 1.5	116 mm
LT2TPM12	127 mm	M12 x 1.75	166 mm

OIL LEVEL SWITCHES

Available in various lengths and either threaded or Flange connection.
Single or 2 way switching.
Various Options available, please contact us.....

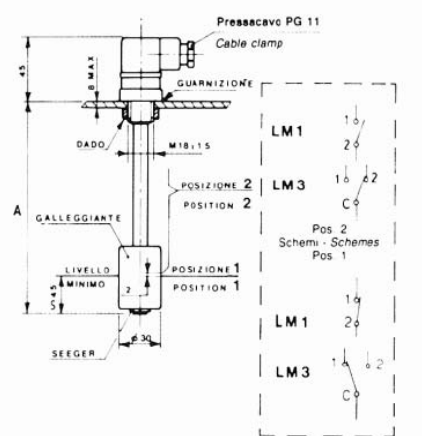

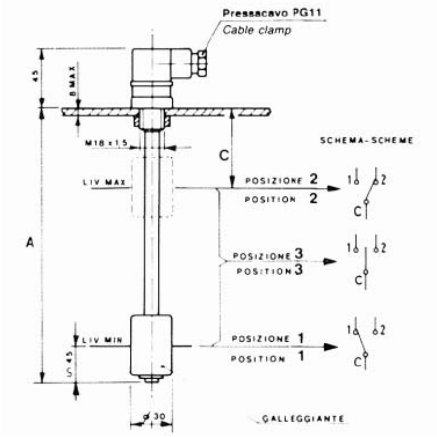

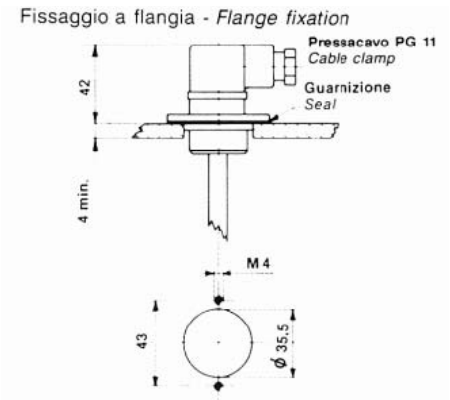

Gauge Isolators

Available with Push Button or rotary knob operation Hexagonal Nut or Flange Mounting

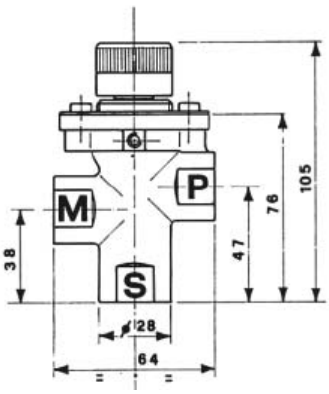

Part No	TYPE	Mounting
HB1-PA	Push Button	Screw
HB1-PAF	Push Button	Flange
HB1-RAF	Rotary Selector	Flange

back to content page

Suction Strainers

SUCTION STRAINERS

SUCTION LINE FILTERS WITH SPIN ON CONNECTION METAL FABRIC 90 MICRON

PART RE	FLOW RATE	THREAD SIZE	LENGTH	OUTSIDE DIA.
FR5.02361	6 LPM	1/4"	37 mm	32 mm
FR5.02334	10 LPM	1/4"	33 mm	50 mm
FI1.10M90	18 LPM	3/8"	90 mm	50 mm
FI2.10M90	22. LPM	1/2"	90 mm	50 mm
FI2.15M90	23 LPM	1/2"	93 mm	69 mm
FI3.15M90	45 LPM	3/4"	93 mm	69 mm
FI3.20M90	57 LPM	3/4"	143 mm	69 mm
FI4.20M90	58 LPM	1"	150 mm	70 mm
FI4.25M90	59 LPM	1"	94 mm	100 mm
FI4.30M90	84 LPM	1"	143 mm	100 mm
FI5.30M90	117 LPM	1 1/4"	143 mm	100 mm
FI5.35M90	120 LPM	1 1/4"	180 mm	100 mm
FI5.40M90	138 LPM	1 1/4"	230 mm	100 mm
FI6.40M90	136 LPM	1 1/2"	230 mm	100 mm
FI6.50M90	132 LPM	1 1/2"	110 mm	140 mm
FI6.55M90	163 LPM	1 1/2"	165 mm	140 mm
FI7.55M90	205 LPM	2"	165 mm	140 mm
FI7.60M90	235 LPM	2"	211 mm	140 mm
FI7.70M90	245 LPM	2"	320 mm	140 mm
FI8.70M90	265 LPM	3"	326 mm	140 mm
FI9.70M90	275 LPM	3"	290 mm	150 mm

STEEL END CAPS

STAINLESS STEEL MEDIA

OPERATING TEMP + 100(°C)

OTHER MICRONS AVAILABLE

TEL 0118 976 1616 FAX 0118 976 1626

OIL SUCTION STRAINER DOME TYPE

90 MICRON STANDARD, 200 & 250 MICRON AVAILABLE

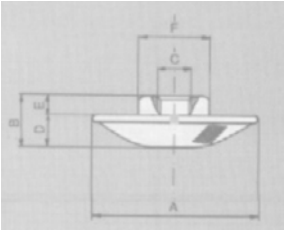

PART RE	FR5.01752	FR5.03506	FR5.02395	FR1.02319	FR1.02396	FR1.02392
FLOW RATE LPM	7	7	12	10	12	14
A dia	63	80	80	63	63	80
B	16	17	23	18	20	25
C	1/4"	1/4"	1/4"	3/8"	3/8"	3/8"
D	10	12	18	10	12	18
E	6	5	5	8	8	7
F	22	22	22	22	22	22
FILTERING SURFACE CM³	30	53	200	30	45	200
MICRON	90	90	90	90	90	90

back to content page

FILTRATION

SPIN ON FILTERS

Our 'HL' range of inline filters with disposable spin on cartridge are suitable for use on suction lines or return lines
of hydraulic and lubrication systems.
Return filters are complete with bypass
And Visual Indicators can be fitted.

RETURN LINE FILTER HEAD & CANNISTER	THREAD SIZE	MICRON	FLOW RATE	REPLACEMENT ELEMENT	HEIGHT
THL.10ST2+FHL.1M10	3/4"	10	68 LPM	FHL.1M10	145 mm
THL.10ST2+FHL.1M25	3/4"	25	73 LPM	FHL.1M25	145 mm
THL.10ST2+FHL.2M10	3/4"	10	74 LPM	FHL.2M10	165 mm
THL.10ST2+FHL.2M25	3/4"	25	80 LPM	FHL.2M25	165 mm
THL.20ST2+FHL.3M10	1 1/4"	10	130 LPM	FHL.3M10	180 mm
THL.20ST2+FHL.3M25	1 1/4"	25	170 LPM	FHL.3M25	180 mm
THL.20ST2+FHL.4M10	1 1/4"	10	150 LPM	FHL.4M10	205 mm
THL.20ST2+FHL.4M25	1 1/4"	25	188 LPM	FHL.4M25	205 mm
THL.30ST2+FHL.3M10x2	1 1/4"	10	290 LPM	FHL.3M10X2	180 mm
THL.30ST2+FHL.3M25x2	1 1/4"	25	325 LPM	FHL.3M25X2	180 mm
THL.30ST2+FHL.4M10x2	1 1/4"	10	305 LPM	FHL.4M10X2	205 mm
THL.30ST2+FHL.4M25x2	1 1/4"	25	340 LPM	FHL.4M25X2	205 mm
THL.10ST2 HEAD ONLY	3/4"				
THL.20ST2 HEAD ONLY	1 1/4"				
THL.30ST3 HEAD ONLY	1 1/4"				

SUCTION LINE FILTER HEAD & CANNISTER	THREAD SIZE	MICRON	FLOW RATE	REPLACEMENT ELEMENT	HEIGHT
THL.10ST1+FHL.1M60	3/4"	60	30 LPM	FHL.1M60	145 mm
THL.10ST1+FHL.1MCV	3/4"	125	30 LPM	FHL.1MCV	145 mm
THL.10ST1+FHL.2M60	3/4"	60	35 LPM	FHL.2M60	165 mm
THL.10ST1+FHL.2MCV	3/4"	125	35 LPM	FHL.2MCV	165 mm
THL.20ST1+FHL.3M60	1 1/4"	60	95 LPM	FHL.3M60	180 mm
THL.20ST1+FHL.3MCV	1 1/4"	125	95 LPM	FHL.3MCV	180 mm
THL.20ST1+FHL.4M60	1 1/4"	60	100 LPM	FHL.4M60	205 mm
THL.20ST1+FHL.4MCV	1 1/4"	125	100 LPM	FHL.4MCV	205 mm
THL10ST1 HEAD ONLY	3/4"				
THL.20ST1 HEAD ONLY	1 1/4"				
THL.30ST1 HEAD ONLY	1 1/4"				
CLOGGING INDICATORS					
IND.02616 PRESSURE	1-12 BAR				
IND.02617 VACUUM	0-76 cm Hg				

TEL 0118 976 1616 FAX 0118 976 1626

back to content page

TANK TOP FILTERS

THE SIF SERIES OF FILTERS ARE FOR INSTALLATION ON THE RETURN LINE, SEMI SUBMERGED IN THE TANK.
ALL FILTERS ARE COMPLETE WITH BYPASS VALVE AND PERMANENT MAGNET TO RETAIN METAL IMPURITIES.

COMPLETE FILTER	FLOW RATE	MICRON	THREAD SIZE	LENGTH	OUTSIDE DIAMETER	REPLACEMENT CARTRIDGE
SIF10A30	40 LPM	30	1/2"	129 mm	66 mm	FXR.A3M30
SIF15B30	75 LPM	30	3/4"	155 mm	86 mm	FXR.A5M30
SIF20C30	85 LPM	30	1"	200 mm	86 mm	FXR.A6M30
SIF25D30	200 LPM	30	1 1/4"	315 mm	129 mm	FXR.A8M30
SIF30F30	300 LPM	30	1 1/2"	312 mm	173 mm	FXR.B1M30
SIF30G30	350 LPM	30	1 1/2"	312 mm	173 mm	FXR.B2M30
SIF35H30	370 LPM	30	2"	362 mm	173 mm	FXR.B3M30

HYDRAULIC THREADED AIR BREATHERS

IN CHROME PLATED STEEL THREADED FOR INSTALLATION ON THE TANK
TP9 TYPE INCLUDES VACUUM VALVE TO MAINTAIN THE PRESSURE IN THE TANK @ 0.35 Bar

PART RE	THREAD SIZE	MICRON	LENGTH	OUTSIDE DIAMETER
TP8.02613	1/4"	40	45	47
TP8.02614	3/4"	40	60	75
TP8.03842	3/4"	10	60	75
TP9.02615	3/4"	40	60	75

AIR BREATHERS

IN CHROME PLATED STEEL THREADED FOR INSTALLATION ON THE TANK
CARTRIDGE CAN BE PAPER 5-7 MICRON OR VELVET MESH 40 MICRON.
CAN ALSO BE SUPPLIED WITH A JUBILEE CLIP OR METRIC THREAD

PART RE	THREAD SIZE	LENGTH	OUTSIDE DIAMETER	AIR FLOW M3/H
FAS.04499	1/4"	45	55	18
FAS.04501	3/8"	45	55	18
FAS.04502	1/2"	60	79	40
FAS.04503	3/4"	90	104	68
FAS.04504	1"	100	130	140
FAS.04505	1 1/2"	130	130	200

TEL 0118 976 1616 FAX 0118 976 1626

back to content page

High Pressure Filters

OMT Medium & High Pressure Filters

HMM & HPM Filters are designed for pressure line applications and are suitable for in-line installation. Options of 3, 6 10,25 & 60 Micron.
Available with Visual or visual Electric Indicator. 6 bar bypass.

Medium Pressure 220 bar	FLOW LPM	MICRON	THREAD	LENGTH	BOWL DIAMETER
HMM281F03/(06)XNR	17/(20)	3/(6)	1/2"	189 mm	70 mm
HMM281F10XNR	35	10	1/2"	189 mm	70 mm
HMM281F25XNR	50	25	1/2"	189 mm	70 mm
HMM281R60XNR	90	60	1/2"	189 mm	70 mm
HMM282F03/(06)XNR	26/(40)	3/(6)	1/2"	219 mm	70 mm
HMM282F10XNR	55	10	1/2"	219 mm	70 mm
HMM282F25XNR	80	25	1/2"	219 mm	70 mm
HMM282R60XNR	95	60	1/2"	219 mm	70 mm
HMM283F03/(06)XNR1	38/(50)	3/(6)	3/4"	319 mm	70 mm
HMM283F10XNR1	70	10	3/4"	319 mm	70 mm
HMM283F25XNR1	95	25	3/4"	319 mm	70 mm
HMM283R60XNR1	95	60	3/4"	319 mm	70 mm
HMM421F03/(06)XNR	55/(65)	3/(6)	3/4"	277 mm	78 mm
HMM421F10XNR	80	10	3/4"	277 mm	78 mm
HMM421F25XNR	104	25	3/4"	277 mm	78 mm
HMM422F03/(06)XNR1	100/(113)	3/(6)	1"	390 mm	78 mm
HMM422F10XNR1	135	10	1"	390 mm	78 mm
HMM422F25XNR1	170	25	1"	390 mm	78 mm
High Pressure 420 bar	**FLOW**	**MICRON**	**THREAD**	**LENGTH**	**BOWL DIAMETER**
HPM282F03/(F06)XNR	26/(40)	3/(6)	1/2"	219 mm	70 mm
HPM282F10XNR	55	10	1/2"	219 mm	70 mm
HPM282F25XNR	80	25	1/2"	219 mm	70 mm
HPM421F03/(06)XNR	55/(65)	3/(6)	3/4"	277 mm	78 mm
HPM421F10XNR	80	10	3/4"	277 mm	78 mm
HPM421F25XNR	104	25	3/4"	277 mm	78 mm
HPM422F03/(06)XNR1	100/(113)	3/(6)	1"	390 mm	78 mm
HPM422F10XNR1	135	10	1"	390 mm	78 mm
HPM422F25XNR1	170	25	1"	390 mm	78 mm
HPM621F10XNR	145	10	1"	273 mm	110 mm
HPM621F25XNR	190	25	1"	273 mm	110 mm
HPM622F10XNR1	300	10	1 1/4"	393 mm	110 mm
HPM622F25XNR1	345	25	1 1/4"	393 mm	110 mm

INDICATORS (TO ADD INDICATORS PLEASE ADD CODE BELOW AND DELETE T2 CODE ABOVE)	
DV500	VISUAL INDICATOR
DE500	ELECTRICAL VISUAL INDICATOR

TEL 0118 976 1616 AX 0118 976 1626

back to content page

MICRO CYLINDERS

DOUBLE ACTING MICRO CYLINDERS

INLET PORT CAN BE ROTATED TO SUIT APPLICATION
SURFACE PLATED TO PREVENT CORROSION

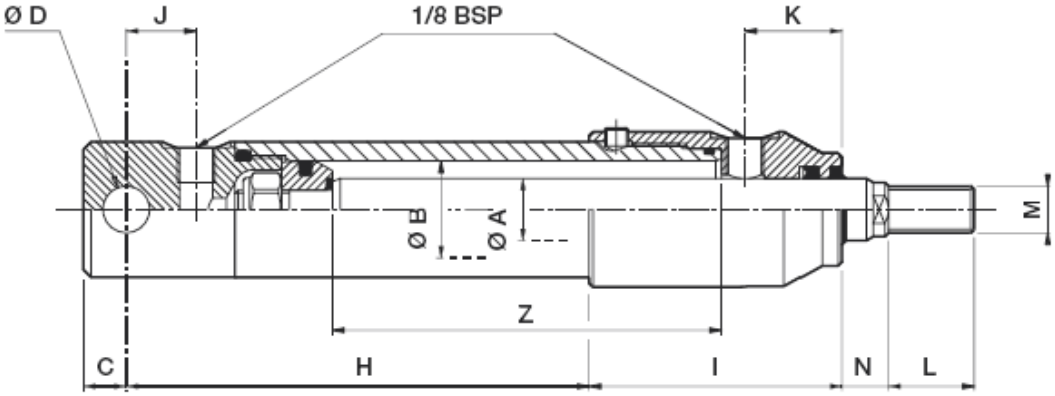

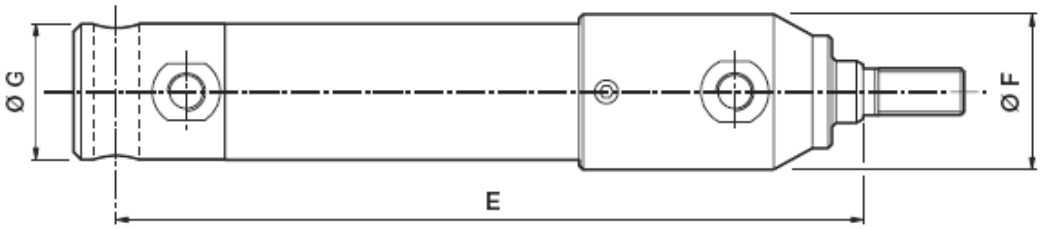

REF. ARTIKEL	ØA	ØB	Z COURSE / STROKE / HUB	E	C	D	F	G	H	I	J	K	L	M	N	Vol. (cm³)	Poids Weight Gewicht (Kg)
71220/25	12	20	25	118	9	10	35	28	47	60	15	23,5	18	M10	11	12	0.58
71220/50			50	143	9	10	35	28	72	60	15	23,5	18	M10	11	20	0.66
71220/80			80	173	9	10	35	28	102	60	15	23,5	18	M10	11	29	0.76
71625/50	16	25	50	146	11	12	40	35	69	65	18	25	22	M12	12	31	0.94
71625/100			100	196	11	12	40	35	119	65	18	25	22	M12	12	56	1.22
71625/150			150	246	11	12	40	35	169	65	18	25	22	M12	12	80	1.5
71625/200			200	296	11	12	40	35	219	65	18	25	22	M12	12	105	1.78

TRAILER BRAKE CYLINDERS

SUPPLIED WITH A SLOTTED CLEVIS YOKE TO GIVE FREE MOVEMENT TO THE BRAKE LEVER IN MECHANICAL BRAKING APPLICATIONS, 1/4" BSP CONNECTION
20 mm ROD GIVES A THRUST OF 3142 N @ 100 BAR
25 mm ROD GIVES A THRUST OF 4909 N @ 100 BAR

Also available with Square or Round Axle mounting and external springs...

PART RE	ROD SIZE
SRBR20SL	20 mm
SRBR25SL	25 mm

TEL 0118 976 1616 FAX 0118 976 1626

back to content page

SINGLE ACTING CYLINDERS

Rod Sizes 25mm, 30mm & 40mm

Ø A
Ø25 → Ø40

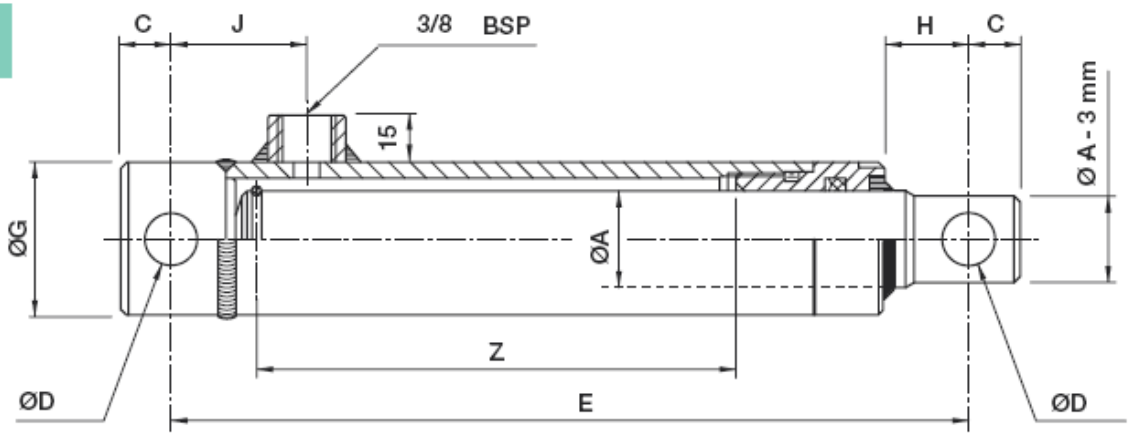

Part Number	Dia A	STROKE mm	E	C	D	G	H	J	Vol. Ltr	Weight Kg
625/10	25	100	190	14	14.2	40	24	40	0.08	2
625/20	25	200	290	14	14.2	40	24	40	0.15	3
625/30	25	300	390	14	14.2	40	24	40	0.25	4
630/2	30	200	300	18	16.2	50	26	42	0.25	4
630/3	30	300	400	18	16.2	50	26	42	0.35	5
630/4	30	400	500	18	16.2	50	26	42	0.45	7
630/5	30	550	650	18	16.2	50	26	42	0.65	8
630/7	30	700	800	18	16.2	50	26	42	0.80	10
640/2	40	200	330	22	23	60	32	47	0.40	6
640/3	40	300	430	22	23	60	32	47	0.60	9
640/4	40	400	530	22	23	60	32	47	0.80	10
640/5	40	550	680	22	23	60	32	47	1.10	14
640/7	40	700	830	22	23	60	32	47	1.40	16

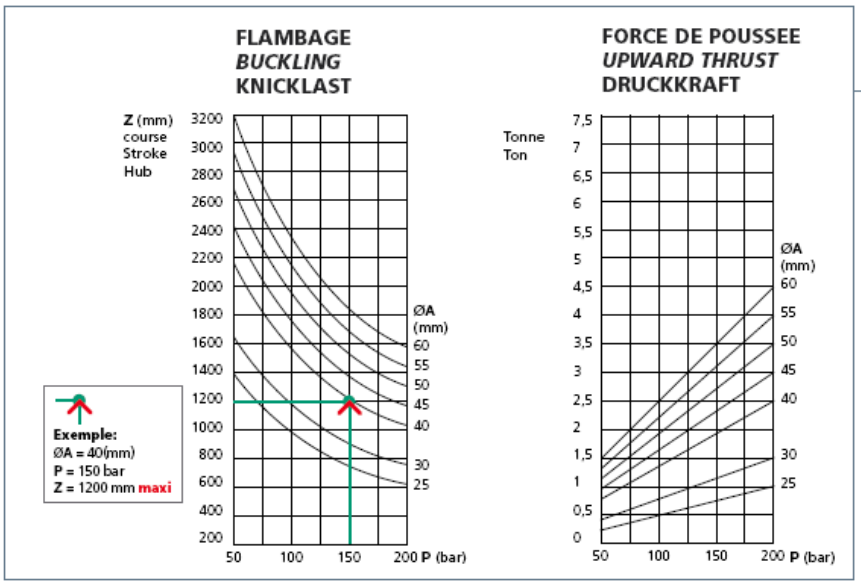

TEL 0118 976 1616 FAX 0118 976 1626

back to content page

SINGLE ACTING CYLINDERS

Rod Sizes of 45mm, 50mm, 55mm, 60mm & 70mm

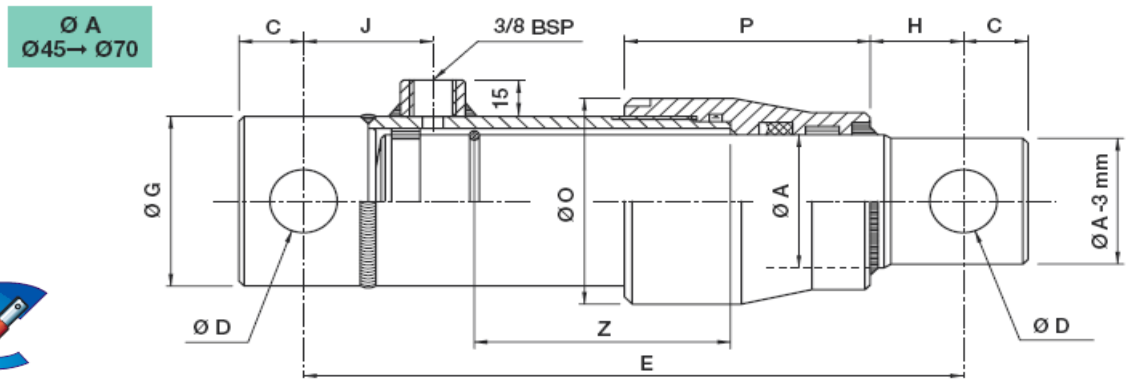

Part Number	Dia A	STROKE mm	E	C	D	G	H	J	O	P	Vol. Ltr	Weight Kg
645/2	45	200	330	22	23	60	34	47	70	77	0.40	8
645/3	45	300	430	22	23	60	34	47	70	77	0.60	10
645/4	45	400	530	22	23	60	34	47	70	77	0.80	12
645/5	45	550	680	22	23	60	34	47	70	77	1.10	16
645/7	45	700	830	22	23	60	34	47	70	77	1.40	19
650/2	50	200	360	25	25.5	65	49	50	75	80	0.50	9
650/3	50	300	460	25	25.5	65	49	50	75	80	0.70	12
650/4	50	400	560	25	25.5	65	49	50	75	80	0.95	14
650/5	50	550	710	25	25.5	65	49	50	75	80	1.30	18
650/7	50	700	860	25	25.5	65	49	50	75	80	1.65	23
655/3	55	300	460	25	25.5	70	41	50	85	95	0.85	14
655/5	55	550	710	25	25.5	70	41	50	85	95	1.55	22
655/7	55	700	860	25	25.5	70	41	50	85	95	2.00	25
660/2	60	200	360	25	25.5	75	36	50	90	95	0.65	15
660/3	60	300	460	25	25.5	75	36	50	90	95	1.00	17
660/4	60	400	560	25	25.5	75	36	50	90	95	1.35	20
660/5	60	550	710	25	25.5	75	36	50	90	95	1.85	26
660/7	60	700	860	25	25.5	75	36	50	90	95	2.35	32
670/3	70	300	509	30	30.5	85	66	55	100	95	1.35	22.5
670/4	70	400	609	30	30.5	85	66	55	100	95	1.75	26.5
670/5	70	500	709	30	30.5	85	66	55	100	95	2.15	30.5

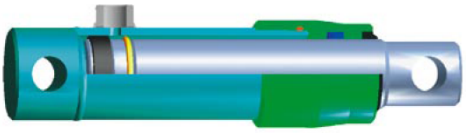

back to content page

TEL 0118 976 1616 FAX 0118 976 1626

DOUBLE ACTING CYLINDERS

Double Acting Cylinders with Rod sizes from 20 mm up to 70 mm

Maximum working pressure 200 bar,
Compact polyurethane Seal + 1 wiper seal
and a guide ring of acetal resin.

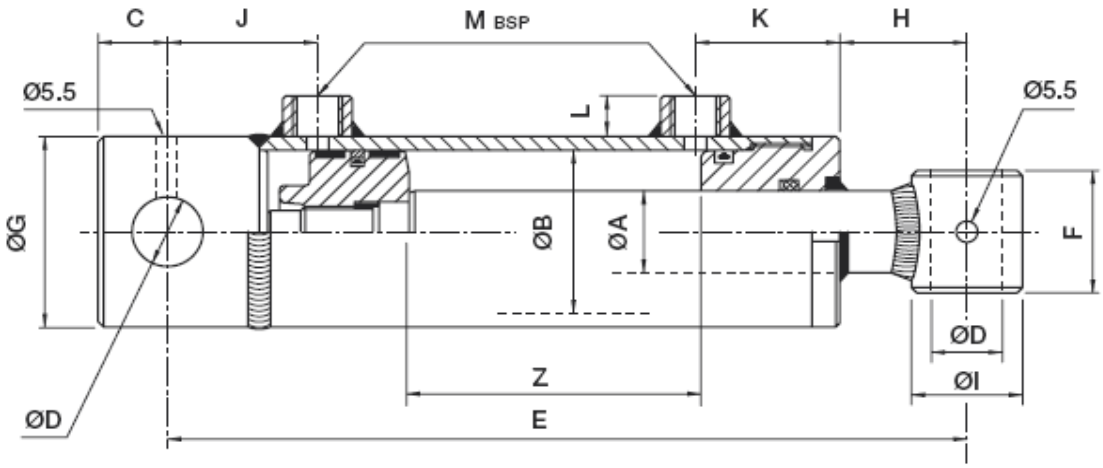

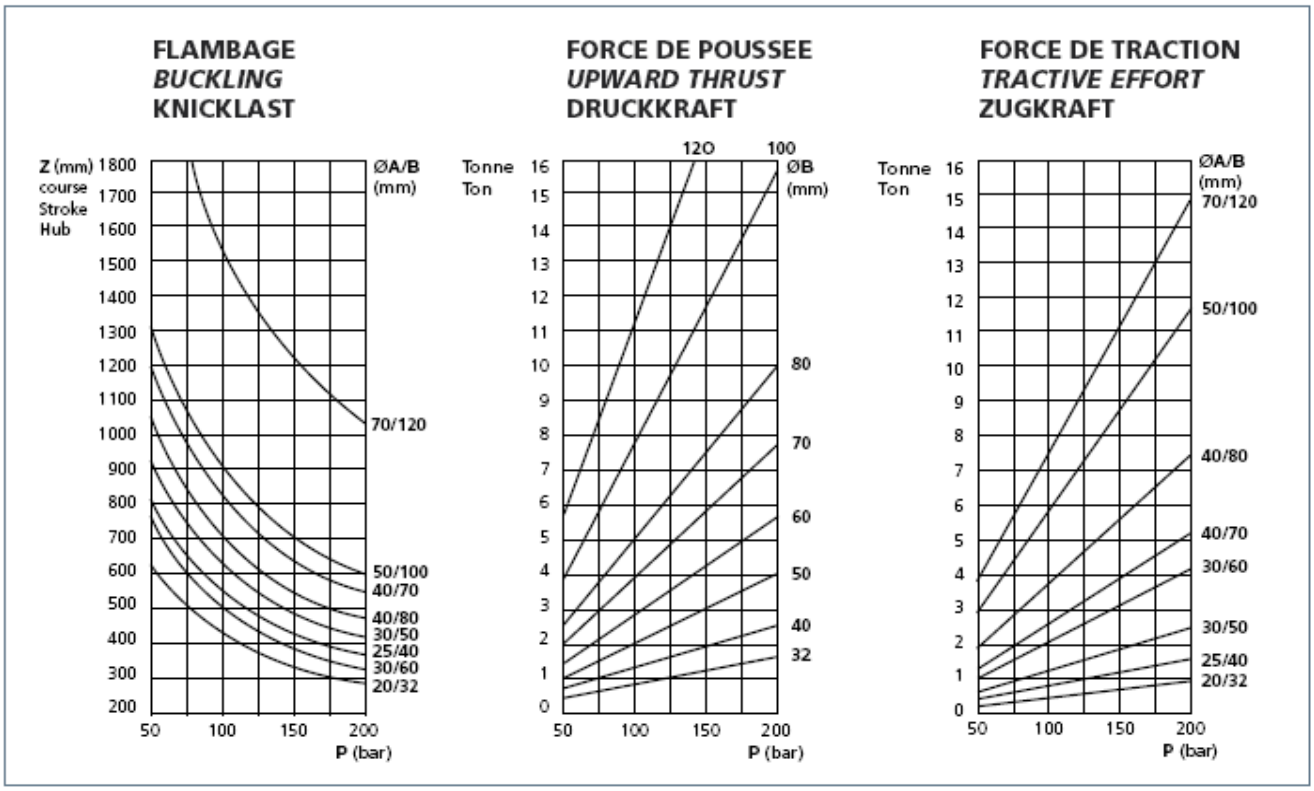

TEL 0118 976 1616 FAX 0118 976 1626

back to content page

DOUBLE ACTING CYLINDERS

Part Re	Dia A	Dia B	STROKE mm	E	C	D	F	G	H	I	J	K	L	M	Vol. Ltr	Weight Kg
700/05	20	32	50	205	17	16.2	35	40	28	30	30	35	13	1/4"	0.05	1.9
700/10	20	32	100	255	17	16.2	35	40	28	30	30	35	13	1/4"	0.10	2.2
700/15	20	32	150	305	17	16.2	35	40	28	30	30	35	13	1/4"	0.13	2.6
700/20	20	32	200	355	17	16.2	35	40	28	30	30	35	13	1/4"	0.17	2.9
700/30	20	32	300	455	17	16.2	35	40	28	30	30	35	13	1/4"	0.25	3.6
701/1	25	40	100	270	18	20.5	40	50	65	35	38	40	15	3/8"	0.15	3.7
701/2	25	40	200	370	18	20.5	40	50	65	35	38	40	15	3/8"	0.25	4.5
701/3	25	40	300	470	18	20.5	40	50	65	35	38	40	15	3/8"	0.40	5.5
701/4	25	40	400	570	18	20.5	40	50	65	35	38	40	15	3/8"	0.50	6.5
701/5	25	40	500	670	18	20.5	40	50	65	35	38	40	15	3/8"	0.65	8.5
702/1	30	50	100	300	22	25.5	45	60	85	40	42	43	15	3/8"	0.20	4
702/2	30	50	200	400	22	25.5	45	60	85	40	42	43	15	3/8"	0.40	5
702/3	30	50	300	500	22	25.5	45	60	85	40	42	43	15	3/8"	0.60	6
702/4	30	50	400	600	22	25.5	45	60	85	40	42	43	15	3/8"	0.80	8
702/5	30	50	500	700	22	25.5	45	60	85	40	42	43	15	3/8"	1.00	10
702/6	30	50	600	800	22	25.5	45	60	85	40	42	43	15	3/8"	1.20	12
702/7	30	50	700	900	22	25.5	45	60	85	40	42	45	15	3/8"	1.40	14
703/1	30	60	100	300	22	25.5	45	70	83	40	42	45	15	3/8"	0.30	6
703/2	30	60	200	400	22	25.5	45	70	83	40	42	45	15	3/8"	0.60	7
703/3	30	60	300	500	22	25.5	45	70	83	40	42	45	15	3/8"	0.90	9
703/4	30	60	400	600	22	25.5	45	70	83	40	42	45	15	3/8"	1.15	11
703/5	30	60	500	700	22	25.5	45	70	83	40	42	45	15	3/8"	1.45	13
703/6	30	60	600	800	22	25.5	45	70	83	40	42	45	15	3/8"	1.75	15
703/7	30	60	700	900	22	25.5	45	70	83	40	42	45	15	3/8"	2.00	17
704/2	40	70	200	410	28	30.5	55	70	82	50	47	49	15	3/8"	0.85	11
704/3	40	70	300	510	28	30.5	55	80	82	50	47	49	15	3/8"	1.20	13
704/4	40	70	400	610	28	30.5	55	80	82	50	47	49	15	3/8"	1.60	15
704/5	40	70	500	710	28	30.5	55	80	82	50	47	49	15	3/8"	2.00	17
704/6	40	70	600	810	28	30.5	55	80	82	50	47	49	15	3/8"	2.35	19
704/7	40	70	700	910	28	30.5	55	80	82	50	47	49	15	3/8"	2.75	21
705/2	40	80	200	410	28	30.5	55	90	70	50	47	54	15	3/8"	1.10	13
705/3	40	80	300	510	28	30.5	55	90	70	50	47	54	15	3/8"	1.60	15
705/4	40	80	400	610	28	30.5	55	90	70	50	47	54	15	3/8"	2.10	18
705/5	40	80	500	710	28	30.5	55	90	70	50	47	54	15	3/8"	2.60	21
705/6	40	80	600	810	28	30.5	55	90	70	50	47	54	15	3/8"	3.10	24
705/7	40	80	700	910	28	30.5	55	90	70	50	47	54	15	3/8"	3.60	27
706/3	50	100	300	525	28	30.5	70	115	75	60	47	60	20	1/2"	2.50	27
706/4	50	100	400	625	28	30.5	70	115	75	60	47	60	20	1/2"	3.30	30
706/5	50	100	500	725	28	30.5	70	115	75	60	47	60	20	1/2"	4.10	35
706/7	50	100	700	925	28	30.5	70	115	75	60	47	60	20	1/2"	5.65	40
706/9	50	100	900	1125	28	30.5	70	115	75	60	47	60	20	1/2"	7.25	42
707/5	70	120	500	770	40	40.5	80	140	55	80	65	82	20	1/2"	5.90	60
707/10	70	120	1000	1270	40	40.5	80	140	55	80	65	82	20	1/2"	11.55	90

TEL 0118 976 1616 FAX 0118 976 1626

back to content page

TOPLINK CYLINDERS

Standard Toplink Cylinders available with Pilot Check Valves if required

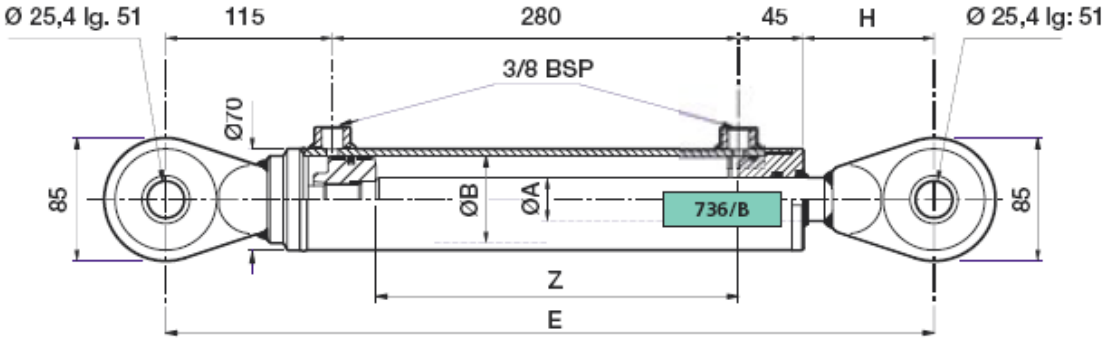

REF. ARTIKEL	ØA	ØB	Z COURSE STROKE HUB	E	H	Vol. (Ltr)	Poids Weight Gewicht (Kg)
736/B	30	60	250	530	90	0.75	9,8
736/BC				565	125	0.75	10,8

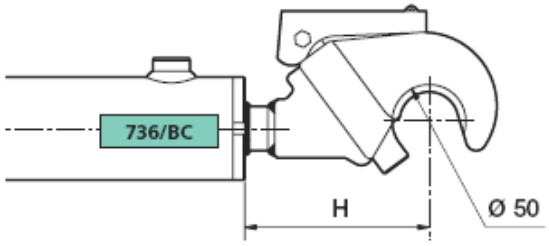

Adjustable Rod Top Link Cylinders available with Pilot Check Valve if required

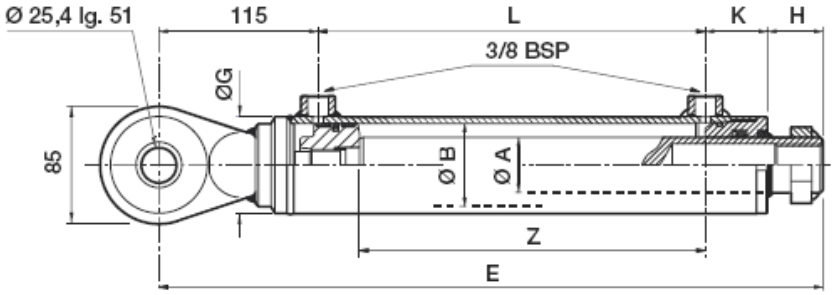

REF. ARTIKEL	ØA	ØB	Z COURSE-*STROKE*-HUB	E	G	H	K	L	Vol. (Ltr)	Poids-*Weight*-Gewicht (Kg)
746/B1	40	60	250	480	70	40	45	280	0.75	8,9
746/C1			300	530	70	40	45	330	0.90	9,8
747/B1	45	70	250	485	80	39	49	282	1.00	11,2
747/C1			300	535	80	39	49	332	1.20	12,3

OPTION

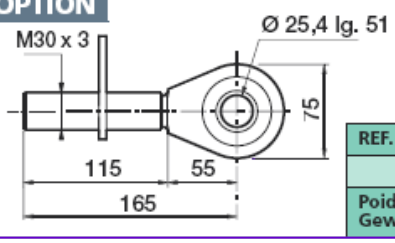

REF. ARTIKEL Nr	
RAR253P	
Poids - Weight Gewicht - (Kg)	1,5

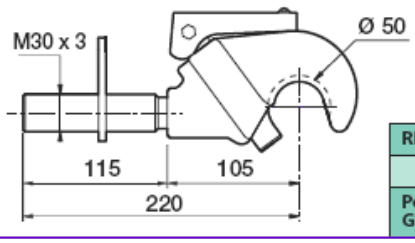

REF. ARTIKEL Nr	
RAC253P	
Poids - Weight Gewicht - (Kg)	2,5

TEL 0118 976 1616 FAX 0118 976 1626

back to content page

HYDRAULIC MOTORS

MM (EPMM) MINI MOTORS

Low Speed High Torque compact Motor which can be side or rear ported with shaft sizes of 14 or 16 mm straight with Parallel key & 16.5 mm Splined shaft

EPMM	8	12.5	20	32	40	50
Displacement (cm3/rev)	8.2	12.9	20	31.8	40	50
Max Intermitt. Speed (rpm)	2440	1940	1250	790	625	500
Max. Peak Torque (daNm)	2.1	3.3	5.1	6.4	6.6	8
Max. Peak Pressure (bar)	200	200	200	200	140	125
Max. Intermitt. Power (kW)	2.6	3.2	3.2	3.2	3.0	2.1

Shaft Options :-	SH	16.5 mm Splined, B17 x 14 DIN 5482
	CK	14 mm Straight Parallel, Key 5x5x16 DIN 6885
Flange Options :-	F	2 bolt Mounting Flange collar
X LINE RELIEF VALVE	D	DUAL X LINE RELIEF VALVE

MP (EPM) MOTORS

Low Speed High Torque Motors with 2 bolt mounting Flange and various shaft options. Including 25 mm, 32 mm or 1" Straight parallel key and 6 splined parallel, etc Gerotor type Motors used where the power is needed up to 11 Kw.

MP	25	32	40	50	80	100	125	160	200	250	315	400
Displacement (cm3/rev)	25	32	40	49	79	99	123	158	198	247	317	396
Max Intermitt. Speed (rpm)	1800	1720	1750	1515	945	755	605	472	378	303	236	189
Max. Peak Torque (daNm)	6.7	8.6	10.7	14.3	22.4	27.5	36.5	43.8	55	68.5	85	85.4
Max. Peak Pressure (bar)	225	225	225	225	225	225	225	225	225	225	225	180
Max. Intermitt. Power (kW)	6.1	7.8	11.6	12.2	12.5	12.8	12	12.1	12	12	9	7.8

Shaft Options :-	C	25 mm Parallel, A8x7x32 DIN 6885
	CO	1" Straight Parallel, Key 1/4"x1/4"x1.1/4" BS46
	SH	25.4 mm (1") 6 TOOTH SPLINE
	K	Tapered 1:10 (28mm, 56mm under seal) Parallel key B5x5x14
	OB	Tapered 1:8 (35 MM under seal), Parallel key 5/16"x5/16"x1.1/4" BS46
Flange Options :-	W	Wheel Motor, 4 bolt pcd 103mm
Seals, Bearings :-	D	High Pressure Seals, max. return line pressure without drain 150 bar
	N	with Needle Bearings for Axial loads
X LINE RELIEF VALVE	KPDRH	DUAL X LINE RELIEF VALVE PORT MOUNTING
DUAL OVERCENTER VALVE	KPBR250	DUAL OVERCENTER VALVE

WHEEL MOTORS , HYDRAULIC BRAKES , ETC, PLEASE CONTACT US..

TEL 0118 976 1616 FAX 0118 976 1626

back to content page

HYDRAULIC MOTORS

MR (EPRM) MOTORS

Low Speed High Torque Motors with 2 bolt mounting Flange and various shaft options including 25 mm, 32 mm or 1" Straight parallel key and 6 Splined parallel, etc Geroler type units that are known for dependability and performance.

MR	50	80	100	125	160	200	250	315	400
Displacement (cm3/rev)	51	80	99	125	159	199	250	315	397
Max Intermitt. Speed (rpm)	970	940	750	600	470	375	300	240	190
Max. Peak Torque (daNm)	17	27	32	37	46	56	71	83	87
Max. Peak Inlet Pressure (bar)	225	225	225	225	225	225	225	225	225
Max. Intermitt. Output Power (kW)	8.5	15	15	14.5	14	11.5	10.5	9.6	8.8

Shaft Options :-	C	25 mm Parallel, A8x7x32 DIN 6885
	CO	1" Straight Parallel, Key 1/4"x1/4"x1.1/4" BS46
	SH	25.4 mm (1") 6 TOOTH SPLINE
	K	Tapered 1:10 (28mm, 56mm under seal) Parallel key B5x5x14
	OB	Tapered 1:8 (35 MM under seal), Parallel key 5/16"x5/16"x1.1/4" BS46
Flange Options :-	W	Wheel Motor, 4 bolt pcd 103mm
Seals, Bearings :-	D	High Pressure Seals, max. return line pressure without drain 150 bar
	N	with Needle Bearings for Axial loads
X LINE RELIEF VALVE	KPDRH210	DUAL RELIEF VALVE DIRECT PORT MOUNTING
DUAL OVERCENTER VALVE	KPBR250	DUAL OVERCENTER VALVE DIRECT PORT MOUNTING

MS (EPMS) MOTORS

EPMS Motors are comprised of rotor, stator and rollers. They have increased motor performance and efficiency and with the rollers reduce friction and increase the life of the motor. The output shaft is mounted into a tapered roller bearing which allows very high radial and axial loads.

MS	80	100	125	160	200	250	315	400
Displacement (cm3/rev)	80.5	100	125.7	159.7	200	250	314.9	397
Max Intermitt. Speed (rpm)	1000	900	720	560	450	360	285	225
Max. Peak Torque (daNm)	26	32	40	51	65	69	84	85
Max. Peak Inlet Pressure (bar)	300	300	300	300	300	300	300	300
Max. Intermitt. Output Power (kW)	19	21	21	21	17.5	15	13.5	13

Shaft Options :-	C	32 mm Straight, Parallel Key A10x8x45 DIN 6885
	CO	1 1/4" Straight, Parallel, Key 5/16"x5/16"x1 1/4" BS46
	SH	1 1/4" Splined 14 Tooth ANS B92.1-1976
	K	Tapered 1:10 (35 mm under seal) Parallel key B6x6x20 DIN 6885
	SL	34.85 mm P.T.O. DIN 9611 FORM 1
Flange Options :-	W	Wheel Mounting Flange
Porting :-	E	Rear Ports
Motor Brake	B	Motor with Drum Brake
X LINE RELIEF VALVE	KPDSH	DUAL RELIEF VALVE DIRECT PORT MOUNTING
DUAL OVERCENTER VALVE	KPBS250	DUAL OVERCENTER VALVE DIRECT PORT MOUNTING

CROSSLINE RELIEF, ANTI-CAVITATION VALVES..... SEE PAGE 93

TEL 0118 976 1616 FAX 0118 976 1626

back to content page

HYDRAULIC MOTORS

MT (EPMT) MOTORS

Disc Valve Hydraulic Motors with 4 bolt mounting Flange and various shaft options Including 40 mm & 1 1/2" Straight parallel key, Taper 1:10 and 1 1/2" 17 Splined parallel. The Roller Gear set minimizes friction and increases efficiency while providing smooth output shaft rotation.

MT	160	200	250	315	400	500	630	725
Displacement (cm3/rev)	161.1	210.4	251.8	326.3	410.9	523.6	631.2	724.3
Max Speed (rpm)	625	625	500	380	305	240	197	164
Max Intermitt. Speed (rpm)	780	750	600	460	365	285	234	199
Max. Peak Torque (daNm)	66	82	102	133	144	160	180	200
Max. Inlet Pressure (bar)	250	250	250	250	250	250	250	250
Max. Peak Inlet Pressure (bar)	300	300	300	300	300	300	300	300
Max. Intermitt. Output Power (kW)	32	40	40	40	35	30	27.5	26.8

Shaft Options :-	**C**	40 mm Parallel, A12x8x70 DIN 6885
	CO	1 1/2" Straight Parallel, Key 3/8"x3/8"x2.1/4" BS46
	SH	1 1/2" , 17 Tooth Splined DP12/24 ANSI B92.1-1976
	SL	Dia 34.85 PTO 6 Tooth Splined DIN 9611 FORM 1
	K	Dia 45 mm Tapered 1:10 M30x2 Parallel key B12x8x28
Porting	**E**	Rear Ports
Flange Options :-	**W**	Wheel Motor, 4 bolt pcd 200mm
Seals, Bearings :-	**U**	High Pressure Seals, max. return line pressure without drain 150 bar

MV (EPMV) MOTORS

Disc Valve Hydraulic Motors with 4 bolt mounting Flange and various shaft options Including 50 mm & 2 1/4" Straight parallel key, Taper 1:10 and 2 1/8" 16 Splined parallel. The Roller Gear set minimizes friction and increases efficiency while providing smooth output shaft rotation.

MV	315	400	500	630	800
Displacement (cm3/rev)	314.5	400.9	499.6	629.1	801.8
Max Speed (rpm)	510	500	400	315	250
Max Intermitt. Speed (rpm)	630	600	480	380	300
Max. Peak Torque (daNm)	129	164	205	221	247
Max. Inlet Pressure (bar)	200	200	200	180	160
Max. Peak Inlet Pressure (bar)	280	280	280	240	210
Max. Intermitt. Output Power (kW)	51	64	64	56	48

Shaft Options :-	**C**	50 mm Straight, Parallel Key A14x9x70 DIN 6885
	CO	2 1/4" Straight, Parallel, Key 1/2" x 1/2" x 2 1/4" BS46
	SH	2 1/8" Splined 16 Tooth ANS B92.1-1976
	K	Dia 60 mmTapered 1:10 Parallel key B16x10x32 DIN 6885
	SL	34.85 mm P.T.O. DIN 9611 FORM 1
Flange Options :-	**W**	Wheel Mounting Flange
	C	SAE ' C' Mount
Porting :-	**E**	Rear Ports

TEL 0118 976 1616 FAX 0118 976 1626

back to content page

VALVES FOR HYDRAULIC MOTORS

Dual Pressure Relief Valves & Anti Cavitation Valves

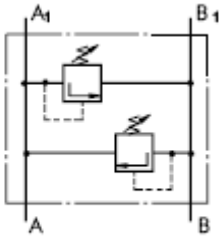

Dual Crossover Relief Valve

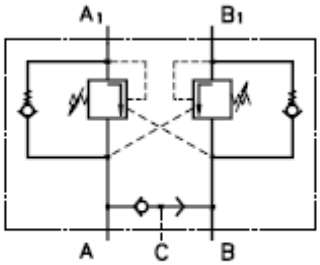

Dual Overcenter Valves with Brake Control

Motor Type	Dual Pressure Relief Pt.No	Max Flow lpm	Pressure Range bar	Overcentre valve With Brake control Pt.No	Max Flow lpm	Pressure Range bar
MP (EPM)	KPDR	60	30-100 50-210 80-300	KPBR	60	70-250
MR (EPRM)	KPDR	60	30-100 50-210 80-300	KPBR	60	70-250
MS (EPMS)	KPDS	60	30-100 50-210 80-300	KPBS	60	70-250
MT (EPMT)	KPDT	120	80-210	KPBT	100	70-250
MV (EPMV)	KPDV	200	10-100 20-250	KPBV	200	70-250

ORBITAL STEERING UNITS

Open Center - Load Reaction HKU(S)... /3

Open Center - Non Load Reaction HKU(S)... /4

Load Sensing HKU(S)... /5

(S) Version with built in check valves

Priority valves, Anti Cavitation valves etc

Steering Columns available in different variations and lengths

TEL 0118 976 1616 FAX 0118 976 1626

back to content page

HYDRAULIC POWER PACKS

Hydraulic Power Units
Designed and manufactured to Customer specifications.

12 & 24 Volt DC, 110 Volt AC,
Single Phase and Three phase.

Wander lead, Static box and Radio Control systems manufactured for individual power packs..
(...Please see pages 54 & 55)

TAIL LIFT PACKS

12 / 24 Volt DC

Gear Pump 3.1 cc / rev

Max Pressure 210 Bar (Set Pressure 180 bar)

1800W Electric Motor

Plastic Tank size 4 , 7 or 9 Litre capacity

Solenoid Lowering Valve

Available with 4 or 6 Metre Hand held Electric Cable control c/w Up & down buttons

PART No	VOLTAGE	TANK CAPACITY	HEIGHT mm	WIDTH mm	LENGTH
CHF12V4	12DC	4 LTR	198	127	439
CHF12V7	12DC	7 LTR	198	127	594
CHF12V9	12DC	9 LTR	198	127	721
CHF24V4	24DC	4 LTR	198	127	439
CHF24V7	24DC	7 LTR	198	127	594
CHF24V9	24DC	9 LTR	198	127	721

Optional Extras :-

CEBR	CETOP 3 VALVE MOUNTING FLANGE
CHFBC4	4 MTR WANDER LEAD CABLE & CONTROL
CHFBC6	6 MTR WANDER LEAD CABLE & CONTROL
CHFSB	SUPPORT BRACKET

TEL 0118 976 1616 FAX 0118 976 1626

back to content page

HYDRAULIC POWER PACKS

SINGLE & THREE PHASE POWER UNITS

POWER UNITS DESIGNED AND MANUFACTURED TO SPECIFICATION INCLUDING VALVE CONTROL SYSTEMS IN SINGLE AND 3 PHASE.

PLEASE CONTACT US WITH YOUR ENQUIRY :-

....Also available with Electric control Systems, please see pages 53 & 54

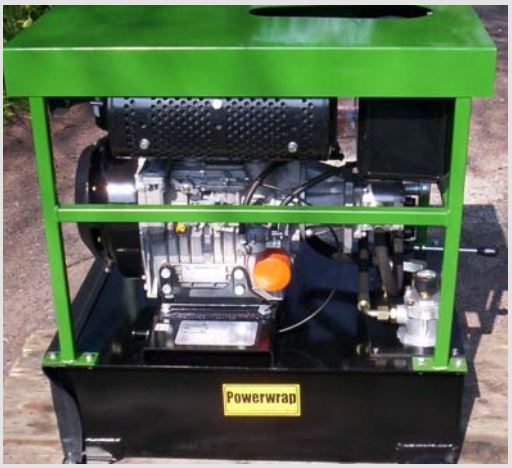

DIESEL & PETROL POWER UNITS

BESPOKE POWER UNITS DESIGNED AND

CONTRACTORS PACKS,
BALE WRAPPERS, ETC,...

VARIOUS POWER AND FLOW RATES.

ELECTRIC MOTORS

SINGLE & THREE PHASE MOTORS

Single Phase Industrial
Motors 0.18kW -4 Kw
TEFC. IP55
Aluminium Frame
Cap Start cap run or Permanent Cap

Three Phase Industrial Motors
0.37kW-300kW
2 Speed, TEFC. IP55
Brake Motors
Alloy/Cast Iron Frame

Full range of Couplings and Bellhousings
Available please see pages... 71 -75

TEL 0118 976 1616 FAX 0118 976 1626

back to content page

HEAT EXCHANGERS

Air and Oil Heat Exchangers designed to be used on the return line of the Hydraulic System.
The Aluminium cooler element provides a high conductivity and thermic exchange.
Three options available ‘ ST’ Standard and ‘SDT’ for high flows.
Nominal Pressure 25 bar, Test Pressure 35 bar. Maximum Temperature 120 ^{0}C

ST50 Suggested Oil Flow 10-80 lpm

TYPE	RPM	POWER Kw	Fan dia mm	dB (A)	Q air (m3/h)	Capacity (Ltr)	Weight (kg)	IP Rating
12 DC	3100	0.1	190	68	1300	0.48	6.5	67
24 DC	3000	0.1	190	68	1300	0.48	6.5	67

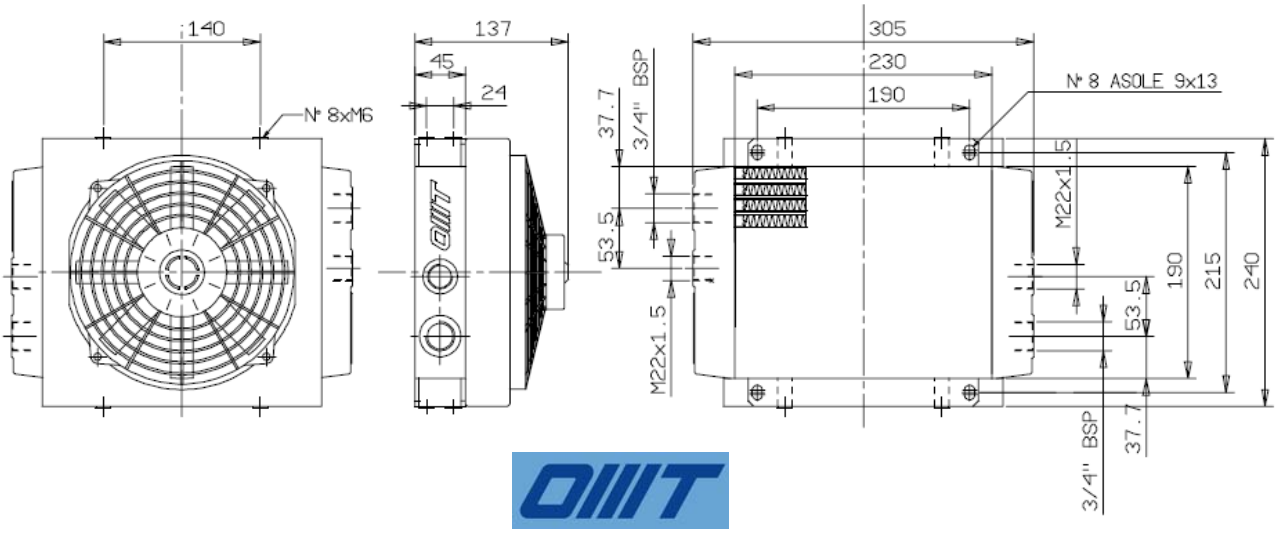

CORRECTION FACTOR

CST	10	15	20	32	40	50	60	80	100	200
F	0.51	0.66	0.76	1	1.22	1.4	1.6	1.9	2.1	3.4

DIAGRAMMA PERDITE DI CARICO (32 cst)
PRESSURE DROP DIAGRAM (32 cst)

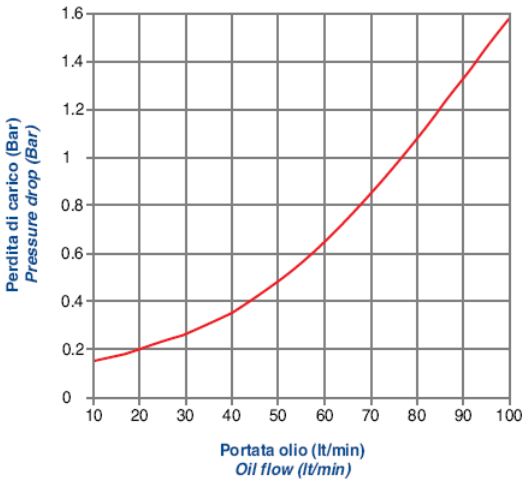

PERFORMANCE DIAGRAM

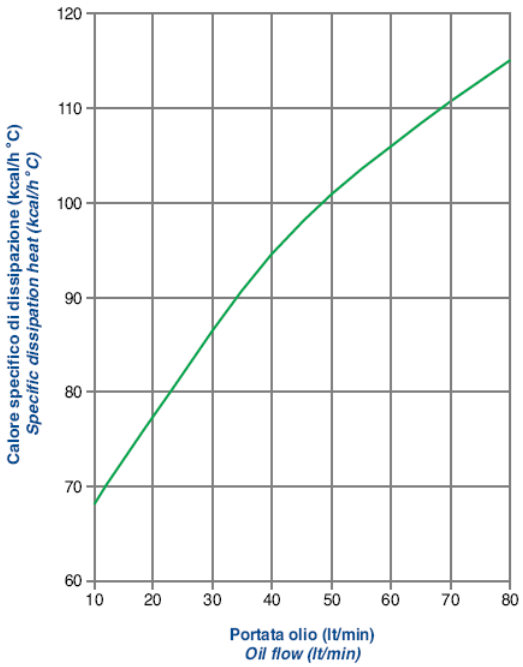

TEL 0118 976 1616 FAX 0118 976 1626

back to content page

HEAT EXCHANGERS

ST60 Suggested Oil Flow 20-130 lpm

TYPE	RPM	POWER Kw	Fan dia mm	dB (A)	Q air (m3/h)	Capacity (Ltr)	Weight (kg)	IP Rating
12 DC	3000	0.175	305	79	2100	1.5	7.5	67
24 DC	3000	0.175	305	82	2200	1.5	7.5	67

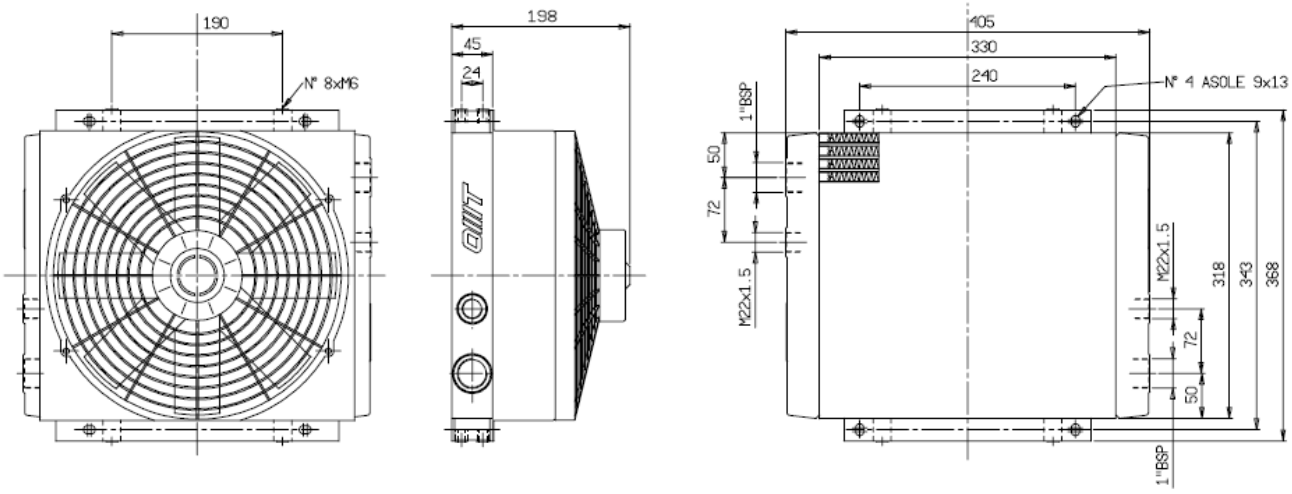

CORRECTION FACTOR

CST	10	15	20	32	40	50	60	80	100	200
F	0.51	0.66	0.76	1	1.22	1.4	1.6	1.9	2.1	3.4

DIAGRAMMA PERDITE DI CARICO (32 cst)
PRESSURE DROP DIAGRAM (32 cst)

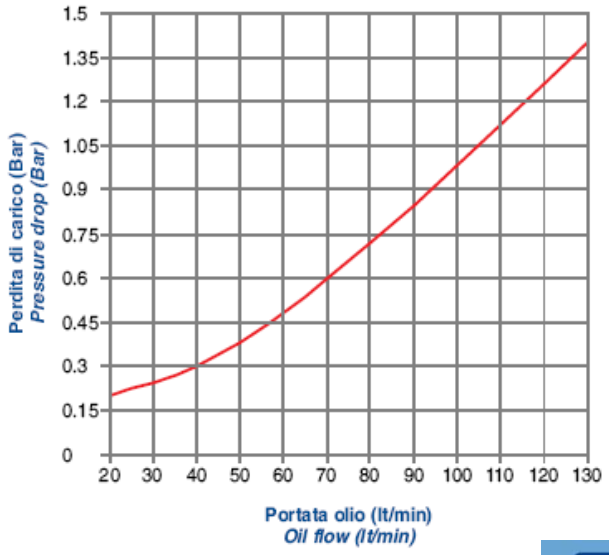

PERFORMANCE DIAGRAM

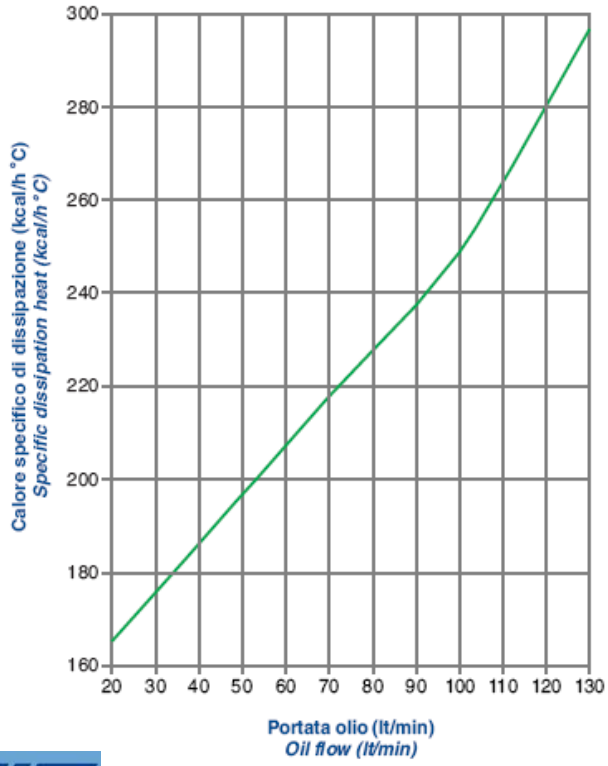

TEL 0118 976 1616 FAX 0118 976 1626

back to content page

HEAT EXCHANGERS

ST100 Suggested Oil Flow 30-140 lpm

TYPE	RPM	POWER Kw	Fan dia mm	dB (A)	Q air (m3/h)	Capacity (Ltr)	Weight (kg)	IP Rating
12 DC	3000	0.175	305	79	2100	1.5	8.5	67
24 DC	3000	0.175	305	82	2200	1.5	8.5	67

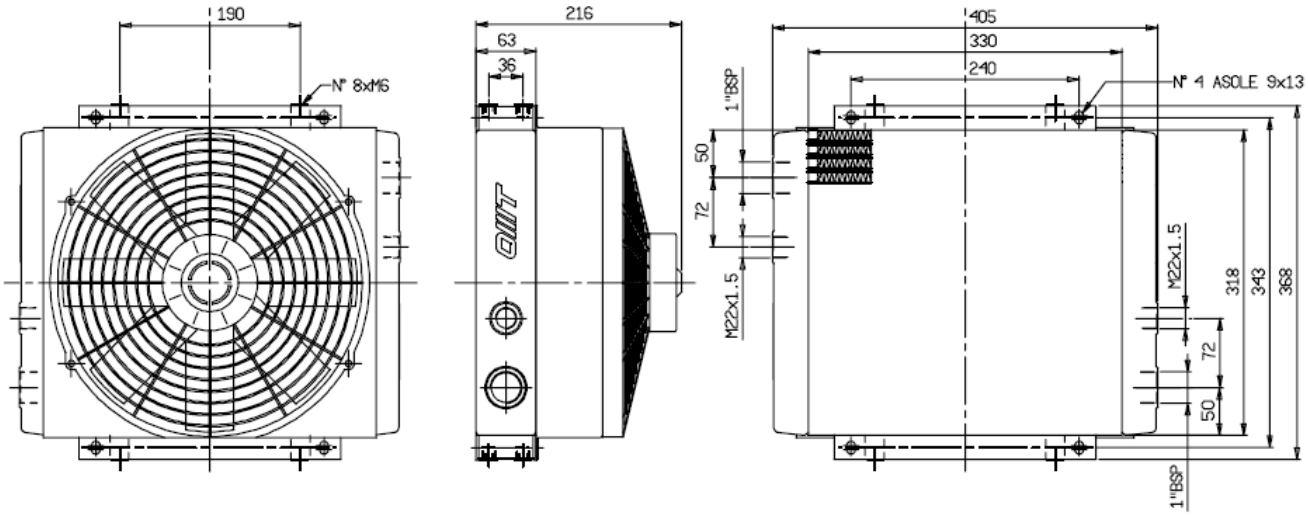

CORRECTION FACTOR

CST	10	15	20	32	40	50	60	80	100	200
F	0.51	0.66	0.76	1	1.22	1.4	1.6	1.9	2.1	3.4

DIAGRAMMA PERDITE DI CARICO (32 cst)
PRESSURE DROP DIAGRAM (32 cst)

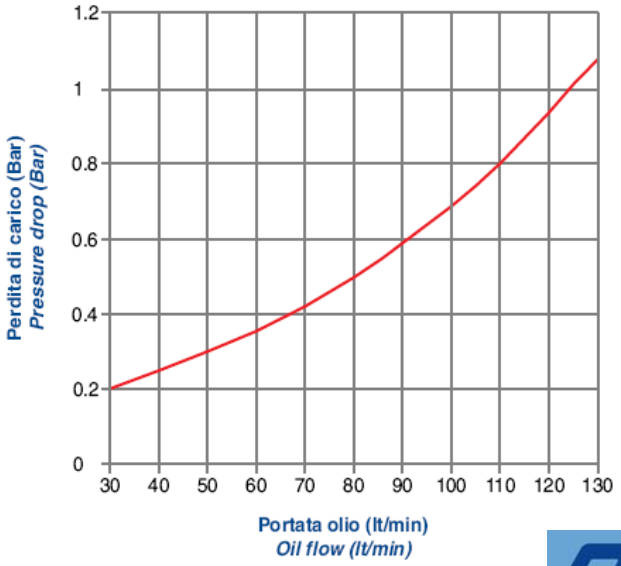

PERFORMANCE DIAGRAM

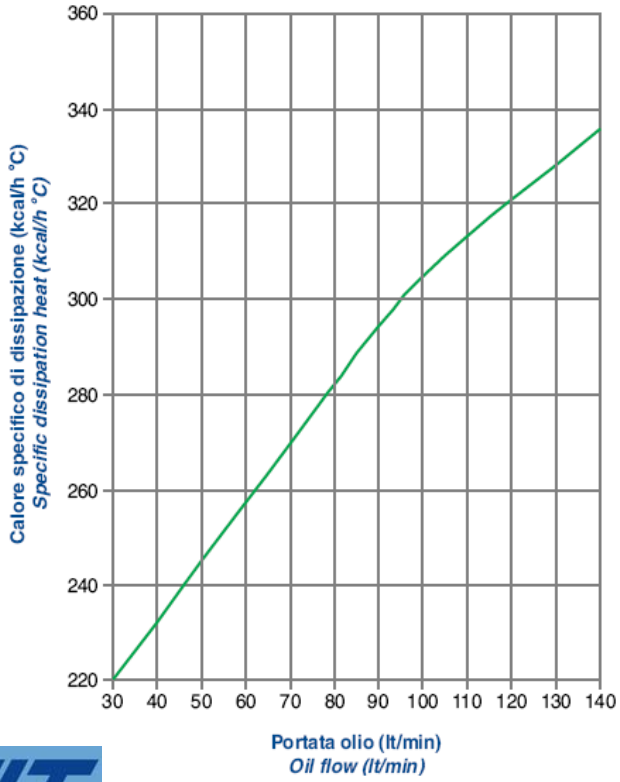

TEL 0118 976 1616 FAX 0118 976 1626

back to content page

HEAT EXCHANGERS

ST150 Suggested Oil Flow 35-140 lpm

TYPE	RPM	POWER Kw	Fan dia mm	dB (A)	Q air (m3/h)	Capacity (Ltr)	Weight (kg)	IP Rating
12 DC	3000	0.175	305	79	2100	1.5	14	67
24 DC	2500	0.176	306	82	2200	1.5	14	67

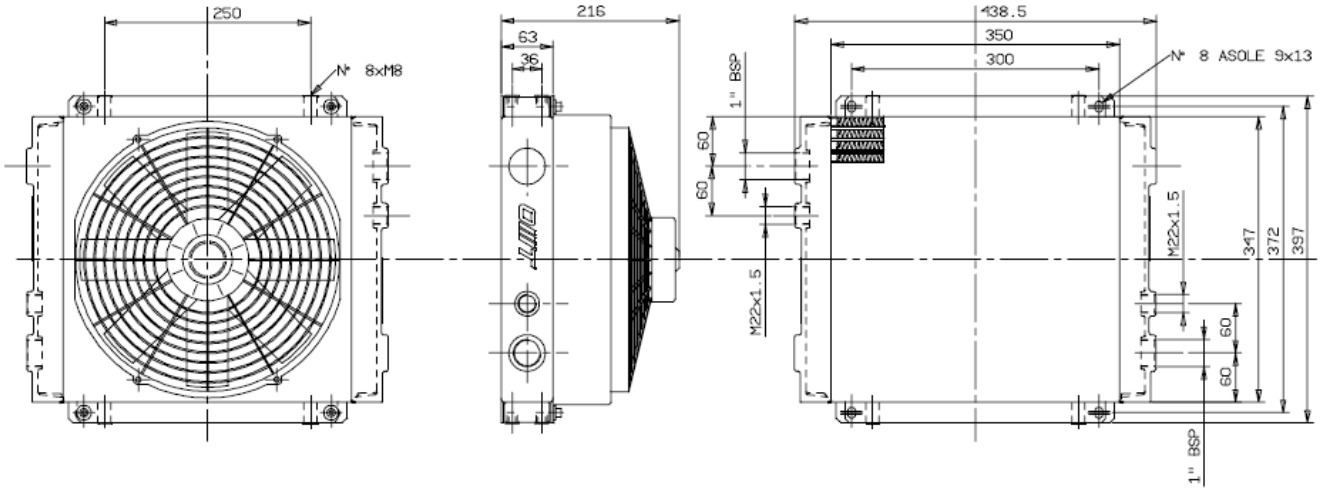

CORRECTION FACTOR

CST	10	15	20	32	40	50	60	80	100	200
F	0.51	0.66	0.76	1	1.22	1.4	1.6	1.9	2.1	3.4

DIAGRAMMA PERDITE DI CARICO (32 cst)
PRESSURE DROP DIAGRAM (32 cst)

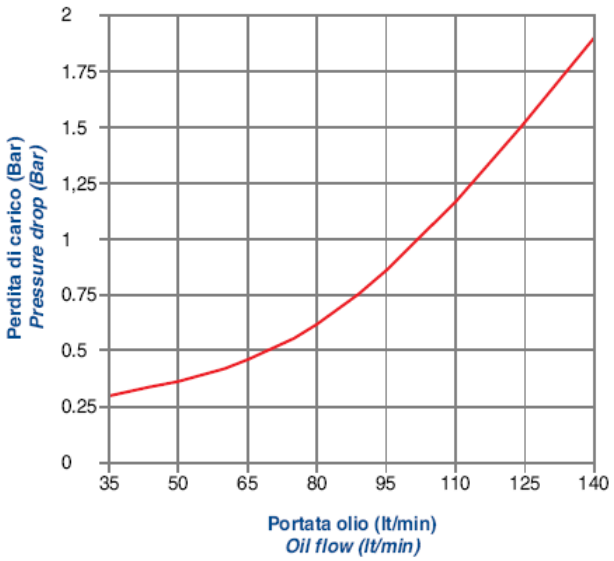

PERFORMANCE DIAGRAM

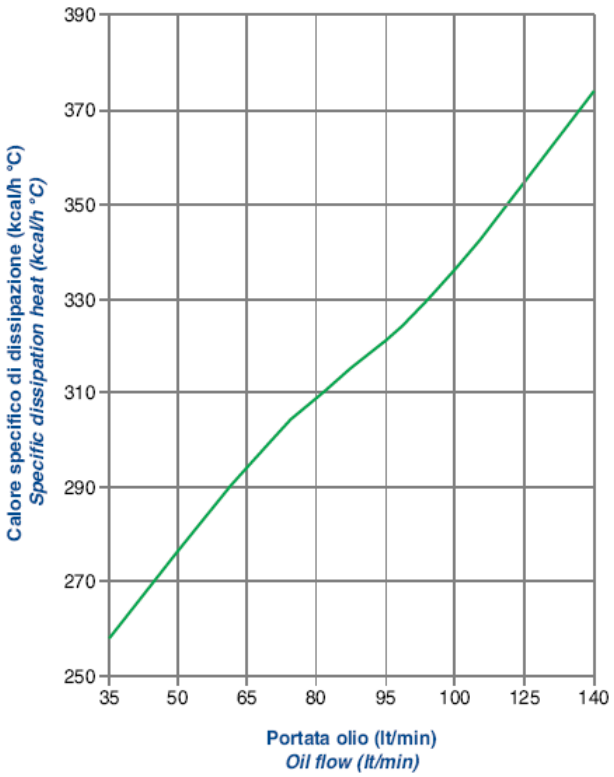

TEL 0118 976 1616 FAX 0118 976 1626

back to content page

HEAT EXCHANGERS

ST180 Suggested Oil Flow 80-180 lpm

TYPE	RPM	POWER Kw	Fan dia mm	dB (A)	Q air (m3/h)	Capacity (Ltr)	Weight (kg)	IP Rating
12 DC	2500	0.2	385	75	3200	2.6	20	65
24 DC	2500	0.2	385	75	3200	2.6	20	65

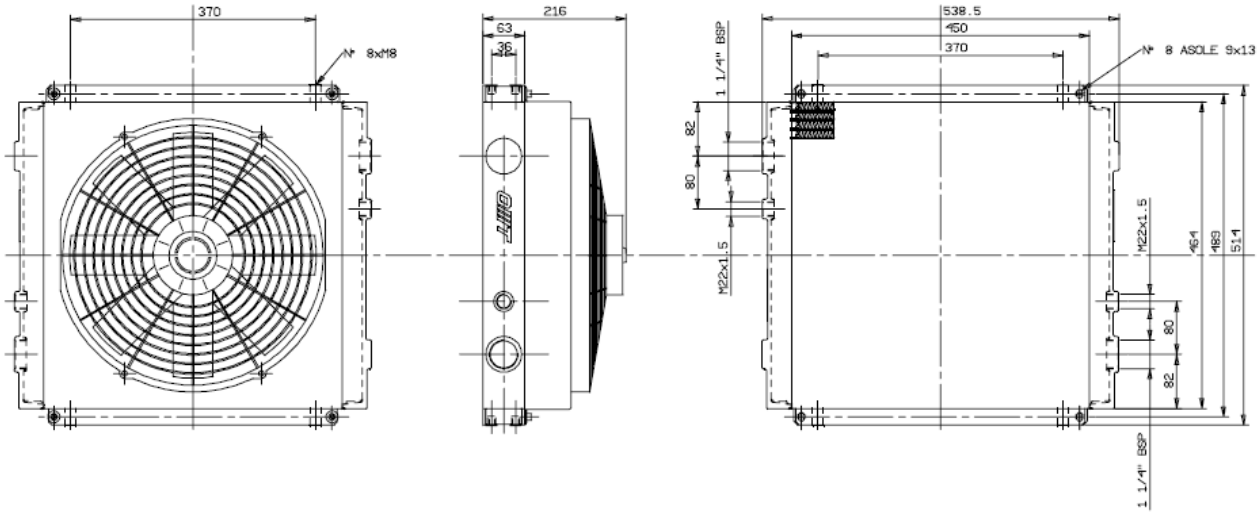

CORRECTION FACTOR

CST	10	15	20	32	40	50	60	80	100	200
F	0.51	0.66	0.76	1	1.22	1.4	1.6	1.9	2.1	3.4

DIAGRAMMA PERDITE DI CARICO (32 cst)
PRESSURE DROP DIAGRAM (32 cst)

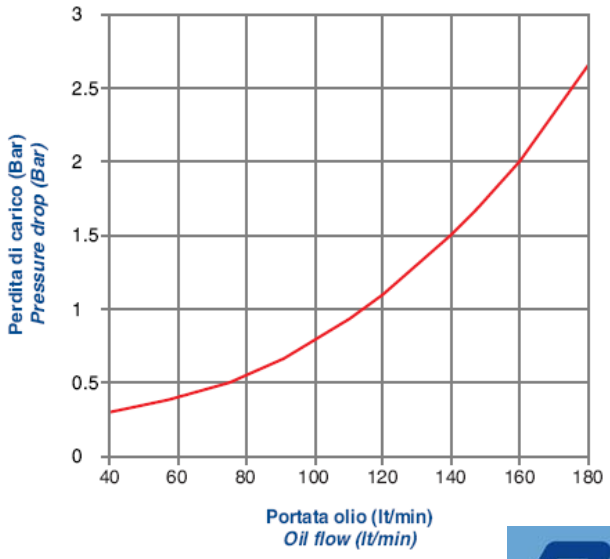

PERFORMANCE DIAGRAM

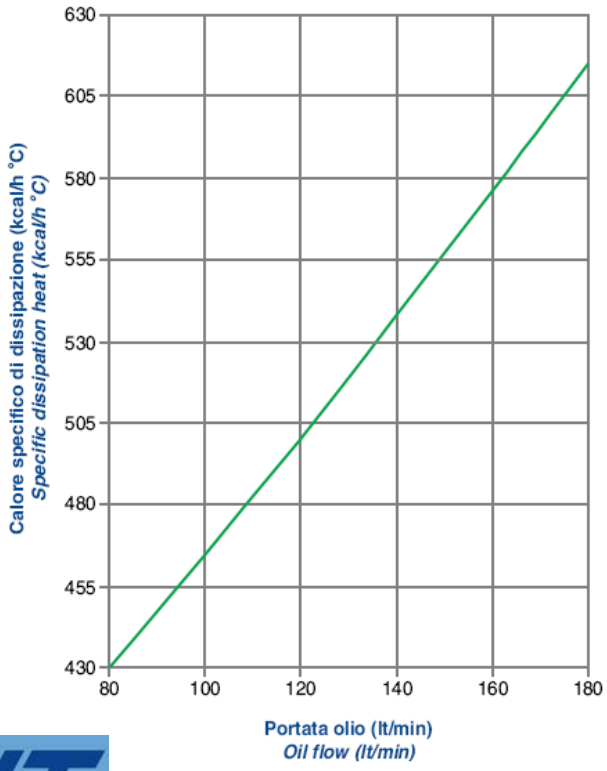

TEL 0118 976 1616 FAX 0118 976 1626

back to content page

HEAT EXCHANGERS

SDT50 Suggested Oil Flow 10-80 lpm

TYPE	RPM	POWER Kw	Fan dia mm	dB (A)	Q air (m3/h)	Capacity (Ltr)	Weight (kg)	IP Rating
12 DC	3100	0.1	190	68	1300	0.9	10	67
24 DC	3100	0.1	190	68	1300	0.9	10	67

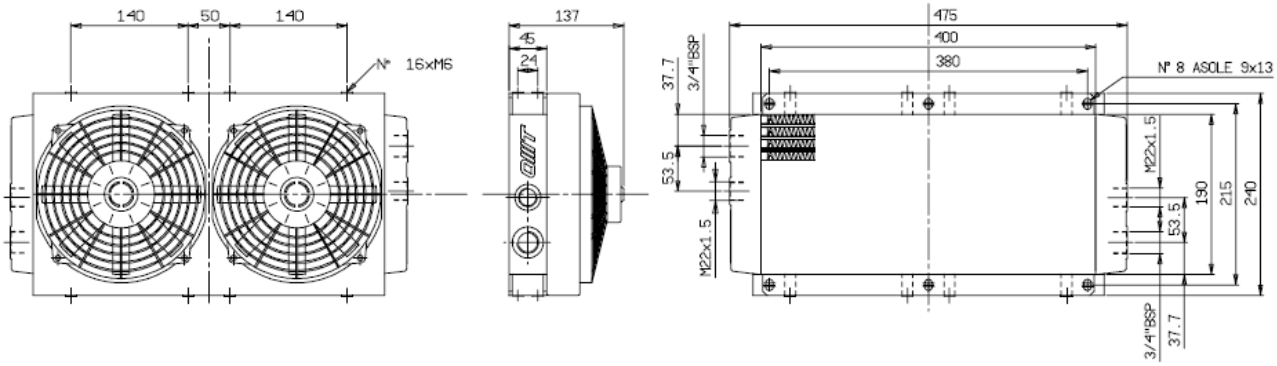

CORRECTION FACTOR

CST	10	15	20	32	40	50	60	80	100	200
F	0.51	0.66	0.76	1	1.22	1.4	1.6	1.9	2.1	3.4

DIAGRAMMA PERDITE DI CARICO (32 cst)
PRESSURE DROP DIAGRAM (32 cst)

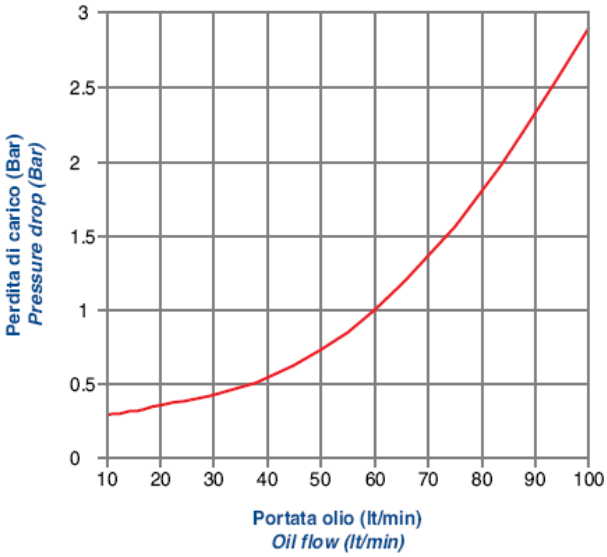

PERFORMANCE DIAGRAM

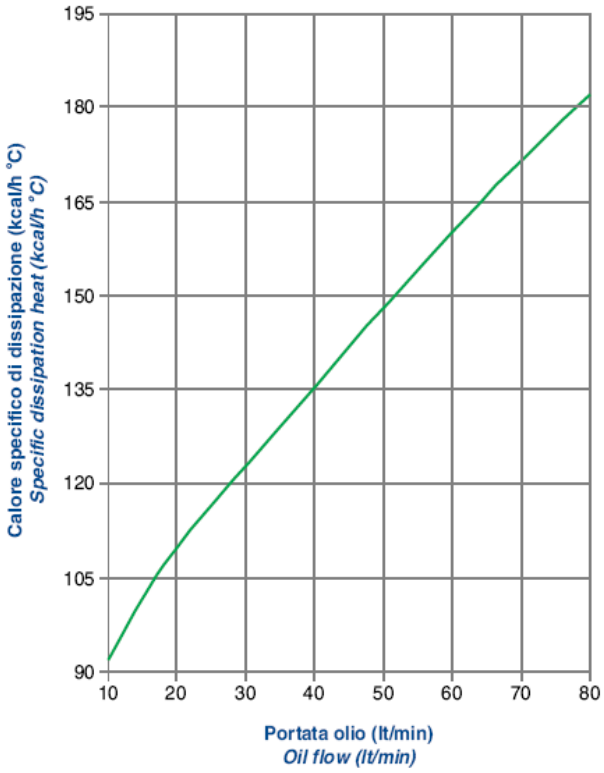

TEL 0118 976 1616 FAX 0118 976 1626

back to content page

HEAT EXCHANGERS

Bi Metallic Fixed Temperature Switch

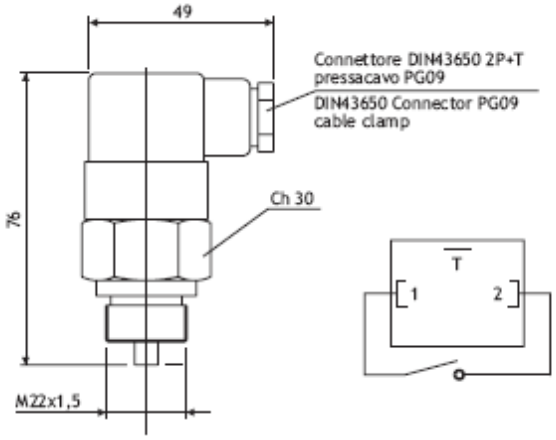

Dati elettrici / Electrical data

Tensione max. / Max. voltage	250Vca
Corrente max. / Max. current	16A
Tolleranza intervento / Tolerance	±5°C
Differenziale fisso max. / Fixed hysteresis max.	15°C
Connessione elettrica / Electrical connection	DIN43650
Protezione elettrica / Protection degree	IP65
Temperatura max. / Max temperature	130°C

Switch Part Number	Working Temperature	Contact NA=Normally open NO=Normally closed
T01-M22 x 1.5	36-26	NA / NC
T02-M22 x 1.5	42-33	NA / NC
T03-M22 x 1.5	52-42	NA / NC
T04-M22 x 1.5	65-55	NA / NC
T05-M22 x 1.5	75-65	NA / NC
T06-M22 x 1.5	85-75	NA / NC
T07-M22 x 1.5	95-85	NA / NC

Foot Mounting Flanges

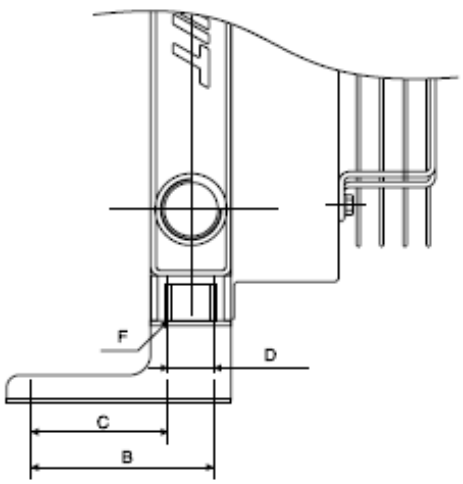

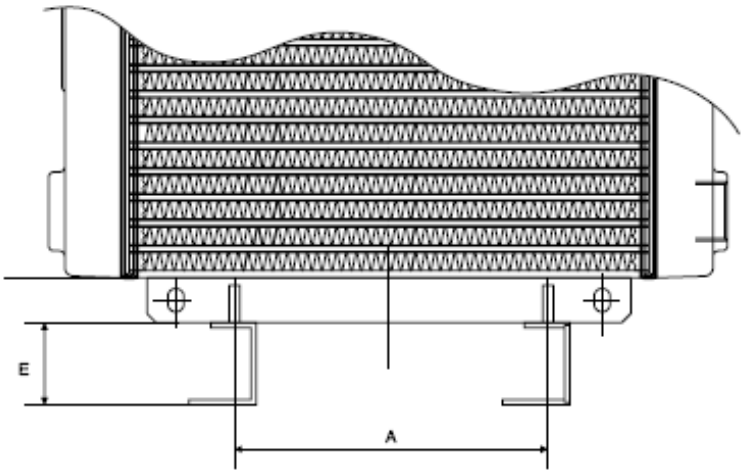

TYPE	FOOT FLANGES	A	B	C	D	E	F
ST50	P-SSA50-VN	140	125	101	24	45	M6
ST60	P-SSA50-VN	190	125	101	24	45	M6
ST100	P-SSA100-VN	190	127	91	36	50	M6
ST150	P-SSA100-VN	250	127	91	36	50	M8
ST180	P-SSA100-VN	370	127	91	36	50	M8
ST210	P-SSA210-VN	370	144	78	66	50	M8
STD50	P-SSA50-VN		125	101	24	45	M8

TEL 0118 976 1616 FAX 0118 976 1626

back to content page

Hose Reels

HOSE REELS FOR ALL APPLICATIONS

Various Pressures, Mountings, with or without Hose,

Enclosed or Open Reels....

Applications Including :-

Single and Twin Hydraulic
Stainless Steel
Powerwash
Garden
Air & Pneumatic
Grease
Welding
etc, etc

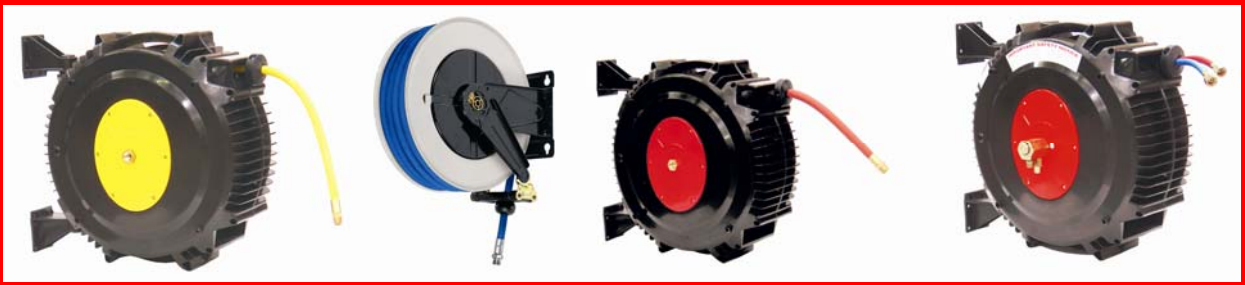

back to content page

Hycon Limited

The complete hydraulic Solution…

Hycon Limited
Unit K, Bridge Farm
Reading Road, Arborfield
Reading, Berkshire.
RG2 9HT

Tel : 0118 976 1616 Fax : 0118 976 1626

email : hydrauliccontrol@aol.com www.hycon.co.uk

TEL 0118 976 1616 FAX 0118 976 1626

Although every effort has been made to ensure that the information in this catalogue is correct ; the specifications, dimensions, List prices and Characteristics of all products are indicative only. We reserve the right to modify without notice the specifications, list prices of any products featured in this catalogue. All rights reserved.
No part of this catalogue whatsoever may be reproduced in any form or by any means without the prior written notice of the producer Hycon Limited. All transactions are subject to our standard Terms and conditions of Sale a copy of which is available upon request. Products shown in the catalogue are preferentially supplied but we reserve the right to supply an equivalent product or different manufactured item if stock on the original catalogue item is unavailable.

back to content page