Doors	Cutout Dimensions	
	A	B
TEAD18-B	16.25	19
TEAD30-B	28.25	19.375
TEAD36-B	34.25	19
TEAD42-B	40.25	19.375

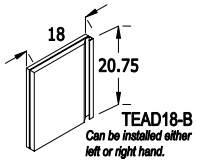

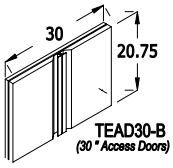

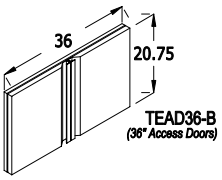

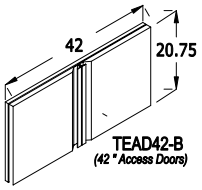

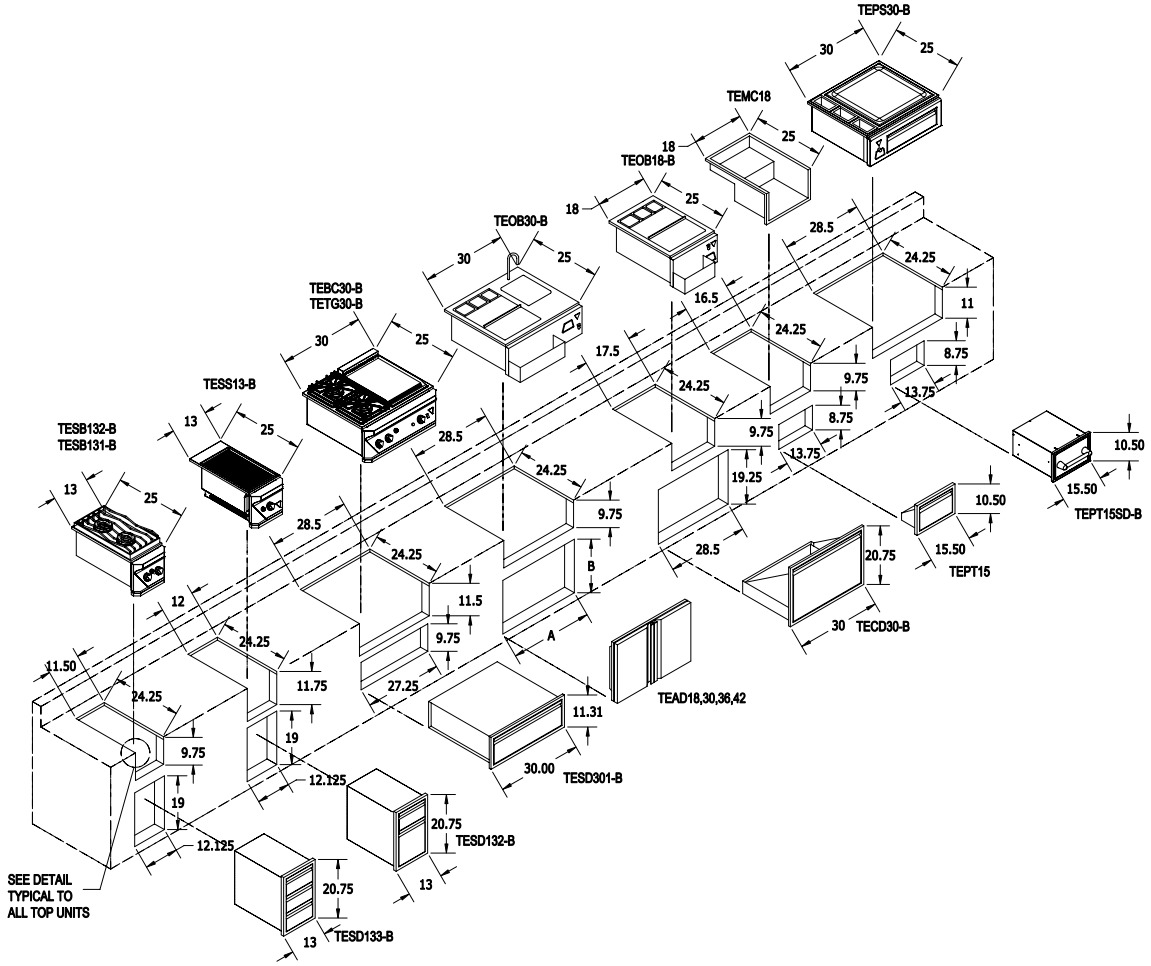

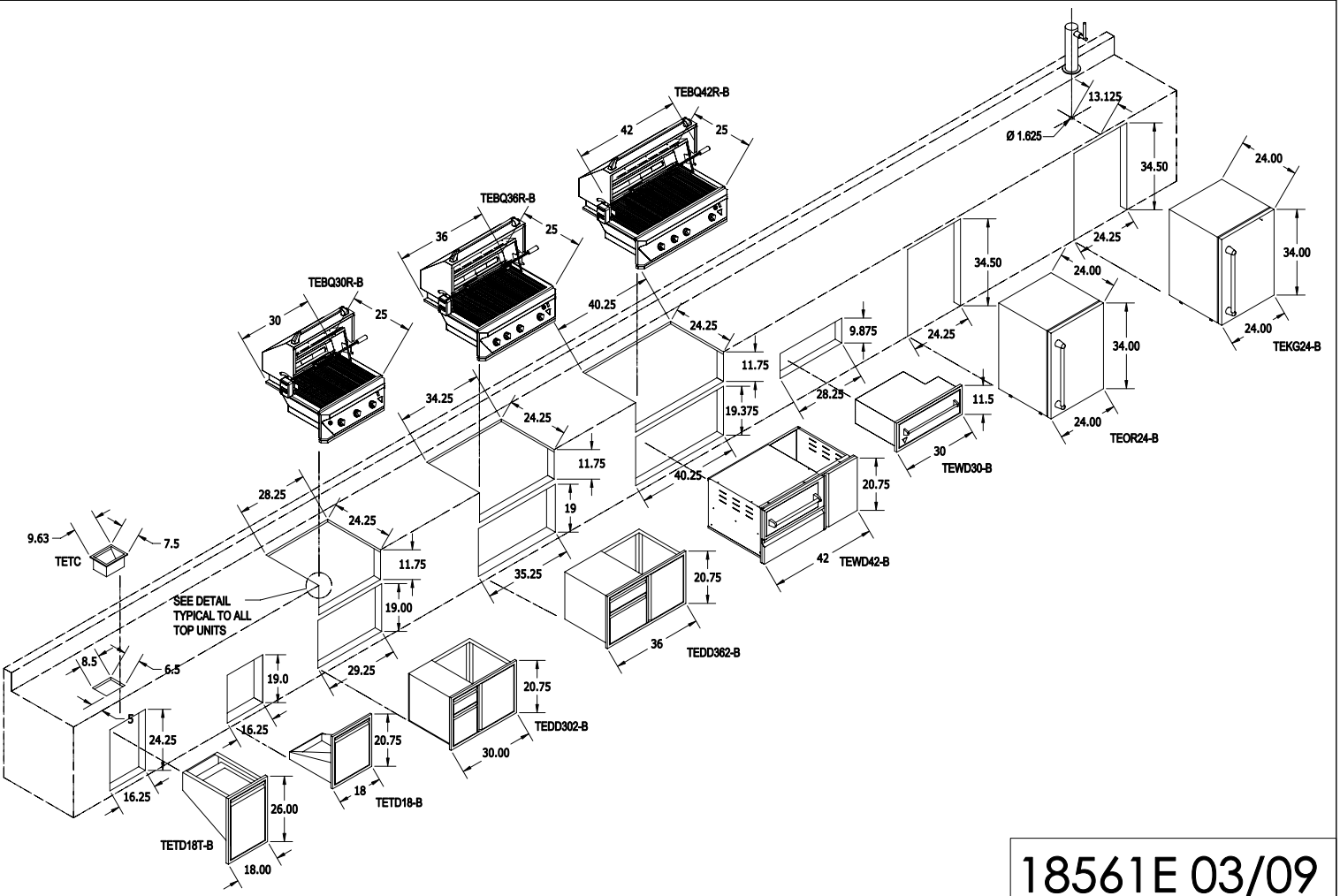

18561E 03/09