DWG NO D98434-071M REV D

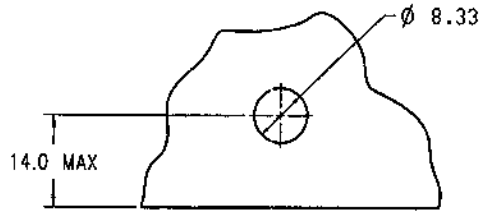

3.8/1.8 PANEL
SCALE 2:1

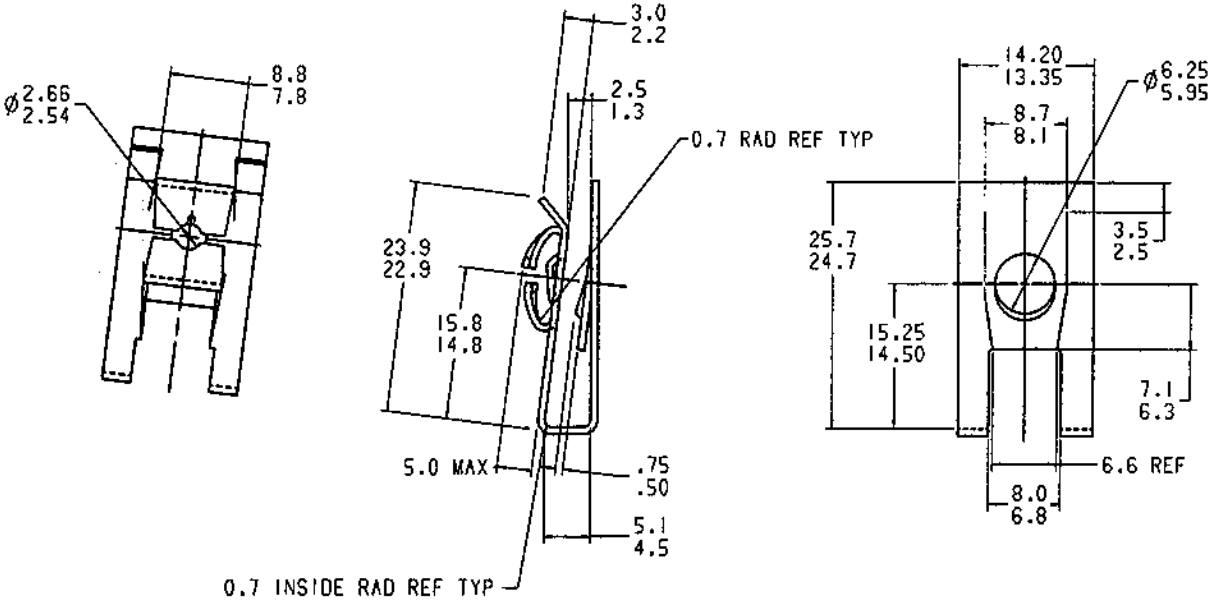

NOTE: 1) THE NUT MUST FLEX TO ALLOW THE SURFACE CARRYING THE HELIX IMPRESSION TO LAY FLAT AT ASSEMBLED PANEL, WHEN 1.35Nm OF TORQUE APPLIED
2) 0.5 Nm MAX. FIRST ON TORQUE.

NOTE: "D" IDENTIFICATION TO APPEAR ON FACE OF PART.

REVISIONS

E.C.O	REV	DESCRIPTION	DATE	DR	CK	APP
1966	D	REDRAWN ON CAD	11/21/96	RG	RR	[illegible]
		REDRAWN ON NEW BORDER				

NONCONTROLLED COPY

TINNERMAN PALNUT
ENGINEERED PRODUCTS, LLC

DRAWN BY	DATE	CHECKED	SCALE	APPROVED
S. SZOKE	11/22/84	E.C.R RELEASED 12/04/91	2:1	H. RATTMANN TSL PROD. 12/06/91

REF

MATERIAL	THICKNESS	HEAT TREAT	FINISH HARDNESS
SAE 1050-1065	0.71	AUSTEMPER	Rc45-50

NAME	PRODUCT CODE
U TYPE SPEED NUT	735

SPECIAL FEATURES: M 4.2 X 1.41 (8AB & 8B) TAPPING SCREW PREV. TORQUE

SHEET 1 OF 1	DWG NO D98434-071M	SIZE B