DWG NO D99214-064M REV

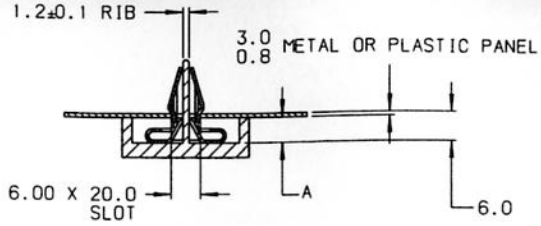

A=6.0-PANEL THICKNESS
6.0MM OFFSET REQUIRED FOR
PROPER CLIP ENGAGEMENT
TYPICAL ASSEMBLY
SCALE 1:1

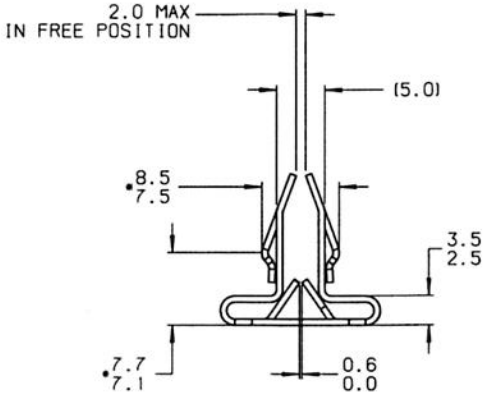

NOTE: "•" DIMENSION MEASURED
WHEN 2.0 MAX DIMENSION
IS HELD AT 1.2

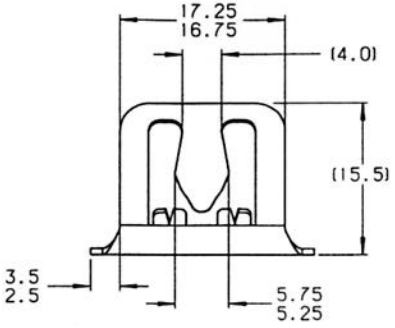

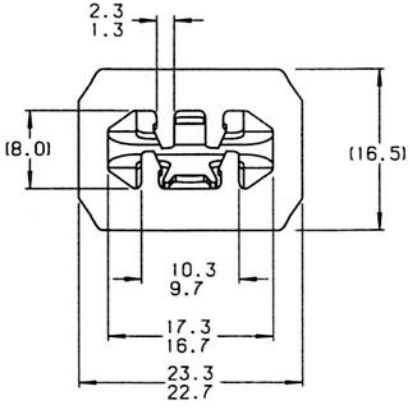

ACTUAL SIZE

NOTE: "T" IDENTIFICATION TO APPEAR
ON FACE OF PART.
DIMENSIONING AND TOLERANCING
PER ASME Y14.5M.

TARGET PERFORMANCE IN STEEL PANEL	
INSERTION	10 LBS MAX
RETENTION	20 LBS MIN

REVISIONS

E.C.O.	REV	DESCRIPTION	DATE	DR	CK	APP

CONTROLLED
IF RED

NOTICE TO PERSONS RECEIVING THIS DRAWING AND/OR TECHNICAL INFORMATION.
TINNERMAN PALNUT ENGINEERED PRODUCTS CLAIMS PROPRIETARY RIGHTS TO THE MATERIAL DISCLOSED HEREON. THIS DRAWING AND/OR TECHNICAL INFORMATION IS ISSUED IN CONFIDENCE FOR ENGINEERING INFORMATION ONLY AND MAY NOT BE REPRODUCED OR USED TO MANUFACTURE ANYTHING SHOWN OR REFERRED TO HEREON WITHOUT DIRECT WRITTEN PERMISSION FROM TINNERMAN PALNUT ENGINEERED PRODUCTS. THIS DRAWING AND/OR TECHNICAL INFORMATION IS THE PROPERTY OF TINNERMAN PALNUT ENGINEERED PRODUCTS AND IS LOANED FOR MUTUAL ASSISTANCE.

MARK TOOL:

TINNERMAN PALNUT
ENGINEERED PRODUCTS (CANADA) CORPORATION
P.O. Box 2492
Hamilton, Ontario, Canada
L8N 3K1

DRAWN BY	DATE	CHECKED	SCALE	APPROVED
M. LUANG-ASA	03/03/05	Doug Holdink RELEASED 3-15-2005	2:1	1ST. PROD. 03-15-05

REF: DX8286-064M CONCEPT DRAWING REV C

MATERIAL	THICKNESS	HEAT TREAT	FINISH HARDNESS
SAE 1050-1065	0.64	AUSTEMPER	Rc44-51

NAME TRIM CLIP

SPECIAL FEATURES:

SHEET: 1
OF: 1

DWG NO D99214-064M

SIZE B

REVISED, MAY 31, 2004