DWG NO D99008-064M REV B

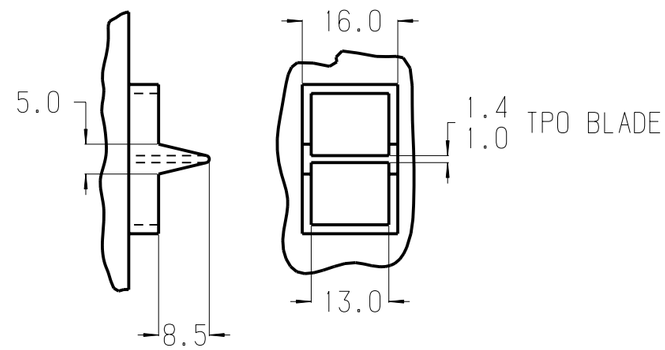

SCALE 1:1

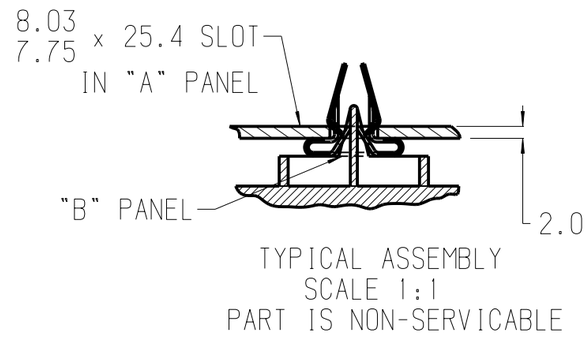

TYPICAL ASSEMBLY
SCALE 1:1
PART IS NON-SERVICABLE

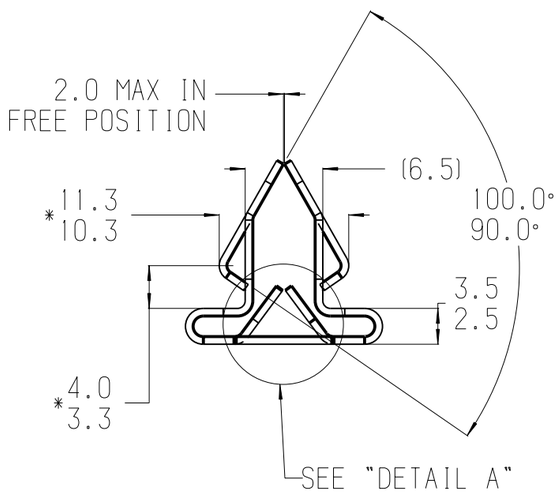

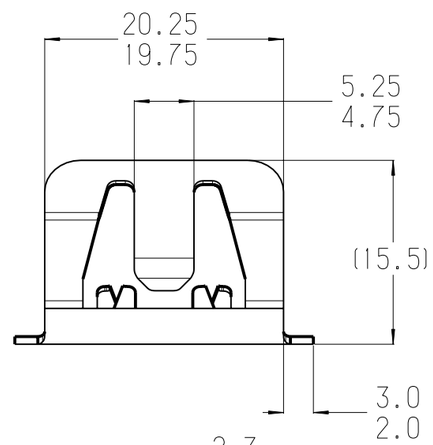

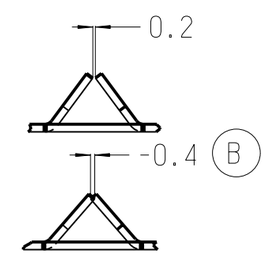

DETAIL A

NOTE: "*" DIMENSION MEASURED WHEN 2.0 MAX DIMENSION IS HELD AT ZERO

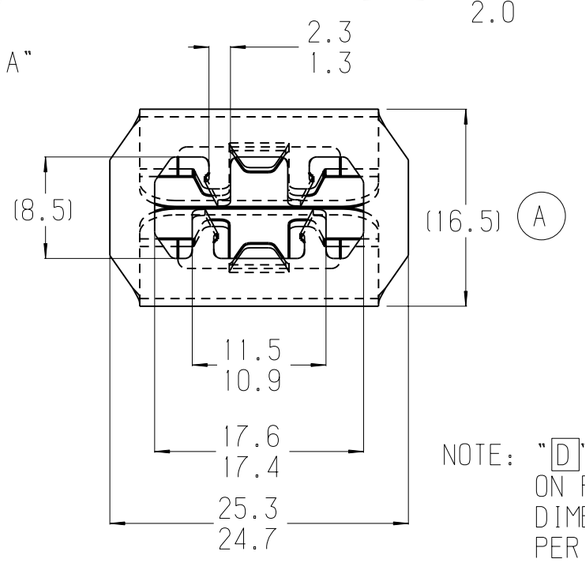

ACTUAL SIZE

NOTE: "D" IDENTIFICATION TO APPEAR ON FACE OF PART.
DIMENSIONING AND TOLERANCING PER ASME Y14.5M.

REVISIONS

E.C.O	REV	DESCRIPTION	DATE	DR	CK	APP
2963	A	(16.5) ADDED	02/06/02	MV	RR	HR
		REDRAWN ON NEW BORDER				
	B	-0.4 WAS 1.3	07/15/02	MV		

MARK TOOL:

TINNERMAN PALNUT
ENGINEERED PRODUCTS (CANADA) CORPORATION

P.O. Box 2492
Hamilton, Ontario, Canada
L8N 3K1

DRAWN BY	DATE	CHECKED	SCALE	APPROVED
D.BUDNITSKY	11/28/01	R.RANKIN RELEASED 11/29/01	2:1	H.RATTMANN 1ST. PROD. 11/30/01

REF:

MATERIAL	THICKNESS	HEAT TREAT	FINISH HARDNESS
SAE 1050-1065	0.64	AUSTEMPER	Rc44-51

NAME: TRIM CLIP

PRODUCT CODE #: 930

SPECIAL FEATURES:

SHEET: 1
OF: 1

DWG NO D99008-064M

SIZE B

REVISED: JANUARY 18. 2002