DWG NO D98992-064M REV B

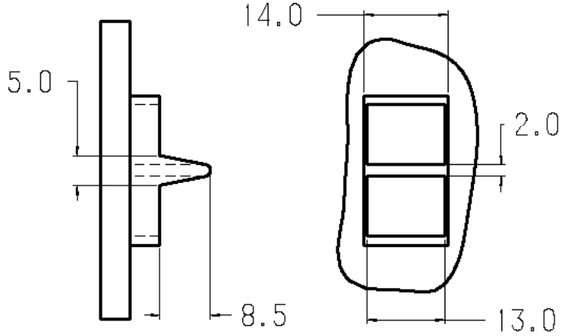

SCALE 1:1

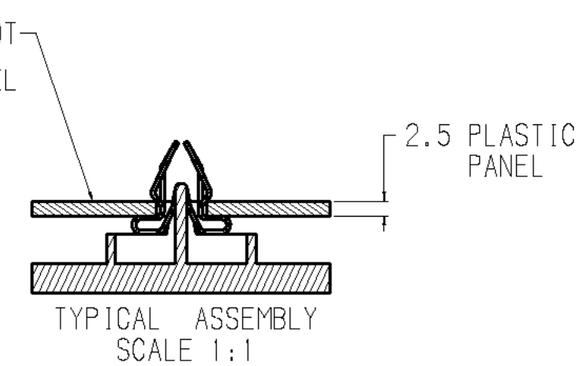

TYPICAL ASSEMBLY
SCALE 1:1

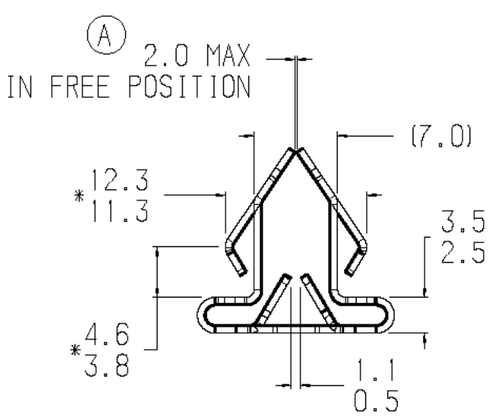

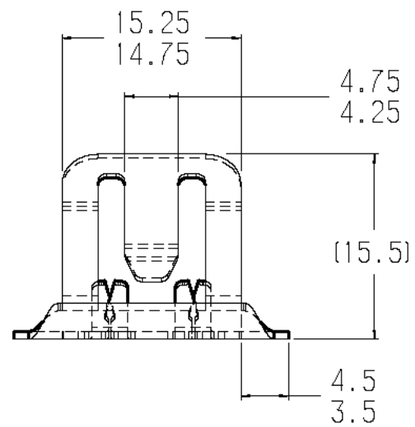

NOTE: "*" DIMENSION MEASURED WHEN 2.0 MAX DIMENSION IS HELD AT ZERO.

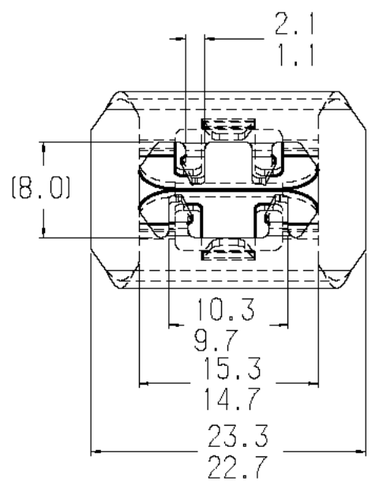

NOTE: "D" IDENTIFICATION TO APPEAR ON FACE OF PART. DIMENSIONING AND TOLERANCING PER ASME Y14.5M.

ACTUAL SIZE

B

PERFOMANCE SPECIFICATIONS IN STEEL PANEL "A" Rc50-56	
MAX. INSTALLATION FORCE IN 8.25 SLOT	80 N
MIN. REMOVAL FORCE IN 8.75 SLOT	89 N

REVISIONS

E.C.O	REV	DESCRIPTION	DATE	DR	CK	APP
2849	A	2.0 MAX IN FREE POSITION	6/27/01	ML	RR	HR
		WAS 2.0 MAX				
2886	B	PERFORMANCE SPECS ADDED	9/4/01	ML		

MARK TOOL:

TINNERMAN PALNUT
ENGINEERED PRODUCTS (CANADA) CORPORATION

P.O. Box 2492
Hamilton, Ontario, Canada
L8N 3K1

DRAWN BY	DATE	CHECKED	SCALE	APPROVED
M.LUANG-ASA	06/08/01	D. HOLODNUIK RELEASED 6/20/01	2:1	H. RATTMANN 1ST. PROD. 6/20/01

REF:

MATERIAL	THICKNESS	HEAT TREAT	FINISH HARDNESS
SAE 1050-1065	0.64	AUSTEMPER	Rc44-51

NAME	PRODUCT CODE #
TRIM CLIP	930

SPECIAL FEATURES:

SHEET: 1 OF: 1	DWG NO D98992-064M	SIZE B

F:\users\archives\pro\pro formats\transtech b.frm