DWG NO D98988-064M REV C

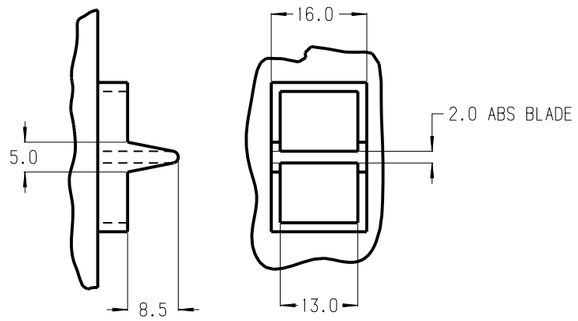

SCALE 1:1

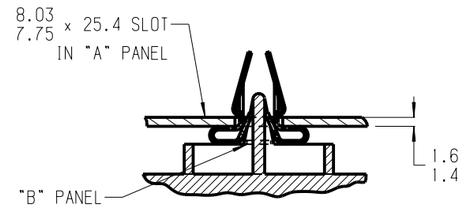

TYPICAL ASSEMBLY
SCALE 1:1

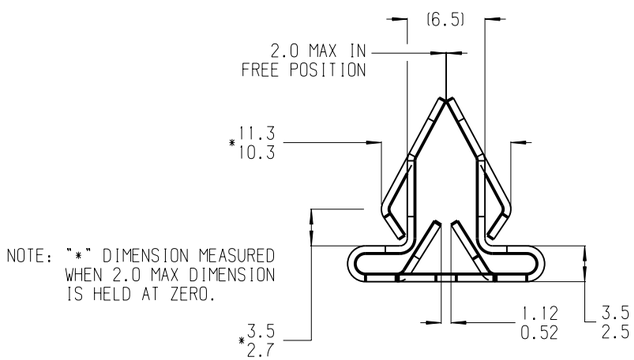

NOTE: "*" DIMENSION MEASURED WHEN 2.0 MAX DIMENSION IS HELD AT ZERO.

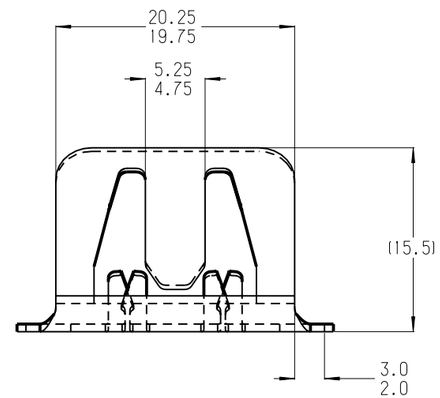

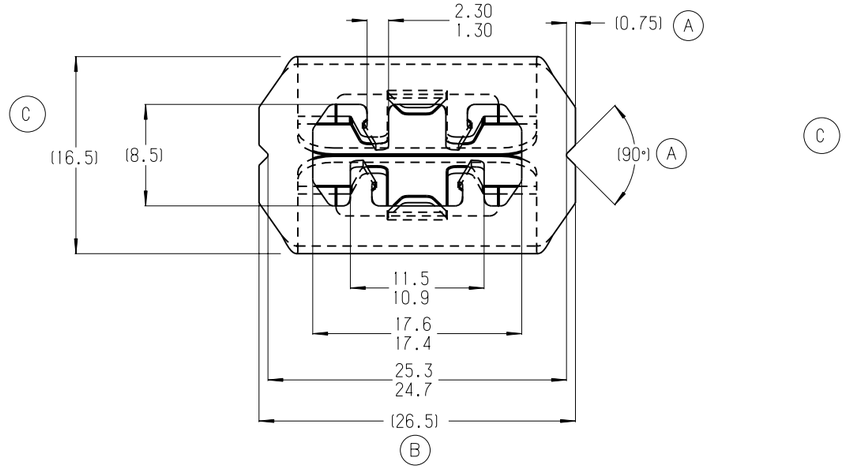

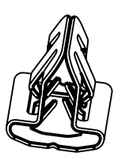

ACTUAL SIZE

NOTE: "D" IDENTIFICATION TO APPEAR ON FACE OF PART.
DIMENSIONING AND TOLERANCING PER ASME Y14.5M.

PERFOMANCE SPECIFICATIONS IN STEEL PANEL "A" Rc50-56	
MAX. INSTALLATION FORCE IN 7.75 SLOT	89 N
MIN. REMOVAL FORCE IN 8.03 SLOT	89 N

REVISIONS

E.C.O	REV	DESCRIPTION	DATE	DR	CK	APP
2847	A	(0.75) ADDED	06/26/01	DB	DH	HR
		(90°) ADDED				
2894	B	(26.5) ADDED	09/12/01	DB	DH	HR
2960	C	(16.5) ADDED	02/06/02	MV		
		REDRAWN ON NEW BORDER				

MARK TOOL:

TINNERMAN PALNUT
ENGINEERED PRODUCTS (CANADA) CORPORATION

P.O. Box 2492
Hamilton, Ontario, Canada
L8N 3K1

DRAWN BY	DATE	CHECKED	SCALE	APPROVED
R.GUARASCIA	05/01/01	R.RANKIN RELEASED 05/11/01	2:1	H.RATTMANN 1ST. PROD. 05/11/01

REF:

MATERIAL	THICKNESS	HEAT TREAT	FINISH HARDNESS
SAE 1050-1065	0.64	AUSTEMPER	Rc44-51

NAME	PRODUCT CODE #
TRIM CLIP	930

SPECIAL FEATURES:

SHEET: 1 OF: 1	DWG NO D98988-064M	SIZE B

REVISED: JANUARY 18, 2002