DWG NO D98976-064M REV A

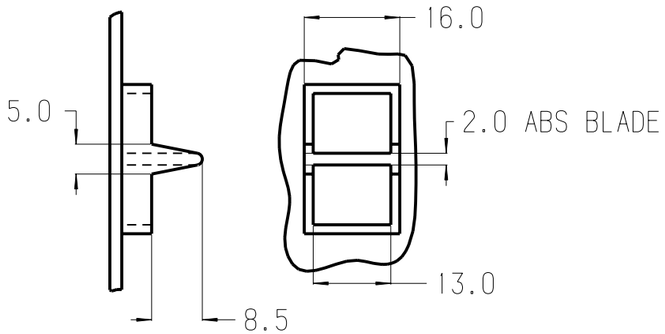

SCALE 1:1

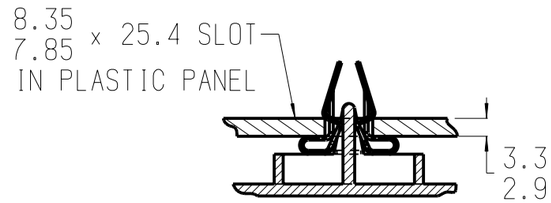

TYPICAL ASSEMBLY
SCALE 1:1

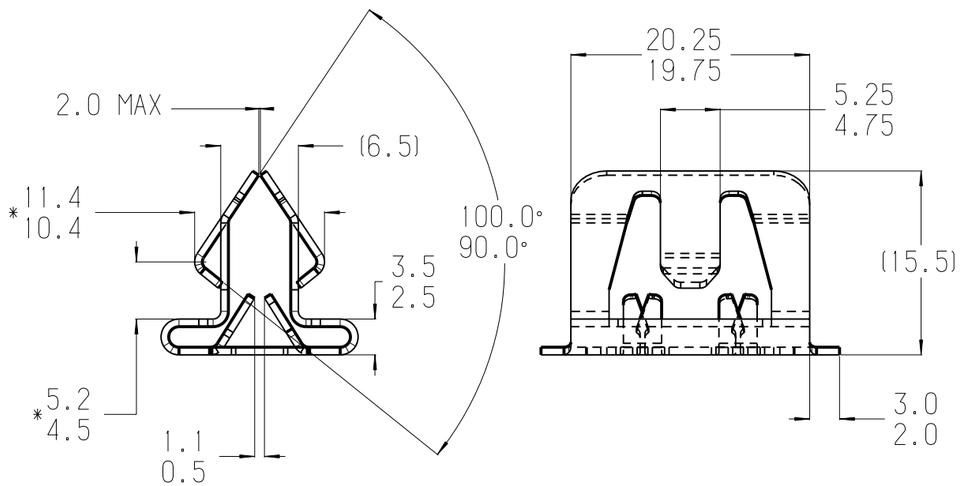

NOTE: "*" DIMENSION MEASURED WHEN 2.0 MAX DIMENSION IS HELD AT ZERO.

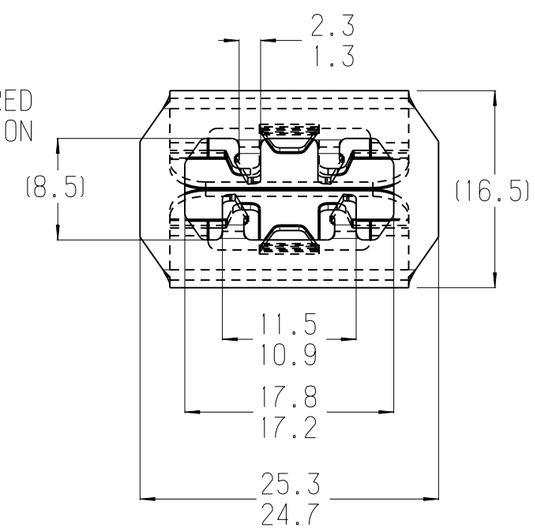

ACTUAL SIZE

NOTE: "U" IDENTIFICATION TO APPEAR ON FACE OF PART.
DIMENSIONING AND TOLERANCING PER ASME Y14.5M.

PERFORMANCE SPECIFICATIONS IN STEEL PANEL "A" Rc50-56	
MAX. INSTALLATION FORCE IN 7.85 SLOT	89 N
MIN. REMOVAL FORCE IN 8.35 SLOT	112 N

REVISIONS

E.C.O	REV	DESCRIPTION	DATE	DR	CK	APP
2959	A	(16.5) ADDED	02/06/02	MV		
		REDRAWN ON NEW BORDER				

MARK TOOL:

TINNERMAN PALNUT
ENGINEERED PRODUCTS (CANADA) CORPORATION

P.O. Box 2492
Hamilton, Ontario, Canada
L8N 3K1

DRAWN BY	DATE	CHECKED	SCALE	APPROVED
R. GUARASCIA	11/28/00	R.RANKIN RELEASED 11/29/00	2:1	H.RATTMANN 1ST. PROD. 11/29/00

REF:

MATERIAL	THICKNESS	HEAT TREAT	FINISH HARDNESS
SAE 1050-1065	0.64	AUSTEMPER	Rc44-51

NAME: TRIM CLIP

PRODUCT CODE #: 930

SPECIAL FEATURES:

SHEET: 1 OF: 1

DWG NO D98976-064M

SIZE B

REVISED: JANUARY 18. 2002