DWG NO D98777-051M REV

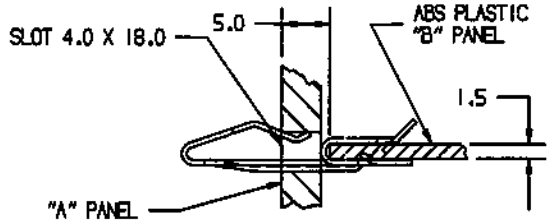

TYPICAL ASSEMBLY
SCALE 2:1

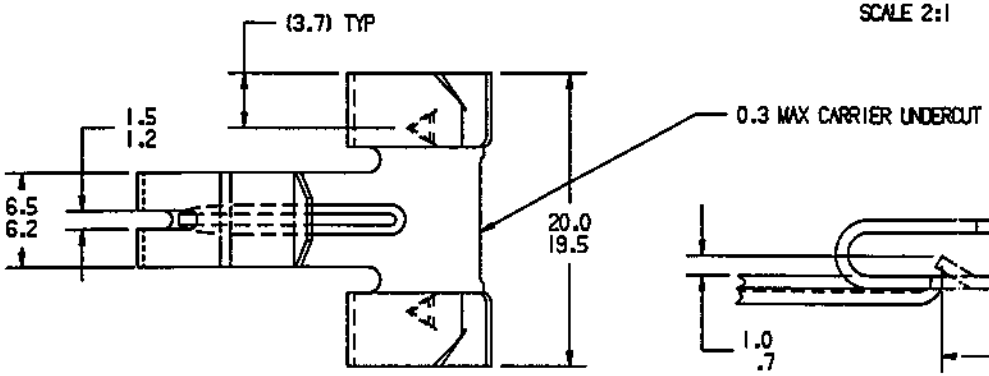

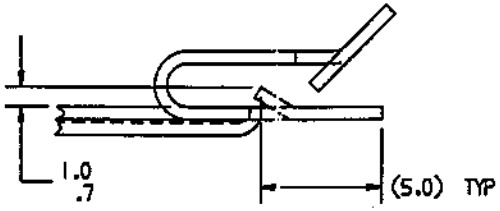

SCALE 5:1

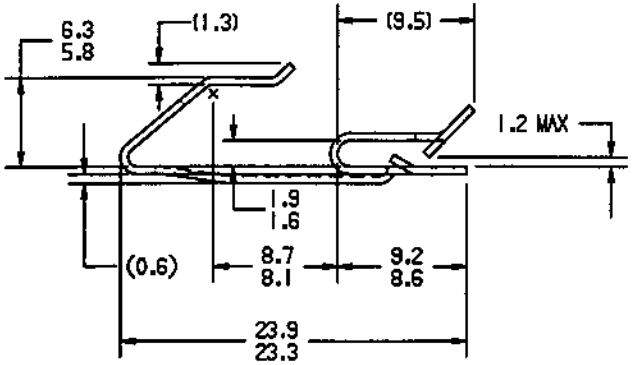

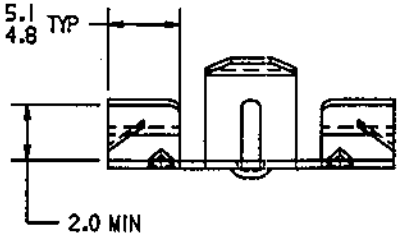

ACTUAL SIZE

NOTE: "◇" IDENTIFICATION TO APPEAR ON FACE OF PART.
DIMENSIONING AND TOLERANCING PER ANSI Y14.5M.

REVISIONS

E.C.O	REV	DESCRIPTION	DATE	DR	CK	APP

NONCONTROLLED COPY

TINNERMAN PALNUT
ENGINEERED PRODUCTS, LLC

DRAWN BY	DATE	CHECKED	SCALE	APPROVED
M. BASCHIERA	12/02/94	RELEASED 12-16-94	3:1	1ST. PROD. 12-16-94

REF

MATERIAL	THICKNESS	HEAT TREAT	FINISH HARDNESS
SAE 1050-1065	0.51	AUSTEMPER	Rc44-51

NAME: TRIM CLIP

PRODUCT CODE #: 930

SPECIAL FEATURES:

SHEET 1 OF 1 | DWG NO D98777-051M | SIZE B