DWG NO D98858-056M REV A

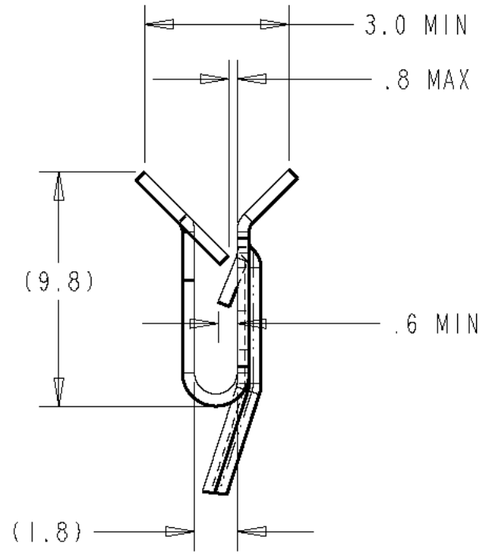

DETAIL "A"
SCALE 4:1

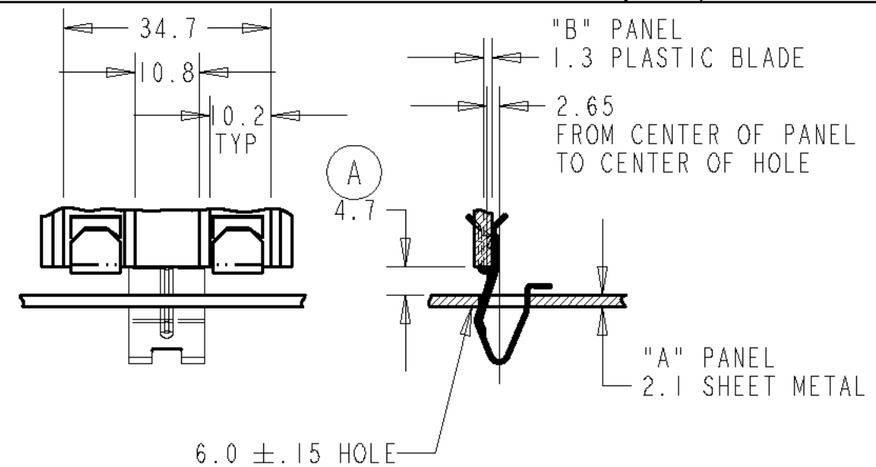

TYPICAL ASSEMBLY
SCALE 1:1

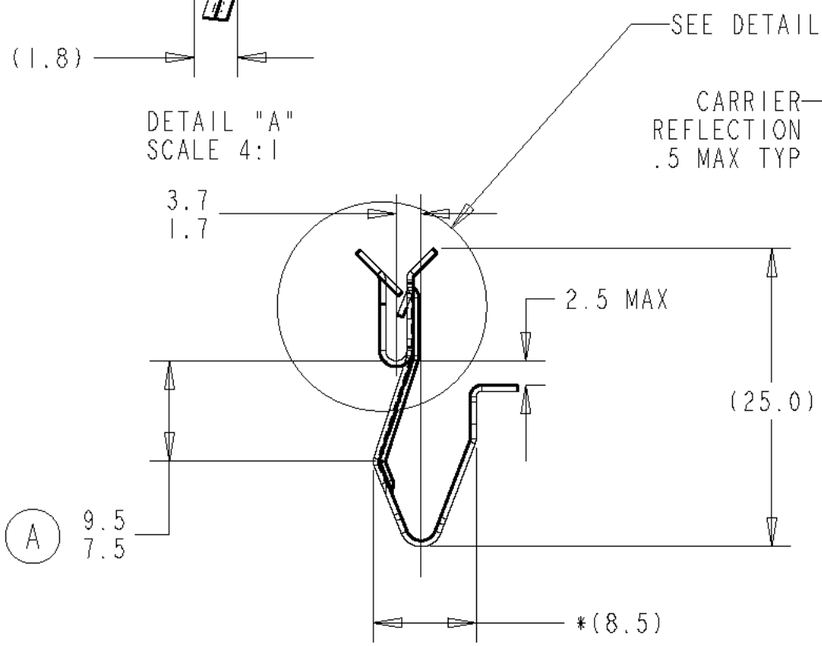

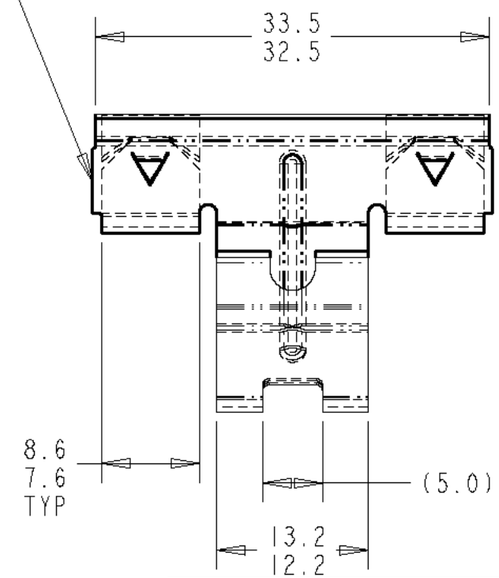

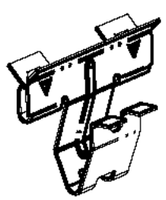

ACTUAL SIZE

NOTE: * DIMENSIONS TO BE SUPERSEDED BY E.S. TESTING

NOTE: "D" IDENTIFICATION TO APPEAR ON FACE OF PART. DIMENSIONING AND TOLERANCING PER ASME Y14.5M

PERFORMANCE SPECS		
MATING PART	INSERTION NEWTONS	RETENTION NEWTONS
"A" PANEL	120N MAX (A)	50N MIN (A)
RETENTION TO PNL "B" TO BE GREATER THAN PNL "A"		

REVISIONS

E.C.O	REV	DESCRIPTION	DATE	DR	CK	APP
2783	A	9.5/7.5 WAS 7.5/5.5	03/12/01	PS		
		4.7 WAS 2.7				
		REDRAWN ON NEW BORDER				
		120N MAX WAS 110N MAX				
		50N MIN WAS 55N MIN				

MARK TOOL:

TINNERMAN PALNUT
ENGINEERED PRODUCTS (CANADA) CORPORATION

P.O. Box 2492
Hamilton, Ontario, Canada
L8N 3K1

DRAWN BY	DATE	CHECKED	SCALE	APPROVED
P. SELVEY	5-13-99	T. MULDOON RELEASED 5-13-99	2:1	H. RATTMANN 1ST. PROD. 5-13-99

REF:

MATERIAL	THICKNESS	HEAT TREAT	FINISH HARDNESS
SAE 1050-1065	0.56	AUSTEMPER	Rc44-51

NAME	PRODUCT CODE #
TRIM CLIP	930

SPECIAL FEATURES:

SHEET: 1 OF: 1	DWG NO D98858-056M	SIZE B