DWG NO D98826-051M REV B

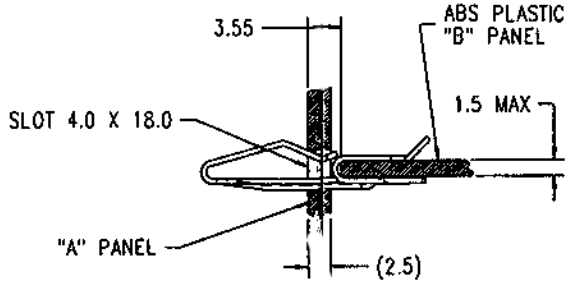

TYPICAL ASSEMBLY
SCALE 2:1

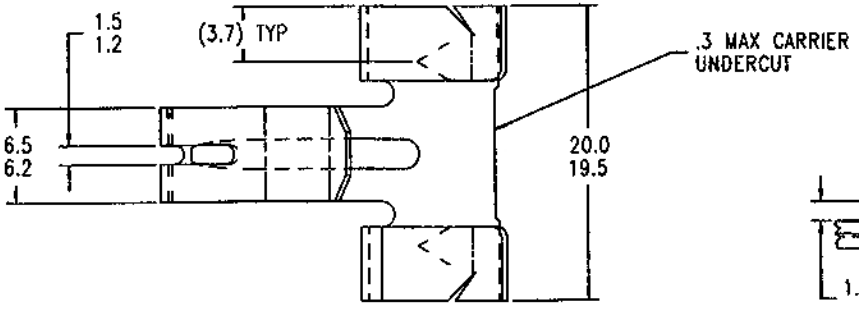

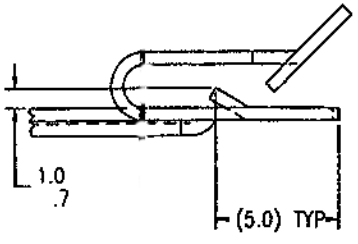

DETAIL "A"
SCALE 5:1

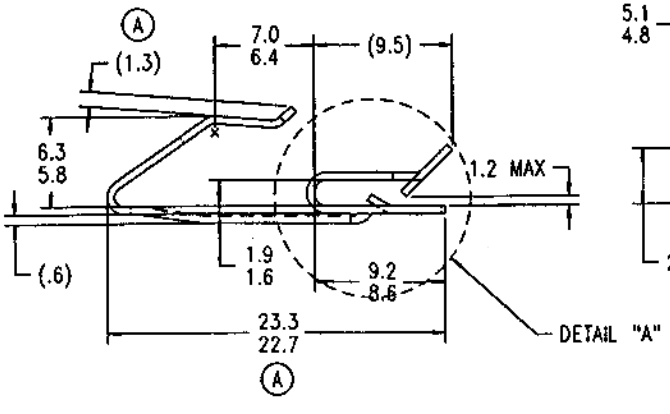

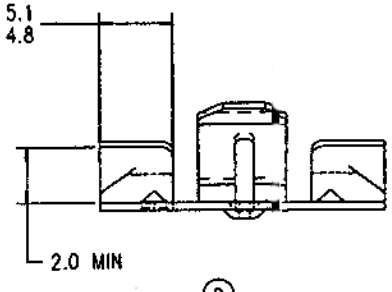

NOTE: "D" IDENTIFICATION TO APPEAR ON FACE OF PART. DIMENSIONING AND TOLERANCING PER ANSI Y14.5M.

REVISIONS

E.C.O	REV	DESCRIPTION	DATE	DR	CK	APP
1875	A	PART CHANGED PICTORIALLY	03/22/96	PS	RR	HR
		(1.3) ADDED				
		23.3/22.7 WAS 23.9/23.3				
1879	B	IDENTIFICATION STAMP D WAS D	04/01/96	JP	RR	R

TINNERMAN PALNUT
ENGINEERED PRODUCTS, LLC

DRAWN BY	DATE	CHECKED	SCALE	APPROVED
P SELVEY	03/05/96	R Rankin RELEASED 3-8-96	3:1	H. Rattmann 1ST. PROD. 3-8-96

REF

MATERIAL	THICKNESS	HEAT TREAT	FINISH HARDNESS
SAE 1050-1065	.51	AUSTEMPER	Rc44-51

NAME	PRODUCT CODE #
TRIM CLIP	930

SPECIAL FEATURES:

SHEET 1 OF 1	DWG NO	SIZE
	D98826-051M	B