DWG NO D99302-064M REV

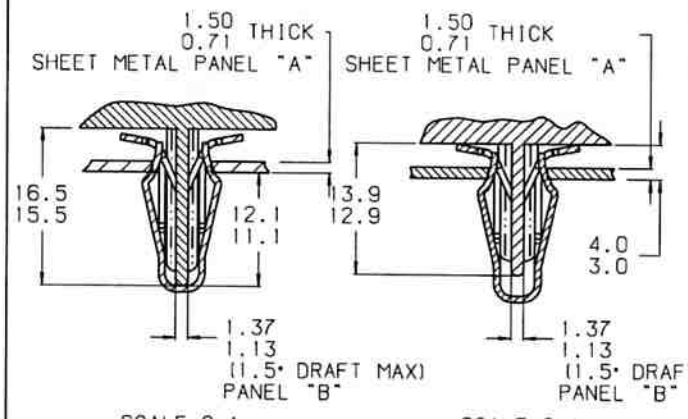


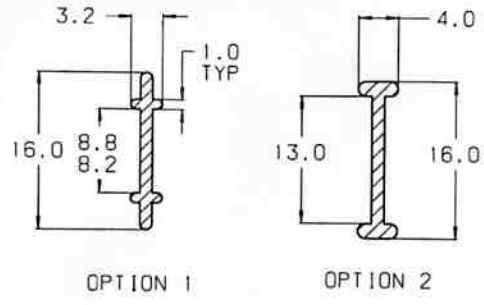


OPTIONAL RIB DESIGNS
SCALE 2:1

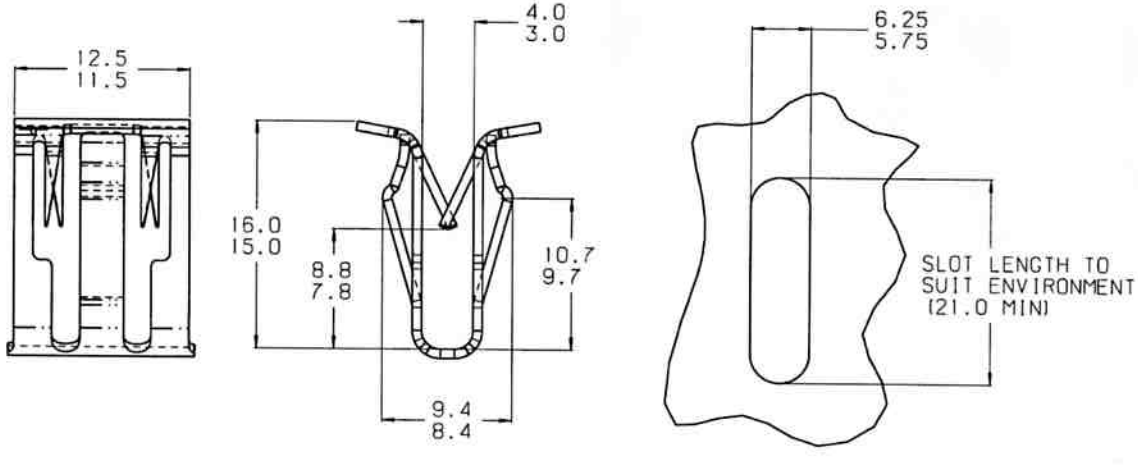


SCALE 2:1

ACTUAL SIZE

NOTE: MFG IDENTIFICATION TO APPEAR ON FACE OF PART.
DIMENSIONING AND TOLERANCING PER ASME Y14.5M.

MAX INSERTION IN PANEL A - 44.5 N (10 LBS)
MIN RETENTION IN PANEL A - 111.2 N (25 LBS) IN SLOT

REVISIONS

| E.C.O. | REV | DESCRIPTION | DATE | DR | CK | APP |
|---|---|---|---|---|---|---|
| | | | | | | |

CONTROLLED IF RED

NOTICE TO PERSONS RECEIVING THIS DRAWING AND/OR TECHNICAL INFORMATION:
TINNERMAN PALNUT ENGINEERED PRODUCTS CLAIMS PROPRIETARY RIGHTS TO THE MATERIAL DISCLOSED HEREON. THIS DRAWING AND/OR TECHNICAL INFORMATION IS ISSUED IN CONFIDENCE FOR ENGINEERING INFORMATION ONLY AND MAY NOT BE REPRODUCED OR USED TO MANUFACTURE ANYTHING SHOWN OR REFERRED TO HEREON WITHOUT DIRECT WRITTEN PERMISSION FROM TINNERMAN PALNUT ENGINEERED PRODUCTS. THIS DRAWING AND/OR TECHNICAL INFORMATION IS THE PROPERTY OF TINNERMAN PALNUT ENGINEERED PRODUCTS AND IS LOANED FOR MUTUAL ASSISTANCE.

MARK TOOL:

TINNERMAN PALNUT
ENGINEERED PRODUCTS (CANADA) CORPORATION
P.O. Box 2492
Hamilton, Ontario, Canada
L8N 3K1

| DRAWN BY | DATE | CHECKED | SCALE | APPROVED |
|---|---|---|---|---|
| P. SELVEY | 12/13/06 | Doug Hardie RELEASED 01-09-2007 | 3:1 | 1ST. PROD. |

REF: DX9813-064M. QUOTE #22380-009. TC061020. CM 11588783

| MATERIAL | THICKNESS | HEAT TREAT | FINISH HARDNESS |
|---|---|---|---|
| SAE 1050-1065 | .64 | AUSTEMPER | Rc 44-51 |

NAME TRIM CLIP

SPECIAL FEATURES:

SHEET: 1 OF: 1 | DWG NO D99302-064M | SIZE B

REVISED: MAY 31, 2004