DWG NO D99024-056M REV B

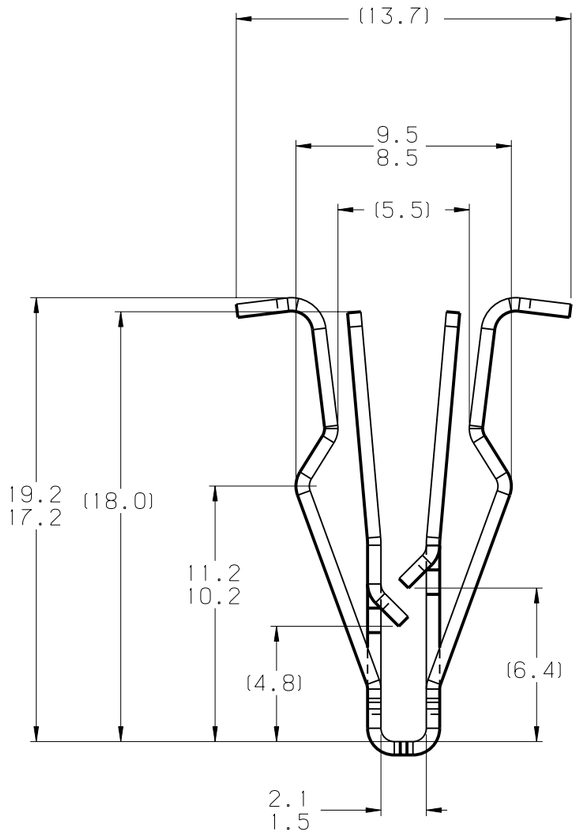

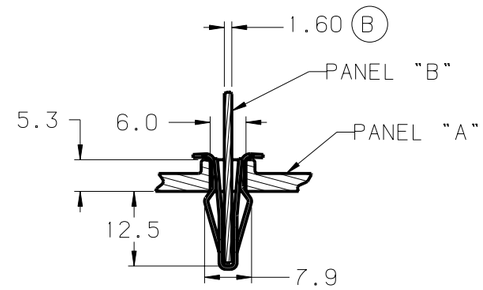

TYPICAL ASSEMBLY
SCALE 1:1

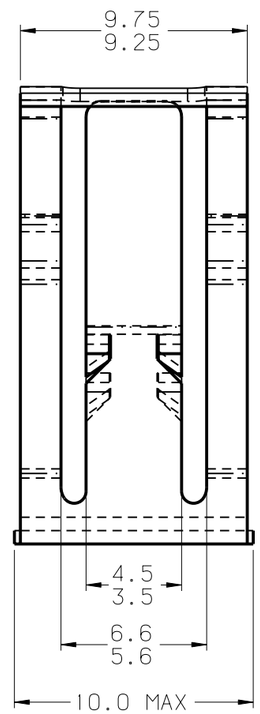

ACTUAL SIZE

NOTE: "D" IDENTIFICATION TO APPEAR ON FACE OF PART DIMENSIONING AND TOLERANCING PER ASME Y14.5M

(A)

PERFORMANCE SPECIFICATIONS WHEN TESTED USING A 1.60mm ABS BLADE AND A STEEL PANEL WITH A 6.0mm SLOT	
INSERTION INTO STEEL PANEL	50N MAX.
RETENTION FROM STEEL PANEL	63N MIN

REVISIONS

E.C.O	REV	DESCRIPTION	DATE	DR	CK	APP
3026	A	PERFORMANCE VALUES ADDED	06/26/02	RG	DH	HR
3033	B	1.60 WAS 1.25	07/10/02	RG		

MARK TOOL:

TINNERMAN PALNUT
ENGINEERED PRODUCTS (CANADA) CORPORATION

P.O. Box 2492
Hamilton, Ontario, Canada
L8N 3K1

DRAWN BY	DATE	CHECKED	SCALE	APPROVED
R. GUARASCIA	05/09/02	R. RANKIN RELEASED 05/17/02	4:1	H. RATTMANN 1ST. PROD. 05/21/02

REF:

MATERIAL	THICKNESS	HEAT TREAT	FINISH HARDNESS
SAE 1050-1065	0.56	AUSTEMPER	Rc44-51

NAME: TRIM CLIP

PRODUCT CODE #: 930

SPECIAL FEATURES:

SHEET: 1 OF: 2

DWG NO D99024-056M

SIZE B

REVISED: JANUARY 18, 2002