DWG NO D98974-043M REV

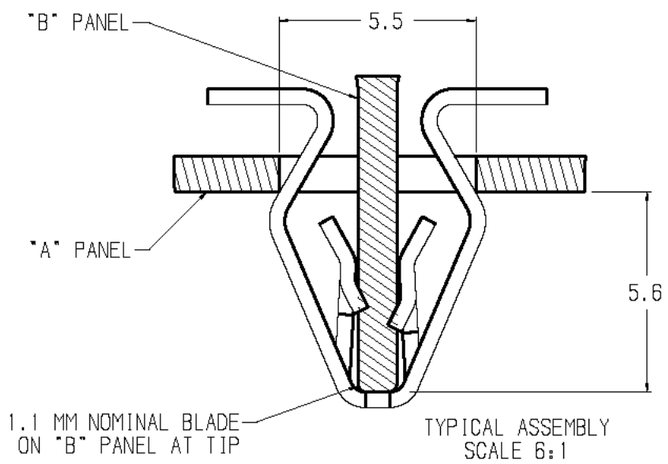

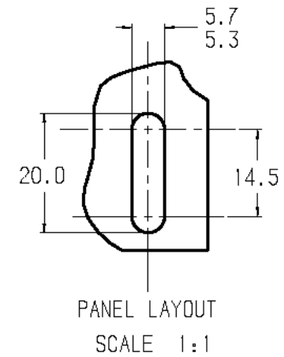

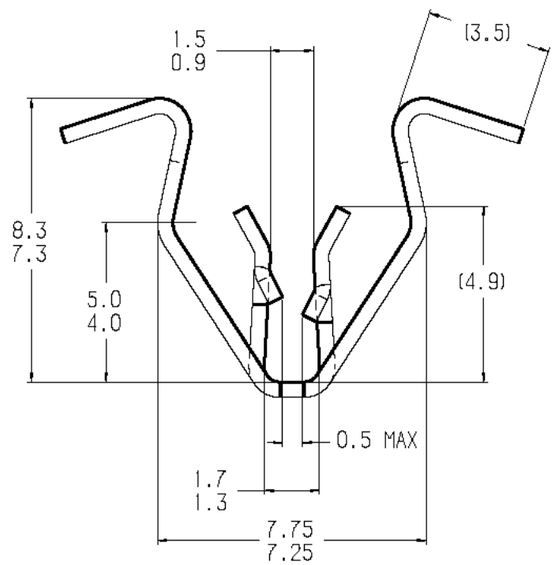

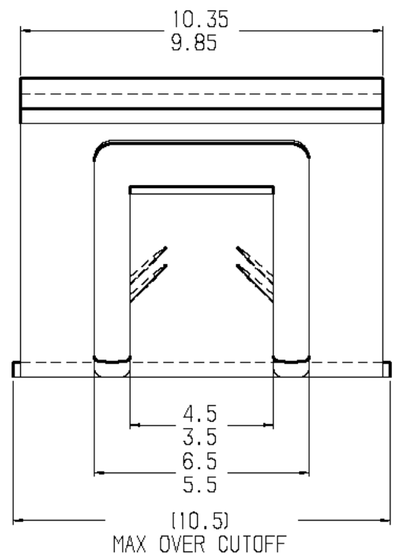

REVISIONS

E.C.O	REV	DESCRIPTION	DATE	DR	CK	APP

ACTUAL SIZE

NOTE: "D" IDENTIFICATION TO APPERAR
ON FACE OF PART.
DIMENSIONING AND TOLERANCING
PER ASME Y14.5M.

LOAD TO MATING PART
NOMINAL SLOT 5.5 WIDE
H.T. STEEL PANEL

MATING PART	INSERTION	RETENTION
A	140N MAX	55N MIN

RETENTION TO PANEL "B"
TO BE GREATER THAN
PANEL "A:

MARK TOOL:

TINNERMAN PALNUT
ENGINEERED PRODUCTS (CANADA) CORPORATION

P.O. Box 2492
Hamilton, Ontario, Canada
L8N 3K1

DRAWN BY	DATE	CHECKED	SCALE	APPROVED
M. LUANG-ASA	10/31/00	RELEASED	6:1	1ST. PROD.

REF:

MATERIAL	THICKNESS	HEAT TREAT	FINISH HARDNESS
SAE 1050-1065	0.43	AUSTEMPER	Rc44-51

NAME: TRIM CLIP

PRODUCT CODE #: 930

SPECIAL FEATURES:

SHEET: 1
OF: 1

DWG NO D98974-043M

SIZE B

F:\users\archives\pro\pro formats\transtech b.frm