DWG NO D98901-051M REV A

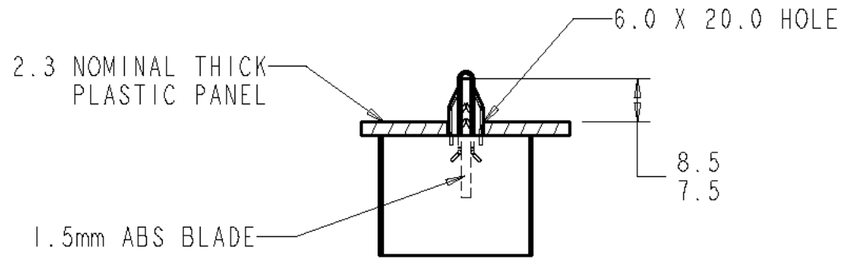

TYPICAL ASSEMBLY

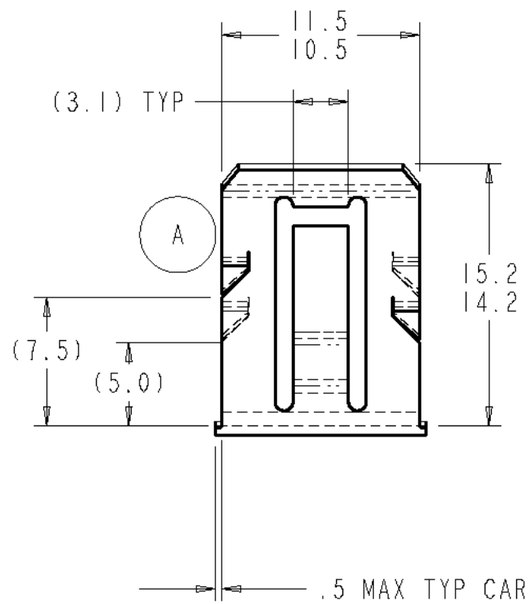

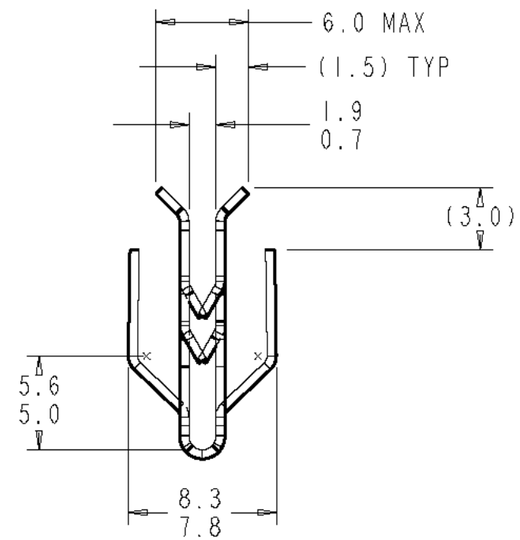

A

ACTUAL SIZE

NOTE: "D" IDENTIFICATION TO APPEAR
ON FACE OF APRT.
DIMENSIONING AND TOLERANCING
PER ASME Y14.5M

REVISIONS

E.C.O	REV	DESCRIPTION	DATE	DR	CK	APP
2617	A	BARB VIEW CHANGED	03/22/00	MV		
		REDRAWN ON NEW BORDER				

MARK TOOL:

TINNERMAN PALNUT
ENGINEERED PRODUCTS (CANADA) CORPORATION

P.O. Box 2492
Hamilton, Ontario, Canada
L8N 3K1

DRAWN BY	DATE	CHECKED	SCALE	APPROVED
P.SELVEY	06/26/98	H.R. RELEASED 07/28/98	3:1	H.RATTMANN 1ST. PROD. 07/28/98

REF:

MATERIAL	THICKNESS	HEAT TREAT	FINISH HARDNESS
SAE 1050-1065	0.51	AUSTEMPER	Rc44-51

NAME	PRODUCT CODE #
TRIM CLIP	930

SPECIAL FEATURES:

SHEET: 1 OF: 1	DWG NO D98901-051M	SIZE B