DWG NO D98823-043M REV B

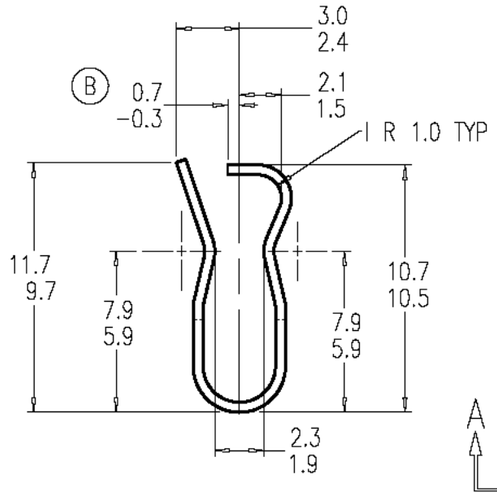


SECTION A-A
SCALE: 4:1

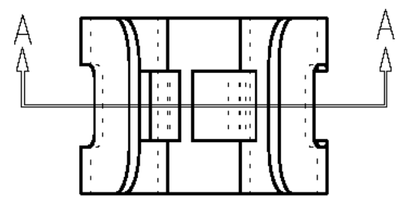


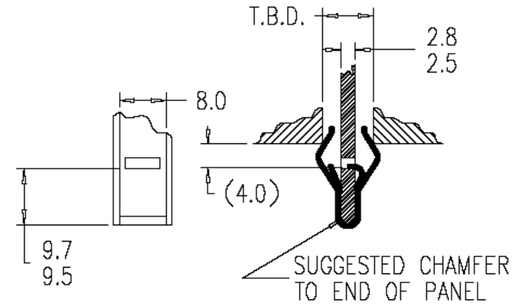


TYPICAL ASSEMBLY
SCALE: 1:1

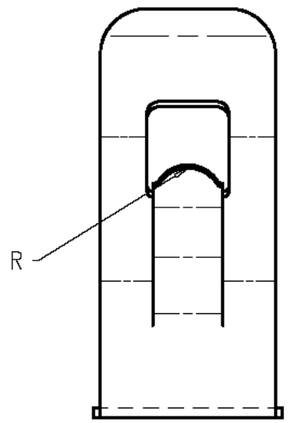


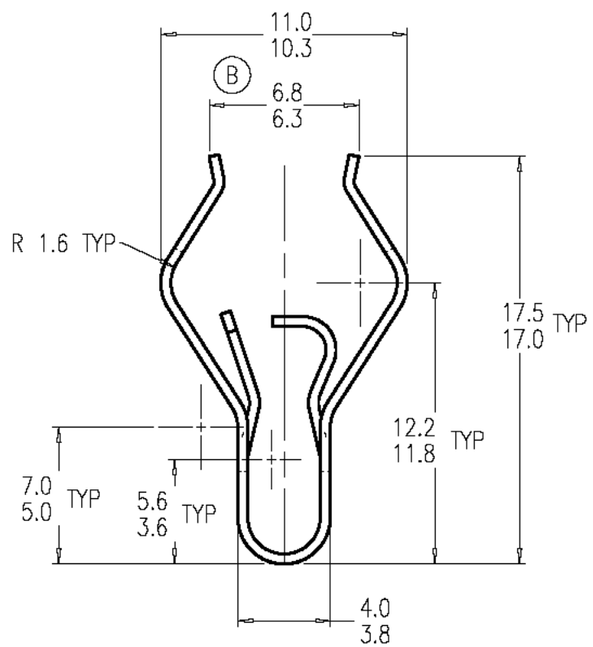


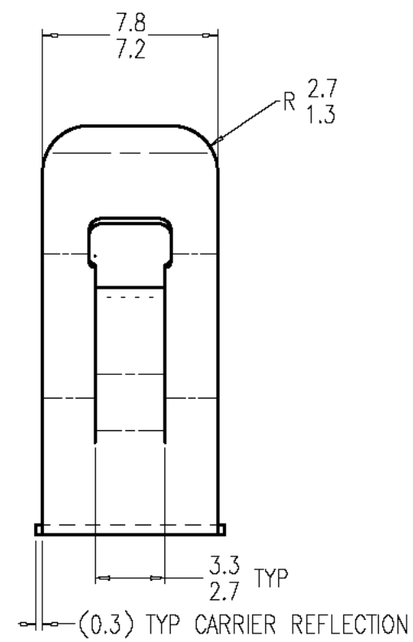

ACTUAL SIZE

NOTE: " D " IDENTIFICATION TO APPEAR ON FACE OF PART.
DIMENSIONING AND TOLERANCING PER ANSI Y14.5M.

REVISIONS

| E.C.O | REV | DESCRIPTION | DATE | DR | CK | APP |
|---|---|---|---|---|---|---|
| 1867 | A | 6.3/5.8 WAS 5.5/5.0 | 03/06/96 | JW | RR | HR |
| | | OUTSIDE LEGS CHANGED PICTORIALLY | | | | |
| 1901 | B | 0.7/-0.3 WAS 1.0/0.0 | 05/15/96 | RG | | |
| | | 6.8/6.3 WAS 6.3/5.8 | | | | |
| | | OUTSIDE LEGS CHANGED PICTORIALLY | | | | |

TINNERMAN PALNUT
ENGINEERED PRODUCTS (CANADA) CORPORATION

Eaton Yale Ltd.
Engineered Fasteners Division
Dominion Plant ,P.O. Box 2492
Hamilton, Ontario, Canada

| DRAWN BY | DATE | CHECKED | SCALE | APPROVED |
|---|---|---|---|---|
| J. WILSON | 01/17/96 | R. RANKIN RELEASED 01/24/96 | 4:1 | H. RATTMANN 1ST. PROD. 01/24/96 |

REF

| MATERIAL | THICKNESS | HEAT TREAT | FINISH HARDNESS |
|---|---|---|---|
| SAE 1050-1065 | 0.43 | AUSTEMPER | Rc44-51 |

NAME TRIM CLIP

PRODUCT CODE # 930

SPECIAL FEATURES:

SHEET 1 OF 1

DWG NO D98823-043M

SIZE B