DWG NO D98810-056M REV C

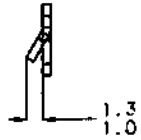

BARB DETAIL
SCALE 3:1

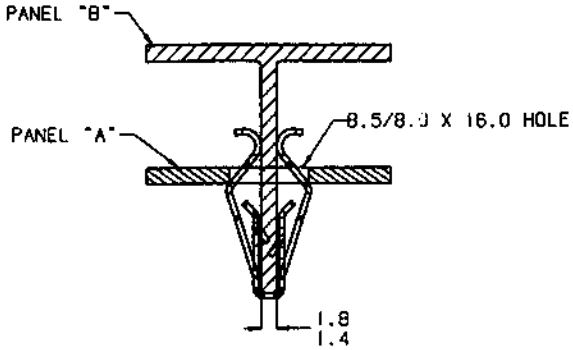

TYPICAL ASSEMBLY
SCALE 2:1

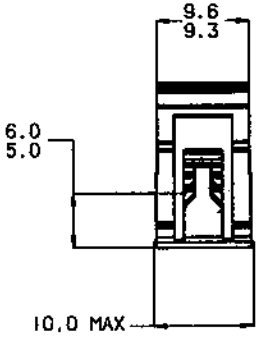

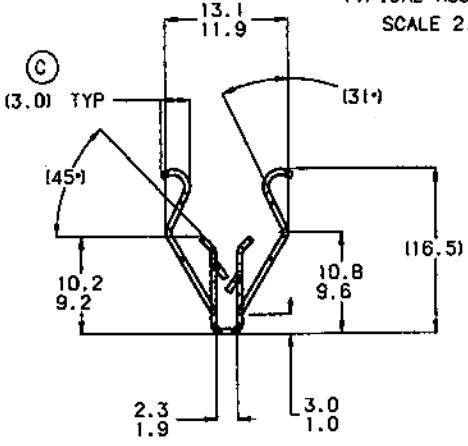

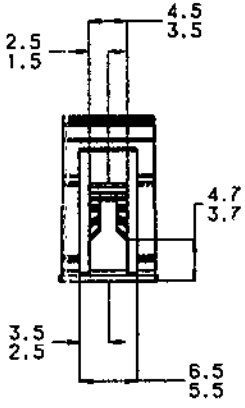

A

NOTE: "D" IDENTIFICATION TO APPEAR ON FACE OF PART.
DIMENSIONING AND TOLERANCING PER ASME Y14.5M

REVISIONS

E.C.O	REV	DESCRIPTION	DATE	DR	CK	APP
2116	A	CHANGE IDENTIFICATION STAMP	7/8/97	PS	RR	HR
2567	B	REDRAWN ON NEW BORDER	11/25/99	PS	RR	HR
2619	C	(3.0) TYP WAS (4.0)	03/28/00	RF	CH	RF

MARK TOOL:

TINNERMAN PALNUT
ENGINEERED PRODUCTS, LLC

DRAWN BY	DATE	CHECKED	SCALE	APPROVED
J. POLZER	11/29/96	R. RANKIN RELEASED 11/29/96	2:1	H. RATTMANN 1ST. PROD. 11/29/96

REF

MATERIAL	THICKNESS	HEAT TREAT	FINISH HARDNESS
SAE 1050-1065	.56	AUSTEMPER	Rc44-51

NAME TRIM CLIP

PRODUCT CODE # 930

SPECIAL FEATURES:

SHEET: 1 OF: 1

DWG NO D98810-056M

SIZE B

ACTUAL SIZE

LOAD TO MATING PART

MATING PART	INSERTION	PULL OUT
A	TBD	TBD
B	TBD	TBD