DWG NO D98810-051M REV C

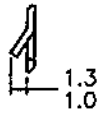

BARB DETAIL
SCALE 3:1

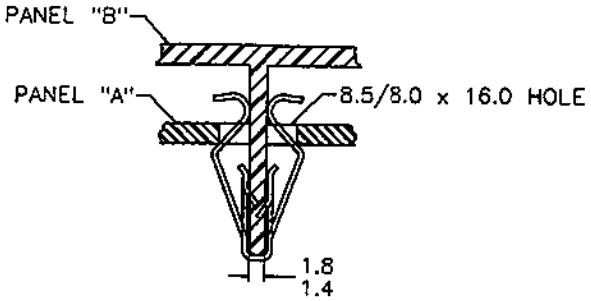

TYPICAL ASSEMBLY
SCALE 2:1

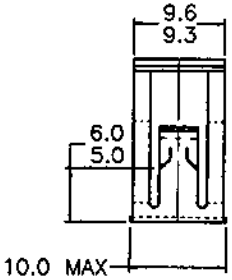

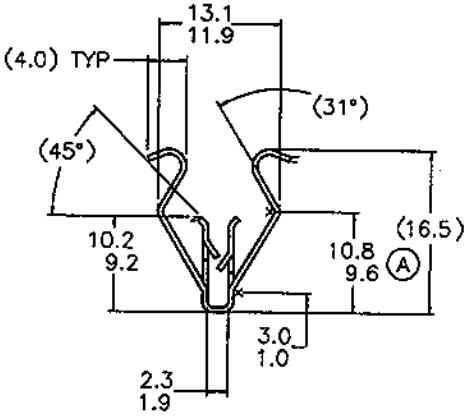

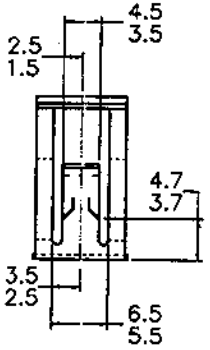

(B) NOTE: " D " IDENTIFICATION TO APPEAR ON FACE OF PART. DIMENSIONING AND TOLERANCING PER ANSI Y14.5M.

ACTUAL SIZE

(C)

REFERENCE VALUES ONLY – LOAD TO MATING PART			
MATING PART	PANEL	INSERTION	PULL OUT
A	8.25 X 16.0 HOLE IN STEEL PANEL	6.8 Kg MAX	3.6 Kg MIN
B	1.6 THICK – ABS PLASTIC PANEL	18.2 Kg MAX	9.0 Kg MIN

REVISIONS

E.C.O	REV	DESCRIPTION	DATE	DR	CK	APP
1787	A	10.8/9.6 WAS 10.6/9.8	09/29/95	JW	RR	MD
2097	B	CHANGE IDENTIFICATION STAMP	7/8/97	PS	RR	HR
2478	C	PERFORMANCE TABLE UPDATED	05/11/99	RF		

TINNERMAN PALNUT ENGINEERED PRODUCTS, LLC P.O. Box 10 Brunswick, OH 44212

DRAWN BY	DATE	CHECKED	SCALE	APPROVED
J. WILSON	07/21/95	R.R. RELEASED 09/26/95	2:1	M.D. 1ST. PROD. 09/26/95

REF

MATERIAL	THICKNESS	HEAT TREAT	FINISH HARDNESS
SAE 1050-1065	.51	AUSTEMPER	Rc44-51

NAME: TRIM CLIP

PRODUCT CODE #: 930

SPECIAL FEATURES:

SHEET 1 OF 1 | DWG-NO D98810-051M | SIZE B