DWG NO D98597-030M REV E

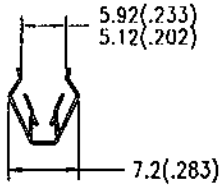

SCALE 2:1

DIMENSIONS SUBJECT TO REVIEW OF LONG TERM CAPABILITIES

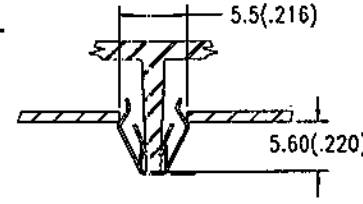

RIB 2.25(.089)/2.0(.079) THK.

NOTE: 5.92(.233)/5.12(.202) TO BE CHECKED WHEN WHEN PART IS COMPRESSED TO 7.2(.283)

TYPICAL ASSEMBLY
SCALE 2:1

NONCONTROLLED COPY

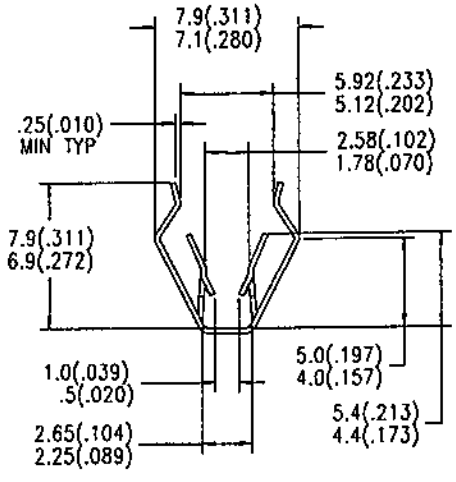

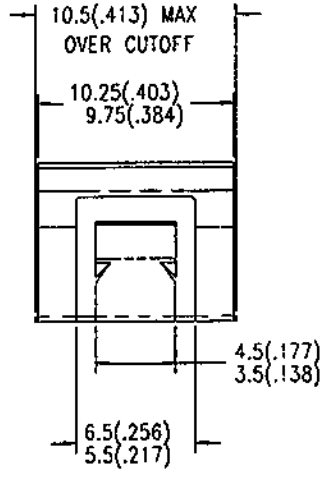

ACTUAL SIZE

NOTE: "D" IDENTIFICATION TO APPEAR ON FACE OF PART

LOAD TO MATING PART. (LBS.)		
MATING PART	INSERTION	PULL-OUT
B	13.6Kg. MAX. (30.0)	6.0 KG. MIN.
A	3Kg(6.6)MAX.	2.0-5.0 Kg.

REVISIONS

E.C.O	REV	DESCRIPTION	DATE	DR	CK	APP
1786	E	REDRAWN ON NEW BORDER	08/26/94	MM	RR	JK

TINNERMAN PALNUT
ENGINEERED PRODUCTS, LLC

DRAWN BY	DATE	CHECKED	SCALE	APPROVED
S. SZOKE	04/14/89	R. RANKIN RELEASED 2/11/93	4:1	H. RATTMANN 1ST. PROD. 2/11/93

REF

MATERIAL	THICKNESS	HEAT TREAT	FINISH HARDNESS
SAE 1050-1065	0.30(.012)	AUSTEMPER	Rc44-51

NAME	PRODUCT CODE #
TRIM CLIP	930

SPECIAL FEATURES:

SHEET 1 OF 1	DWG NO D98597-030M	SIZE B