DWG
SZ002003

ASSEMBLY EFFICIENCY DEPENDS ON ADHERENCE TO STUD SPECIFICATIONS

TO ASSURE ADEQUATE STUD PROJECTION AND PROPER INITIAL THREADING, INCREASE LENGTH T+7.8 BY THE AMOUNT REQUIRED FOR UNCOMPRESSED GASKETS OR ANTICIPATED MISMATCH OF TRIM CONTOURS.

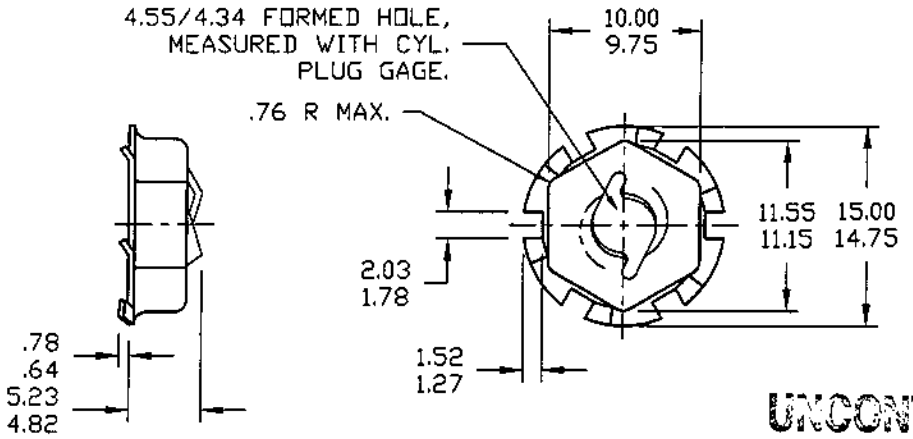

STUD FABRICATED FROM WIRE

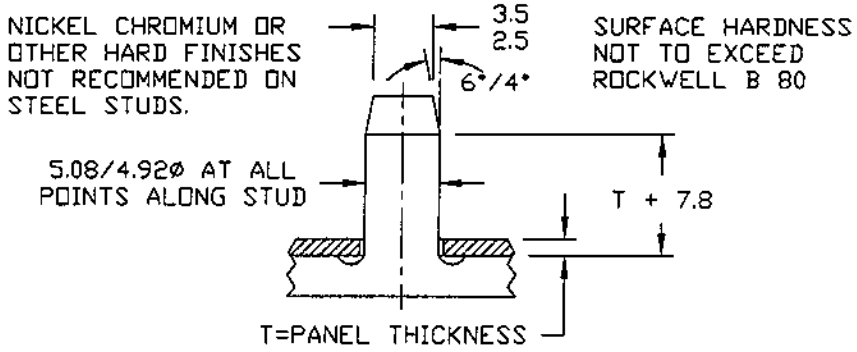

UNCONTROLLED

MAY 1 0 2002

DIE CAST STUD

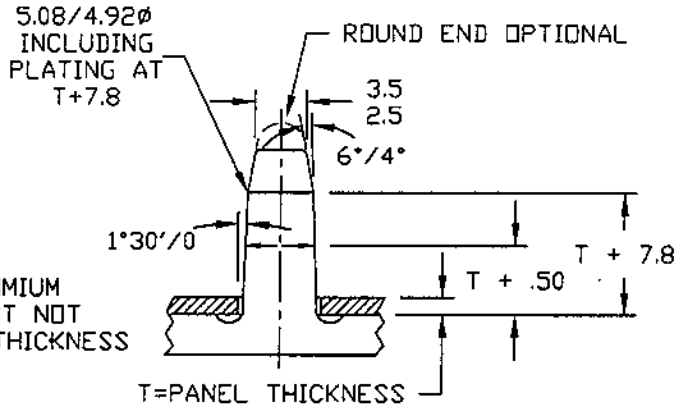

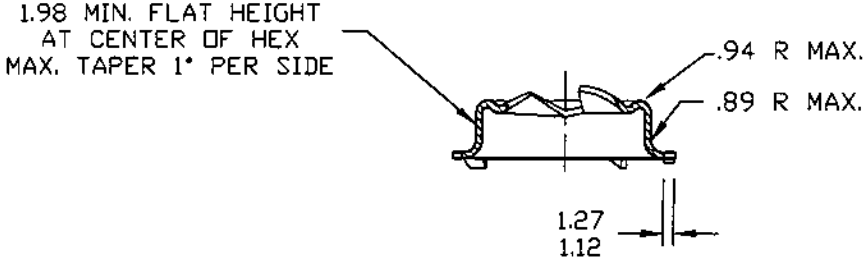

Controlled copy must be in Red

DATE	REV	DESCRIPTION	BY
2/19/02	B	REFORMATTED; NO CHANGES; NEW LOGO UPDATED	CNC
3/31/00	A	REDRAWN TO CAD SYSTEM	F.E.

TINNERMAN PALNUT
ENGINEERED PRODUCTS, LLC
MOUNTAINSIDE, NEW JERSEY

MATERIAL:
SPRING STEEL-SAE1050-0.51THK

HARDNESS: ROCKWELL 30N 63-71

PAL® PALNUT® ON SERT® PUSHNUT®

TITLE
5x10x15mm SELF THREADING NUT FLAT WASHER TYPE WITH SIX TEETH STYLE SH.

DRAWN: CYL	RELEASED	SCALE
DATE: 2/21/78	PART No: SZ002003	NONE
CHECKED: CNCW 2.19.02	DWG No. SZ002003	
APPROVED: 2/19/02		