DWG NO D99353-M42141 REV

NOTES:
1. STEEL PANEL: BURR HEIGHT MAY NOT EXCEED .12 ON PANEL EDGE
2. MAX. DRIVE TORQUE NOT TO EXCEED .5Nm WHEN ASSEMBLED WITH 4.2X1.41 TYPE B TAPPING SCREW
3. MAX. INSERTION FORCE 60N
4. ULTIMATE TORQUE 5Nm MIN.
5. MFG IDENTIFICATION TO APPEAR ON FACE OF PART.
DIMENSIONING AND TOLERANCING PER ASME Y14.5M.

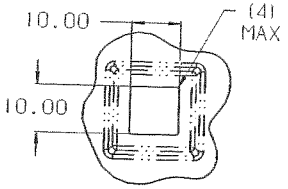

PANEL HOLE

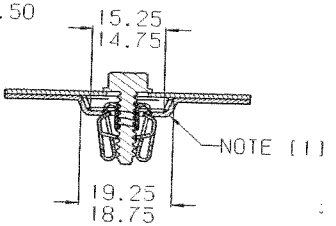

TYPICAL ASSEMBLY

TYPICAL INSTALLATION FOR RECESSED APPLICATION IN STEEL

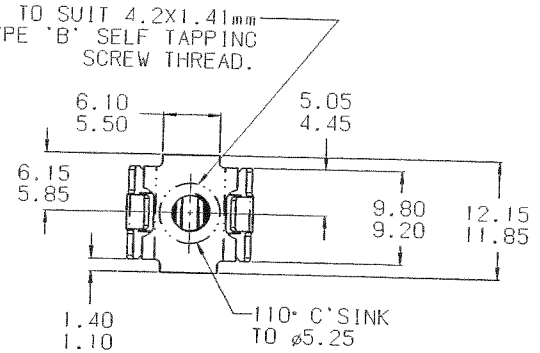

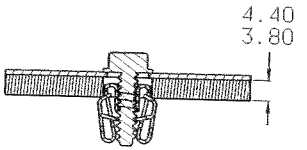

TYPICAL INSTALLATION FOR PLASTIC PANELS

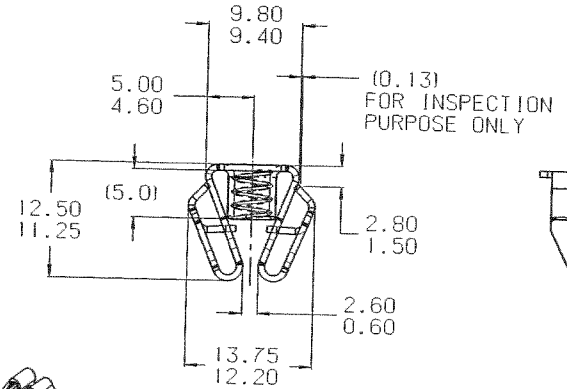

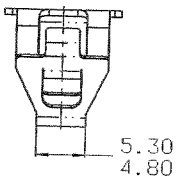

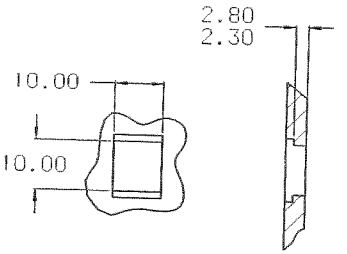

PANEL OPENING

ACTUAL SIZE

REVISIONS

E.C.O.	REV	DESCRIPTION	DATE	DR	CK	APP

CONTROLLED IF RED

NOTICE TO PERSONS RECEIVING THIS DRAWING AND/OR TECHNICAL INFORMATION.
TINNERMAN PALNUT ENGINEERED PRODUCTS CLAIMS PROPRIETARY RIGHTS TO THE MATERIAL DISCLOSED HEREON. THIS DRAWING AND/OR TECHNICAL INFORMATION IS ISSUED IN CONFIDENCE FOR ENGINEERING INFORMATION ONLY AND MAY NOT BE REPRODUCED OR USED TO MANUFACTURE ANYTHING SHOWN OR REFERRED TO HEREON WITHOUT DIRECT WRITTEN PERMISSION FROM TINNERMAN PALNUT ENGINEERED PRODUCTS. THIS DRAWING AND/OR TECHNICAL INFORMATION IS THE PROPERTY OF TINNERMAN PALNUT ENGINEERED PRODUCTS AND IS LOANED FOR MUTUAL ASSISTANCE.

MARK TOOL:

TINNERMAN connection engineering
P.O. Box 2492
Hamilton, Ontario, Canada
L8N 3K1

DRAWN BY	DATE	CHECKED	SCALE	APPROVED
T. TRAN	09/14/07	RELEASED 11-6-2007	2:1	1ST. PROD. 11/6/07

REF: IPOV429V10

MATERIAL	THICKNESS	HEAT TREAT	FINISH HARDNESS
SAE 1050-1065	.64	AUSTEMPER	Rc44-51

NAME
MULTI-THREAD CLIP

SPECIAL FEATURES: M4.2 X 1.41 THREAD

SHEET: 1 OF: 1 | DWG NO D99353-M42141 | SIZE B

REVISED: APRIL 25, 2007