DWG NO D98922-M61 REV A

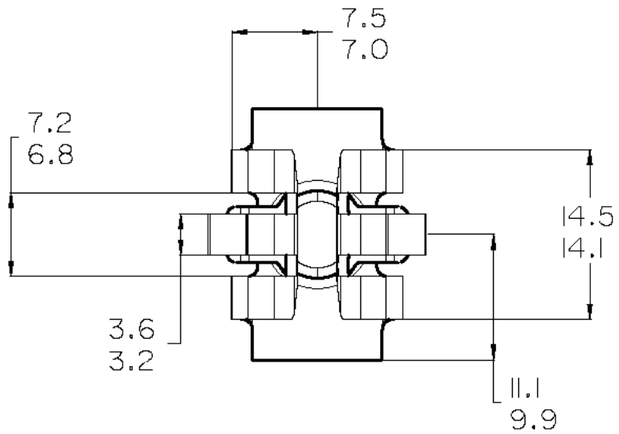

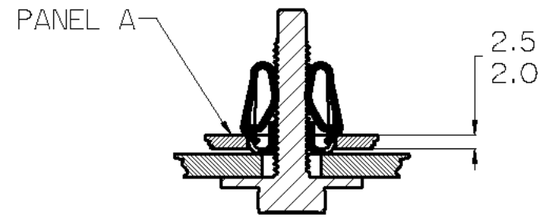

TYPICAL ASSEMBLY
SCALE: 1:1

RECOMMENDED HOLE SIZE: 14.9mm SQ. WITH 0.5mm CORNER RADII

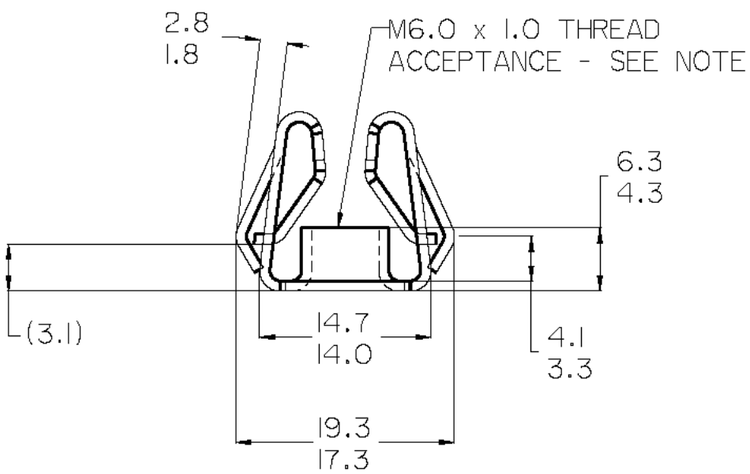

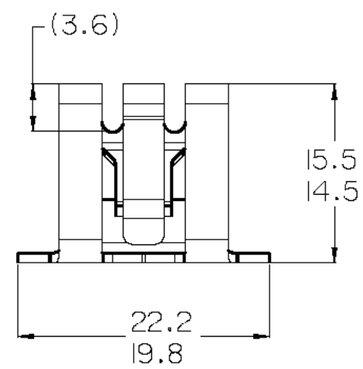

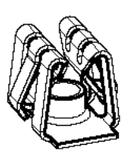

SCALE 1.000

NOTE: "D" IDENTIFICATION TO APPEAR ON FACE OF PART.
DIMENSIONING AND TOLERANCING PER ASME Y14.5M.

PERFORMANCE SPECIFICATIONS	
MAX PREVAILING TORQUE - 1ST ON	0.9 Nm (7.97 lb-in)
MIN PREVAILING TORQUE - 1ST OFF	0.11 Nm (0.97 lb-in)
MIN PREVAILING TORQUE - 5TH OFF	0.11 Nm (0.97 lb-in)
MIN DESTUCT TORQUE	15.0 Nm (132.76 lb-in)
PROOF LOAD	18.4 KN (OVER ø7.5 HOLE) (A)

NOTE: TORQUE SPECIFICATIONS APPLY WHEN TESTED WITH M6.0 x 1.0 6G SCREW, PROPERTY CLASS 9.8 FINISH GM6280M

REVISIONS

E.C.O	REV	DESCRIPTION	DATE	DR	CK	APP
2484	A	18.4 KN WAS 18.4K	05/17/99	PS		

MARK TOOL:

TINNERMAN PALNUT
ENGINEERED PRODUCTS (CANADA) CORPORATION
Dominion Plant, P.O. Box 2492
Hamilton, Ontario, Canada

DRAWN BY	DATE	CHECKED	SCALE	APPROVED
J. WILSON	03/19/99	R. RANKIN RELEASED 04/07/99	2:1	H. RATTMANN 1ST. PROD. 04/07/99

REF

MATERIAL	THICKNESS	HEAT TREAT	FINISH HARDNESS
SAE 1050-1065	0.86	AUSTEMPER	Rc44-51

NAME	PRODUCT CODE #
EXPANSION TYPE	900

SPECIAL FEATURES:

SHEET 1 OF 1	DWG NO	SIZE
	D98922-M61	B