DWG NO D99181-M61 REV

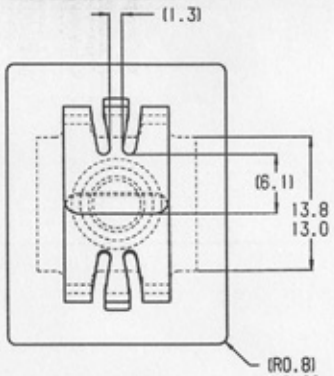

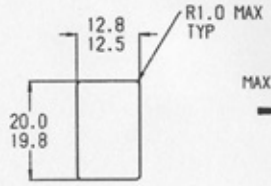

PANEL LAYOUT
SCALE 1:1

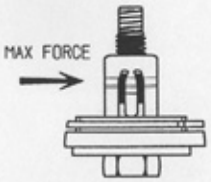

RECOMMENDED
CLIP ORIENTATION

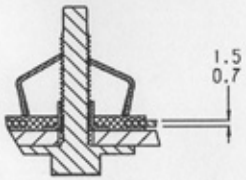

TYPICAL ASSEMBLY
SCALE 1:1

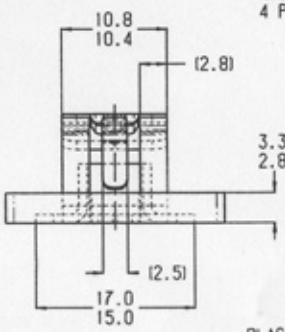

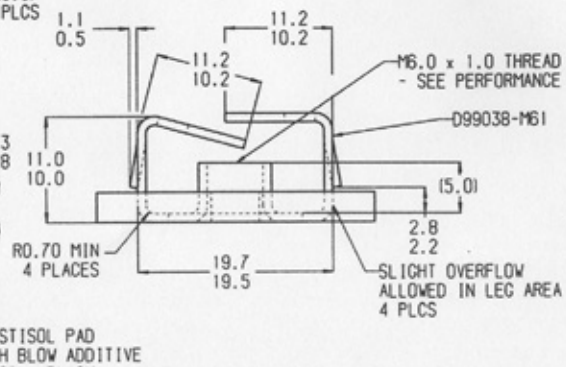

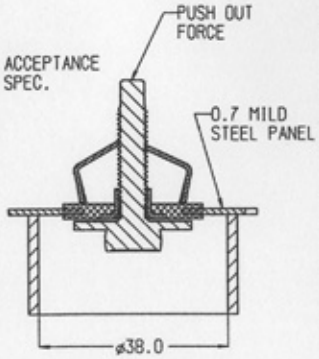

TEST PROCEDURE

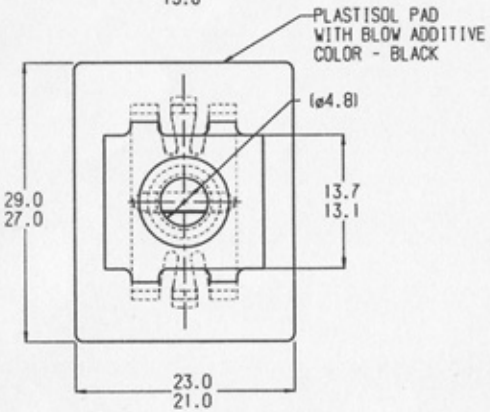

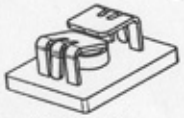

ACTUAL SIZE

NOTE: "T" IDENTIFICATION TO APPEAR ON FACE OF PART. DIMENSIONING AND TOLERANCING PER ASME Y14.5M

PERFORMANCE SPECIFICATIONS	
MAX PREVAILING TORQUE - 1ST ON	2 Nm (17.71 lb-in)
MIN PUSH OUT	900N (202 LBS)
MAX INSERTION	(10 LBS TARGET) TBD
PROOF LOAD	18.4 KN (OVER ø7.5 HOLE)

NOTE: TORQUE SPECIFICATIONS APPLY WHEN TESTED WITH M6.0 X 1.0 6G SCREW. FINISH CM7114M

REVISIONS

E.C.O.	REV	DESCRIPTION	DATE	DR	CK	APP

CONTROLLED IF RED

NOTICE TO PERSONS RECEIVING THIS DRAWING AND/OR TECHNICAL INFORMATION.
TINNERMAN PALNUT ENGINEERED PRODUCTS CLAIMS PROPRIETARY RIGHTS TO THE MATERIAL DISCLOSED HEREON. THIS DRAWING AND/OR TECHNICAL INFORMATION IS ISSUED IN CONFIDENCE FOR ENGINEERING INFORMATION ONLY AND MAY NOT BE REPRODUCED OR USED TO MANUFACTURE ANYTHING SHOWN OR REFERRED TO HEREON WITHOUT DIRECT WRITTEN PERMISSION FROM TINNERMAN PALNUT ENGINEERED PRODUCTS. THIS DRAWING AND/OR TECHNICAL INFORMATION IS THE PROPERTY OF TINNERMAN PALNUT ENGINEERED PRODUCTS AND IS LOANED FOR MUTUAL ASSISTANCE.

MARK TOOL:

TINNERMAN PALNUT
ENGINEERED PRODUCTS (CANADA) CORPORATION
P.O. Box 2492
Hamilton, Ontario, Canada
L8N 3K1

DRAWN BY	DATE	CHECKED	SCALE	APPROVED
C. OPREA	07/26/04	R. Allen RELEASED 7/29/2004	2:1	H. Rathman 1ST. PROD. 08-03-04

REF: DX7773-M61 / D99038-M61

MATERIAL	THICKNESS	HEAT TREAT	FINISH HARDNESS
SAE 1050-1065	0.86	AUSTEMPER	Rc 44-51

NAME EXPANSION TYPE

SPECIAL FEATURES: M6.0 x 1.0 / BASE PART D99038-M61 + PLASTISOL PAD

SHEET: 1 OF: 1 | DWG NO D99181-M61 | SIZE B

REVISED: MAY 31, 2004