DWG NO D98952-M61 REV A

REVISIONS						
E.C.O	REV	DESCRIPTION	DATE	DR	CK	APP
2934	A	SLOTS REVISED	11/30/01	ML		
		89 N WAS 134 N				

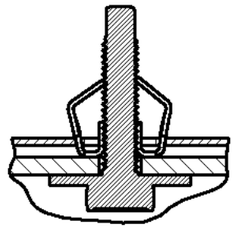

TYPICAL ASSEMBLY
SCALE: 1:1

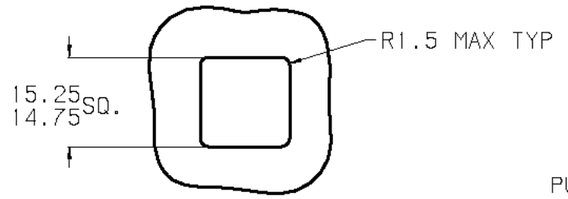

0.65/1.80
PANEL THICKNESS
SCALE: 1:1

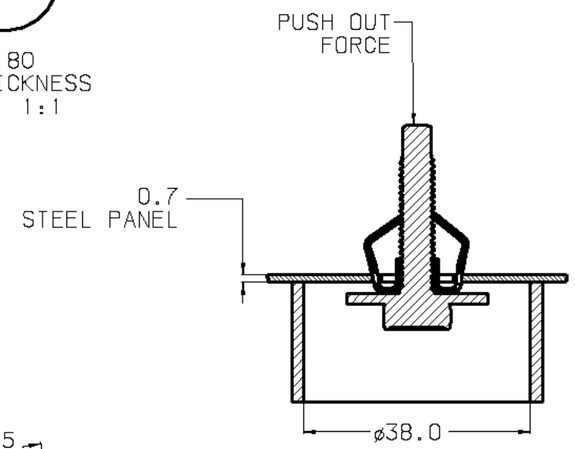

TEST PROCEDURE
SCALE: 1:1

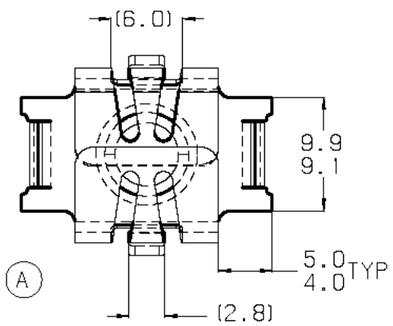

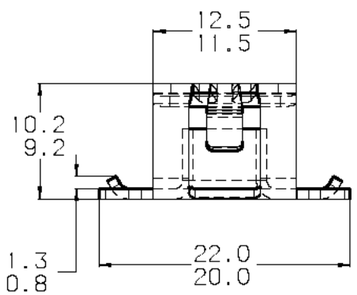

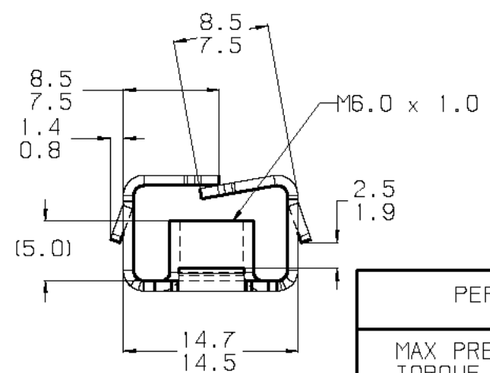

PERFORMANCE SPECIFICATIONS	
MAX PREVAILING TORQUE - 1ST ON	2.0 Nm
PROOF LOAD OVER 7.5MM PANEL	18.5 KN
MIN DESTRUCT TORQUE	11 Nm
MIN PUSH OUT (SCREW ENGAGED)	900 N
MAX INSERTION	89 N (A)
MAX INSTALLATION TORQUE	10 Nm

NOTE: TORQUE SPECIFICATIONS APPLY WHEN TESTED WITH M6.0 X 1.0 6G SCREW. PROPERTY CLASS 9.8

NOTE: "D" IDENTIFICATION TO APPEAR ON FACE OF PART. DIMENSIONING AND TOLERANCING PER ASME Y14.5M

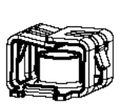

ACTUAL SIZE

MARK TOOL:

TINNERMAN PALNUT
ENGINEERED PRODUCTS (CANADA) CORPORATION

P.O. Box 2492
Hamilton, Ontario, Canada
L8N 3K1

DRAWN BY	DATE	CHECKED	SCALE	APPROVED
M. LUANG-ASA	02/18/00	D.S. RELEASED 03/29/00	2.000	H.RATTMANN 1ST. PROD. 03/29/00

REF:

MATERIAL	THICKNESS	HEAT TREAT	FINISH HARDNESS
SAE 1050-1065	0.86	AUSTEMPER	Rc44-51

NAME: EXPANSION TYPE

PRODUCT CODE #: 900

SPECIAL FEATURES:

SHEET: 1 OF: 1

DWG NO D98952-M61

SIZE B