DWG NO D99294-071M REV

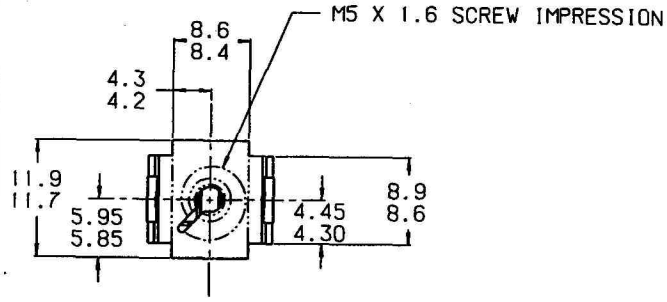

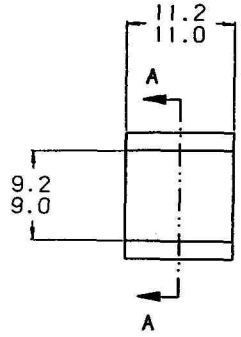

HOLE LAYOUT
IN PLASTIC PANEL

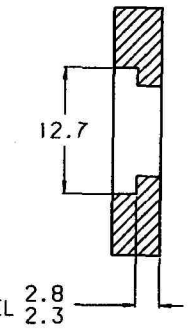

SECTION A-A

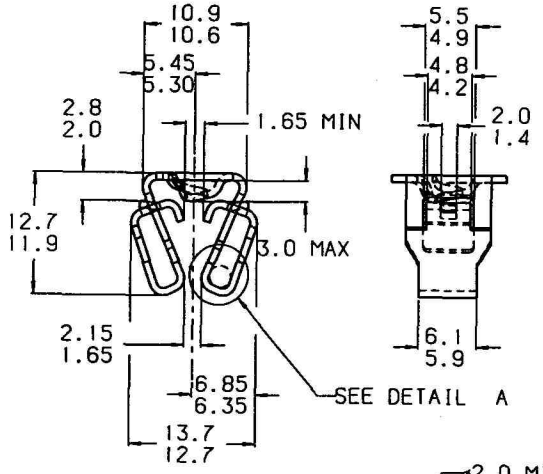

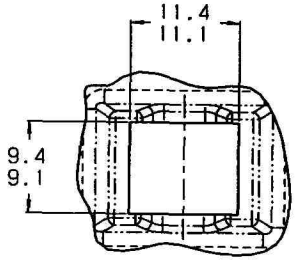

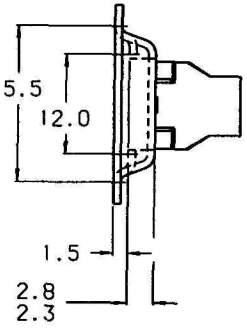

TYPICAL ASSEMBLY

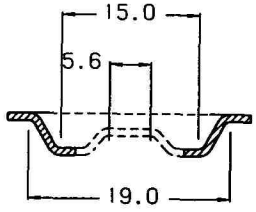

HOLE LAYOUT
IN STEEL PANEL

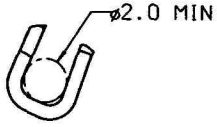

DETAIL A
SCALE 4:1

ACTUAL SIZE

NOTE: MFG IDENTIFICATION TO APPEAR ON FACE OF PART.
DIMENSIONING AND TOLERANCING PER ASME Y14.5M.

PERFOMANCE SPECIFICATIONS	
MAX. PUSH IN FORCE	111 N
MIN. PULL OUT FORCE	44 N
INSTALLATION TORQUE	1.0-1.6 Nm

REVISIONS

E.C.O.	REV	DESCRIPTION	DATE	DR	CK	APP

CONTROLLED IF RED

NOTICE TO PERSONS RECEIVING THIS DRAWING AND/OR TECHNICAL INFORMATION:
TINNERMAN PALNUT ENGINEERED PRODUCTS CLAIMS PROPRIETARY RIGHTS TO THE MATERIAL DISCLOSED HEREON. THIS DRAWING AND/OR TECHNICAL INFORMATION IS ISSUED IN CONFIDENCE FOR ENGINEERING INFORMATION ONLY AND MAY NOT BE REPRODUCED OR USED TO MANUFACTURE ANYTHING SHOWN OR REFERRED TO HEREON WITHOUT DIRECT WRITTEN PERMISSION FROM TINNERMAN PALNUT ENGINEERED PRODUCTS. THIS DRAWING AND/OR TECHNICAL INFORMATION IS THE PROPERTY OF TINNERMAN PALNUT ENGINEERED PRODUCTS AND IS LOANED FOR MUTUAL ASSISTANCE.

MARK TOOL:

TINNERMAN PALNUT
ENGINEERED PRODUCTS (CANADA) CORPORATION
P.O. Box 2492
Hamilton, Ontario, Canada
L8N 3K1

DRAWN BY	DATE	CHECKED	SCALE	APPROVED
P. SELVEY	09/25/06	RELEASED 9-28-2006	3:1	1ST. PROD. 29 SEP 2006

REF: QUOTE #26745-001 / DX9718-071M / M/U D99178-071M

MATERIAL	THICKNESS	HEAT TREAT	FINISH HARDNESS
SAE 1050-1065	0.71	AUSTEMPER	Rc44-51

NAME
EXPANSION TYPE

SPECIAL FEATURES: M5 X 1.6 SCREW IMPRESSION

SHEET: 1
OF: 1

DWG NO D99294-071M

SIZE B

REVISED: MAY 31, 2004