DWG NO D99025-064M REV

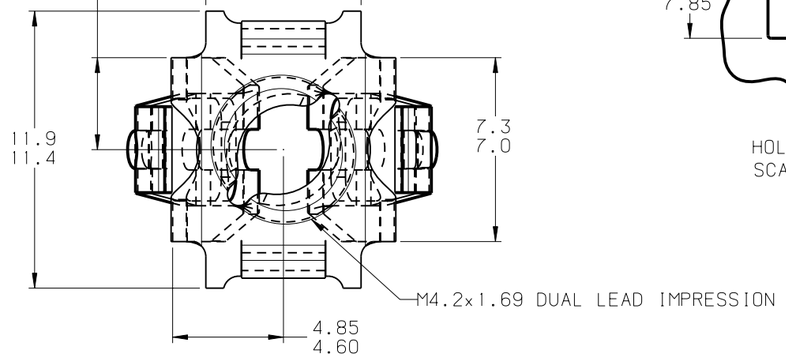

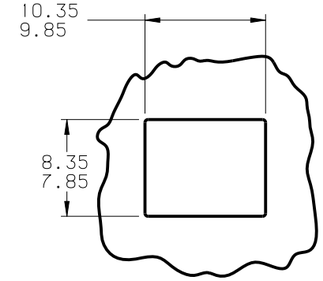

HOLE LAYOUT
SCALE 2:1

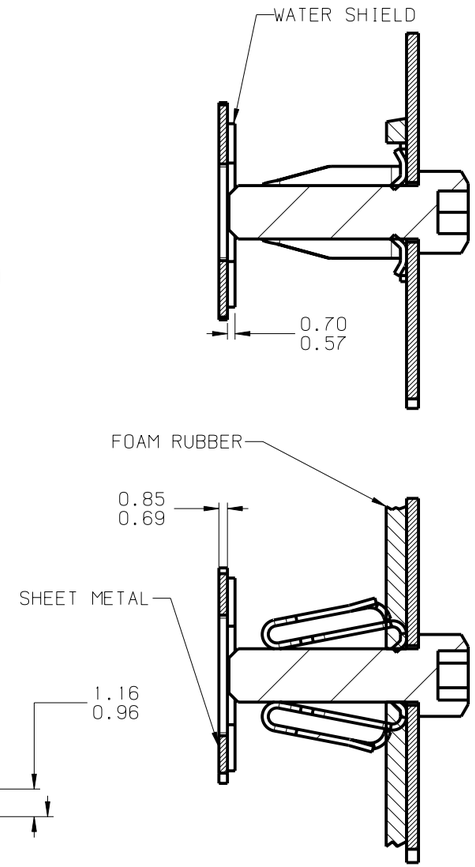

TYPICAL ASSEMBLY
SCALE: 2:1

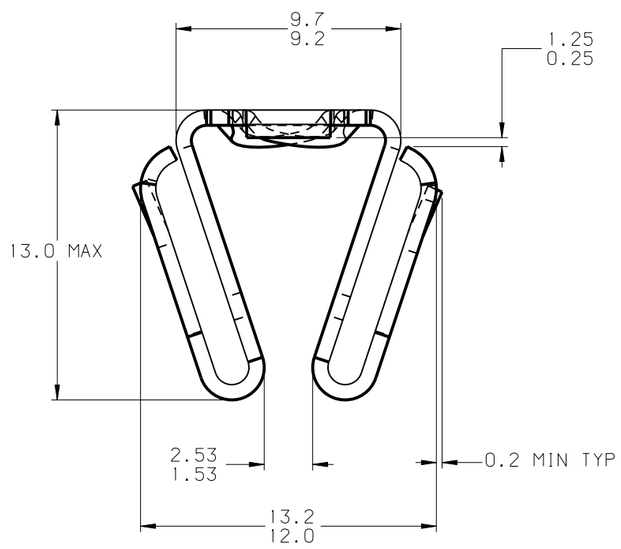

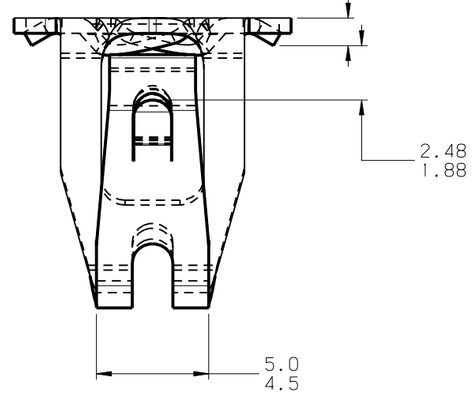

SCALE 1:1

NOTE: "D" IDENTIFICATION TO APPEAR ON FACE OF PART.
DIMENSIONING AND TOLERANCING PER ASME Y14.5M.

PERFORMANCE SPECIFICATIONS

MAX. INSERTION ..... TBD
MIN. RETENTION ..... TBD
MAX. PREVAILING TORQUE 1st ON ..... TBD
FIRST OFF ..... TBD
FIFTH OFF ..... TBD
MIN. DESTRUCT ..... TBD

REVISIONS

E.C.O	REV	DESCRIPTION	DATE	DR	CK	APP

MARK TOOL:

TINNERMAN PALNUT
ENGINEERED PRODUCTS (CANADA) CORPORATION

P.O. Box 2492
Hamilton, Ontario, Canada
L8N 3K1

DRAWN BY	DATE	CHECKED	SCALE	APPROVED
R. GUARASCIA	05/31/02	RELEASED	4:1	1ST. PROD.

REF:

MATERIAL	THICKNESS	HEAT TREAT	FINISH HARDNESS
SAE 1050-1065	0.64	AUSTEMPER	Rc44-51

NAME: EXPANSION TYPE

PRODUCT CODE #: 900

SPECIAL FEATURES: M4.2 X 1.69 SELF TAPPING SCREW

SHEET: 1 OF: 1

DWG NO D99025-064M

SIZE B

REVISED: JANUARY 18. 2002