DWG NO D98919-071M REV B

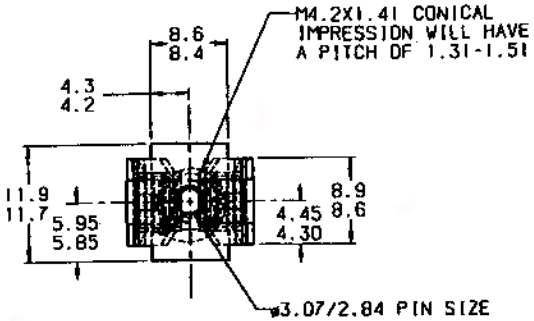

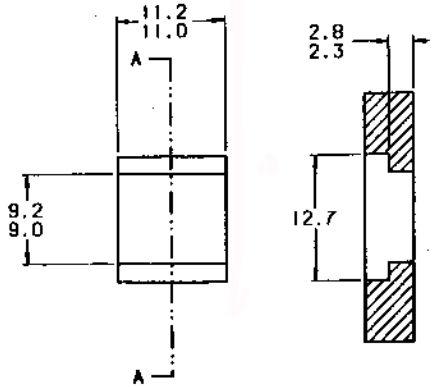

HOLE LAYOUT IN A PLASTIC PANEL

VIEW A-A

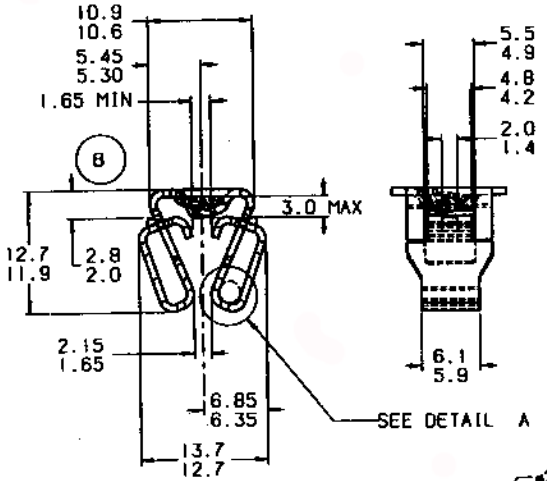

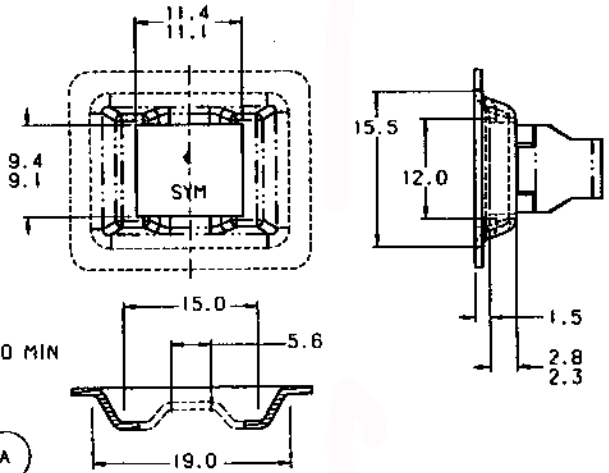

HOLE LAYOUT IN A STEEL PANEL

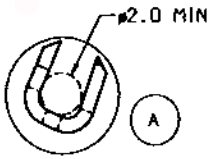

DETAIL A

INSERTION FORCE 11N MAX.
RETENTION FORCE 44N MIN.
MAX PREVAILING TORQUE 1ST ON 0.9NM
FIRST OFF 0.11NM
FIFTH OFF 0.11NM
MIN DESTRUCTIVE TORQUE 4.0NM
RECOMMENDED INSTALLATION TORQE 2.9NM

NOTE: "D" IDENTIFICATION TO APPEAR ON FACE OF PART. DIMENSIONING AND TOLERANCING PER ASME Y14.5M.

TYPICAL ASSEMBLY

A

REVISIONS

E.C.O	REV	DESCRIPTION	DATE	DR	CK	APP
2637	A	CHANGE PICTORALLY	03/25/00	MV	RR	HR
		AUXILARY VIEW ADDED				
		2.0 MIN ADDED				
2670	B	DIMENSION LINE MOVED	07/10/00	MV	PK	

MARK TOOL:

TINNERMAN PALNUT
ENGINEERED PRODUCTS (CANADA) CORPORATION

P.O. Box 2492
Hamilton, Ontario, Canada
L8N 3K1

DRAWN BY	DATE	CHECKED	SCALE	APPROVED
P.SELVEY	12/11/98	T.GALANTE RELEASED 12/14/98	2:1	H.RATTMANN 1ST. PROD. 12/15/98

REF:

MATERIAL	THICKNESS	HEAT TREAT	FINISH HARDNESS
SAE 1050-1065	0.71	AUSTEMPER	Rc44-51

NAME: EXPANSION TYPE

PRODUCT CODE # 900

SPECIAL FEATURES: M4.2X1.41-TYPE B-TAPPING SCREW-THRU HARDENED

SHEET: 1 OF: 1

DWG NO D98919-071M

SIZE B