DWG NO D98912-064M REV A

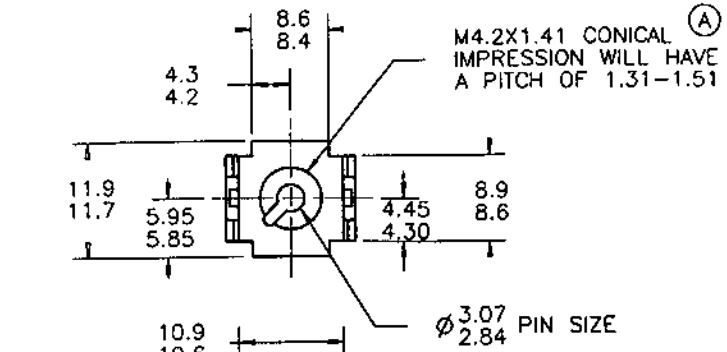

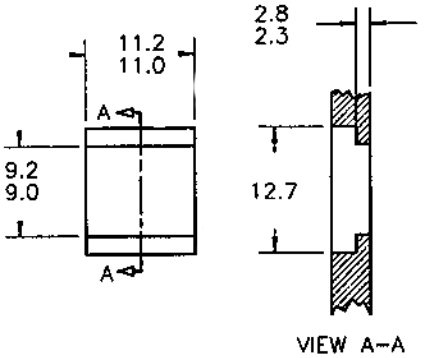

HOLE LAYOUT
IN A PLASTIC PANEL

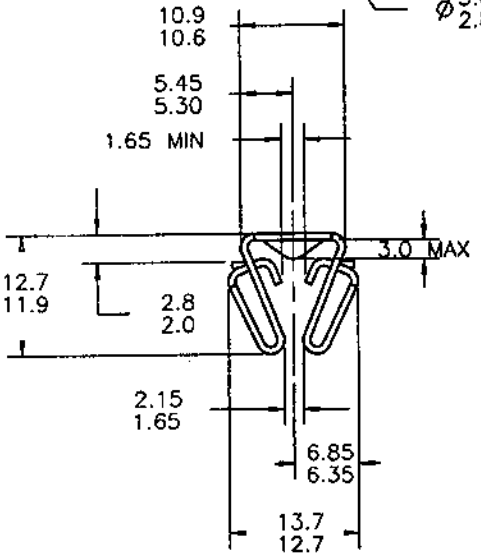

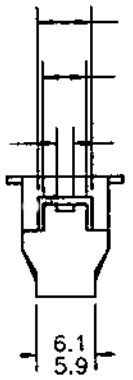

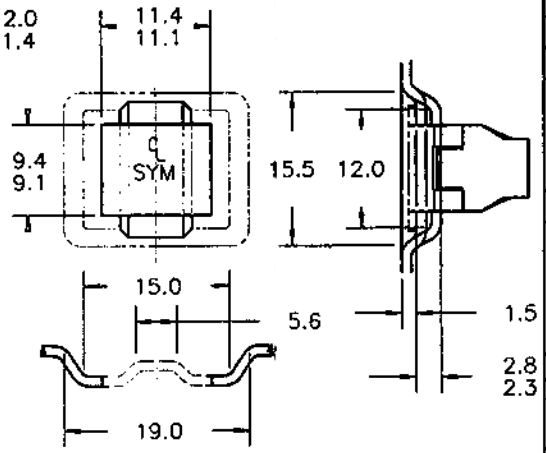

HOLE LAYOUT
IN A STEEL PANEL

INSERTION FORCE 111N MAX.
RETENTION FORCE 44N MIN
MAX PREVAILING TORQUE 1ST ON 0.9NM
FIRST OFF 0.11NM
FIFTH OFF 0.11NM
MIN DESTRUCTIVE TORQUE 4.0NM
RECOMMENDED INSTALLATION TORQUE 2.9NM

NOTE: "D" IDENTIFICATION TO APPEAR
ON FACE OF PART.
DIMENSIONING AND TOLERANCING
PER ASME Y14.5M.

TYPICAL ASSEMBLY

REVISIONS

E.C.O	REV	DESCRIPTION	DATE	DR	CK	APP
	A	NOTE ADDED	12-9-98	PS		
		SCREW CALL OUT ADDED				

CONTROLLED IF RED

MARK TOOL:

TINNERMAN PALNUT
ENGINEERED PRODUCTS, LLC

DRAWN BY	DATE	CHECKED	SCALE	APPROVED
P. SELVEY	11/02/98	I.G. RELEASED 11-3-98	2:1	H.R. 1ST. PROD. 11-3-98

REF

MATERIAL	THICKNESS	HEAT TREAT	FINISH HARDNESS
SAE 1050-1065	0.64	AUSTEMPER	Rc44-51

NAME: EXPANSION TYPE (A)

PRODUCT CODE #: 900

SPECIAL FEATURES: M4.2X1.41-TYPE B-TAPPING SCREW-THRU HARDENED

SHEET 1 OF 1 | DWG NO D98912-064M | SIZE B