DWG NO D99288-M42141 REV

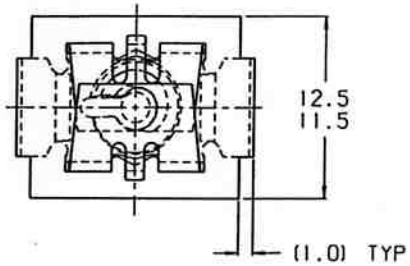

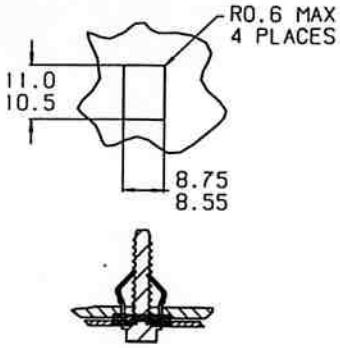

TYPICAL ASSEMBLY
RECOMMENDED HOLE DIMENSIONS
0.7-2.15mm PANEL THICKNESS
(SCALE 1:1)

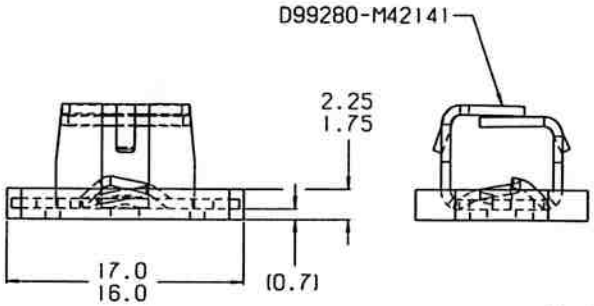

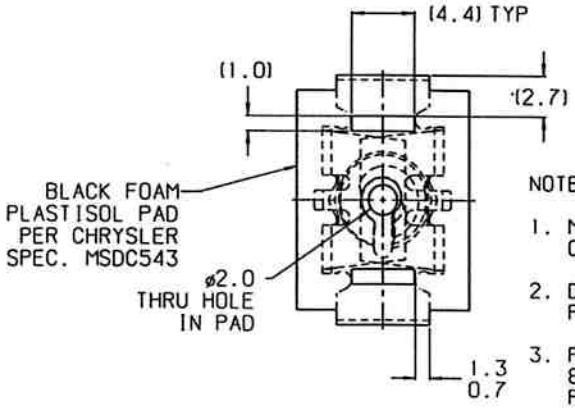

NOTES:

1. MFG IDENTIFICATION TO APPEAR ON FACE OF PART.
2. DIMENSIONING AND TOLERANCING PER ASME Y14.5M.
3. PUSH-IN FORCE INTO AN 8.7mmX11.0mm HOLE IN MAXIMUM PANEL THICKNESS NOT TO EXCEED 63.0 N (14 LBS).
4. DESTRUCT TORQUE 3.39 Nm.
5. MIN PUSH-OUT (WITHOUT SCREW) 89N.

ACTUAL SIZE

REVISIONS

E.C.O.	REV	DESCRIPTION	DATE	DR	CK	APP

CONTROLLED IF RED

NOTICE TO PERSONS RECEIVING THIS DRAWING AND/OR TECHNICAL INFORMATION:
TINNERMAN PALNUT ENGINEERED PRODUCTS CLAIMS PROPRIETARY RIGHTS TO THE MATERIAL DISCLOSED HEREON. THIS DRAWING AND/OR TECHNICAL INFORMATION IS ISSUED IN CONFIDENCE FOR ENGINEERING INFORMATION ONLY AND MAY NOT BE REPRODUCED OR USED TO MANUFACTURE ANYTHING SHOWN OR REFERRED TO HEREON WITHOUT DIRECT WRITTEN PERMISSION FROM TINNERMAN PALNUT ENGINEERED PRODUCTS. THIS DRAWING AND/OR TECHNICAL INFORMATION IS THE PROPERTY OF TINNERMAN PALNUT ENGINEERED PRODUCTS AND IS LOANED FOR MUTUAL ASSISTANCE.

MARK TOOL:

TINNERMAN PALNUT
ENGINEERED PRODUCTS (CANADA) CORPORATION
P.O. Box 2492
Hamilton, Ontario, Canada
L8N 3K1

DRAWN BY	DATE	CHECKED	SCALE	APPROVED
D.BUDNITSKY	08/14/06	RELEASED 8-14-2006	2:1	1ST. PROD. 15 AUG 2006

REF: DX9109-M42141 REV "A". QUOTE #25244-001

MATERIAL	THICKNESS	HEAT TREAT	FINISH HARDNESS
SAE 1050-1065	0.64	AUSTEMPER	Rc44-51

NAME

EXPANSION TYPE

SPECIAL FEATURES: M4.2X1.41 SCREW

SHEET: 1
OF: 1

DWG NO D99288-M42141

SIZE B

REVISED: MAY 31, 2004