DWG NO D99191-M42141 REV

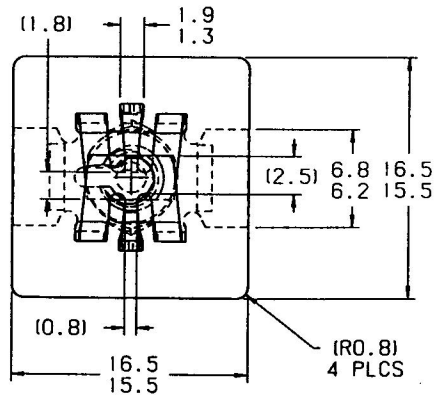

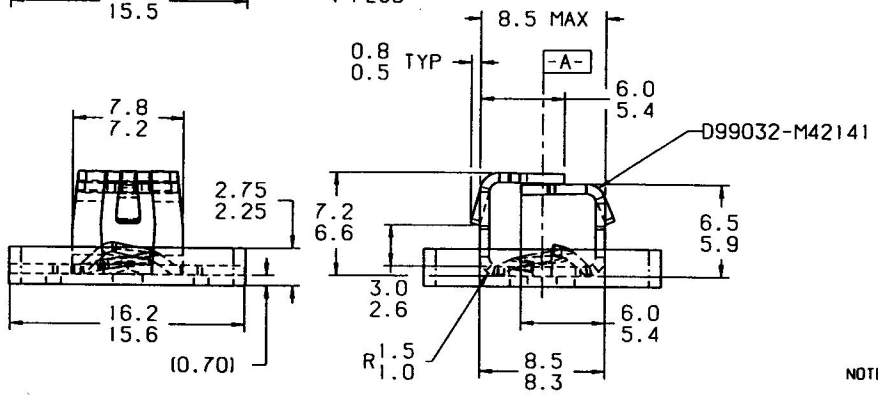

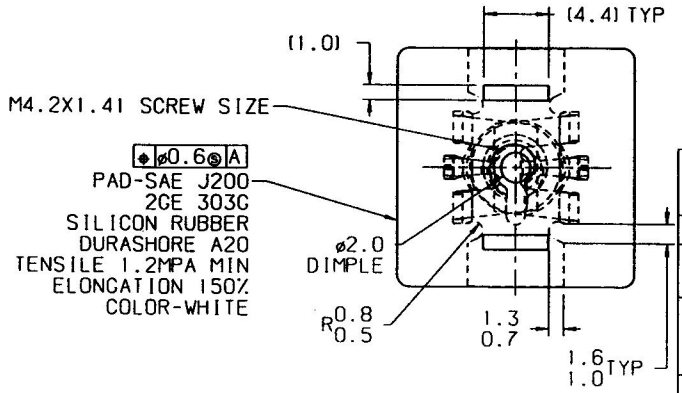

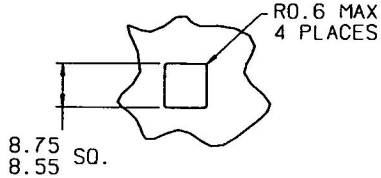

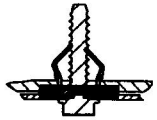

RECOMMENDED HOLE DIMENSION
0.7 - 2.15 PANEL THICKNESS
TYPICAL ASSEMBLY
SCALE 1:1

ACTUAL SIZE

NOTE: "T" IDENTIFICATION TO APPEAR ON FACE OF PART. DIMENSIONING AND TOLERANCING PER ASME Y14.5M.

NOTE: MEAN PUSH-IN FORCE OF TEST SAMPLE (MIN. SAMPLE SIZE OF 20) INTO AN 8.70MM SQUARE HOLE IN MAXIMUM PANEL THICKNESS NOT TO EXCEED 45.0 N (10 lbs).

PERFORMANCE SPECIFICATIONS

PUSH-IN FORCE	SEE NOTE
DESTRUCTION TORQUE USING A BR POINT SCREW (MIN).	3.39 Nm
MAX BREAK THROUGH TORQUE USING A BR POINT SCREW IN AN 8.55mm SQ. HOLE IN A 1.0mm THICK PANEL	1.0 Nm
MIN PUSHOUT (WITHOUT SCREW)	89N
MIN PUSHOUT (WITH SCREW)	900N

REVISIONS

E.C.O.	REV	DESCRIPTION	DATE	DR	CK	APP

CONTROLLED IF RED

NOTICE TO PERSONS RECEIVING THIS DRAWING AND/OR TECHNICAL INFORMATION:
TINNERMAN PALNUT ENGINEERED PRODUCTS CLAIMS PROPRIETARY RIGHTS TO THE MATERIAL DISCLOSED HEREON. THIS DRAWING AND/OR TECHNICAL INFORMATION IS ISSUED IN CONFIDENCE FOR ENGINEERING INFORMATION ONLY AND MAY NOT BE REPRODUCED OR USED TO MANUFACTURE ANYTHING SHOWN OR REFERRED TO HEREON WITHOUT DIRECT WRITTEN PERMISSION FROM TINNERMAN PALNUT ENGINEERED PRODUCTS. THIS DRAWING AND/OR TECHNICAL INFORMATION IS THE PROPERTY OF TINNERMAN PALNUT ENGINEERED PRODUCTS AND IS LOANED FOR MUTUAL ASSISTANCE.

MARK TOOL:

TINNERMAN PALNUT
ENGINEERED PRODUCTS (CANADA) CORPORATION
P.O. Box 2492
Hamilton, Ontario, Canada
L8N 3K1

DRAWN BY	DATE	CHECKED	SCALE	APPROVED
R. FLORES	10/12/04	R. Allen RELEASED 11/01/2004	3:1	H. RATTMANN 1ST. PROD. 11-01-04

REF: 22514-005 / DX8766-M42141

MATERIAL	THICKNESS	HEAT TREAT	FINISH HARDNESS
SAE 1050-1065	0.64	AUSTEMPER	Rc44-51

NAME EXPANSION TYPE

SPECIAL FEATURES: 4.2M BR POINT SCREW

SHEET: 1 OF: 1 | DWG NO D99191-M42141 | SIZE B

REVISED: MAY 31, 2004