DWG NO D99049-M42141 REV A

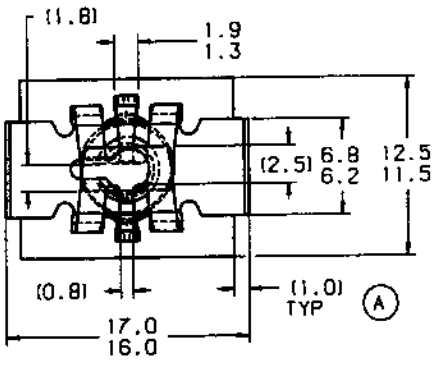

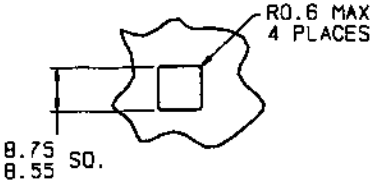

RECOMMENDED HOLE DIMENSION
0.7 - 2.15 PANEL THICKNESS
TYPICAL ASSEMBLY
SCALE 1:1

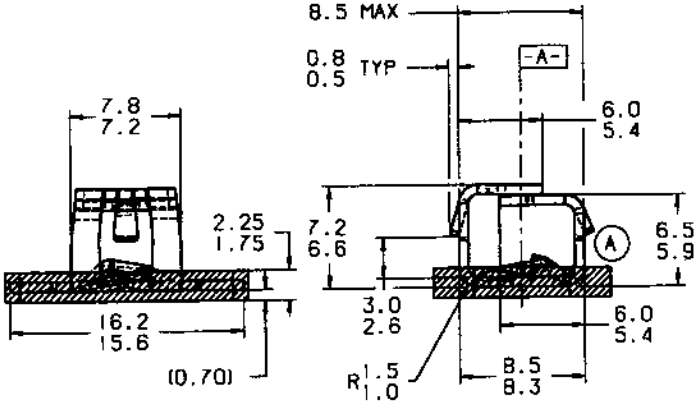

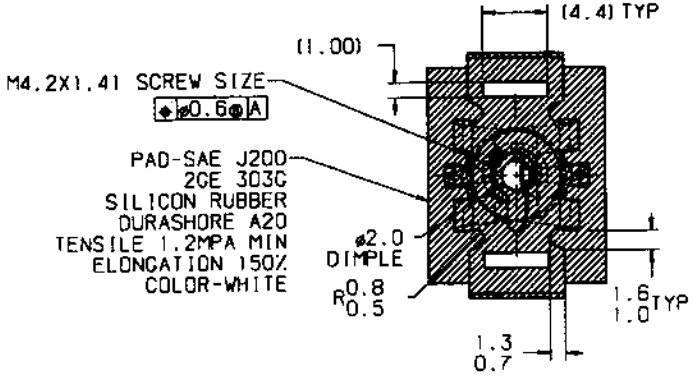

NOTE: "T" IDENTIFICATION TO APPEAR ON FACE OF PART. DIMENSIONING AND TOLERANCING PER ASME Y14.5M.

NOTE: MEAN PUSH-IN FORCE OF TEST SAMPLE (MIN. SAMPLE SIZE OF 20) INTO AN 8.70MM SQUARE HOLE IN MAXIMUM PANEL THICKNESS NOT TO EXCEED 45.0 N (10 lbs).

PERFORMANCE SPECIFICATIONS

PUSH-IN FORCE	SEE NOTE
DESTRUCTION TORQUE USING A BR POINT SCREW (MIN)	3.39 Nm
MAX BREAK THROUGH TORQUE USING A BR POINT SCREW IN AN 8.55mm SQ. HOLE IN A 1.0mm THICK PANEL	1.0 Nm
MIN PUSHOUT (WITHOUT SCREW)	89N
MIN PUSHOUT (WITH SCREW)	900N

REVISIONS

E.C.O	REV	DESCRIPTION	DATE	DR	CK	APP
3148	A	(1.0) TYP WAS 1 TYP	03/28/03	CO	RA	
		PICTORIAL PAD CHANGED				

MARK TOOL:

TINNERMAN PALNUT
ENGINEERED PRODUCTS (CANADA) CORPORATION

P.O. Box 2492
Hamilton, Ontario, Canada
L8N 3K1

DRAWN BY	DATE	CHECKED	SCALE	APPROVED
C. OPREA	03/14/03	R. ALLEN RELEASED 03/21/03	3:1	H. RATTMANN 1ST. PROD. 03/21/03

REF: 022081-001

MATERIAL	THICKNESS	HEAT TREAT	FINISH HARDNESS
SAE 1050-1065	0.64	AUSTEMPER	Rc44-51

NAME: EXPANSION TYPE

PRODUCT CODE #: 900

SPECIAL FEATURES: 4.2M BR POINT SCREW

SHEET: 1 OF: 1

DWG NO D99049-M42141

SIZE B

REVISED: MARCH 08, 2003