DWG NO D99032-M42141 REV C

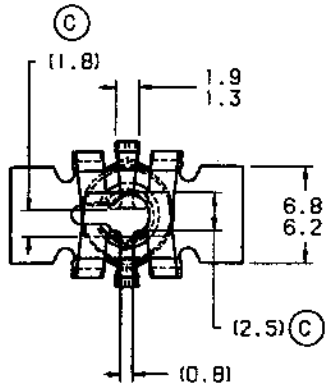

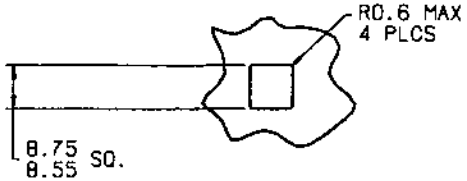

RECOMMENDED HOLE DIMENSION
0.7 - 2.15 PANEL THICKNESS
TYPICAL ASSEMBLY
SCALE 1:1

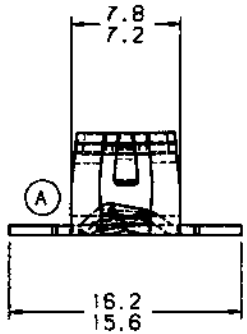

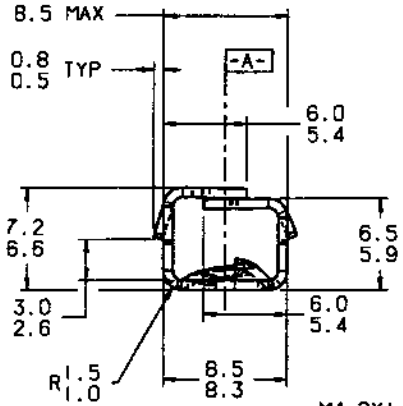

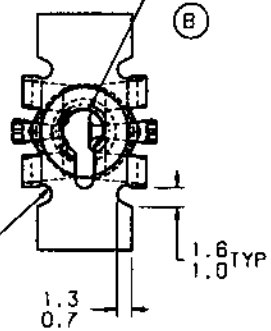

ACTUAL SIZE

C NOTE: "T" IDENTIFICATION TO APPEAR ON FACE OF PART. DIMENSIONING AND TOLERANCING PER ASME Y14.5M.

PERFORMANCE SPECIFICATIONS	
INSTALLATION IN AN 8.70mm SQ. HOLE	TARGET 45.0 N
DESTRUCTION TORQUE USING A BR POINT SCREW (MIN).	3.39 Nm
MAX BREAK THROUGH TORQUE USING A BR POINT SCREW IN AN 8.55mm SQ. HOLE IN A 1.0mm THICK PANEL	1.0 Nm
MIN PUSHOUT (WITHOUT SCREW)	89N C
MIN PUSHOUT (WITH SCREW)	900N C

REVISIONS

E.C.O	REV	DESCRIPTION	DATE	DR	CK	APP
3063	A	PICTORIAL CHANGE TO PART	09/20/02	MV	RR	HR
3065	B	ø0.6 WAS ø0.06	09/23/02	MV	RR	HR
3143	C	(1.8), (2.5) ADDED	02/24/03	MV	RR	HR
		NOTE ADDED				
		89N WAS TBD. 900N WAS TBD				

MARK TOOL:

TINNERMAN PALNUT
ENGINEERED PRODUCTS (CANADA) CORPORATION

P.O. Box 2492
Hamilton, Ontario, Canada
L8N 3K1

DRAWN BY	DATE	CHECKED	SCALE	APPROVED
M. VANDERZWAAG	09/06/02	R. RANKIN RELEASED 09/13/02	3:1	H. RATTMANN 1ST. PROD. 09/13/02

REF: 022081-001

MATERIAL	THICKNESS	HEAT TREAT	FINISH HARDNESS
SAE 1050-1065	0.64	AUSTEMPER	Rc44-51

NAME: EXPANSION TYPE

PRODUCT CODE #: 900

SPECIAL FEATURES: 4.2M BR POINT SCREW

SHEET: 1 OF: 1

DWG NO: D99032-M42141

SIZE: B

REVISED: MARCH 06, 2003