DWG NO D98773-M42141 REV B

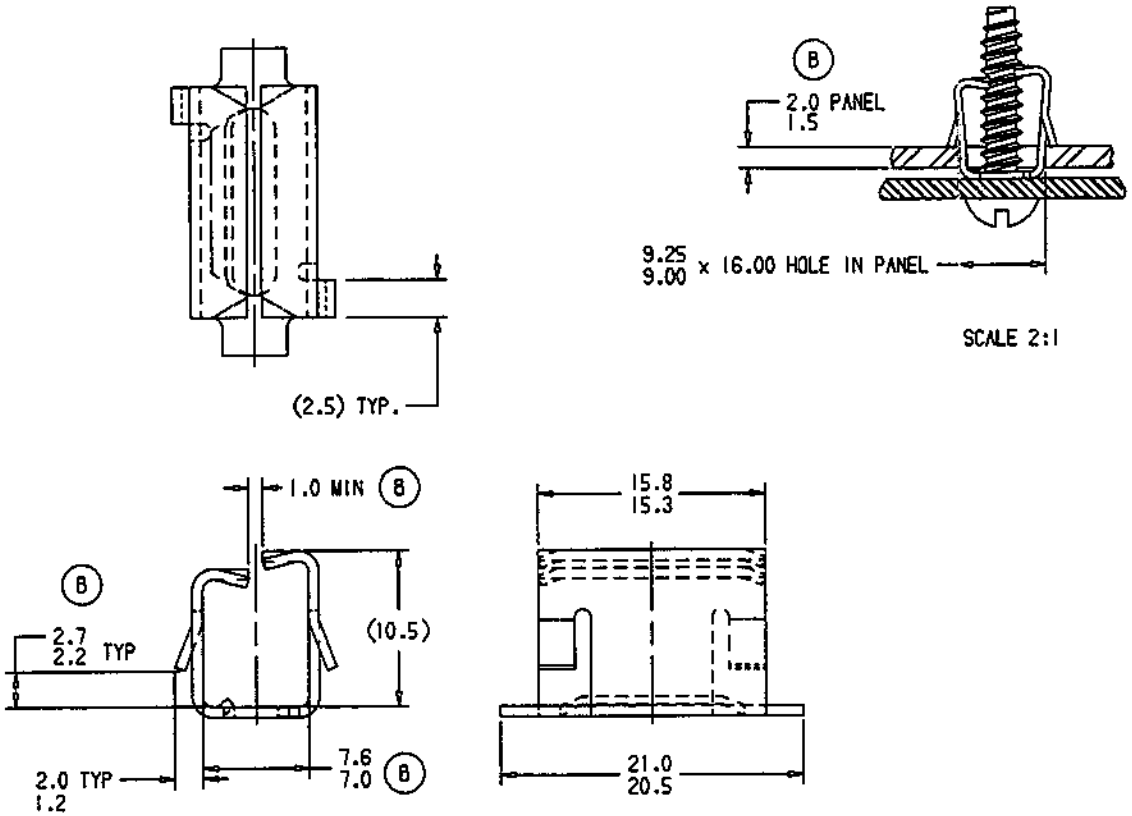


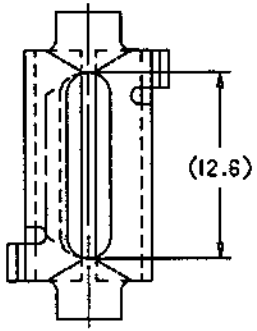


NOTE: "D" IDENTIFICATION TO APPEAR ON FACE OF PART. DIMENSIONING AND TOLERANCING PER ANSI Y14.5M.

**REVISIONS**

| E.C.O | REV | DESCRIPTION | DATE | DR | CK | APP |
|---|---|---|---|---|---|---|
| 1627 | A | REVISE TO AGREE WITH | 11/16/94 | MB | CK | K |
| | | GM15989481A ORIGINALLY | | | | |
| | | C71737-8AB | | | | |
| 1628 | B | REVISE TO ANSI SPECS | | | | |
| | | 2.7/2.2 WAS 2.3/2.0 | | | | |
| | | 7.6/7.0 WAS 7.9/7.4 | | | | |
| | | 1.0 MIN ADDED | | | | |
| | | 1.5/2.0 PANEL WAS 1.8/2.0 PANEL | 11/16/94 | MB | CK | K |

NONCONTROLLED COPY

TINNERMAN PALNUT
ENGINEERED PRODUCTS, LLC

| DRAWN BY | DATE | CHECKED | SCALE | APPROVED |
|---|---|---|---|---|
| M. BASCHIERA | 09/22/94 | R. RANKIN RELEASED 09/22/94 | 3:1 | H. RATTMANN 1ST. PROD. 09/22/94 |

REF

| MATERIAL | THICKNESS | HEAT TREAT | FINISH HARDNESS |
|---|---|---|---|
| SAE 1050-1065 | 0.71 | AUSTEMPER | Rc44-51 |

NAME: EXPANSION TYPE NUT

PRODUCT CODE #: 900

SPECIAL FEATURES: M4.2 x 1.41 (8AB) TAPPING SCREW

SHEET 1 OF 1 | DWG NO D98773-M42141 | SIZE B