DWG NO D98307-10Z REV B

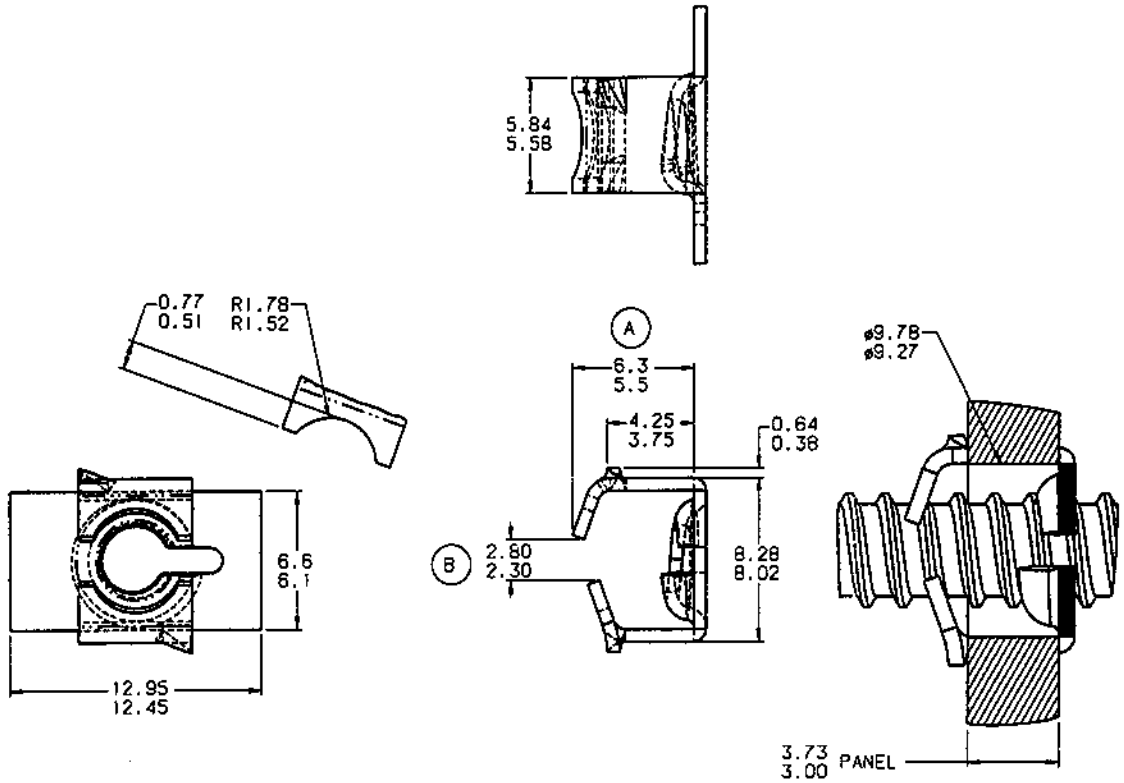

TYPICAL ASSEMBLY

ACTUAL SIZE

B NOTE: "D" IDENTIFICATION TO APPEAR ON FACE OF PART. DIMENSION AND TOLERANCING PER ASME Y14.5M

REVISIONS

E.C.O	REV	DESCRIPTION	DATE	DR	CK	APP
	A	6.3/5.5 WAS 7.2/6.4	02/03/87	SS		
2535	B	REDRAWN IN PRO/E	03/09/00	MV	RL	
		Rc44-51 WAS Rc45-50				
		2.8/2.3 WAS 4.1/3.6				
		SAE 1050-1065 WAS				
		HIGH CARBON SPRING STL				
		NAME: EXPANSION TYPE				

MARK TOOL:

TINNERMAN PALNUT
ENGINEERED PRODUCTS, LLC

DRAWN BY	DATE	CHECKED	SCALE	APPROVED
S.SZOKE	08/26/81	ECR RELEASED	5:1	TST. PROD.

REF:

MATERIAL	THICKNESS	HEAT TREAT	FINISH HARDNESS
SAE 1050-1065	0.64	AUSTEMPER	Rc44-51 (B)

NAME (B) EXPANSION TYPE (B) PRODUCT CODE # (B) 900

SPECIAL FEATURES: 10Z SCREW IMPRESSION

SHEET: 1 OF: 1 DWG NO D98307-10Z SIZE B