DWG NO D98887-071M REV

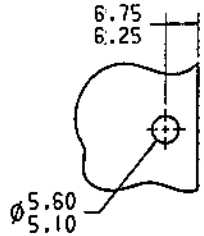

OPTIONAL PANEL
THICKNESS 3.25-2.75
MAT'L: MAGNESIUM
SCALE 1:1

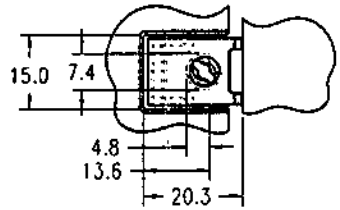

PANEL THICKNESS 3.25-2.75
TYPICAL ASSEMBLY
SCALE 1:1

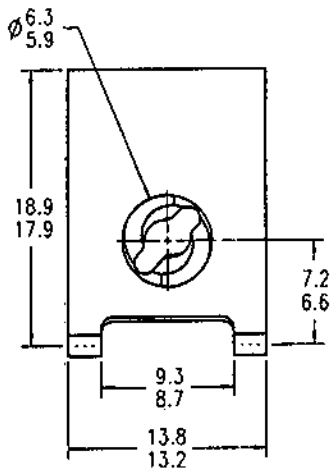

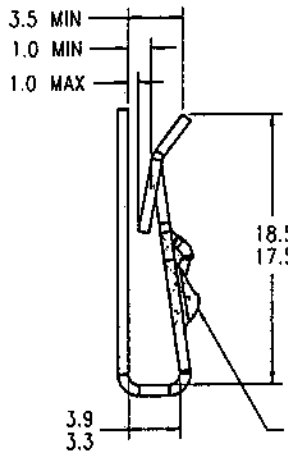

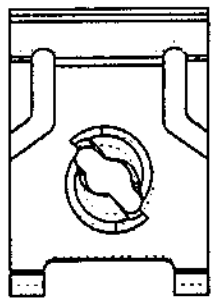

NOTE: "D" IDENTIFICATION TO APPEAR ON FACE OF PART. DIMENSIONING AND TOLERANCING PER ASME Y14.5M.

ACTUAL SIZE

PERFORMANCE SPECIFICATIONS	
MIN. DESTRUCTIVE TORQUE	4.0NM
RECOMMENED INSTALLATION TORQUE	2.9NM

REVISIONS

E.C.O	REV	DESCRIPTION	DATE	DR	CK	APP

MARK TOOL:

TINNERMAN PALNUT
ENGINEERED PRODUCTS, LLC

DRAWN BY	DATE	CHECKED	SCALE	APPROVED
J.TIELEMANS	12/17/97	D. Rankin RELEASED Jan 7/98	3:1	J. Tiemans 1st. PROD. 1-9-98

REF

MATERIAL	THICKNESS	HEAT TREAT	FINISH HARDNESS
SAE 1050-1065	0.71	AUSTEMPER	Rc44-51

NAME	PRODUCT CODE #
U TYPE SPEED NUT	735

SPECIAL FEATURES: M4.2X1.69 DUAL LEAD

SHEET 1 OF 1	DWG NO	SIZE
	D98887-071M	B