DWG NO D98231-8AB REV K

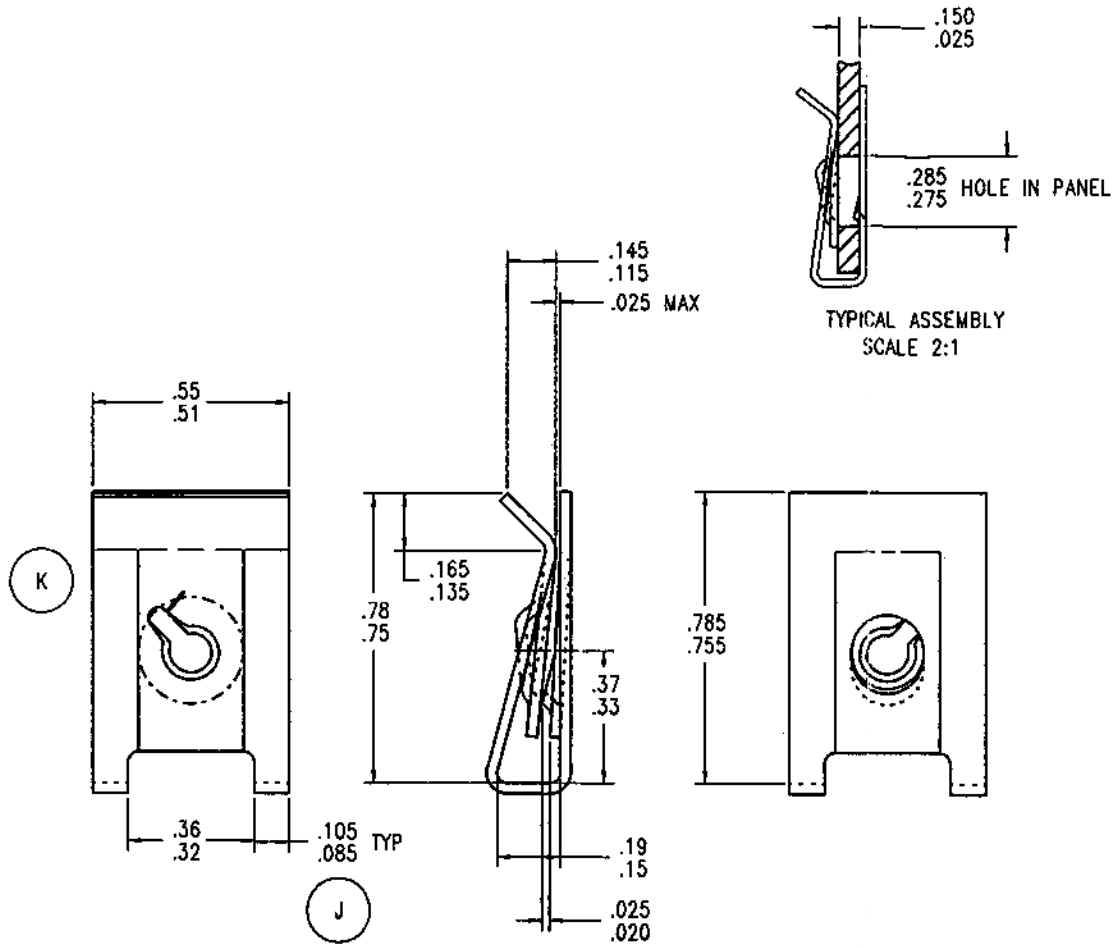

NOTE: ⟐ & "8AB" IDENTIFICATION STAMPS TO APPEAR ON FACE OF PART

ACTUAL SIZE

RECOMMENDED INSTALLATION TORQUE INCH-LB	20
CLAMP FORCE AT REC. INST. TORQUE (MIN) LB	400
DESTRUCTION TORQUE (MIN) INCH-LB	25
TENSILE FAILURE (MIN) LB	500

REVISIONS

E.C.O	REV	DESCRIPTION	DATE	DR	CK	APP
1883	J	REDRAWN ON NEW BORDER	04/03/96	JP	RR	HR
		.085 WAS .85				
2522	K	SHEARLINE ADDED	08/17/99	MV	DB	

TINNERMAN PALNUT
ENGINEERED PRODUCTS, LLC

in 492

DRAWN BY	DATE	CHECKED	SCALE	APPROVED
E. AGOSTINO	05/13/80	E C R RELEASED	3:1	1ST. PROD.

REF

MATERIAL	THICKNESS	HEAT TREAT	FINISH HARDNESS
SAE 1050-1065	.028	AUSTEMPER	Rc45-50

NAME: U TYPE SPEED NUT

PRODUCT CODE #: 735

SPECIAL FEATURES: 8-18 AB TAPPING SCREW

SHEET 1 OF 1

DWG NO D98231-8AB

SIZE B