DWG NO D99349-M5 REV A

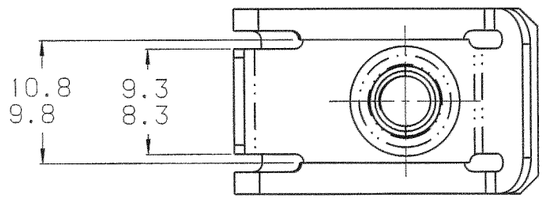

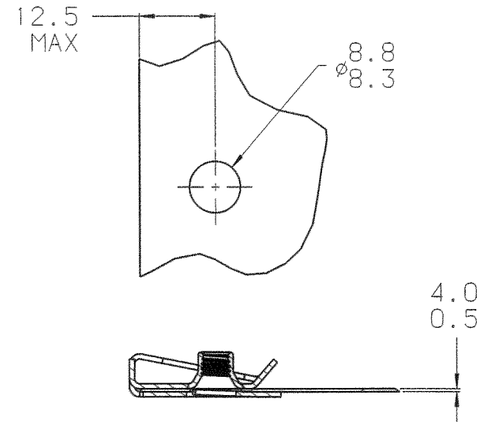

TYPICAL ASSEMBLY
SCALE 1:1

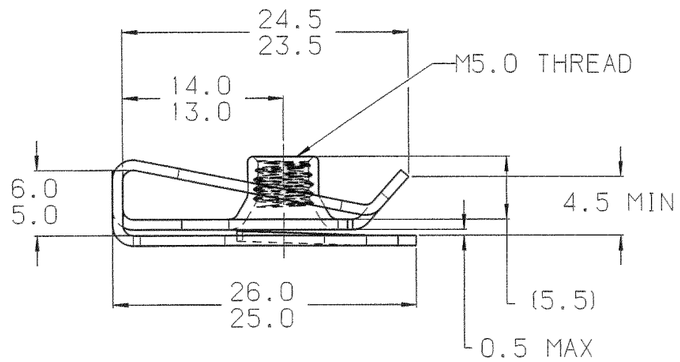

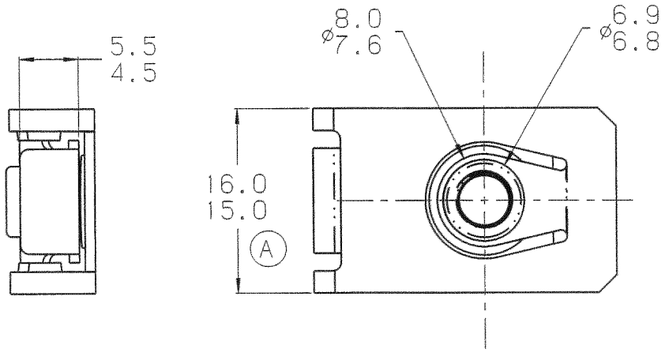

NOTE:
1. MFG IDENTIFICATION TO APPEAR ON FACE OF PART.
2. DIMENSIONING AND TOLERANCING PER ASME Y14.5M.
3. PERFORMANCE SPECIFICATIONS TO BE CONDUCTED AFTER HEAT TREAT & BEFORE FINAL FINISHING

PERFORMANCE SPECIFICATIONS	
PROOF LOAD	14 kN (3150 lb) OVER ø9.1mm (0.358") HOLE USING M5.0 X 0.8 6G SCREW. PROPERTY CLASS 12.9 MIN.
MAX ALLOWABLE BARREL PERMANENT SET	0.35mm (0.014") TESTED AT 9.30kN (2090.7 lbs) USING THE SAME HOLE AND SCREW CRITERIA AS PROOF LOAD

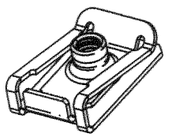

ACTUAL SIZE

REVISIONS

E.C.O.	REV	DESCRIPTION	DATE	DR	CK	APP
4660	A	16.0/15.0 WAS 17.0/15.0	02/05/08	TT	RA	

CONTROLLED IF RED

NOTICE TO PERSONS RECEIVING THIS DRAWING AND/OR TECHNICAL INFORMATION:
TINNERMAN PALNUT ENGINEERED PRODUCTS CLAIMS PROPRIETARY RIGHTS TO THE MATERIAL DISCLOSED HEREON. THIS DRAWING AND/OR TECHNICAL INFORMATION IS ISSUED IN CONFIDENCE FOR ENGINEERING INFORMATION ONLY AND MAY NOT BE REPRODUCED OR USED TO MANUFACTURE ANYTHING SHOWN OR REFERRED TO HEREON WITHOUT DIRECT WRITTEN PERMISSION FROM TINNERMAN PALNUT ENGINEERED PRODUCTS. THIS DRAWING AND/OR TECHNICAL INFORMATION IS THE PROPERTY OF TINNERMAN PALNUT ENGINEERED PRODUCTS AND IS LOANED FOR MUTUAL ASSISTANCE.

MARK TOOL:

TINNERMAN connection engineering
P.O. Box 2492
Hamilton, Ontario, Canada
L8N 3K1

DRAWN BY	DATE	CHECKED	SCALE	APPROVED
T. TRAN	08/27/07	D. HOLODNIUK RELEASED 12/21/07	2:1	M. LUANG-ASA 1ST. PROD. 12/21/07

REF: Q#25321-001, DX9154-M5 - DCX 06105240AA

MATERIAL	THICKNESS	HEAT TREAT	FINISH HARDNESS
SAE 1050-1065	0.86	AUSTEMPER	Rc44-51

NAME "U" NUT

SPECIAL FEATURES: M5.0 TAPPED BARREL

SHEET: 1 OF: 1 | DWG NO D99349-M5 | SIZE B

REVISED: APRIL 25, 2007