DWG
LPGS080025

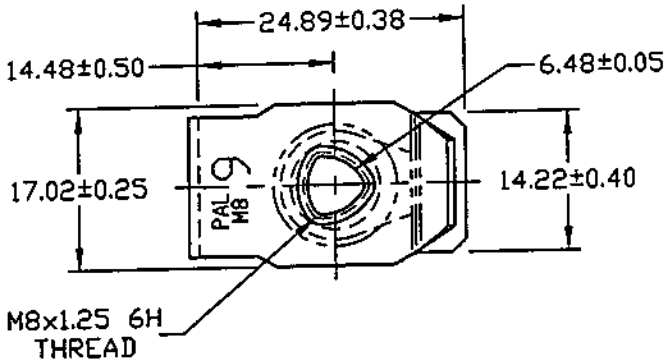

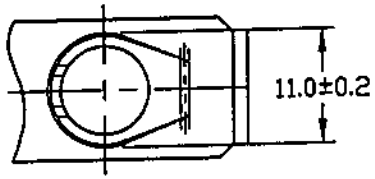

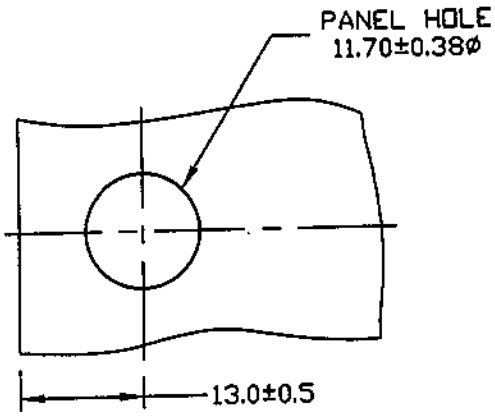

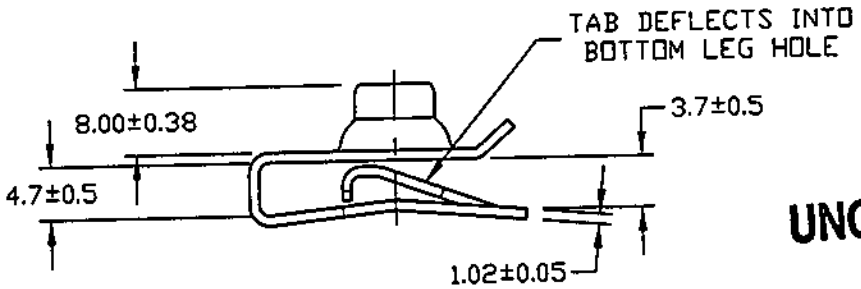

ASSEMBLY

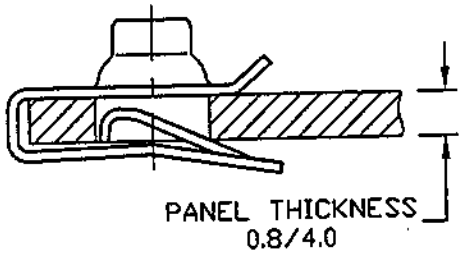

UNCONTROLLED
MAY 1 0 2002

Controlled copy must be in Red

DATE	REV	DESCRIPTION	BY
5/3/01	A	ECO207: THREAD PROPERTY DESIGNATION ADDED TO PARTS LPGS080025 & 085725 AND DRAWINGS ISOLATED FROM 'LPGS-METRIC' DRWG	CNC

TINNERMAN PALNUT
ENGINEERED PRODUCTS, LLC

MATERIAL:
SPRING STEEL-SAE1050

HARDNESS: 30N 61.5 - 68.5

PAL® PALNUT® ON SERT® PUSHNUT®

TITLE
PALNUT, MULTI-THREAD NUTS, "U" TYPE, SHORT CLIP STYLE WITH PREVAILING TORQUE

DRAWN:	C.F.	RELEASED	SCALE
DATE:	3/2/78	PART No: LPGS080025	NONE
CHECKED:	WP 6/28/01	DWG No.	
APPROVED:	6/28/01	LPGS080025	