TYPICAL ASSEMBLY
SCALE: 1:1
VIEW "A"

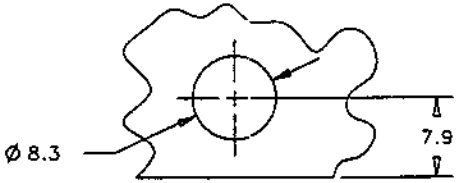

LAYOUT IN 3.8 PANEL
1.8

SCALE 1:1

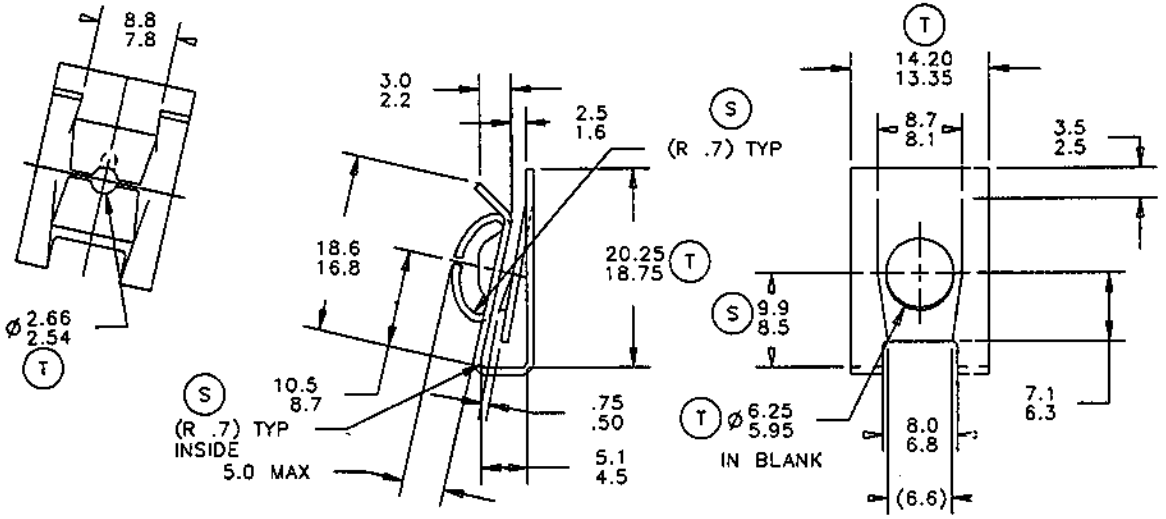

ACTUAL SIZE

NOTE:

1) THE NUT MUST FLEX TO ALLOW THE SURFACE CARRYING THE HELIX IMPRESSION TO LAY FLAT AT ASSEMBLED PANEL, WHEN 12lb.in. OF TORQUE IS APPLIED USING A TEST SCREW AS CALLED OUT IN TORQUE SPECIFICATIONS. SEE VIEW "A"

PERFORMANCE SPECIFICATIONS:
-MAX. PREVAILING TORQUE 1ST ON ....0.5Nm(4.4lb-in)
-MIN. PREVAILING TORQUE 1ST OFF AFTER TIGHTENING SCREW TO 1.8Nm.....0.11Nm(0.97lb-in)
-MIN. PREVAILING TORQUE 5TH OFF....0.11Nm
-MIN. DESTRUCTIVE TORQUE .....4.8Nm(42.1lb-n)
-RECOMMENDED INSTALLATION TORQUE...2.6Nm(20lb-in)

(R)

NOTE: "D" IDENTIFICATION TO APPEAR ON FACE OF PART.
DIMENSIONING AND TOLERANCING PER ANSI Y14.5M.

REVISIONS

E. C. O	REV	DESCRIPTION	DATE	DR	CK	APP
1667	Q	5.0 MAX ADDED	01/25/95	JL	RR	HR
		Rc 44-51 WAS Rc 45-50				
		REMOVE GM FINISH 4435M				
		CODE B				
1679	R	PERFORMANCE SPECS UPDATED	02/21/95	JL	RR	HR
1764	S	REDRAWN TO ADD DIM'S	07/17/95	JP	RR	HR
		OMITTED ON REV "Q"				
		(0.7) R TYP ADDED				
		(0.7) R INSIDE TYP ADDED				
		9.9/8.5 ADDED				
		TYPICAL ASSEMBLY VIEW				
		REVISED				
1833	T	18.75/20.25 WAS 18.8/20.3	12/15/95	AB	RR	HR
		13.35/14.20 WAS 13.4/14.2				
		Ø 5.95/6.25 IN BLANK WAS Ø 6.0/6.3 IN BLANK				
		Ø 2.54/2.66 WAS Ø 2.5/2.7				

NONCONTROLLED COPY

TINNERMAN PALNUT
ENGINEERED PRODUCTS, LLC

DRAWN BY	DATE	CHECKED	SCALE	APPROVED
S. SZOKE	03/22/83	JG RELEASED 01/21/88	2:1	1ST. PROD.

REF

MATERIAL	THICKNESS	HEAT TREAT	FINISH HARDNESS
SAE 1050-1065	0.71	AUSTEMPER	Rc44-51

NAME: U TYPE SPEED NUT

PRODUCT CODE #: 735

SPECIAL FEATURES: M4.2 x 1.41 (8AB + 8B) TAPPING SCREW

SHEET 1 OF 1

DWG NO: D98317-071M

SIZE: B