Stepper gearmotor
Data sheet

82 924 038
ratio 80

Series
829240

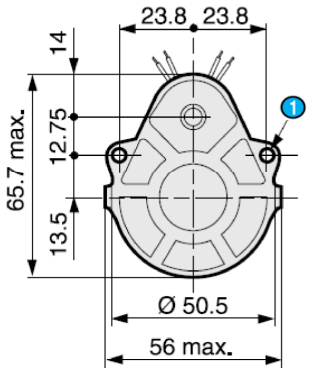

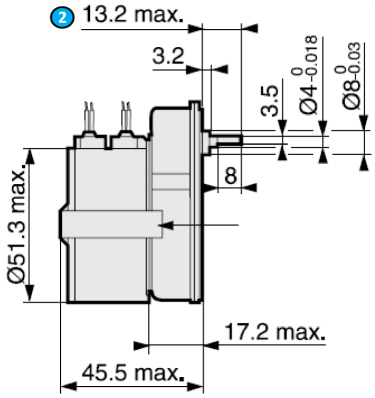

1 Hole diam. 3.2mm

2 Pushed shaft

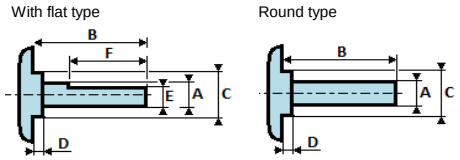

Shaft ref.	Standard
Type	With flat type
ϕA	4 -0,018 +0
2 B	13,2 max
ϕC	8 -0,03 +0
D	3,2
E	3,5 -0,2 +0
F	8
ϕG	
H	

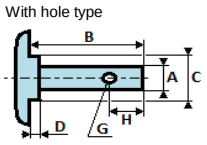

Product

Code	82 924 038
Family	82924
Type	Stepper gearmotor
Definition	Motor 82920 1,7W 500 rpm nominal 7,5 °/t 48 step/t + Gearbox Ovoide ratio 80 2 phases 10,7 Ohms/phase

General characteristics

Motor characteristics (1)		
Motor type	**829200**	
Number of phases		2
Input power	W	7,5
Phase resistor	Ohm	10,7
Phase inductance	Mh	24
Phase current	A	0,59
Maintain torque	mNm	70
Voltage per phase	Vcc	6,3
Step angle	deg	7,5
Step precision	%	5
Rotor inertia	g.cm²	18,8
Max. detent torque	mNm	6
Weight	g	210
Output leads		
UL style 1569 105°C 300V - 4 leads AWG24		250 mm +- 10

Gearmotor characteristics (1) (2)		A	B	C	D
Additional resistor /phase	Ohm	0	10,7	21,4	32,1
Voltage (phase + add. resistor)	Vcc	6,3	12,6	18,9	25,2
Max. output power	W	0,51	0,88	1,18	1,48
Speed at max. output power	rpm	2,7	3,9	4,7	5,9
Torque at max. output power	Nm	1,78	2,23	2,40	2,42
Max. current	A	0,59			
Weight	g	140			
Noise level	dBA	35			
Motor fixing on gearbox		✓ Clip		Screws	
Miscelaneous					
Dielectric (1s/2mA/50Hz)	CEI60335		Vac	600	
Motor insulation	CEI60085		class	B	
Degree of protection	CEI60529		IP	40	
Temperature range	CEI60068-2-1/2		°C	-30 -> +70	
Storage temperature			°C	-40 -> +80	
Approvals					
ROHS	2011/65/UE		✓		
EC	2014/30/UE		✓		

Notes
Values without tolerance, are average production values.
(1) Cold motor, 20 ° C ambient temperature, full speed
(2) Without taking in count the torque gearbox limts, check gearbox characteristics
(3) Continuously rated torque, zero radial and axial loads
(4) Max torque for continuous operation at 20 ° C, decrease this value for higher ambient temperature

Command sequence

Drive sequence for Clock Wise rotation

Step	1	2	3	4
1	-	+	-	+
2	-	+	+	-
3	+	-	+	-
4	+	-	-	+
5	-	+	-	+

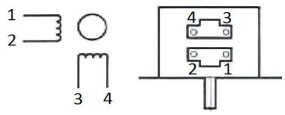

Gearbox Charateristics		
Type	**Ovoide**	**81021**
ratio		80
Shaft		standard
Front bearing		Brass
Continuous max. torque	Nm	0,5
Max. Radial force (6mm from front face)	N	80
Max. axial force (5)	N	10
Weight	g	275

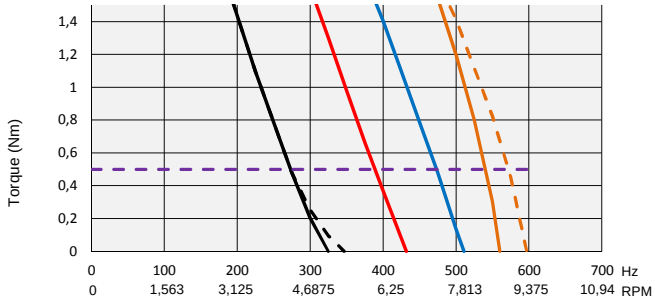

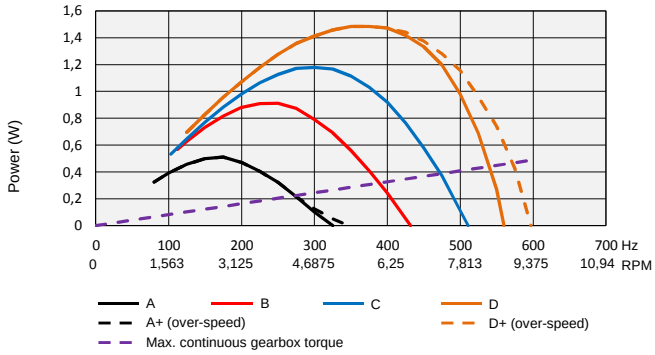

Specifications subject to change without notice. Updated 15/09/2016

Crouzet Automatismes
12, rue Jean Jullien-Davin
26902 Valence CEDEX 9 France

www.crouzet-motors.com