CITY OF STOUGHTON
DEPARTMENT OF
PLANNING & DEVELOPMENT
207 S Forrest Street, Stoughton, WI. 53589

(608) 873-6619 www.ci.stoughton.wi.us

RODNEY J. SCHEEL
DIRECTOR

Date: May 3, 2022

To: Plan Commissioners

From: Rodney J. Scheel
Director of Planning & Development

Michael P. Stacey
Zoning Administrator/Assistant Planner

Subject: Agenda Item for the May 9, 2022 Plan Commission Meeting

Specific Implementation Plan for Popeye's Restaurant at 2440 State Highway 138.
Kevin Yeska of JSD Professional Services seeks approval of a specific implementation plan to construct a building for Popeye's Restaurant with drive-thru at 2440 State Highway 138. In light of past issues with other drive-thru establishments, we believe the applicant has provided a good plan to address the drive-thru demand, proposing a 2 lane drive-thru. Only Plan Commission approval is necessary. The resolution, staff review and related documents are provided.

CITY OF STOUGHTON, 207 S. FORREST STREET, STOUGHTON, WISCONSIN

RESOLUTION OF THE PLAN COMMISSION

Approving a Planned Development - Specific Implementation Plan (SIP) for Popeye's Restaurant at 2440 State Highway 138, Stoughton, WI.

Committee Action: Plan Commission approves the request - 0

Fiscal Impact:

File Number:	R - 11 - 2022	**Date Introduced:**	May 9, 2022

RECITALS

A. Kevin Yeska (the "Applicant") is seeking SIP approval for Popeye's Restaurant at 2440 State Highway 138, Stoughton, Dane County, Wisconsin (the "Property").

B. The Property is zoned Planned Development - General Development Plan (GDP) as approved by the City Common Council on July 11, 2017.

C. The Property has an underlying zoning of PB – Planned Business which is consistent with the Comprehensive Plan – Future Land Use Map.

D. This SIP approval is based on letter of intent dated May 4, 2022; plans dated May 3, 2022 – (sheets C-1.0, C1.1, C-2.0, C-3.0, C-4.0, C-4.1, C4.2, L1.0, L2.0); architectural plans dated Feb 23, 2022 – (sheets A3.3, A2.1, A3.1, A3.2); and photometric plan dated 4/19/22.

E. The City Plan Commission reviewed and discussed the proposed SIP at their regular May 9, 2022 meeting and agreed the plan meets the intent of the General Development Plan, zoning ordinance and Comprehensive Plan.

RESOLUTION

BE IT RESOLVED, the City of Stoughton Plan Commission approves the SIP for Popeye's Restaurant at 2440 State Highway 138, Stoughton, WI, as presented.

_____

Mayor Tim Swadley Date
Plan Commission Chair

Madison Regional Office
161 Horizon Drive, Suite 101
Verona, WI 53593
608.848.5060

Apr l 25, 2022
Revised May 4, 2022

Mr. M chael Stacey
Zon ng A n strator
C ty o Stoughton Plann ng D s on

Sub ect **Kettle Park West Lot 7-1 Popeye's Restaurant**
Letter of Intent – Site Plan Review
2440 State Highway 138
Stoughton, WI 53589
JSD Project No. 22-11344

Mr. M chael Stacey,

The ollow ng s sub tte n con unct on w th the plans an appl cat on ater als or S te Plan Re ew an appro al.

Organizational structure:

Owner: AARM Group Inc.
8605 W. Bryn Mawr A e #309A
Ch cago, IL 60631
a yn.al @aar group.co

Architect: Gleason Arch tects
769 N. Heartlan Dr e Un t A
Sugar Gro e, IL 60554
ane uncan@gleasonarch tectspc.co

Civil/ Landscape: JSD Pro ess onal Ser ces, Inc.
161 Hor on Dr e, Su te 101
Verona, WI 53593
Attn: ke n.yeska@ s nc.co

On behal o AARM Group Inc., JSD Pro ess onal Ser ces, Inc. (JSD) s sub tt ng the ollow ng pro ect su ary e oran u an Spec c l ple entat on Plan ater als or the abo e-re erence pro ect or your re ew an cons erat on or the May 9, 2021, Plan Co ss on eet ng.

PROJECT SITE LOCATION AND BACKGROUND

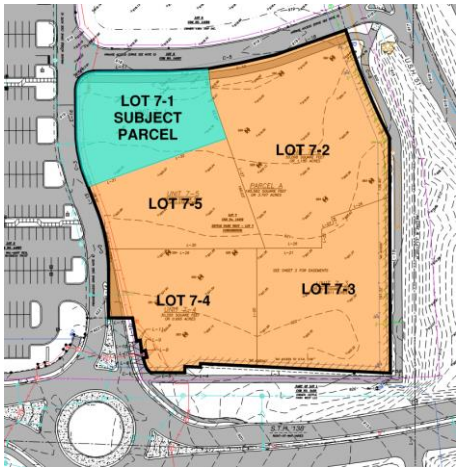

Lot 7-1 s generally locate at the northwest corner o the or ally known Lot 7 at Kettle Park West. The pro ect s te s part o the Kettle Park West General De elop ent Plan. The sub ect parcel s currently a acant el w th an ex st ng ult -use path, tree terrace an access r e to the north as well as a s ewalk, tree terrace an pr ate r e (Kettle Park Way) to the west. A t onal surroun ng parcels nclu e Lot 7-2, 7-3, 7-4 an 7-5, all o wh ch share park ng as a co on ele ent across the ent rety o the or er Lot 7. To ay, Lot 7-2's 11,880 SF n-l ne reta l bu l ng s occup e by tenants nclu ng Pancake Ca , T&T Na ls, AT&T, Century 21 an Great Cl ps. The 4,122 SF bu l ng at Lot 7-4 s occup e by Dunk n Donuts an Shopko Opt cal. The owner an e elop ent tea are exc te to ers y the reta l o er ngs to the general publ c an C ty o Stoughton by br ng ng orwar a oo ser ce use not yet o ere at Kettle Park West.

DEVELOPMENT PROPOSAL OVERVIEW

Site Design and Access

The propose 2,526 SF Popeye's restaurant will be accessed from one of two driveways o Kettle Park Way. A total o 11 park ng stalls w ll surroun the one-way ouble r e-thru lanes, whereas or er boar s w ll be locate west o the bu l ng. An auto-turn analys s was con ucte to ensure that large- or at eh cles woul be able to access an tra erse the s te success ully. The ast a or ty of Popeye's parking is adjacent to the main entrance o the bu l ng along the western a a e, whereas a t onal o -s te park ng to the south w ll han le any o er low ur ng peak hours. M n u setback stan ar s outl ne n Table 4 o the KPWCC Planne De elop ent General De elop ent Plan O-7-2017 co ply.

A lan use su ary o the propose s te e elop ent s pro e .

Hours of Operation and Employees

The bu l ng w ll operate ro 10a to 10p on the week ays an 10a to 11p on the weeken s. The ac l ty w ll h re approx ately 20 e ployees w th approx ately 8 workers expecte at peak weeken hours.

SITE INFORMATION BLOCK	
SITE ADDRESS	2440 STATE HIGHWAY 138
PROPERTY ACREAGE	0.563 ACRES
NUMBER OF BUILDING STORIES	1
TOTAL BUILDING SQUARE FOOTAGE	~~2,526~~
TOTAL INTERIOR SEATING	20
NUMBER OF PARKING STALLS	
SURFACE	
LARGE	10
ACCESSIBLE	1
TOTAL SURFACE	11
NUMBER OF BICYCLE STALLS:	4
EXISTING VS. PROPOSED SITE COVERAGE	
EXISTING IMPERVIOUS SURFACE AREA	4,888 SF
EXISTING PERVIOUS SURFACE AREA	19,620 SF
EXISTING IMPERVIOUS SURFACE AREA RATIO	0.20
PROPOSED IMPERVIOUS SURFACE AREA	18,774 SF
PROPOSED PERVIOUS SURFACE AREA	5,734 SF
PROPOSED IMPERVIOUS SURFACE AREA RATIO	0.77

Architecture Materials and Site Lighting

The exter or o the bu l ng cons sts o N ch ha V ntage Br ck color: ntage wh te wash an N ch ha V ntage Br ck color: Alexan r a Bu . The ert cal woo s ng s N ch ha V ntage Woo color: Ce ar. In a t on to the br ck an woo a a e, EIFS an black alu nu store ront s propose . Internally llu nate s gnage an wall sconces w ll l ght the pe estr an walks, wh le LED park ng lot l ghts are pro e to llu nate the park ng areas an accent bu l ng arch tecture. All l ght xtures w ll be ark sk es co pl ant an ull cuto cons stent w th the City of Stoughton's lighting ordinance. The u pster enclosure s CMU block pa nte to atch the bu l ng.

Site Landscaping

The ntent o the propose s te lan scape pro e ents s to ut l e a apt e nat e plant spec es to pro e year-roun texture an ol age. The es gn goals nclu e pro ng a cons stent streetscape along the pr ate r es, as well as pro ng screen ng o park ng, re use an r e-thru areas, an accent ng bu l ng arch tecture.

Site Monument Sign

A s te onu ent s gn w ll be locate at the corner o Kettle Park Way an the access r e to the north. The prel nary ootpr nt has been locate to a o s on clearance ssues. F nal eta ls an es gn w lls be eter ne at a later ate.

ANTICIPATED PROJECT SCHEDULE

Pursuant to C ty appro als an per t procure ent, s te preparat on an s te construct on (gra ng, base, etc.) s ant c pate to co ence n July o 2021. Upon co plet on o the s te work, construct on w ll then co ence on the building itself. The building's construction is anticipated to span approx ately s x onths an s targete or co plet on by February o 2023.
Thank you or your t e an cons erat on o th s pro ect.

S ncerely,

JSD Professional Services, Inc.

Ke n Yeska, PLA, ASLA
Pro ect Consultant / Lan scape Arch tect

KETTLE PARK WEST LOT 7

STOUGHTON, WI **05.03.2022**

CONTEXT PHOTOS

JSD

1 A3.3 FRONT ELEVATION - DAY
SCALE: N.T.S.

2 A3.3 SIDE ELEVATION - 1
SCALE: N.T.S.

3 A3.3 SIDE ELEVATION - 2
SCALE: N.T.S.

4 A3.3 FRONT ELEVATION - NIGHT
SCALE: N.T.S.

GLEASON
ARCHITECTS, P.C.
769 Heartland Drive, Unit A
Sugar Grove, Illinois 60554
Phone: 630-466-8740
Fax: 630-466-8760
E-mail: thadgleason@gleasonarchitectspc.com

THESE DRAWINGS, INCLUDING ALL DESIGNS, DETAILS, SPECIFICATIONS AND INFORMATION, ARE THE SOLE PROPERTY AND COPYRIGHT OF GLEASON ARCHITECTS, P.C. AND ARE FOR USE ON THIS SPECIFIC PROJECT AND SHALL NOT BE USED ON ANY OTHER WORK WITHOUT THE AGREEMENT AND WRITTEN PERMISSION OF GLEASON ARCHITECTS, P.C.

ISSUED	DATE
FOR APPROVAL	
FOR PERMIT	12/17/13
FOR BID	
FOR CONST.	

REVISIONS	DATE
1	
2	
3	

PROJECT:
Popeyes LK
Lot 7-1 Kettle Park
Stoughton, WI

CLIENT:
Ryan Matthews

JOB NO.
DATE 02/23/2022
FILE
PLOT SCALE 1:1

OWNER APPROVAL

Signature

Date

SHEET TITLE
COLOR
EXTERIOR ELEVATIONS
FRONT & 2 SIDES

SHEET NUMBER
A3.3

JSD

CREATE THE VISION TELL THE STORY

jsdinc.com

MADISON REGIONAL OFFICE
161 HORIZON DRIVE, SUITE 101
VERONA, WISCONSIN 53593
P. 608.848.5060

CLIENT:
AARM GROUP
STOUGHTON PROPERTIES LLC

CLIENT ADDRESS:
8605 W BRYN MOWN AVE, SUITE 309A
CHICAGO, IL 60631

PRELIMINARY NOT FOR CONSTRUCTION

PROJECT:
POPEYES RESTAURANT

PROJECT LOCATION:
LOT 7-1 KETTLE PARK WEST
STOUGHTON, DANE COUNTY
WI 53589

PLAN MODIFICATIONS:

#	Date:	Description:
1	04.25.22	SIP SUBMITTAL
2	05.03.22	RESPONSE TO COMMENTS
3		
4		
5		
6		
7		
8		
9		
10		
11		
12		
13		
14		
15		

Designed By: MSS
Reviewed By: MRH
Approved By: MRH

SHEET TITLE:
LOT 7 OVERALL
SITE PLAN

SHEET NUMBER:
C1.0

JSD PROJECT NO: 22-11344

THESE PLANS AND DESIGNS ARE COPYRIGHT PROTECTED AND MAY NOT BE USED IN WHOLE OR IN PART WITHOUT THE WRITTEN CONSENT OF JSD PROFESSIONAL SERVICES, INC.

File: I:\2022\221344\DWG\Civil Sheets\221344 Con Docs - Site.dwg Layout: C1.0 Lot 7 User: jwebb Plotted: May 03, 2022 - 10:46am XrefS:

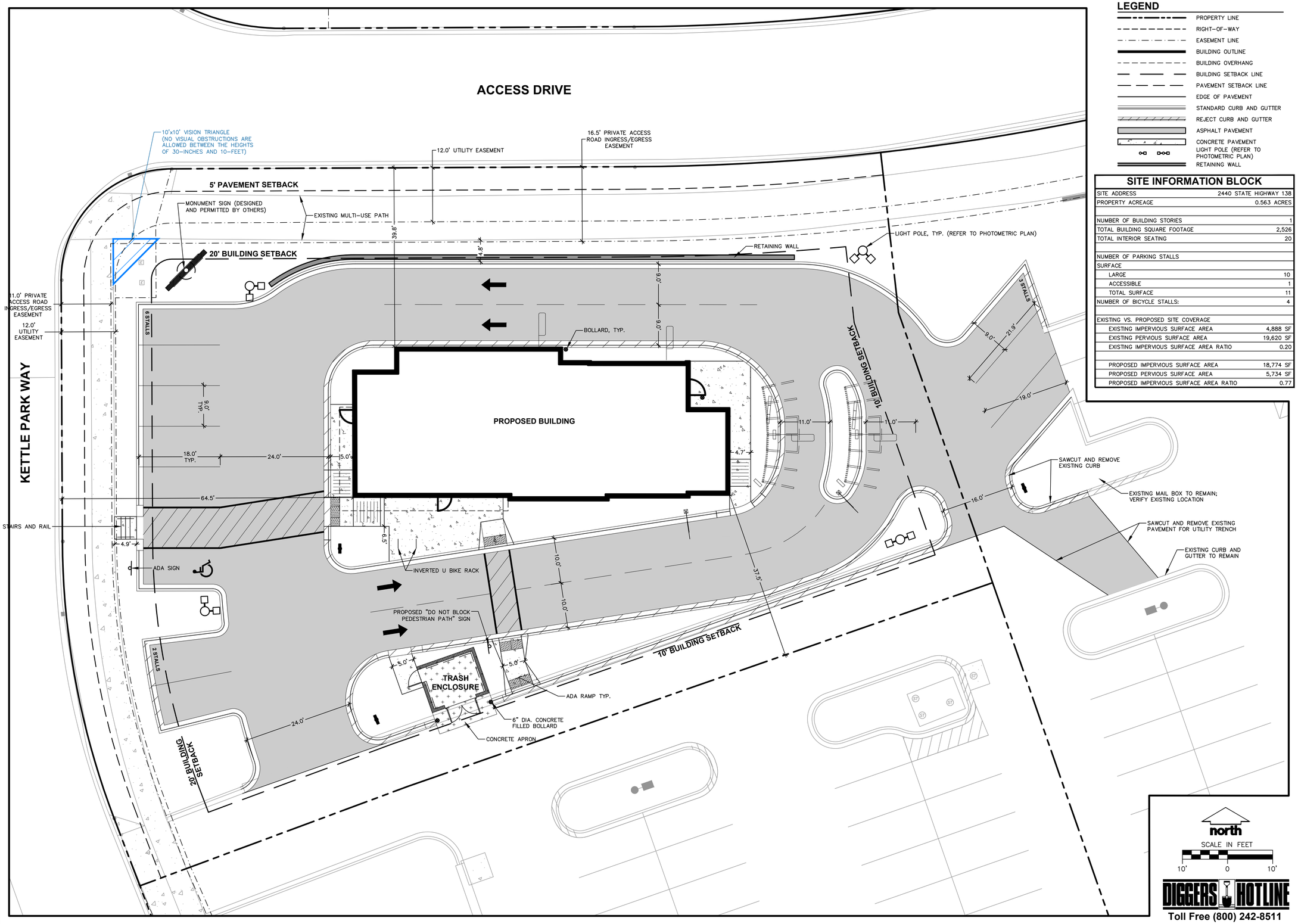

LEGEND

- PROPERTY LINE
- RIGHT-OF-WAY
- EASEMENT LINE
- BUILDING OUTLINE
- BUILDING OVERHANG
- BUILDING SETBACK LINE
- PAVEMENT SETBACK LINE
- EDGE OF PAVEMENT
- STANDARD CURB AND GUTTER
- REJECT CURB AND GUTTER
- ASPHALT PAVEMENT
- CONCRETE PAVEMENT
- LIGHT POLE (REFER TO PHOTOMETRIC PLAN)
- RETAINING WALL

SITE INFORMATION BLOCK

SITE ADDRESS	2440 STATE HIGHWAY 138
PROPERTY ACREAGE	0.563 ACRES
NUMBER OF BUILDING STORIES	1
TOTAL BUILDING SQUARE FOOTAGE	2,526
TOTAL INTERIOR SEATING	20
NUMBER OF PARKING STALLS	
SURFACE	
LARGE	10
ACCESSIBLE	1
TOTAL SURFACE	11
NUMBER OF BICYCLE STALLS:	4
EXISTING VS. PROPOSED SITE COVERAGE	
EXISTING IMPERVIOUS SURFACE AREA	4,888 SF
EXISTING PERVIOUS SURFACE AREA	19,620 SF
EXISTING IMPERVIOUS SURFACE AREA RATIO	0.20
PROPOSED IMPERVIOUS SURFACE AREA	18,774 SF
PROPOSED PERVIOUS SURFACE AREA	5,734 SF
PROPOSED IMPERVIOUS SURFACE AREA RATIO	0.77

JSD
CREATE THE VISION TELL THE STORY
jsdinc.com
MADISON REGIONAL OFFICE
161 HORIZON DRIVE, SUITE 101
VERONA, WISCONSIN 53593
P. 608.848.5060

CLIENT:
AARM GROUP STOUGHTON PROPERTIES LLC

CLIENT ADDRESS:
8605 W BRYN MOWN AVE, SUITE 309A CHICAGO, IL 60631

PRELIMINARY NOT FOR CONSTRUCTION

PROJECT:
POPEYES RESTAURANT

PROJECT LOCATION:
LOT 7-1 KETTLE PARK WEST STOUGHTON, DANE COUNTY WI 53589

PLAN MODIFICATIONS:

#	Date:	Description:
1	04.25.22	SIP SUBMITTAL
2	05.03.22	RESPONSE TO COMMENTS
3		
4		
5		
6		
7		
8		
9		
10		
11		
12		
13		
14		
15		

Designed By:	MSS
Reviewed By:	MRH
Approved By:	MRH

SHEET TITLE:
SITE PLAN

SHEET NUMBER:
C1.1

JSD PROJECT NO: 22-11344

THESE PLANS AND DESIGNS ARE COPYRIGHT PROTECTED AND MAY NOT BE USED IN WHOLE OR IN PART WITHOUT THE WRITTEN CONSENT OF JSD PROFESSIONAL SERVICES, INC.

File: I:\2022\221344\DWG\Civil Sheets\221344 Con Docs - Site.dwg Layout: C1.1 Site User: jwebb Plotted: May 03, 2022 - 10:45am Xref's:

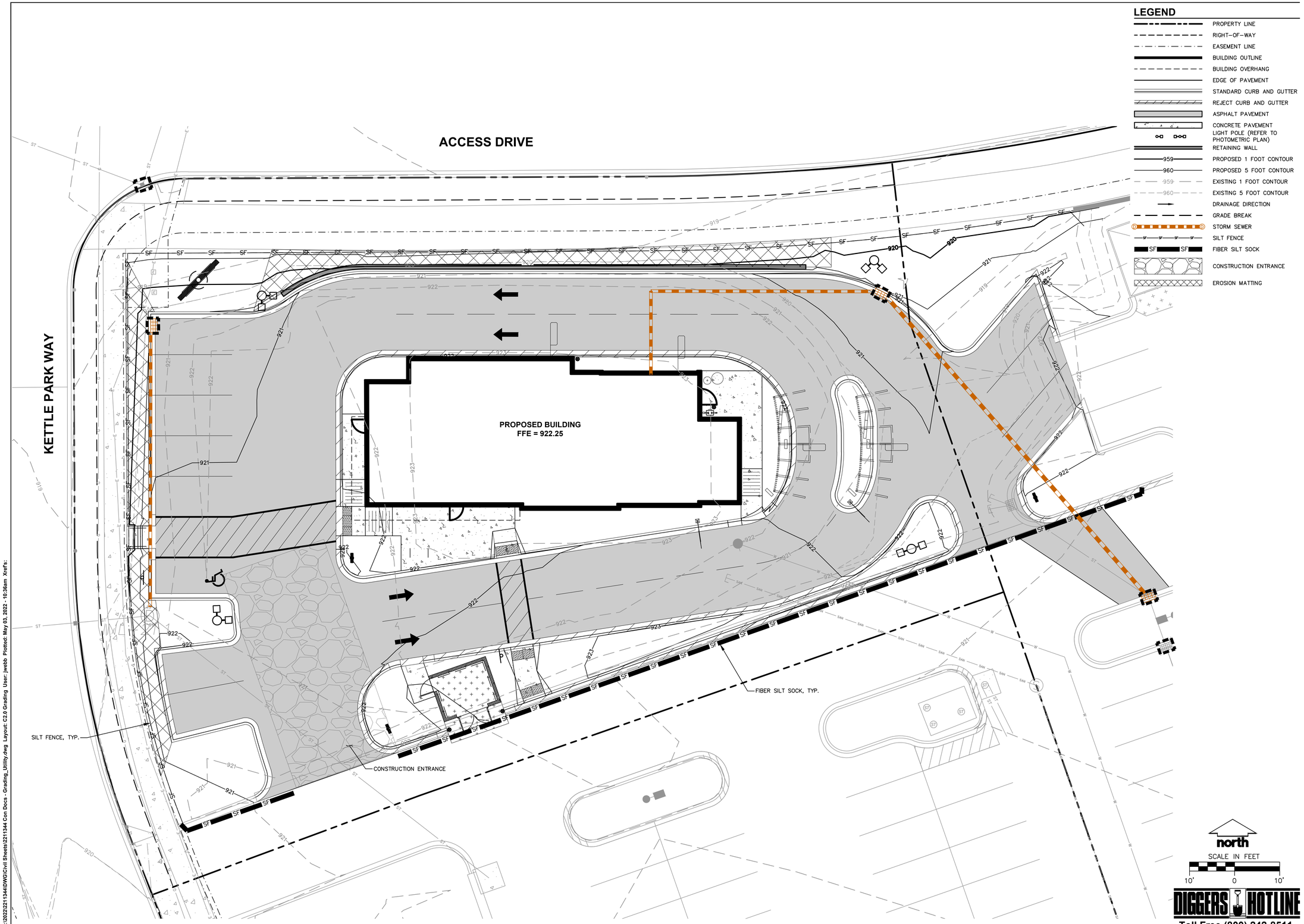

File: I:\2022\221344\DWG\Civil Sheets\221344 Con Docs - Grading_Utility.dwg Layout: C2.0 Grading User: jwebb Plotted: May 03, 2022 - 10:36am Xref's:

JSD

CREATE THE VISION TELL THE STORY

jsdinc.com

MADISON REGIONAL OFFICE
161 HORIZON DRIVE, SUITE 101
VERONA, WISCONSIN 53593
P. 608.848.5060

CLIENT:
AARM GROUP STOUGHTON PROPERTIES LLC

CLIENT ADDRESS:
8605 W BRYN MOWN AVE, SUITE 309A CHICAGO, IL 60631

PRELIMINARY NOT FOR CONSTRUCTION

PROJECT:
POPEYES RESTAURANT

PROJECT LOCATION:
LOT 7-1 KETTLE PARK WEST STOUGHTON, DANE COUNTY WI 53589

PLAN MODIFICATIONS:

#	Date:	Description:
1	04.25.22	SIP SUBMITTAL
2	05.03.22	RESPONSE TO COMMENTS
3		
4		
5		
6		
7		
8		
9		
10		
11		
12		
13		
14		
15		

Designed By:	MSS
Reviewed By:	MRH
Approved By:	MRH

SHEET TITLE:
GRADING & EROSION CONTROL PLAN

SHEET NUMBER:
C2.0

JSD PROJECT NO: 22-11344

THESE PLANS AND DESIGNS ARE COPYRIGHT PROTECTED AND MAY NOT BE USED IN WHOLE OR IN PART WITHOUT THE WRITTEN CONSENT OF JSD PROFESSIONAL SERVICES, INC.

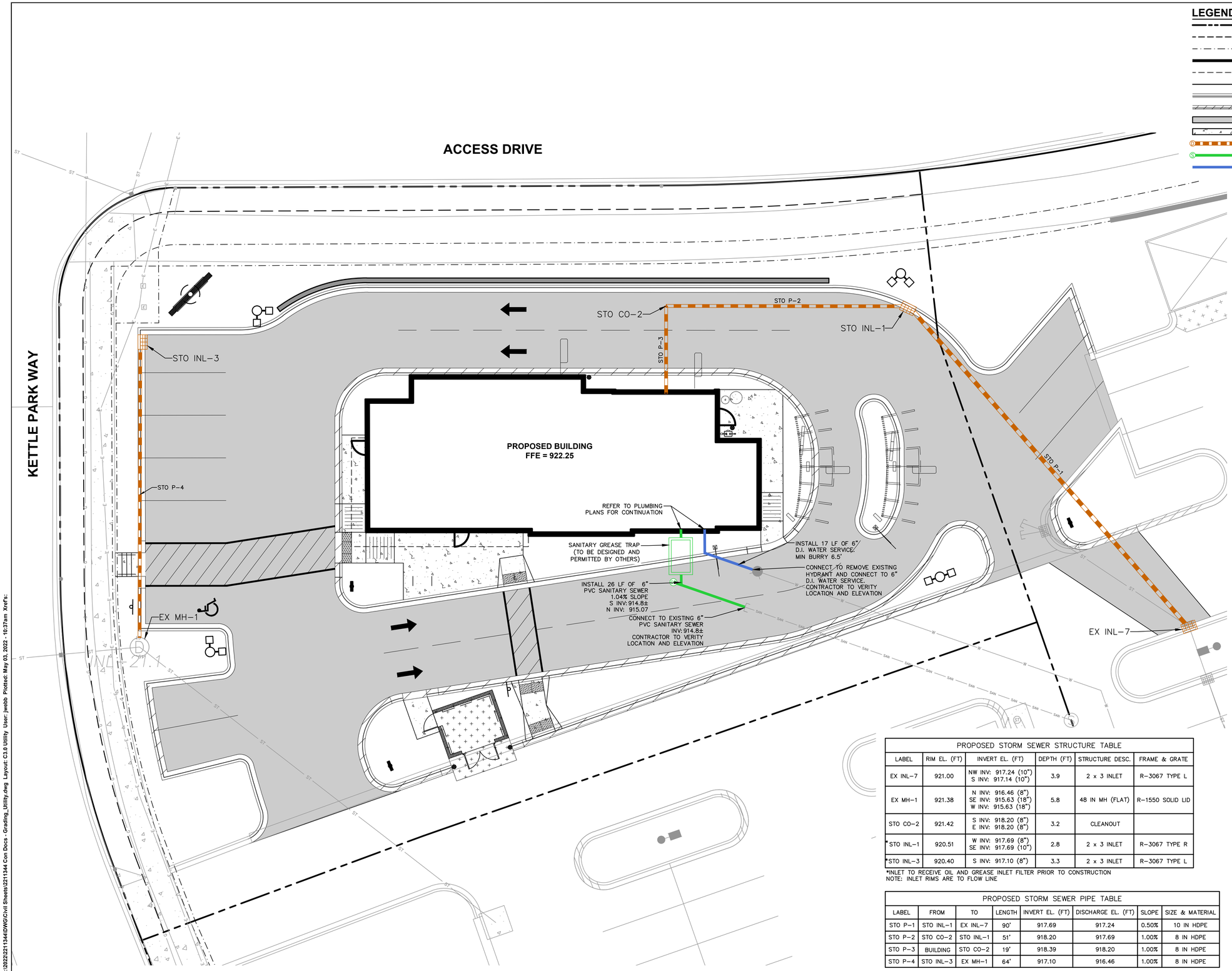

PROPOSED STORM SEWER STRUCTURE TABLE

LABEL	RIM EL. (FT)	INVERT EL. (FT)	DEPTH (FT)	STRUCTURE DESC.	FRAME & GRATE
EX INL-7	921.00	NW INV: 917.24 (10") S INV: 917.14 (10")	3.9	2 x 3 INLET	R-3067 TYPE L
EX MH-1	921.38	N INV: 916.46 (8") SE INV: 915.63 (18") W INV: 915.63 (18")	5.8	48 IN MH (FLAT)	R-1550 SOLID LID
STO CO-2	921.42	S INV: 918.20 (8") E INV: 918.20 (8")	3.2	CLEANOUT	
*STO INL-1	920.51	W INV: 917.69 (8") SE INV: 917.69 (10")	2.8	2 x 3 INLET	R-3067 TYPE R
*STO INL-3	920.40	S INV: 917.10 (8")	3.3	2 x 3 INLET	R-3067 TYPE L

*INLET TO RECEIVE OIL AND GREASE INLET FILTER PRIOR TO CONSTRUCTION
NOTE: INLET RIMS ARE TO FLOW LINE

PROPOSED STORM SEWER PIPE TABLE

LABEL	FROM	TO	LENGTH	INVERT EL. (FT)	DISCHARGE EL. (FT)	SLOPE	SIZE & MATERIAL
STO P-1	STO INL-1	EX INL-7	90'	917.69	917.24	0.50%	10 IN HDPE
STO P-2	STO CO-2	STO INL-1	51'	918.20	917.69	1.00%	8 IN HDPE
STO P-3	BUILDING	STO CO-2	19'	918.39	918.20	1.00%	8 IN HDPE
STO P-4	STO INL-3	EX MH-1	64'	917.10	916.46	1.00%	8 IN HDPE

north

SCALE IN FEET

10' 0 10'

DIGGERS HOTLINE

Toll Free (800) 242-8511

JSD

CREATE THE VISION TELL THE STORY

jsdinc.com

MADISON REGIONAL OFFICE
161 HORIZON DRIVE, SUITE 101
VERONA, WISCONSIN 53593
P. 608.848.5060

CLIENT:
AARM GROUP
STOUGHTON PROPERTIES LLC

CLIENT ADDRESS:
8605 W BRYN MOWN AVE, SUITE 309A
CHICAGO, IL 60631

PRELIMINARY NOT FOR CONSTRUCTION

PROJECT:
POPEYES RESTAURANT

PROJECT LOCATION:
LOT 7-1 KETTLE PARK WEST
STOUGHTON, DANE COUNTY
WI 53589

PLAN MODIFICATIONS:

#	Date:	Description:
1	04.25.22	SIP SUBMITTAL
2	05.03.22	RESPONSE TO COMMENTS
3		
4		
5		
6		
7		
8		
9		
10		
11		
12		
13		
14		
15		

Designed By: MSS
Reviewed By: MRH
Approved By: MRH

SHEET TITLE:
UTILITY PLAN

SHEET NUMBER:
C3.0

JSD PROJECT NO: 22-11344

THESE PLANS AND DESIGNS ARE COPYRIGHT PROTECTED AND MAY NOT BE USED IN WHOLE OR IN PART WITHOUT THE WRITTEN CONSENT OF JSD PROFESSIONAL SERVICES, INC.

File: I:\2022\221134\DWG\Civil Sheets\221134 Con Docs - Grading_Utility.dwg Layout: C3.0 Utility User: jwebb Plotted: May 03, 2022 - 10:37am Xref's:

GENERAL NOTES

1. EXISTING CONDITIONS ARE BASED OFF PREVIOUS DESIGN PLANS AND ALL EXISTING CONDITIONS ON SITE MUST BE VERIFIED PRIOR TO CONSTRUCTION.
2. ALL WORK IN THE ROW AND/OR PUBLIC EASEMENTS SHALL BE IN ACCORDANCE WITH THE STANDARD SPECIFICATIONS FOR SEWER & WATER CONSTRUCTION IN WISCONSIN AND MUNICIPAL REQUIREMENTS.
3. EXISTING GRADE SPOT ELEVATIONS SHOWN FOR INFORMATIONAL PURPOSES. DURING CONSTRUCTION MATCH EXISTING GRADES AT CONSTRUCTION LIMITS.
4. NO SITE GRADING OUTSIDE OR DOWNSLOPE OF PROPOSED SILT FENCE LOCATION. NO LAND DISTURBANCE BEYOND PROPERTY LINES.
5. JSD SHALL BE HELD HARMLESS AND DOES NOT WARRANT ANY DEVIATIONS BY THE OWNER/CONTRACTOR FROM THE APPROVED CONSTRUCTION PLANS THAT MAY RESULT IN DISCIPLINARY ACTIONS BY ANY OR ALL REGULATORY AGENCIES.

CONSTRUCTION SEQUENCING

1. INSTALL PERIMETER SILT FENCE, INLET PROTECTION AND TEMPORARY CONSTRUCTION ENTRANCE.
2. STRIP AND STOCKPILE TOPSOIL, INSTALL SILT FENCE AROUND PERIMETER OF STOCKPILE.
3. INSTALL UTILITY PIPING AND STRUCTURES, IMMEDIATELY INSTALL INLET PROTECTION.
4. COMPLETE FINAL GRADING, INSTALLATION OF GRAVEL BASE COURSES, PLACEMENT OF CURBS, PAVEMENTS, WALKS, ETC.
5. PLACE TOPSOIL AND IMMEDIATELY STABILIZE DISTURBED AREAS WITH EROSION CONTROL MEASURES AS INDICATED ON PLANS.
6. EROSION CONTROLS SHALL NOT BE REMOVED UNTIL SITE IS FULLY STABILIZED OR 70% VEGETATIVE COVER IS ESTABLISHED.

CONTRACTOR MAY MODIFY SEQUENCING AFTER ITEM NO. 1 AS NEEDED TO COMPLETE CONSTRUCTION IF EROSION CONTROLS ARE MAINTAINED IN ACCORDANCE WITH THE CONSTRUCTION SITE EROSION CONTROL REQUIREMENTS.

PAVING NOTES

1. GENERAL

1.1. ALL PAVING SHALL CONFORM TO "STATE OF WISCONSIN STANDARD SPECIFICATIONS FOR HIGHWAY & STRUCTURE CONSTRUCTION, LATEST EDITION, APPLICABLE CITY OF STOUGHTON ORDINANCES AND THE GEOTECHNICAL REPORT PREPARED BY CGC, INC. REPORT C16528 DATED NOVEMBER 29, 2016.

1.2. ALL PAVING DIMENSIONS ARE TO FACE OF CURB UNLESS SPECIFIED OTHERWISE.

1.3. SURFACE PREPARATION – NOTIFY ENGINEER/OWNER OF UNSATISFACTORY CONDITIONS. DO NOT BEGIN PAVING WORK UNTIL DEFICIENT SUBBASE AREAS HAVE BEEN CORRECTED AND ARE READY TO RECEIVE PAVING.

1.4. ANY REQUIRED REPLACEMENT OF PUBLIC CURB AND GUTTER SHALL MATCH EXISTING AND MEET MUNICIPALITY REQUIREMENTS.

2. ASPHALTIC CONCRETE PAVING SPECIFICATIONS

2.1. CODES AND STANDARDS – THE PLACING, CONSTRUCTION AND COMPOSITION OF THE ASPHALTIC BASE COURSE AND ASPHALTIC CONCRETE SURFACE COURSE SHALL BE IN ACCORDANCE WITH THE REQUIREMENTS OF SECTIONS 450, 455, 460 AND 465 OF THE STATE OF WISCONSIN STANDARD SPECIFICATIONS FOR HIGHWAY AND STRUCTURE CONSTRUCTION, CURRENT EDITION. HEREAFTER, THIS PUBLICATION WILL BE REFERRED TO AS STATE HIGHWAY SPECIFICATIONS.

2.2. WEATHER LIMITATIONS – APPLY TACK COATS WHEN AMBIENT TEMPERATURE IS ABOVE 50° F (10° C) AND WHEN TEMPERATURE HAS NOT BEEN BELOW 35° F (1° C) FOR 12 HOURS IMMEDIATELY PRIOR TO APPLICATION. DO NOT APPLY WHEN BASE IS WET OR CONTAINS EXCESS OF MOISTURE. CONSTRUCT ASPHALTIC CONCRETE SURFACE COURSE WHEN ATMOSPHERIC TEMPERATURE IS ABOVE 40° F (4° C) AND WHEN BASE IS DRY AND WHEN WEATHER IS NOT RAINY. BASE COURSE MAY BE PLACED WHEN AIR TEMPERATURE IS ABOVE 30° F (–1° C).

2.3. GRADE CONTROL – ESTABLISH AND MAINTAIN REQUIRED LINES AND ELEVATIONS FOR EACH COURSE DURING CONSTRUCTION.

2.4. CRUSHED AGGREGATE BASE COURSE – THE TOP LAYER OF BASE COURSE SHALL CONFORM TO SECTIONS 301 AND 305, STATE HIGHWAY SPECIFICATIONS.

2.5. BINDER COURSE AGGREGATE – THE AGGREGATE FOR THE BINDER COURSE SHALL CONFORM TO SECTIONS 460 AND 315, STATE HIGHWAY SPECIFICATIONS.

2.6. SURFACE COURSE AGGREGATE – THE AGGREGATE FOR THE SURFACE COURSE SHALL CONFORM TO SECTIONS 460 AND 465, STATE HIGHWAY SPECIFICATIONS.

2.7. ASPHALTIC MATERIALS – THE ASPHALTIC MATERIALS SHALL CONFORM TO SECTION 455 AND 460, STATE HIGHWAY SPECIFICATIONS.

3. CONCRETE PAVING SPECIFICATIONS

3.1. CONCRETE PAVING SHALL BE IN ACCORDANCE WITH THE REQUIREMENTS OF SECTIONS 415 AND 416 OF THE STATE HIGHWAY SPECIFICATIONS.

3.2. CONCRETE PAVEMENT SHALL BE REINFORCED WITH NOVOMESH 950 (OR EQUAL) FIBER REINFORCEMENT AT A RATE OF 5 LBS/CUBIC YARD.

3.3. CURING COMPOUNDS SHALL CONFORM TO SECTION 415 OF THE STATE HIGHWAY SPECIFICATIONS.

3.4. CONTRACTOR SHALL PROVIDE CONTROL JOINTS AND CONSTRUCTION JOINTS OF ONE–QUARTER CONCRETE THICKNESS AT AN EQUAL RATIO OF LENGTH TO WIDTH WHEREVER POSSIBLE WITH A MAXIMUM LENGTH BETWEEN JOINTS OF 8' ON CENTER.

3.5. CONTRACTOR SHALL PROVIDE EXPANSION JOINTS IN SIDEWALKS AT A MAXIMUM 24' ON CENTER.

3.6. EXTERIOR CONCRETE SURFACES SHALL BE BROOM FINISHED.

3.7. ALL CONCRETE SURFACES TO BE SEALED WITH TYPE TK–26UV CONCRETE SEALANT.

4. PAVEMENT MARKING SPECIFICATIONS

4.1. USE 4" WIDE, HIGH VISIBILITY YELLOW LATEX PAINT FOR STALL LINES.

4.2. MARK AND STRIPE ADA PARKING SPACES APPROPRIATELY.

4.3. ALL PAVEMENT MARKINGS INCLUDING: STOP BARS, CROSSWALKS, DIRECTIONAL ARROWS, PARKING STALL LINES, ADA STALL MARKINGS, NO PARKING ZONES, DROP–OFF/PICK–UP ZONES SHALL BE PAINTED WITH LATEX PAINT PER SPECIFICATIONS.

4.4. 2' x 4' TRUNCATED DOME WARNING DETECTION FIELD SHALL BE PLACED AT ALL ADA RAMPS.

GRADING AND SEEDING NOTES

1. ALL PROPOSED GRADES SHOWN ARE FINISHED GRADES. CONTRACTOR SHALL VERIFY ALL GRADES, MAKE SURE ALL AREAS DRAIN PROPERLY AND SHALL REPORT ANY DISCREPANCIES TO THE ENGINEER PRIOR TO CONSTRUCTION.
2. CONTRACTOR SHALL ASSUME SOLE RESPONSIBILITY FOR COMPUTATIONS OF ALL GRADING QUANTITIES. WHILE JSD PROFESSIONAL SERVICES, INC. ATTEMPTS TO PROVIDE A COST EFFECTIVE APPROACH TO BALANCE EARTHWORK, GRADING DESIGN IS BASED ON MANY FACTORS, INCLUDING SAFETY, AESTHETICS, AND COMMON ENGINEERING STANDARDS OF CARE. THEREFORE, NO GUARANTEE CAN BE MADE FOR A BALANCED SITE.
3. PARKING LOT AND DRIVEWAY ELEVATIONS ARE PAVEMENT GRADES, NOT TOP OF CURB GRADES, UNLESS OTHERWISE NOTED.
4. ANY WORK WITHIN RIGHT–OF–WAY SHALL BE PROPERLY PERMITTED AND COORDINATED WITH THE APPROPRIATE OFFICIALS PRIOR TO COMMENCEMENT OF ANY CONSTRUCTION ACTIVITIES. ALL GRADING WITHIN RIGHT–OF–WAY IS SUBJECT TO APPROVAL BY SAID OFFICIALS.
5. CONTRACTOR SHALL PROVIDE NOTICE TO THE MUNICIPALITY IN ADVANCE OF ANY SOIL DISTURBING ACTIVITIES, IN ACCORDANCE WITH MUNICIPAL REQUIREMENTS.
6. ALL DISTURBED AREAS SHALL BE SODDED AND/OR SEEDED AND MULCHED IMMEDIATELY FOLLOWING GRADING ACTIVITIES. SOD/SEED MIX TO BE IN ACCORDANCE WITH LANDSCAPE PLAN.
7. CONTRACTOR SHALL WATER ALL NEWLY SODDED/SEEDED AREAS DURING THE SUMMER MONTHS WHENEVER THERE IS A 7 DAY LAPSE WITH NO SIGNIFICANT RAINFALL.
8. CONTRACTOR TO DEEP TILL ALL COMPACTED PERVIOUS SURFACES PRIOR TO SODDING AND/OR SEEDING AND MULCHING.
9. ALL SLOPES 20% OR GREATER SHALL BE TEMPORARY SEEDED, MULCHED, OR OTHER MEANS OF COVER PLACED ON THEM WITHIN 2 WEEKS OF DISTURBANCE.
10. ALL EXPOSED SOIL AREAS THAT WILL NOT BE BROUGHT TO FINAL GRADE OR ON WHICH LAND DISTURBING ACTIVITIES WILL NOT BE PERFORMED FOR A PERIOD GREATER THAN 14 DAYS AND REQUIRE VEGETATIVE COVER FOR LESS THAN 1 YEAR, REQUIRE TEMPORARY SEEDING FOR EROSION CONTROL. SEEDING FOR EROSION CONTROL SHALL BE IN ACCORDANCE WITH WDNR TECHNICAL STANDARD 1059 AND CITY OF STOUGHTON ORDINANCE.

EROSION CONTROL NOTES

1. CONTRACTOR IS RESPONSIBLE TO NOTIFY ENGINEER OF RECORD AND OFFICIALS OF ANY CHANGES TO THE EROSION CONTROL AND STORMWATER MANAGEMENT PLANS. ENGINEER OF RECORD AND APPROPRIATE CITY OF STOUGHTON OFFICIALS MUST APPROVE ANY CHANGES PRIOR TO DEVIATION FROM THE APPROVED PLANS.
2. ALL EROSION CONTROL MEASURES SHALL BE CONSTRUCTED AND MAINTAINED BY THE CONTRACTOR IN ACCORDANCE WITH THE WISCONSIN DEPARTMENT OF NATURAL RESOURCES (WDNR) TECHNICAL STANDARDS (REFERRED TO AS BMP'S) AND CITY OF STOUGHTON ORDINANCE. IT IS THE CONTRACTOR'S RESPONSIBILITY TO OBTAIN A COPY OF THESE STANDARDS. CONTRACTOR SHALL BE RESPONSIBLE FOR ANY ADDITIONAL EROSION CONTROL MEASURES WHICH MAY BE NECESSARY TO MEET UNFORESEEN FIELD CONDITIONS.
5. INSTALL PERIMETER EROSION CONTROL MEASURES (SUCH AS CONSTRUCTION ENTRANCES, SILT FENCE AND EXISTING INLET PROTECTION) PRIOR TO ANY SITE WORK, INCLUDING GRADING OR DISTURBANCE OF EXISTING SURFACE COVER, AS SHOWN ON PLAN. MODIFICATIONS TO THE APPROVED EROSION CONTROL DESIGN IN ORDER TO MEET UNFORESEEN FIELD CONDITIONS IS ALLOWED IF MODIFICATIONS CONFORM TO BMP'S. ALL DESIGN MODIFICATIONS MUST BE APPROVED BY THE CITY OF STOUGHTON PRIOR TO DEVIATION OF THE APPROVED PLAN.
4. ADDITIONAL EROSION CONTROL MEASURES, AS REQUESTED BY STATE INSPECTORS, LOCAL INSPECTORS, COUNTY INSPECTORS AND/OR ENGINEER OF RECORD SHALL BE INSTALLED WITHIN 24 HOURS OF REQUEST.
5. INSPECTIONS AND MAINTENANCE OF ALL EROSION CONTROL MEASURES SHALL BE ROUTINE (ONCE PER WEEK MINIMUM) TO ENSURE PROPER FUNCTION OF EROSION CONTROLS AT ALL TIMES. EROSION CONTROL MEASURES ARE TO BE IN WORKING ORDER AT THE END OF EACH WORK DAY.
6. ALL EROSION AND SEDIMENT CONTROL ITEMS SHALL BE INSPECTED WITHIN 24 HOURS OF ALL RAIN EVENTS EXCEEDING 0.5 INCHES. ANY DAMAGED EROSION CONTROL MEASURES SHALL BE REPAIRED OR REPLACED IMMEDIATELY UPON INSPECTION.
7. CONSTRUCTION ENTRANCES SHALL BE INSTALLED AT ALL LOCATIONS OF VEHICLE INGRESS/EGRESS POINTS. ADDITIONAL LOCATIONS OTHER THAN AS SHOWN ON THE PLANS MUST BE PRIOR APPROVED BY THE MUNICIPALITY. CONSTRUCTION ENTRANCES SHALL BE 50' LONG AND NO LESS THAN 12" THICK BY USE OF 3" CLEAR STONE. CONSTRUCTION ENTRANCES SHALL BE MAINTAINED BY THE CONTRACTOR IN A CONDITION WHICH WILL PREVENT THE TRACKING OF MUD OR DRY SEDIMENT ONTO ADJACENT PUBLIC STREETS AFTER EACH WORKING DAY OR MORE FREQUENTLY AS REQUIRED.
8. PAVED SURFACES ADJACENT TO CONSTRUCTION SITE VEHICLE ACCESS SHALL BE SWEPT AND/OR SCRAPED TO REMOVE ACCUMULATED SOIL, DIRT AND/OR DUST AFTER THE END OF EACH WORK DAY AND AS REQUESTED BY THE CITY OF STOUGHTON.
9. INLET PROTECTION SHALL BE IMMEDIATELY FITTED AT THE INLET OF ALL INSTALLED STORM SEWER AND SILT FENCE SHALL BE IMMEDIATELY FITTED AT ALL INSTALLED CULVERT INLETS TO PREVENT SEDIMENT DEPOSITION WITHIN STORM SEWER SYSTEMS.
10. INSTALL EROSION CONTROLS ON THE DOWNSTREAM SIDE OF STOCKPILES. IF STOCKPILE REMAINS UNDISTURBED FOR MORE THAN SEVEN (7) DAYS, TEMPORARY SEEDING AND STABILIZATION IN ACCORDANCE WITH BEST MANAGEMENT PRACTICES IS REQUIRED. IF DISTURBANCE OCCURS BETWEEN NOVEMBER 15TH AND MAY 15TH, THE MULCHING SHALL BE PERFORMED BY HYDRO–MULCHING WITH A "TACKIFIER."
11. DITCH CHECKS AND APPLICABLE EROSION NETTING/MATTING SHALL BE INSTALLED IMMEDIATELY AFTER COMPLETION OF GRADING EFFORTS WITHIN DITCHES/SWALES TO PREVENT SOIL TRANSPORTATION.
12. EROSION CONTROL FOR UTILITY CONSTRUCTION (STORM SEWER, SANITARY SEWER, WATER MAIN, ETC.):
    A. PLACE EXCAVATED TRENCH MATERIAL ON THE HIGH SIDE OF THE TRENCH.
    B. BACKFILL, COMPACT, AND STABILIZE THE TRENCH IMMEDIATELY AFTER PIPE CONSTRUCTION.
    C. DISCHARGE TRENCH WATER INTO A SEDIMENTATION BASIN OR FILTERING TANK IN ACCORDANCE WITH THE DEWATERING TECHNICAL STANDARD NO. 1061 PRIOR TO RELEASE INTO THE STORM SEWER, RECEIVING STREAM, OR DRAINAGE DITCH.
13. ALL SLOPES 4:1 OR GREATER SHALL BE STABILIZED WITH CLASS I, TYPE B EROSION MATTING OR APPLICATION OF A WISCONSIN DEPARTMENT OF TRANSPORTATION (WisDOT) APPROVED POLYMER SOIL STABILIZATION TREATMENT OR A COMBINATION THEREOF, AS REQUIRED WITHIN 7 DAYS OF REACHING FINAL GRADE AND/OR AS SOON AS CONDITIONS ALLOW. DRAINAGE SWALES SHALL BE STABILIZED WITH CLASS II, TYPE B EROSION MATTING. EROSION MATTING AND/OR NETTING USED ONSITE SHALL BE INSTALLED IN ACCORDANCE WITH MANUFACTURER'S GUIDELINES AND WDNR TECHNICAL STANDARDS 1052 AND 1053.
14. CONTRACTOR SHALL TAKE ALL NECESSARY STEPS TO CONTROL DUST ARISING FROM CONSTRUCTION OPERATIONS. REFER TO WDNR TECHNICAL STANDARD 1068.
15. EROSION CONTROL MEASURES SHALL NOT BE REMOVED UNTIL ALL LAND DISTURBING CONSTRUCTION ACTIVITY AT THE SITE HAS BEEN COMPLETED AND THAT A UNIFORM PERENNIAL VEGETATIVE COVER HAS BEEN ESTABLISHED WITH A DENSITY OF AT LEAST 70% FOR UNPAVED AREAS AND AREAS NOT COVERED BY PERMANENT STRUCTURES OR THAT EMPLOY EQUIVALENT PERMANENT STABILIZATION MEASURES.
16. CONTRACTOR/OWNER SHALL FILE A NOTICE OF TERMINATION UPON COMPLETION OF THE PROJECT IN ACCORDANCE WITH WDNR REQUIREMENTS AND/OR PROPERTY SALE IN ACCORDANCE WITH WDNR REQUIREMENTS.
17. STABILIZATION PRACTICES:

17.1. STABILIZATION MEASURES SHALL BE INITIATED AS SOON AS PRACTICABLE IN PORTIONS OF THE SITE WHERE CONSTRUCTION ACTIVITIES HAVE TEMPORARILY OR PERMANENTLY CEASED. NO MORE THAN SEVEN (7) DAYS SHALL PASS AFTER THE CONSTRUCTION ACTIVITY IN THAT PORTION OF THE SITE HAS CEASED UNLESS:

17.2. THE INITIATION STABILIZATION MEASURES BY THE SEVENTH (7) DAY AFTER CONSTRUCTION ACTIVITY HAS CEASED IS PRECLUDED BY SNOW COVER. IN THAT EVENT, STABILIZATION SHALL BE INITIATED AS SOON AS PRACTICABLE.

17.3. CONSTRUCTION ACTIVITY WILL RESUME ON A PORTION OF THE SITE WITHIN FOURTEEN (14) DAYS FROM WHEN ACTIVITY CEASED, (I.E. THE TOTAL TIME PERIOD THAT THE CONSTRUCTION ACTIVITY IS TEMPORARILY CEASED IS LESS THAN FOURTEEN (14) DAYS. IN THAT EVENT, STABILIZATION MEASURES DO NOT HAVE TO BE INITIATED ON THAT PORTION OF THE SITE BY THE SEVENTH (7) DAY AFTER CONSTRUCTION ACTIVITY HAS TEMPORARILY CEASED.

17.4. STABILIZATION MEASURES SHALL BE DETERMINED BASED ON SITE CONDITIONS AT THE TIME OF CONSTRUCTION ACTIVITY HAS CEASED, INCLUDING BUT NOT LIMITED TO WEATHER CONDITIONS AND LENGTH OF TIME MEASURE MUST BE EFFECTIVE. THE FOLLOWING ARE ACCEPTABLE STABILIZATION MEASURES:
- PERMANENT SEEDING; IN ACCORDANCE WITH APPROVED CONSTRUCTION SPECIFICATION
- TEMPORARY SEEDING; MAY CONSIST OF SPRING OATS(100LBS/ACRE) AND/OR WHEAT OR CEREAL RYE (150LB/ACRE)
- HYDRO–MULCHING WITH A TACKIFIER
- GEOTEXTILE EROSION MATTING
- SODDING

UTILITY NOTES

1. ALL EXISTING UTILITIES ARE SHOWN FOR INFORMATIONAL PURPOSES ONLY AND ARE NOT GUARANTEED TO BE ACCURATE OR ALL INCLUSIVE. THE CONTRACTOR IS RESPONSIBLE FOR MAKING HIS OWN DETERMINATION AS TO THE TYPE AND LOCATIONS OF UNDERGROUND UTILITIES AS MAY BE NECESSARY TO AVOID DAMAGE THERETO. CONTRACTOR/OWNER SHALL CALL "DIGGER'S HOTLINE" PRIOR TO ANY CONSTRUCTION.
2. PRIOR TO CONSTRUCTION, THE PRIME CONTRACTOR IS RESPONSIBLE FOR:
   EXAMINING ALL SITE CONDITIONS RELATIVE TO THE CONDITIONS INDICATED ON THE ENGINEERING DRAWINGS. ANY DISCREPANCIES ARE TO BE REPORTED TO THE ENGINEER AND RESOLVED PRIOR TO THE START OF CONSTRUCTION.
   - OBTAINING ALL PERMITS INCLUDING PERMIT COSTS, TAP FEES, METER DEPOSITS, BONDS, AND ALL OTHER FEES REQUIRED FOR PROPOSED WORK TO OBTAIN OCCUPANCY.
   - VERIFYING ALL ELEVATIONS, LOCATIONS AND SIZES OF SANITARY, WATER AND STORM LATERALS AND CHECK ALL UTILITY CROSSINGS FOR CONFLICTS. NOTIFY ENGINEER OF ANY DISCREPANCY. NO WORK SHALL BE PERFORMED UNTIL THE DISCREPANCY IS RESOLVED.
   - NOTIFYING ALL UTILITIES PRIOR TO INSTALLATION OF ANY UNDERGROUND IMPROVEMENTS.
   - NOTIFYING THE DESIGN ENGINEER AND MUNICIPALITY 48 HOURS PRIOR TO THE START OF CONSTRUCTION TO ARRANGE FOR APPROPRIATE CONSTRUCTION OBSERVATION.
   - COORDINATING ALL CONSTRUCTION WITH OTHER CONTRACTORS INVOLVED WITH CONSTRUCTION OF THE PROPOSED DEVELOPMENT AND FOR REPORTING ANY ERRORS OR DISCREPANCIES BETWEEN THESE PLANS AND PLANS PREPARED BY OTHERS.
3. ALL UTILITY WORK SHALL BE DONE IN ACCORDANCE WITH THE STANDARD SPECIFICATIONS FOR SEWER AND WATER CONSTRUCTION IN WISCONSIN – AND ALL STATE AND LOCAL CODES AND SPECIFICATIONS. IT IS THE CONTRACTORS RESPONSIBILITY TO DETERMINE WHICH SPECIFICATIONS AND CODES APPLY, AND TO COORDINATE ALL CONSTRUCTION ACTIVITIES WITH THE APPROPRIATE LOCAL AND STATE AUTHORITIES.
4. SPECIFICATIONS SHALL COMPLY WITH THE CITY OF STOUGHTON SPECIAL PROVISIONS.
5. LENGTHS OF ALL UTILITIES ARE TO CENTER OF STRUCTURES OR FITTINGS AND MAY VARY SLIGHTLY FROM PLAN. LENGTHS SHALL BE VERIFIED IN THE FIELD DURING CONSTRUCTION.
6. CONTRACTOR IS RESPONSIBLE FOR SITE SAFETY DURING THE CONSTRUCTION OF IMPROVEMENTS.
7. CONTRACTOR SHALL INSTALL A PEDESTRIAN FENCE AROUND ALL EXCAVATIONS TO BE LEFT OPEN OVER NIGHT AS REQUIRED IN CONSTRUCTION SITES WHERE THE POTENTIAL FOR PEDESTRIAN INJURY EXISTS.
8. CONTRACTOR SHALL ADJUST AND/OR RECONSTRUCT ALL UTILITY COVERS (SUCH AS MANHOLE COVERS, VALVE BOX COVERS, ETC.) TO MATCH THE FINISHED GRADES OF THE AREAS EFFECTED BY THE CONSTRUCTION.
9. THE PRIME CONTRACTOR IS RESPONSIBLE FOR COORDINATING ALL CONSTRUCTION WITH OTHER CONTRACTORS INVOLVED WITH CONSTRUCTION OF THE PROPOSED DEVELOPMENT AND FOR REPORTING ANY ERRORS OR DISCREPANCIES BETWEEN THESE PLANS AND PLANS PREPARED BY OTHERS.
10. ANY SANITARY SEWER, SANITARY SEWER SERVICES, WATER MAIN, WATER SERVICES, STORM SEWER, OR OTHER UTILITIES, WHICH ARE DAMAGED BY THE CONTRACTORS, SHALL BE REPAIRED TO THE OWNER'S SATISFACTION AT THE CONTRACTOR'S EXPENSE.
11. THE CONTRACTOR IS RESPONSIBLE FOR PROVIDING THE ENGINEER WITH AS–BUILT CONDITIONS OF THE DESIGNATED IMPROVEMENTS IN ORDER THAT THE APPROPRIATE DRAWINGS CAN BE PREPARED, IF REQUIRED. ANY CHANGES TO THE DRAWINGS OR ADDITIONAL ITEMS MUST BE REPORTED TO THE ENGINEER AS WORK PROGRESSES.
12. STORM SEWER SPECIFICATIONS –

    PIPE – REINFORCED CONCRETE PIPE (RCP) SHALL MEET THE REQUIREMENTS OF ASTM CLASS III (MINIMUM) C–76 WITH RUBBER GASKET JOINTS CONFORMING TO ASTM C–443. HIGH DENSITY DUAL–WALL POLYETHYLENE CORRUGATED PIPE SHALL BE AS MANUFACTURED BY ADS OR EQUAL WITH WATER TIGHT JOINTS, AND SHALL MEET THE REQUIREMENTS OF AASHTO DESIGNATION M–294 TYPE "S".

    INLETS – INLETS SHALL BE CONSTRUCTED IN ACCORDANCE WITH FILE. NO. 28 OF THE "STANDARD SPECIFICATIONS", OR APPROVED EQUAL WITH A 1'–8" X 2'–6" MAXIMUM OPENING. CURB FRAME & GRATE SHALL BE NEENAH R–3067 WITH TYPE R GRATE, OR EQUAL.

    BACKFILL AND BEDDING – STORM SEWER SHALL BE CONSTRUCTED WITH GRAVEL BACKFILL AND CLASS "B" BEDDING IN ALL PAVED AREAS AND TO A POINT 5 FEET BEYOND THE EDGE OF PAVEMENT. TRENCHES RUNNING PARALLEL TO AND LESS THAN 5 FEET FROM THE EDGE OF PAVEMENT SHALL ALSO REQUIRE GRAVEL BACKFILL. LANDSCAPED AREAS MAY BE BACKFILLED WITH EXCAVATED MATERIAL IN CONFORMANCE WITH SECTION 8.43.5 OF THE "STANDARD SPECIFICATIONS".

    MANHOLE FRAMES AND COVERS – MANHOLE FRAMES AND COVERS SHALL BE NEENAH R–1550 WITH TYPE "B" SELF SEALING LIDS, NON–ROCKING OR EQUAL.
13. WATER MAIN SPECIFICATIONS –

    PIPE – DUCTILE IRON PIPE SHALL BE CLASS 52 CONFORMING TO AWWA C151 AND CHAPTER 8.18.0 OF THE "STANDARD SPECIFICATIONS". POLYVINYL CHLORIDE (PVC) PIPE SHALL MEET THE REQUIREMENTS OF AWWA STANDARD C–900, CLASS 150, DR–18, WITH CAST IRON O.D. AND INTEGRAL ELASTOMERIC BELL AND SPIGOT JOINTS. NON–METALLIC WATER MAINS SHALL BE INSTALLED WITH BLUE INSULATION TRACER WIRE AND CONFORM WITH SPS 382.30(11)(h).

    VALVES AND VALVE BOXES – GATE VALVES SHALL BE AWWA GATE VALVES MEETING THE REQUIREMENTS OF AWWA C–500 AND CHAPTER 8.27.0 OF THE "STANDARD SPECIFICATIONS". GATE VALVES AND VALVE BOXES SHALL CONFORM TO LOCAL PLUMBING ORDINANCES.

    HYDRANTS – HYDRANTS SHALL CONFORM TO THE SPECIFICATIONS OF THE CITY OF STOUGHTON. THE DISTANCE FROM THE GROUND LINE TO THE CENTERLINE OF THE LOWEST NOZZLE AND THE LOWEST CONNECTION OF THE FIRE DEPARTMENT SHALL BE NO LESS THAN 18–INCHES AND NO GREATER THAN 23–INCHES (SEE DETAIL).

    BEDDING AND COVER MATERIAL – PIPE BEDDING AND COVER MATERIAL SHALL BE SAND, CRUSHED STONE CHIPS OR CRUSHED STONE SCREENINGS CONFORMING TO CHAPTER 8.43.2 OF THE "STANDARD SPECIFICATIONS".

    BACKFILL – BACKFILL MATERIAL AND INSTALLATION SHALL BE IN ACCORDANCE WITH CHAPTER 2.6.0 OF THE "STANDARD SPECIFICATIONS". GRAVEL BACKFILL IS REQUIRED IN ALL PAVED AREAS AND TO A POINT 5 FEET BEYOND THE EDGE OF PAVEMENT. TRENCHES RUNNING PARALLEL TO AND LESS THAN 5 FEET FROM THE EDGE OF PAVEMENT SHALL ALSO REQUIRE GRAVEL BACKFILL. LANDSCAPED AREAS MAY BE BACKFILLED WITH EXCAVATED MATERIAL IN CONFORMANCE WITH SECTION 8.43.5 OF THE "STANDARD SPECIFICATIONS".
14. SANITARY SEWER SPECIFICATIONS –

    PIPE – SANITARY SEWER PIPE MATERIAL SHALL BE POLYVINYL CHLORIDE (PVC) MEETING REQUIREMENTS OF ASTM D 3034, SDR–35, WITH INTEGRAL BELL TYPE FLEXIBLE ELASTOMERIC JOINTS, MEETING THE REQUIREMENTS OF ASTM D–3212.

    BEDDING AND COVER MATERIAL – BEDDING AND COVER MATERIAL SHALL CONFORM TO THE APPROPRIATE SECTIONS OF THE "STANDARD SPECIFICATION" WITH THE FOLLOWING MODIFICATION: "COVER MATERIAL SHALL BE THE SAME AS USED FOR BEDDING AND SHALL CONFORM TO SECTION 8.43.2 (A). BEDDING AND COVER MATERIAL SHALL BE PLACED IN A MINIMUM OF THREE SEPARATE LIFTS, OR AS REQUIRED TO INSURE ADEQUATE COMPACTING OF THESE MATERIALS, WITH ONE LIFT OF BEDDING MATERIAL ENDING AT OR NEAR THE SPRINGLINE OF THE PIPE. THE CONTRACTOR SHALL TAKE CARE TO COMPLETELY WORK BEDDING MATERIAL UNDER THE HAUNCH OF THE PIPE TO PROVIDE ADEQUATE SIDE SUPPORT."

    BACKFILL – BACKFILL MATERIAL AND INSTALLATION SHALL BE IN ACCORDANCE CHAPTER 2.6.0 OF THE "STANDARD SPECIFICATIONS." GRAVEL BACKFILL IS REQUIRED IN ALL PAVED AREAS AND TO A POINT 5 FEET BEYOND THE EDGE OF PAVEMENT. TRENCHES RUNNING PARALLEL TO AND LESS THAN 5 FEET FROM THE EDGE OF PAVEMENT SHALL ALSO REQUIRE GRAVEL BACKFILL. LANDSCAPED AREAS MAY BE BACKFILLED WITH EXCAVATED MATERIAL IN CONFORMANCE WITH SECTION 8.43.5 OF THE "STANDARD SPECIFICATIONS."

    MANHOLES – MANHOLES SHALL BE CONSTRUCTED IN ACCORDANCE WITH FILE NOS. 12, 13 AND 15 OF THE "STANDARD SPECIFICATIONS" AND ALL SPECIAL PROVISIONS OF THE CITY OF STOUGHTON.

    MANHOLE FRAMES AND COVERS – MANHOLE FRAMES AND COVERS SHALL BE NEENAH R–1550 WITH TYPE "B" SELF SEALING LIDS, NON–ROCKING OR EQUAL.
15. WATERMAIN AND SANITARY SEWER SHALL BE INSULATED WHEREVER THE DEPTH OF COVER IS LESS THAN 6 FEET. INSULATION AND INSTALLATION OF INSULATION SHALL BE CONFORMING WITH CHAPTER 4.17.0 "INSULATION" OF THE STANDARD SPECIFICATIONS FOR SEWER AND WATER CONSTRUCTION IN WISCONSIN 6TH EDITION UPDATED WITH ITS LATEST ADDENDUM (TYP.).

DIGGERS HOTLINE
Toll Free (800) 242-8511

JSD
CREATE THE VISION TELL THE STORY
jsdinc.com
MADISON REGIONAL OFFICE
161 HORIZON DRIVE, SUITE 101
VERONA, WISCONSIN 53593
P. 608.848.5060

CLIENT:
AARM GROUP STOUGHTON PROPERTIES LLC

CLIENT ADDRESS:
8605 W BRYN MOWN AVE, SUITE 309A CHICAGO, IL 60631

PRELIMINARY NOT FOR CONSTRUCTION

PROJECT:
POPEYES RESTAURANT

PROJECT LOCATION:
LOT 7-1 KETTLE PARK WEST STOUGHTON, DANE COUNTY WI 53589

PLAN MODIFICATIONS:

#	Date:	Description:
1	04.25.22	SIP SUBMITTAL
2	05.03.22	RESPONSE TO COMMENTS
3		
4		
5		
6		
7		
8		
9		
10		
11		
12		
13		
14		
15		

Designed By: MSS
Reviewed By: MRH
Approved By: MRH

SHEET TITLE:
NOTES

SHEET NUMBER:
C4.0

JSD PROJECT NO: 22-11344

THESE PLANS AND DESIGNS ARE COPYRIGHT PROTECTED AND MAY NOT BE USED IN WHOLE OR IN PART WITHOUT THE WRITTEN CONSENT OF JSD PROFESSIONAL SERVICES, INC.

File: I:\2022\221344\DWG\Civil Sheets\221344 Con Docs - Site.dwg Layout: C4.0 NOTES User: jwebb Plotted: May 03, 2022 - 10:38am Xref's:

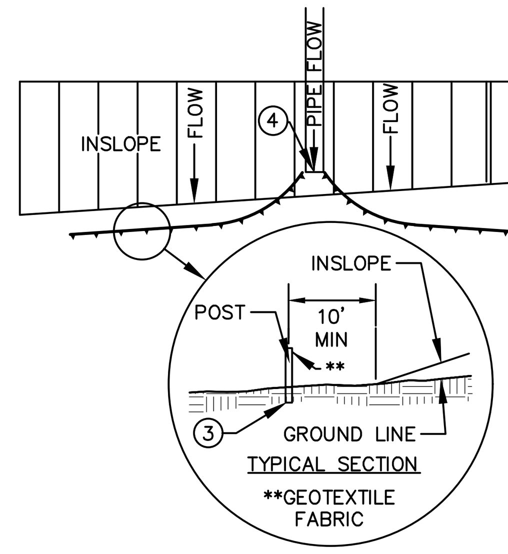

SILT FENCE ALONG SLOPES & OUTFALLS

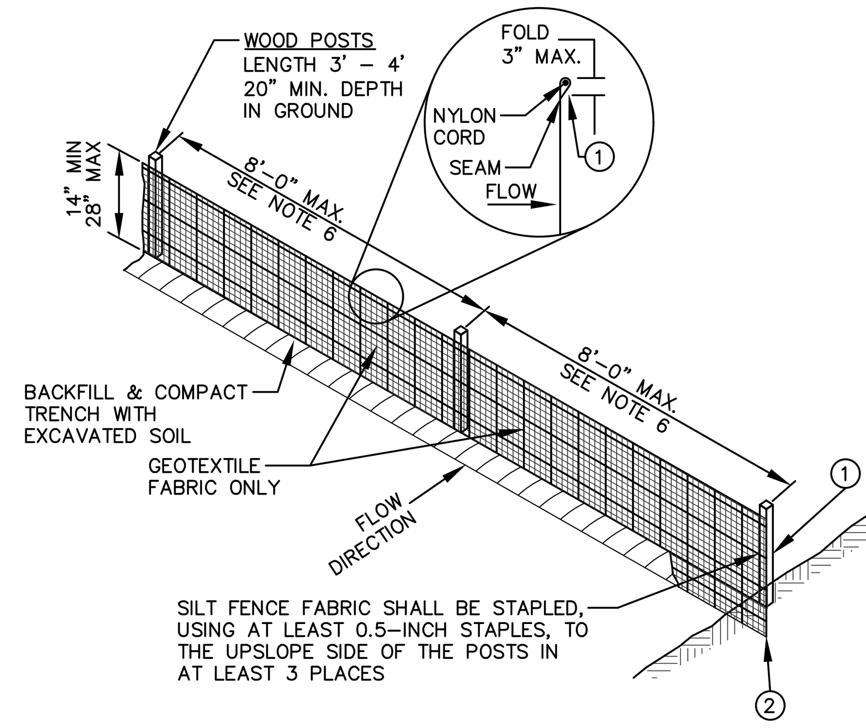

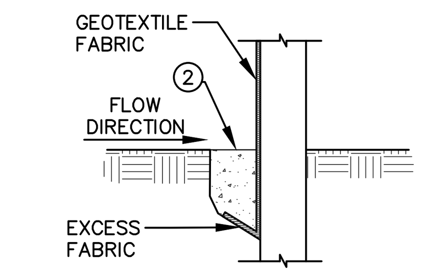

NOTE:
ADDITIONAL POST DEPTH OR TIE BACKS MAY BE REQUIRED IN UNSTABLE SOILS.

TRENCH DETAIL

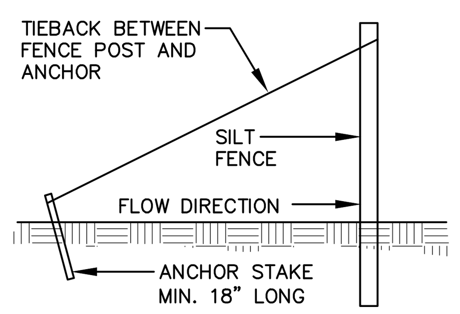

SILT FENCE TIE BACK
(WHEN ADDITIONAL SUPPORT REQUIRED)

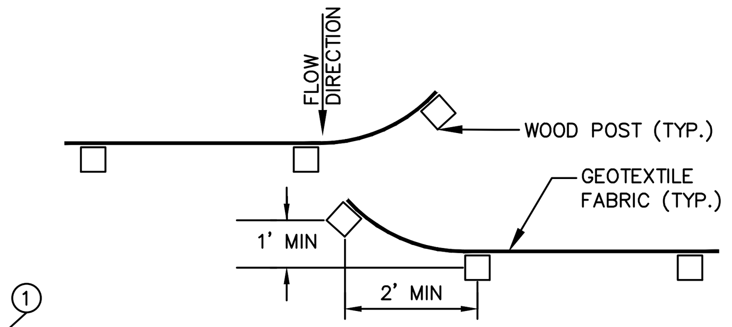

JOINT (HOOK METHOD)

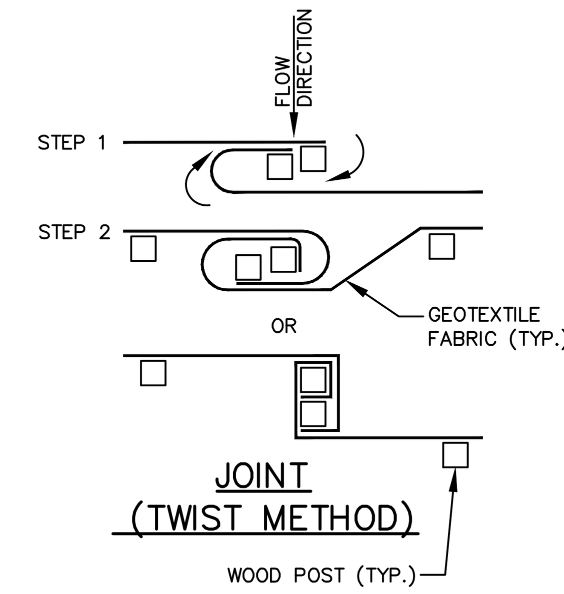

JOINT
(TWIST METHOD)

GENERAL NOTES:

1. SILT FENCE SHALL BE ANCHORED BY SPREADING AT LEAST 8–INCHES OF FABRIC IN A 4–INCH WIDE AND 6–INCH DEEP TRENCH OR 6–INCH DEEP V–TRENCH ON THE UPSLOPE SIDE OF THE FENCE. TRENCHES SHALL NOT BE EXCAVATED WIDER OR DEEPER THAN NECESSARY FOR PROPER INSTALLATION.
2. FOLD MATERIAL TO FIT TRENCH AND BACKFILL AND COMPACT TRENCH WITH EXCAVATED SOIL.
3. WOOD POSTS SHALL BE A MINIMUM SIZE OF 1.125–INCHES x 1.125–INCHES OF DRIED OAK OR HICKORY.
4. SILT FENCE TO EXTEND ABOVE THE TOP OF PIPE.
5. SILT FENCE CONSTRUCTION AND GEOTEXTILE FABRIC SHALL CONFORM TO WDNR TECHNICAL STANDARD 1056.
6. POST SPACING SHALL BE SELECTED BASED ON GEOTEXTILE FABRIC (8–FEET FOR WOVEN & 3–FEET FOR NON–WOVEN)

REV. 7–01–2019

SILT FENCE
N.T.S.

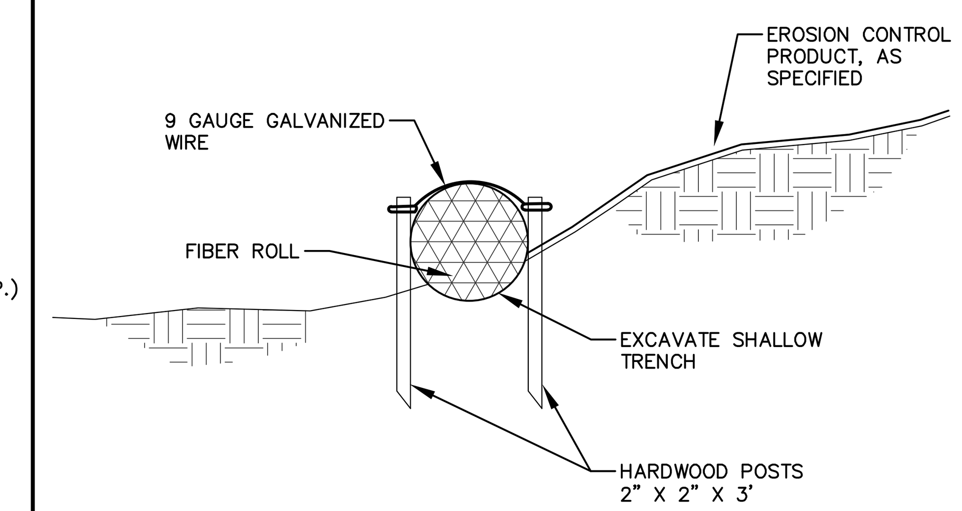

GENERAL NOTES:

1. EXCAVATE A SHALLOW TRENCH SLIGHTLY BELOW BASEFLOW OR A 4" TRENCH ON SLOPE CONTOURS.
2. PLACE THE ROLL IN THE TRENCH AND ANCHOR WITH 2" X 2" POSTS PLACED ON BOTH SIDES OF THE ROLL AND SPACED LATERALLY ON 2' TO 4' CENTERS. TRIM THE TOP OF THE POSTS EVEN WITH THE EDGE OF THE ROLL, IF NECESSARY.
3. NOTCH THE POSTS AND TIE TOGETHER, ACROSS THE ROLL, WITH 9 GAUGE GALVANIZED WIRE OR 1/8" DIAMETER BRAIDED NYLON ROPE.
4. PLACE SOIL EXCAVATED FROM THE TRENCH BEHIND THE ROLL AND HAND TAMP. PLANT WITH SUITABLE HERBACEOUS OR WOODY VEGETATION AS SPECIFIED.

REV. 12–7–2018

FIBER SILT SOCK
N.T.S.

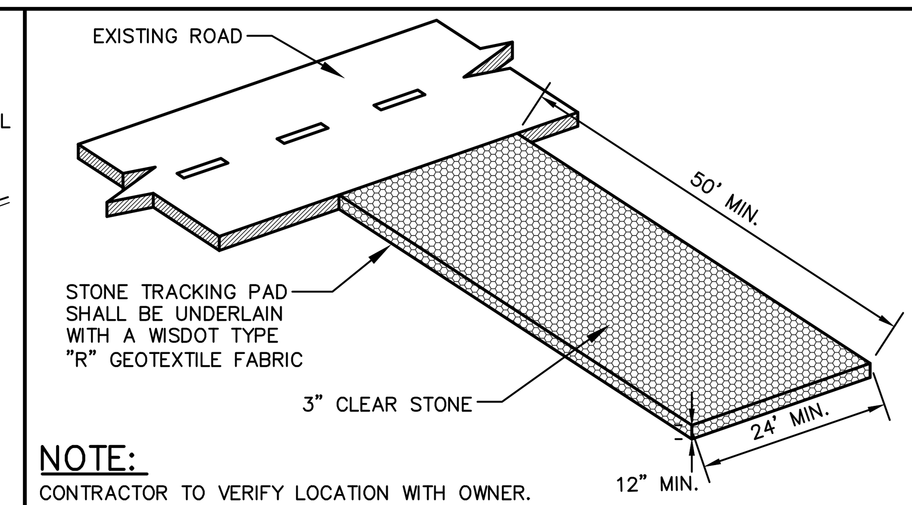

NOTE:
CONTRACTOR TO VERIFY LOCATION WITH OWNER.

CONSTRUCTION ENTRANCE
N.T.S.

REV. 12–10–2018

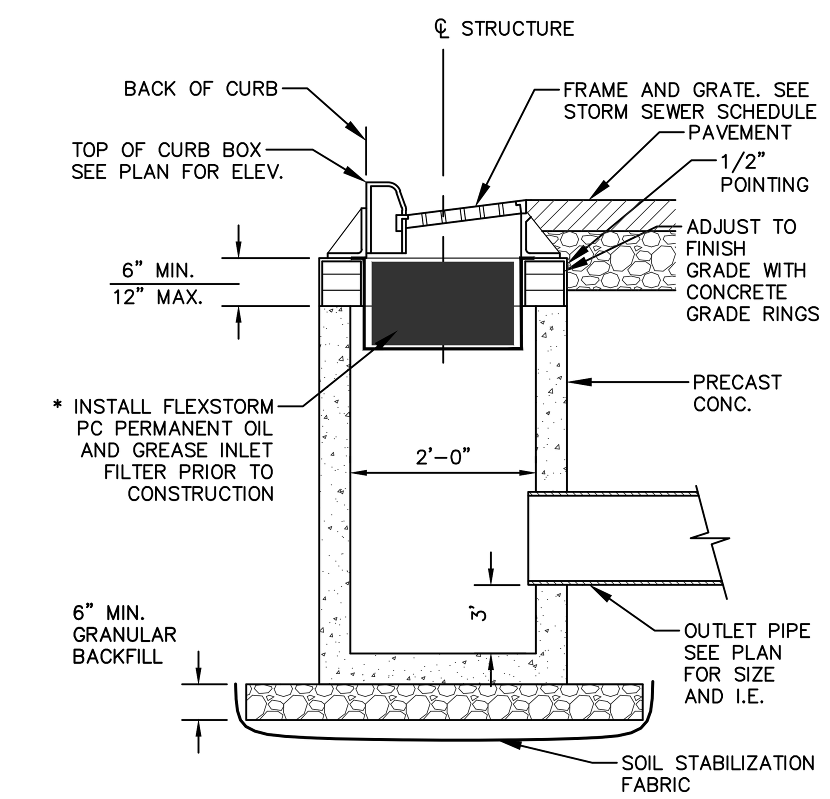

NOTE:
*INSTALL FLEXSTORM PURE CATCH BASIN FILTER INSERT AS MANUFACTURED BY INLET & PIPE PROTECTION, INC. FILTER SHALL BE INSTALLED IN ACCORDANCE WITH MANUFACTURER'S INSTRUCTIONS, RECOMMENDATIONS AND SPECIFICATIONS.

STORM INLET W/ SUMP - OIL & GREASE FILTER
N.T.S.

REV. 11–26–2018

PRELIMINARY NOT FOR CONSTRUCTION

FLEXSTORM INLET FILTERS TO MEET DANE COUNTY EROSION CONTROL STANDARDS

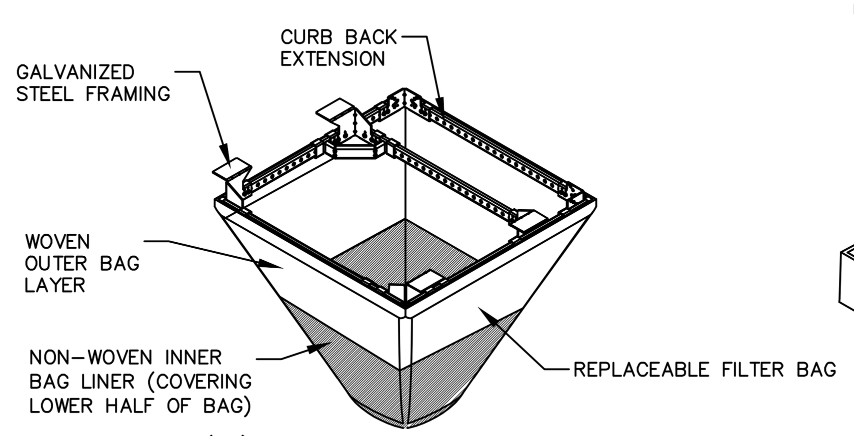

(HB) HYBRID FILTER BAG SPECIFICATIONS:

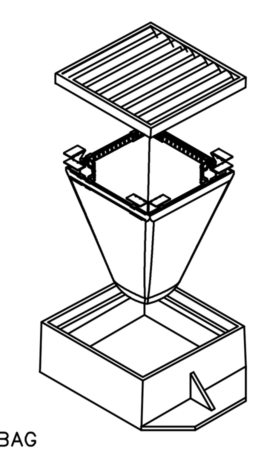

INSTALLATION INSTRUCTIONS:
1. REMOVE GRATE FROM THE DRAINAGE STRUCTURE
2. CLEAN STONE AND DIRT FROM LEDGE (LIP) OF DRAINAGE STRUCTURE
3. DROP THE INLET FILTER THROUGH THE CLEAR OPENING SUCH THAT THE HANGERS REST FIRMLY ON THE LIP OF THE STRUCTURE
4. REPLACE THE GRATE AND CONFIRM IT IS NOT ELEVATED MORE THAN 1/8"

MAINTENANCE GUIDELINES:
1. EMPTY THE SEDIMENT BAG IF MORE THAN HALF FILLED WITH SEDIMENT AND DEBRIS
2. REMOVE THE GRATE, ENGAGE THE LIFTING POINTS, AND LIFT FILTER FROM THE DRAINAGE STRUCTURE.
3. DISPOSE OF SEDIMENT AND DEBRIS BY THE ENGINEERING OR MAINTENANCE CONTRACT 4. ALTERNATIVELY, AN INDUSTRIAL VACUUM CAN BE USED TO COLLECT SEDIMENT FROM THE FILTER BAG

CATCH-IT INLET FILTER (Temporary Inlet Protection)

Neenah Casting	Inlet Type	Grate Size	Opening Size	Bag Cap (ft^3)	Flow Ratings (CFS) HB (Hybrid Bag)	Flow Ratings (CFS) Bypass	ADS P/N
3067	Curb Box	35.25 x 17.75	33.0 x 15.0	4.4	2.0	5.8	62LCBEXTHB
3246A	Curb Box	35.75 x 23.875	33.5 x 21.0	4.2	1.1	3.3	62LCB3624HB
3030	Square/Rect (SQ)	23 x 16	20.5 x 13.5	1.6	0.7	2.2	62MCB2316HB
3067-C	Square/Rect (SQ)	35.25 x 17.75	33 x 15	3.2	1.0	5.2	62LSQ3618HB
R-2501	Round (RD)	~26	~24	2.3	0.8	5.2	62MRD26HB
R-1772/2560	Round (RD)	22.25-23.5	20.5-21	1.5	0.6	4.6	62MRD22HB

Woven and Non-Woven Geotextile Filter Bag Properties (Minimum Average Roll Values)

PROPERTY	TEST METHOD	WOVEN (OUTER)	NON-WOVEN (LINER)
TENSILE STRENGTH	ASTM D4632	350 x 225 Lbs	100 Lbs
ELONGATION	ASTM D4632	20% x 15%	50%
CBR PUNCTURE	ASTM D6241	1000 Lbs	65 Lbs
TRAPEZOIDAL TEAR	ASTM D4533	110 x 75 Lbs	45 Lbs
UV RESISTANCE	ASTM D4355	90%	70%
OPENING SIZE (AOS)	ASTM D4751	20 US STD SIEVE	40 US STD SIEVE
PERMITTIVITY	ASTM D4491	1.5 Sec^{-1}	2.0 Sec^{-1}
WATER FLOW RATE	ASTM D4491	200 gal/min/ft^2	145 gal/min/ft^2
MINIMUM FILTER BAG VOLUME		2 CUBIC FT	

FLEXSTORM INLET FILTERS
CATCH IT

SIZE	DRAWN BY	DWG NO	REV
C		IPP Flexstorm HD Specifications	A
SCALE		SHEET 1 OF 1	

FRAMED INLET PROTECTION
N.T.S.

REV. 7–01–2019

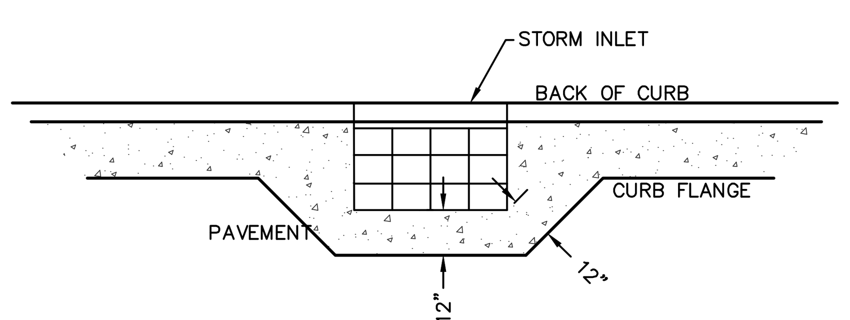

REV. 11–20–2018

CONCRETE INLET COLLAR
N.T.S.

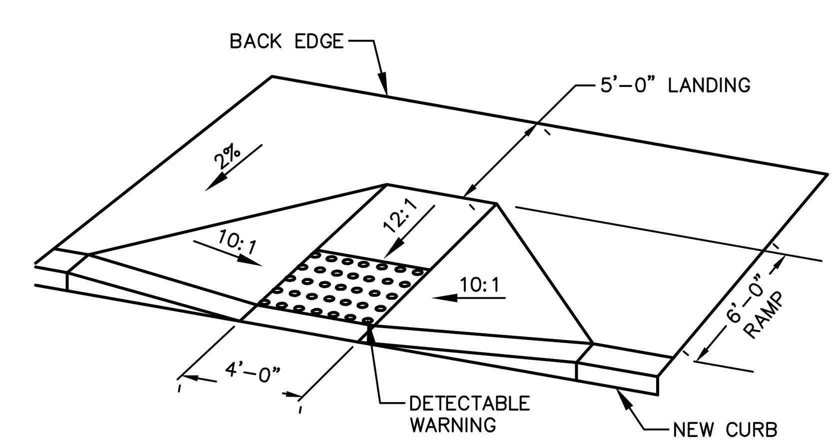

REV. 11–20–2018

ADA ACCESSIBLE RAMP - FLUSH
N.T.S.

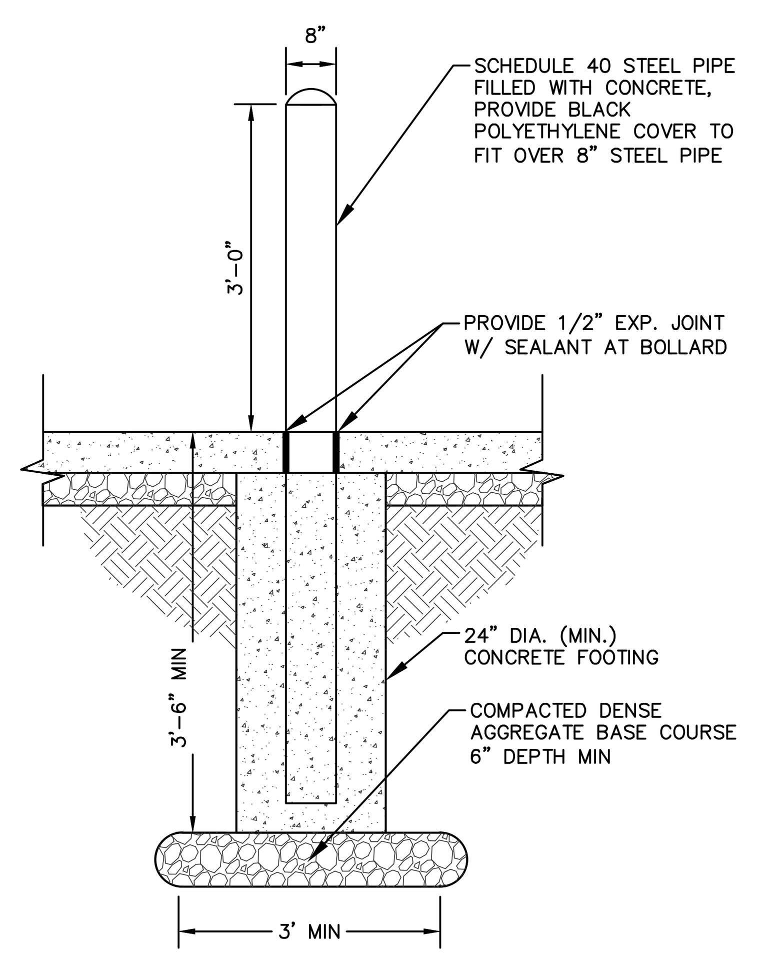

REV. 12–17–2018

CONCRETE BOLLARD
N.T.S.

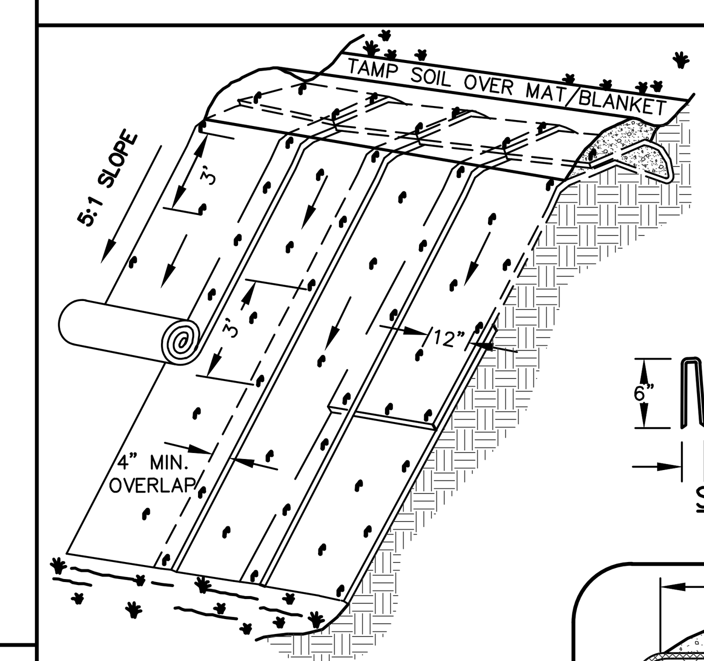

NOTE:
MATS/BLANKETS SHOULD BE INSTALLED VERTICALLY DOWNSLOPE.

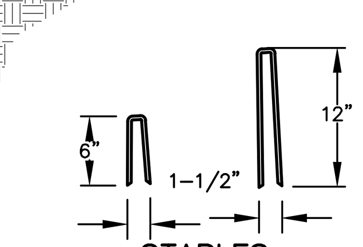

STAPLES

ISOMETRIC VIEW
TYPICAL SLOPE SOIL STABILIZATION

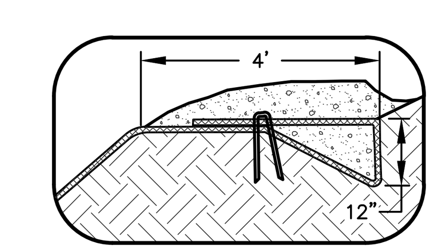

BERM

GENERAL NOTES:
1. EROSION MAT CONSTRUCTION SHALL BE IN ACCORDANCE WITH WISCONSIN DNR TECHNICAL STANDARD 1052 "NON–CHANNEL EROSION MAT".
2. ONLY WisDOT EROSION CONTROL PRODUCT ACCEPTABILITY LIST (PAL) APPROVED MATS SHALL BE ALLOWED. REFER TO EROSION CONTROL PLAN FOR EXACT MAT CLASSIFICATION.
3. APPLY PERMANENT SEEDING BEFORE PLACING BLANKETS.
4. LAY BLANKETS LOOSELY AND STAKE OR STAPLE TO MAINTAIN DIRECT CONTACT WITH THE SOIL. DO NOT STRETCH.
5. ONLY WisDOT EROSION CONTROL PRODUCT ACCEPTABILITY LIST (PAL) APPROVED MATS SHALL BE ALLOWED. REFER TO EROSION CONTROL PLAN FOR EXACT MAT CLASSIFICATION.

EROSION MATTING
N.T.S.

REV. 11–19–2018

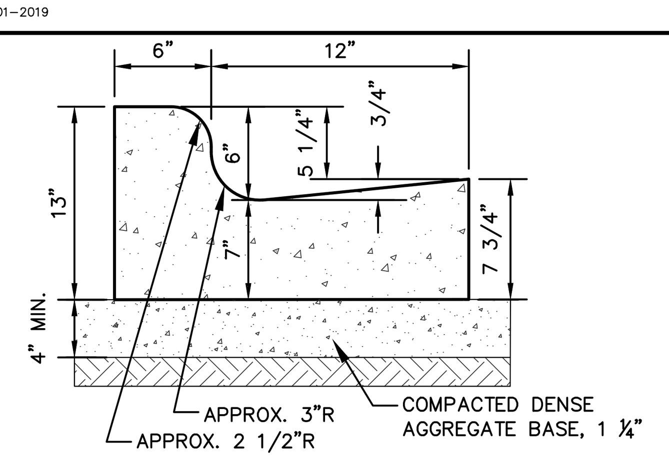

18" STANDARD CURB & GUTTER
N.T.S.

REV. 12–17–2018

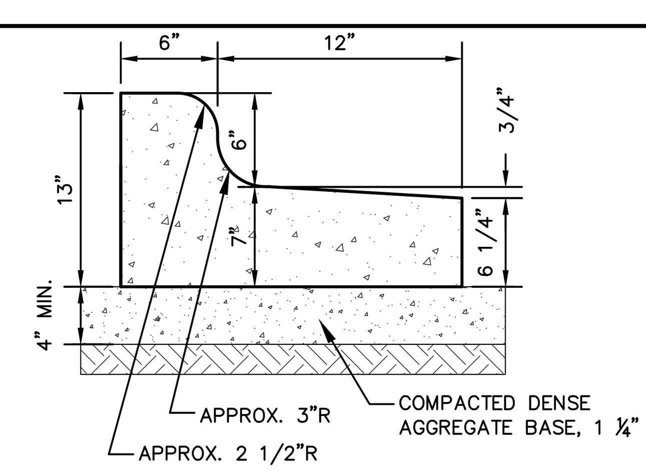

18" REJECT CURB & GUTTER
N.T.S.

REV. 12–17–2018

DIGGERS HOTLINE
Toll Free (800) 242-8511

JSD
CREATE THE VISION TELL THE STORY
jsdinc.com
MADISON REGIONAL OFFICE
161 HORIZON DRIVE, SUITE 101
VERONA, WISCONSIN 53593
P. 608.848.5060

CLIENT:
AARM GROUP STOUGHTON PROPERTIES LLC

CLIENT ADDRESS:
8605 W BRYN MOWN AVE, SUITE 309A
CHICAGO, IL 60631

PROJECT:
POPEYES RESTAURANT

PROJECT LOCATION:
LOT 7-1 KETTLE PARK WEST
STOUGHTON, DANE COUNTY
WI 53589

PLAN MODIFICATIONS:

#	Date:	Description:
1	04.25.22	SIP SUBMITTAL
2	05.03.22	RESPONSE TO COMMENTS
3		
4		
5		
6		
7		
8		
9		
10		
11		
12		
13		
14		
15		

Designed By: MSS
Reviewed By: MRH
Approved By: MRH

SHEET TITLE:
DETAILS

SHEET NUMBER:
C4.1

JSD PROJECT NO: 22-11344

THESE PLANS AND DESIGNS ARE COPYRIGHT PROTECTED AND MAY NOT BE USED IN WHOLE OR IN PART WITHOUT THE WRITTEN CONSENT OF JSD PROFESSIONAL SERVICES, INC.

File: I:\2022\2211344\DWG\Civil Sheets\2211344 Con Docs - Site.dwg Layout: C4.1 Details User: jwebb Plotted: May 03, 2022 - 10:38am Xref's:

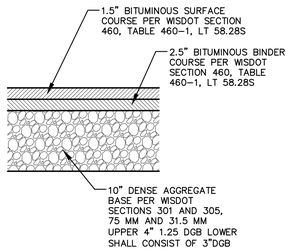

ASPHALT PAVEMENT SECTION

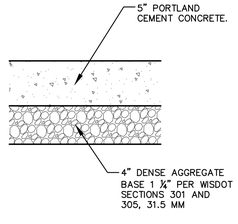

CONCRETE SIDEWALK SECTION

GENERAL NOTES:

1. REFER TO PAVEMENT RECOMMENDATIONS IN THE GEOTECHNICAL INVESTIGATION REPORT PREPARED FOR LOT 7-4, PREPARED BY CGC, INC PROJECT NUMBER C16528 DATED NOVEMBER 29, 2016. IF THERE ARE ANY DISCREPANCIES BETWEEN THIS DETAIL AND THE PAVEMENT RECOMMENDATIONS PROVIDED IN THE GEOTECHNICAL INVESTIGATION REPORT, THE GEOTECHNICAL REPORT SHALL GOVERN.
2. WISDOT STANDARD SPECIFICATIONS FOR HIGHWAY AND STRUCTURE CONSTRUCTION, INCLUDING SUPPLEMENTAL SPECIFICATIONS, COMPACTION REQUIREMENTS:
   - BITUMINOUS CONCRETE: REFER TO SECTION 460-3.
   - BASE COURSE: REFER TO SECTION 301.3.4.2, STANDARD COMPACTION.
3. CONCRETE EQUIPMENT PADS SHALL HAVE A MINIMUM 7" THICK PORTLAND CEMENTER CONCRETE OVER COMPACTED 4" THICK DENSE GRADED BASE WITH REINFORCEMENT FOR CRACK CONTROL.

PAVEMENT SECTIONS

N.T.S.

REV. 7-01-2019

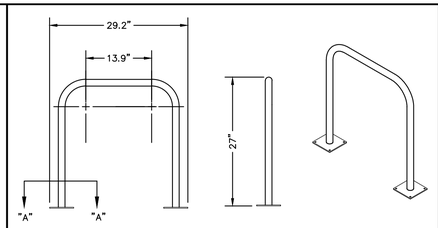

ELEVATION VIEW

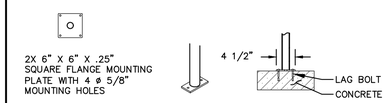

SURFACE FLANGE MOUNT (SF) SECTION VIEWS

GENERAL NOTES:

1. DO NOT SCALE DRAWING.
2. INSTALLATION TO BE COMPLETED IN ACCORDANCE WITH MANUFACTURER'S SPECIFICATIONS.

INVERTED-U BIKE RACK

N.T.S.

REV. 12-10-2018

FLEXSTORM PURE FILTERS FOR PERMANENT INLET PROTECTION PRODUCT SELECTION AND SPECIFICATION DRAWING

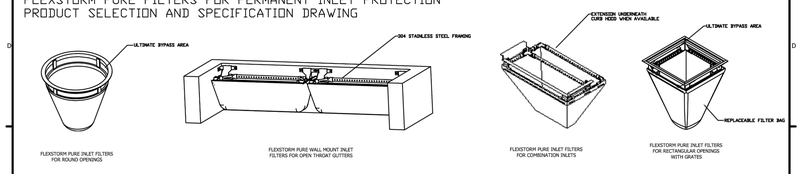

For Round Openings with Grates		Minimum Bypass Flow Rates (CFS)* Based on Nominal Frame Size with minimum 2" Bypass flow gap
Drop Thru Opening Size Dia	Flexstorm Frame P/N	
Small: 30.0" - 38.0"	62SHDR	1.6
Medium: 38.1" - 54.0"	62MHDR	2.7
Large: 54.1" - 96.0"	62LHDR	3.8

For Open Throat Curb Inlets - Mounted to Wall Beneath Curb Opening	
Curb Opening Size	Flexstorm Frame P/N
Up to 4' curb openings (1 Filter)	62HDWM1
Between 4' and 8' curb openings (2 Filters)	62HDWM2
Between 8' and 12' curb openings (3 Filters)	62HDWM3
Between 12' and 16' curb openings (4 Filters)	62HDWM4

For Rectangular/Square Openings with Grates			Minimum Bypass Flow Rates (CFS)* Based on Nominal Frame Size with minimum 2" Bypass flow gap
Clear Drop Thru Opening Size *(not grate or seat size)*	Flexstorm Frame P/N	Combination P/N	
Small: 13" x 13" up to 55" x 55" (or 64" max perimeter)	62SHD	62SHDCB	2.4
Medium: 18" x 18" up to 34" x 34" (or 80" max perimeter)	62MHD	62MHDCB	3.5
Large: 26" x 26" up to 30" x 80" (or 120" max perimeter)	62LHD	62LHDCB	5.0
XL: 33" x 33" up to 48" x 48" (or 192" max perimeter) top 2 pc set	62XLHD	62XLHDCB	7.2

CREATE YOUR ADS FLEXSTORM PART NUMBER BY COMBINING FRAME P/N AND BAG P/N

1. IDENTIFY YOUR FLEXSTORM FRAME PART NUMBER FROM TABLES ABOVE
2. SELECT YOUR BAG PART NUMBER BASED ON APPLICATION NEEDS

FLEXSTORM FILTER BAGS	(22" depth) STD Bag P/N	(12" depth) Short Bag P/N	Clean Water Flow Rate (GPM/SqFt)	Min A.O.S. (US Sieve)
FX: Standard Woven Bag	FX	FX-S	200	40
FX+: Woven w/ MyCelx	FXP	FXP-S	200	40
FXO: Woven w/ Oil Boom	FXO	FXO-S	200	40
PC: Post Construction Bag	PC	PC-S	137	140
PC+: PC Bag w/ MyCelx	PCP	PCP-S	137	140
LL: Litter and Leaf Bag	LL	LL-S	High	3.5
IL: IDOT Non-Woven Bag	IL	IL-S	145	70

3. CREATE YOUR FLEXSTORM INLET FILTER PART NUMBER

Frame P/N from Step 1.	Filter Bag P/N from Step 2.

SPECIFICATIONS FOR STANDARD BAGS BY NOMINAL BAG / FRAME SIZE

Nominal Bag Size *Matched to Frame Size*	Solids Storage (Cu/ft)	Filtered Flow Rate at 50% Max (CFS): FX (Woven)	PC (Post Constr)	IL (NonWoven)	* PC Oil Retention (Oz.)	**PC+ Oil Retention (Oz)	**FX+ Oil Retention (Oz)
Small	1.6	1.2	0.8	0.9	79	168	89
Medium	2.1	1.7	1.2	1.3	115	204	89
Large	3.8	2.7	1.8	1.9	173	262	89
XL	4.2	3.6	2.4	2.6	230	319	178
Filtration Efficiency		82%	NA	Large scale 3rd party testing per ASTM D 7351 using 7% concentration USDA Sandy Loam.			
TSS (total suspended solids rem)		NA	99%	Large Scale testing at 90 GPM using US Silica OK-110 sand at 1750 mg/L measuring TSS per SM 2540D.			
TPH (hot petroleum hydrocarbons)		NA	96%	Large Scale testing at 90 GPM with used motor oil at 243 mg/L measuring per EPA Method 1664A.			

* PC filter bag at 50% max adsorption capacity

** PC filter bag at 50% capacity and MyCelx skimmer at 100% capacity

NOTES:

1. ALL FRAMING IS CONSTRUCTED OF 304 STAINLESS STEEL FOR 25 YEAR SERVICE LIFE RATING
2. TOTAL BYPASS CAPACITY: BYPASS CAPACITY WILL VARY WITH EACH SIZE DRAINAGE STRUCTURE. FLEXSTORM DESIGNS FRAMING BYPASS TO MEET OR EXCEED THE DESIGN FLOW OF THE PARTICULAR DRAINAGE STRUCTURE.
3. UPON ORDERING CONFIRMATION OF THE DOT CALLOUT, PRECAST OR CASTING MAKE AND MODEL, OR DETAILED DIMENSIONAL FORMS MUST BE PROVIDED TO CONFIGURE AND ASSEMBLE YOUR CUSTOMIZED FLEXSTORM INLET FILTER. PART NUMBER ALONE IS NOT SUFFICIENT.
4. FOR WRITTEN SPECIFICATIONS AND MAINTENANCE GUIDELINES VISIT WWW.INLETFILTERS.COM

INSTALLATION:

1. REMOVE GRATE
2. DROP FLEXSTORM INLET FILTER ONTO LOAD BEARING LIP OF CASTING OR CONCRETE STRUCTURE
3. REPLACE GRATE

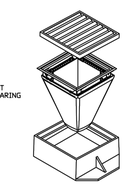

ALL PRODUCTS MANUFACTURED BY INLET & PIPE PROTECTION, INC A DIVISION OF ADS, INC.
WWW.INLETFILTERS.COM
(866) 287-8655 PH
(630) 355-3477 FX
INFO@INLETFILTERS.COM

SIZE	DWG NO	REV
C	FLEXSTORM_PURE	A
SCALE	SHEET 1 OF 1	

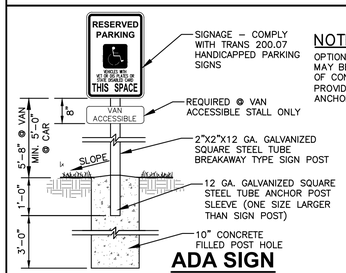

NOTE:
OPTION: DRIVEN POST MAY BE UTILIZED IN LIEU OF CONCRETE BASE. PROVIDE MIN. 3'-0" LONG ANCHOR POST SLEEVE.

ADA SIGN

N.T.S.

REV. 7-01-2019

NOTE:
CENTER AND/OR EQUALLY SPACE INTERMEDIATE POSTS.

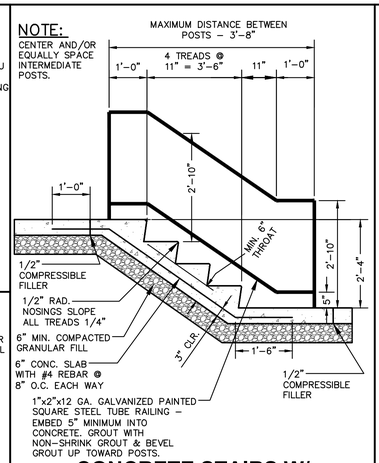

CONCRETE STAIRS W/ HANDRAIL

N.T.S.

REV. 11-20-2018

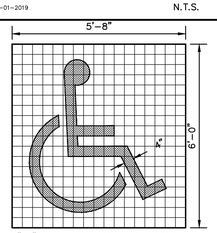

NOTE:
SYMBOL DETAILS ARE SHOWN FOR INTENT ONLY. CONTRACTOR SHALL VERIFY EXACT REQUIREMENTS PRIOR TO CONSTRUCTION.

4"x4" GRID FOR LAYOUT PURPOSES ONLY FOR ALL ACCESSIBLE AND VAN ACCESSIBLE SPACES

ADA PARKING STALL MARKING

N.T.S.

REV. 11-20-2018

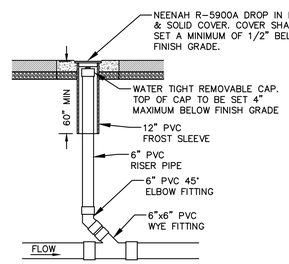

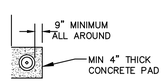

PLAN VIEW

Comm Table 82.35		
Dia of Lateral	Min Dia of Cleanout Riser	Min Dia of Riser Cap
1.5	1.5	1.5
2	1.5	1.5
3	3	2.5
4	4	3.5
5	5	4
6	6	5
8+	6	6

Neenah Grates
R-5900A 12-inch Pipe

NOTE:
CLEANOUT PIPING AND FITTINGS SHALL MATCH SANITARY SEWER LATERAL MATERIAL

SEWER CLEANOUT

N.T.S.

REV. 12-6-2018

DIGGERS HOTLINE
Toll Free (800) 242-8511

JSD
CREATE THE VISION TELL THE STORY
jsdinc.com

MADISON REGIONAL OFFICE
161 HORIZON DRIVE, SUITE 101
VERONA, WISCONSIN 53593
P. 608.848.5060

CLIENT:
AARM GROUP STOUGHTON PROPERTIES LLC

CLIENT ADDRESS:
8605 W BRYN MOWN AVE, SUITE 309A CHICAGO, IL 60631

PRELIMINARY NOT FOR CONSTRUCTION

PROJECT:
POPEYES RESTAURANT

PROJECT LOCATION:
LOT 7-1 KETTLE PARK WEST STOUGHTON, DANE COUNTY WI 53589

PLAN MODIFICATIONS:

#	Date:	Description:
1	04.25.22	SIP SUBMITTAL
2	05.03.22	RESPONSE TO COMMENTS
3		
4		
5		
6		
7		
8		
9		
10		
11		
12		
13		
14		
15		

Designed By:	MSS
Reviewed By:	MRH
Approved By:	MRH

SHEET TITLE:
DETAILS

SHEET NUMBER:
C4.2

JSD PROJECT NO: 22-11344

THESE PLANS AND DESIGNS ARE COPYRIGHT PROTECTED AND MAY NOT BE USED IN WHOLE OR IN PART WITHOUT THE WRITTEN CONSENT OF JSD PROFESSIONAL SERVICES, INC.

File: I:\2022\221344\DWG\Civil Sheets\221344 Con Docs - Site.dwg Layout: C4.2 Details User: jwebb Plotted: May 03, 2022 - 10:37am XrefS:

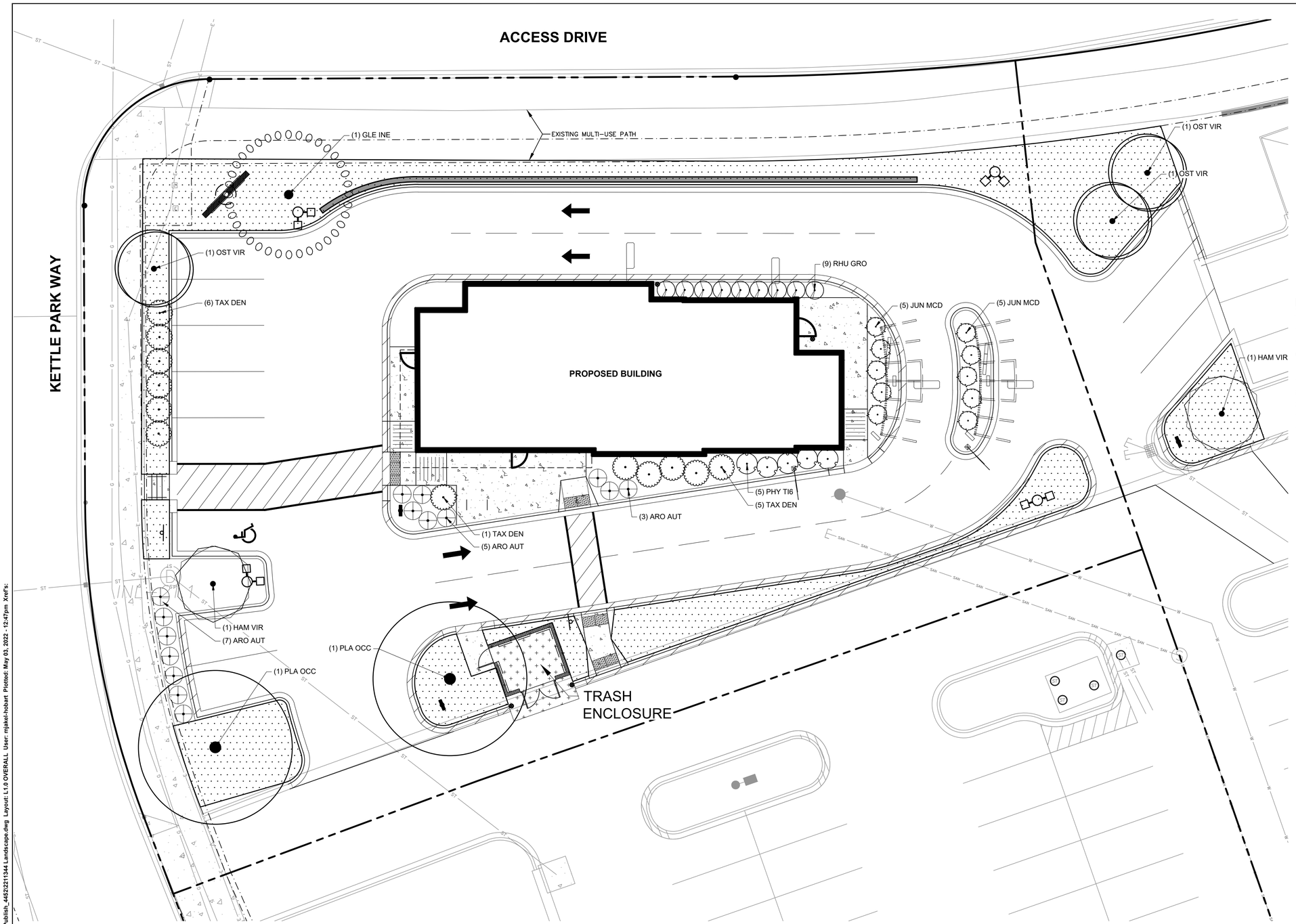

GENERAL NOTES

1. REFER TO THE EXISTING CONDITIONS SURVEY FOR EXISTING CONDITIONS NOTES AND LEGEND.
2. ALL WORK IN THE ROW SHALL BE IN ACCORDANCE WITH THE MUNICIPAL STANDARD SPECIFICATIONS FOR PUBLIC WORKS CONSTRUCTION.
3. JSD SHALL BE HELD HARMLESS AND DOES NOT WARRANT ANY DEVIATIONS BY THE OWNER/CONTRACTOR FROM THE APPROVED CONSTRUCTION PLANS THAT MAY RESULT IN DISCIPLINARY ACTIONS BY ANY OR ALL REGULATORY AGENCIES.
4. DRAWING FOR REVIEW – NOT FOR CONSTRUCTION UNLESS OTHERWISE NOTED IN THE TITLE BLOCK.
5. THE LANDSCAPE CONTRACTOR SHALL COORDINATE ALL FINE GRADING AND TOPSOILING WITH GENERAL CONTRACTOR
6. REFER TO "LANDSCAPE DETAILS AND NOTES" SHEET FOR ADDITIONAL DETAILS, NOTES AND SPECIFICATION INFORMATION INCLUDING MATERIALS, GUARANTEE AND EXECUTION RELATED TO LANDSCAPE PLAN
7. CONTRACTOR SHALL REVIEW SITE CONDITIONS FOR UTILITY CONFLICTS, DRAINAGE ISSUES, SUBSURFACE ROCK, AND PLANT PLACEMENT CONFLICTS PRIOR TO PLANT INSTALLATION. REPORT ANY CONDITIONS THAT MAY HAVE ADVERSE IMPACT ON PLANTING OPERATIONS TO LANDSCAPE ARCHITECT
8. DO NOT COMMENCE PLANTING OPERATIONS UNTIL ALL ADJACENT SITE IMPROVEMENTS, IRRIGATION INSTALLATION (IF APPLICABLE), AND FINISH GRADING ARE COMPLETE

LEGEND

- PROPERTY LINE
- RIGHT-OF-WAY
- EASEMENT LINE
- BUILDING OUTLINE
- PAVEMENT SETBACK LINE
- EDGE OF PAVEMENT
- STANDARD CURB AND GUTTER
- REJECT CURB AND GUTTER
- KENTUCKY BLUEGRASS BLEND
- CONCRETE PAVEMENT

north

SCALE IN FEET

10' 0 10'

DIGGERS HOTLINE

Toll Free (800) 242-8511

JSD

CREATE THE VISION TELL THE STORY

jsdinc.com

MADISON REGIONAL OFFICE
161 HORIZON DRIVE, SUITE 101
VERONA, WISCONSIN 53593
P. 608.848.5060

CLIENT:
AARM GROUP STOUGHTON PROPERTIES LLC

CLIENT ADDRESS:
8605 W BRYN MOWN AVE, SUITE 309A CHICAGO, IL 60631

PRELIMINARY NOT FOR CONSTRUCTION

PROJECT:
POPEYES RESTAURANT

PROJECT LOCATION:
LOT 7-1 KETTLE PARK WEST STOUGHTON, DANE COUNTY WI 53589

PLAN MODIFICATIONS:

#	Date:	Description:
1	04.25.22	SIP SUBMITTAL
2	05.03.22	RESPONSE TO COMMENTS
3		
4		
5		
6		
7		
8		
9		
10		
11		
12		
13		
14		
15		

Designed By:	MJH
Reviewed By:	KY
Approved By:	KY

SHEET TITLE:
LANDSCAPE PLAN

SHEET NUMBER:
L1.0

JSD PROJECT NO: 22-11344

THESE PLANS AND DESIGNS ARE COPYRIGHT PROTECTED AND MAY NOT BE USED IN WHOLE OR IN PART WITHOUT THE WRITTEN CONSENT OF JSD PROFESSIONAL SERVICES, INC.

File: C:\Users\mjakel-hobart\appdata\local\temp\Ac-Publish_44522211344 Landscape.dwg Layout: L1.0 OVERALL User: mjakel-hobart Plotted: May 03, 2022 - 12:47pm Xref's:

NOTE:

1. DIG HOLE NO DEEPER THAN BASE OF ROOT BALL TO FLARE. ROOT BALL TO BE SET ON UNDISTURBED SOIL UNLESS COMPACTED AGGREGATE STONE REMAINS FROM SITE EXCAVATOR. REMOVE REMAINING AGGREGATE STONE UNTIL SOIL LAYER IS REACHED.
2. TREE PIT DIAMETER SHALL BE AT LEAST TWO–TIMES ROOT BALL DIAMETER IN ALL DIRECTIONS. SLOPE SIDES OF TREE PIT FROM PROPOSED GRADE TO BOTTOM OF ROOT BALL IN ALL DIRECTIONS.

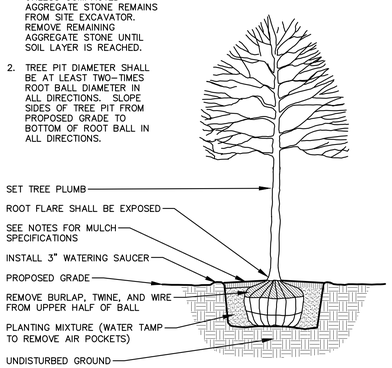

DECIDUOUS TREE PLANTING DETAIL

N.T.S.

REV. 10–29–2021

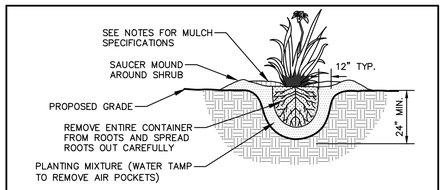

NOTE:

1. ROOT FLARE TO BE EXPOSED

PERENNIAL/ORNAMENTAL GRASS PLANTING DETAIL

N.T.S.

REV. 01–03–2019

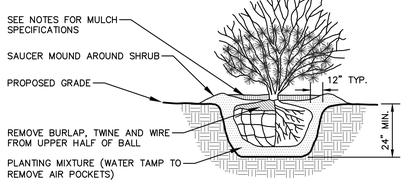

NOTE:

1. ROOT FLARE TO BE EXPOSED.

SHRUB PLANTING DETAIL

N.T.S.

REV. 01–03–2019

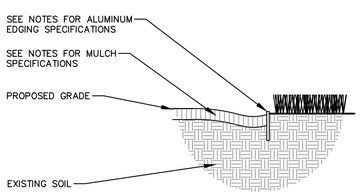

ALUMINUM LANDSCAPE EDGING DETAIL

N.T.S.

REV. 01–03–2019

LANDSCAPE POINTS REQUIREMENTS

POINT REQUIREMENT 1: BUILDING FOUNDATION REQUIREMENT

Zoning: Planned Business	Planned Business: 235 Linear Feet of Building Foundation
Calculation:	40 Landscape Points per 100 L.F.
Calculation Formula:	(235 Linear Feet of Building Foundation /100 Linear Feet) x 40 Points per 100 L.F.=93.6
Total Points Required:	**94 Total Points**
Total Points Provided:	**103 Total Points**
Code of Ordinances:	Minimum 6' Height Screening of Utilities, HVAC, no Climax or Tall Trees
	To be located a maximum of 10' from building dripline

Species: Common Name	Species: Scientific Name	QTY	POINTS	TOTAL POINTS
Tiny Wine Ninebark	PHYSOCARPUS opulifolius 'SMPOTW' TM	5	5	25
Dense Spreading Yew	TAXUS x media 'Densiformis'	6	5	30
Gro-Low Fragrant Sumac	RHUS aromatica 'Gro-Low'	9	1	9
Autumn Magic Chokeberry	ARONIA melanocarpa 'Autumn Magic'	8	3	24
Mini Arcade Juniper	JUNIPERUS sabina 'Mini Arcade'	5	3	15
			Total Points =	**103**

POINT REQUIREMENT 2: DEVELOPED LOTS (BUILDING SQ. FT.) REQUIREMENT

Zoning: Planned Business	Planned Business: 2,526 Sq. Ft. of Proposed Building Footprints
Calculation:	10 Landscape Points per 1,000 Sq. Ft. of Building Footprint
Calculation Formula:	(2,526 Sq. Ft. of Building Footprint / 1,000 Sq. Ft.) x 10 Points = 25.26
Total Points Required:	**26 Total Points**
Total Points Provided:	**26 Total Points**
Code of Ordinances:	Located away from and not contributing to Building Foundation Plantings.

Species: Common Name	Species: Scientific Name	QTY	POINTS	TOTAL POINTS
Autumn Magic Chokeberry	ARONIA melanocarpa 'Autumn Magic'	7	3	21
Common Witch Hazel	HAMAMELIS virginiana	1	5	5
			Total Points =	**26**

POINT REQUIREMENT 3: STREET FRONTAGE REQUIREMENT

Zoning: Planned Business	Planned Business: 370 Linear Feet of Street Frontage
Calculation:	40 Landscape Points per 100 L.F.
Calculation Formula:	(370 Feet of Street Frontage / 100 Linear Feet) x 40 Points per 100 L.F.= 148
Total Points Required:	**148 Total Points**
Total Points Provided:	**150 Total Points**
Code of Ordinances:	Min. 50% of Points to be Climax Trees or Tall Trees, Min. 30% of Points to be Medium Trees
	To be located a maximum of 10' from R-O-W; no shrubs used to meet requirement

Species: Common Name	Species: Scientific Name	QTY	POINTS	TOTAL POINTS
American Sycamore	PLATANUS occidentalis	1	75	75
Skyline Honeylocust	GLEDITSIA triacanthos f. inermis 'Skycole'	1	30	30
Ironwood	OSTRYA virginiana	3	15	45
			Total Points =	**150**

POINT REQUIREMENT 4: PAVED AREA REQUIREMENT

Zoning: Planned Business	10,056 Sq. Ft. of Pavement of Lot 7-1 Improvements
Calculation 1:	Greater of: 60 Landscape Points per 20 Stalls or 60 Points per 10,000 Sq. Ft. of Paved Area
Calculation 1 Formula:	(10,056 Sq. Ft. of Paved Area / 10,000 Sq. Ft.) x 60 Points = 60.34 OR (11 stalls / 20) x 60 points = 33
Total Points Required:	**61 Total Points**
Total Points Provided:	**125 Total Points**
Code of Ordinances:	Min. 30% of Points to be Climax Trees, Min. 40% of Points to be Shrubs

Species: Common Name	Species: Scientific Name	QTY	POINTS	TOTAL POINTS
American Sycamore	PLATANUS occidentalis	1	75	75
Dense Spreading Yew	TAXUS x media 'Densiformis'	6	5	30
Common Witch Hazel	HAMAMELIS virginiana	1	5	5
Mini Arcade Juniper	JUNIPERUS sabina 'Mini Arcade'	5	3	15
			Total Points =	**125**
			Total Project Points =	**404**

PLANT SCHEDULE

CLIMAX TREE	CODE	QTY	BOTANICAL / COMMON NAME	ROOT CONDITION	SIZE AT PLANTING
	PLA OCC	2	*Platanus occidentalis / American Sycamore*	B & B	2"Cal
MEDIUM DECIDUOUS TREE	**CODE**	**QTY**	**BOTANICAL / COMMON NAME**	**ROOT CONDITION**	**SIZE AT PLANTING**
	OST VIR	3	*Ostrya virginiana / American Hophornbeam*	#10/10 gal.	6` Tall
TALL DECIDUOUS TREE	**CODE**	**QTY**	**BOTANICAL / COMMON NAME**	**ROOT CONDITION**	**SIZE AT PLANTING**
	GLE INE	1	*Gleditsia triacanthos inermis 'Skycole' TM / Skyline Honey Locust*	B & B	1.5"Cal
LOW DECIDUOUS SHRUBS	**CODE**	**QTY**	**BOTANICAL / COMMON NAME**	**CONT**	**SIZE AT PLANTING**
	RHU GRO	9	*Rhus aromatica `Gro-Low` / Gro-Low Fragrant Sumac*	#03/3 gal.	18" Tall
LOW EVERGREEN SHRUBS	**CODE**	**QTY**	**BOTANICAL / COMMON NAME**	**CONT**	**SIZE AT PLANTING**
	JUN MCD	10	*Juniperus sabina 'Mini Arcade' / Mini Arcade Juniper*	#03/3 gal.	12" Tall/Wide
MEDIUM DECIDUOUS SHRUB	**CODE**	**QTY**	**BOTANICAL / COMMON NAME**	**CONT**	**SIZE AT PLANTING**
	ARO AUT	14	*Aronia melanocarpa `Autumn Magic` / Autumn Magic Black Chokeberry*	#05/5 gal.	24" Tall
	PHY TI6	5	*Physocarpus opulifolius `SMPOTW` TM / Tiny Wine Ninebark*	#05/5 gal.	24" Tall
MEDIUM EVERGREEN SHRUB	**CODE**	**QTY**	**BOTANICAL / COMMON NAME**	**CONT**	**SIZE AT PLANTING**
	TAX DEN	12	*Taxus x media 'Densiformis' / Dense Anglo-Japanese Yew*	#05/5 gal.	18" Tall/Wide
TALL DECIDUOUS SHRUBS	**CODE**	**QTY**	**BOTANICAL / COMMON NAME**	**CONT**	**SIZE AT PLANTING**
	HAM VIR	2	*Hamamelis virginiana / Common Witch Hazel*	#05/5 gal.	36" Tall

GENERAL NOTES

1. GENERAL: ALL WORK IN THE R–O–W AND PUBLIC EASEMENTS SHALL BE IN ACCORDANCE WITH LOCAL MUNICIPAL REQUIREMENTS. JSD SHALL BE HELD HARMLESS AND DOES NOT WARRANT ANY DEVIATIONS BY THE OWNER/CONTRACTOR FROM THE APPROVED CONSTRUCTION PLANS THAT MAY RESULT IN DISCIPLINARY ACTIONS BY ANY OR ALL REGULATORY AGENCIES. LOCATE ALL UTILITIES PRIOR TO CONSTRUCTION. THE CONTRACTOR IS RESPONSIBLE FOR REPAIRING ANY DAMAGE DONE TO UTILITIES. CONTRACTOR MUST CALL 1–800–242–8511 FOR UTILITY LOCATIONS AT LEAST THREE DAYS PRIOR TO DIGGING. HAND DIG AND INSTALL ALL PLANTS THAT ARE NEAR EXISTING UTILITIES. PROTECT PREVIOUSLY INSTALLED WORK OF OTHER TRADES. CONTRACTOR IS RESPONSIBLE FOR STAKING THE PLANT MATERIALS FOR REVIEW BY OWNER PRIOR TO DIGGING AND PLACEMENT AND SHALL COORDINATE ALL FINE GRADING AND RESTORATION WITH THE GRADING CONTRACTOR.
2. DELIVERY AND HANDLING: DO NOT DELIVER MORE PLANT MATERIALS THAN CAN BE PLANTED IN ONE DAY, UNLESS ADEQUATE, APPROPRIATE AND SECURE STORAGE IS PROVIDED AND APPROVED BY OWNER'S REPRESENTATIVE. AT ALL TIMES, PROTECT ALL PLANT MATERIALS FROM WIND AND DIRECT SUN. DELIVER PLANTS WITH LEGIBLE IDENTIFICATION LABELS. PROTECT PLANTS DURING DELIVERY AND DO NOT PRUNE PRIOR TO DELIVERY. ALL TREES AND SHRUBS SHALL BE PLANTED ON THE DAY OF DELIVERY; IF THIS IS NOT POSSIBLE, PROTECT THE PLANT MATERIALS NOT PLANTED BY STORING THEM IN A SHADED, SECURE AREA, PROTECTING THE ROOT MASS WITH WET SOIL, MULCH, HAY OR OTHER SUITABLE MEDIUM. CONTRACTOR TO KEEP ALL PLANT MATERIALS ADEQUATELY WATERED TO PREVENT ROOT DESICCATION. DO NOT REMOVE CONTAINER GROWN STOCK FROM CONTAINERS BEFORE TIME OF PLANTING. DO NOT PICK UP CONTAINER OR BALLED PLANTS BY STEM OR ROOTS. ALL PLANTS SHALL BE LIFTED AND HANDLED FROM THE BOTTOM OF THE CONTAINER OR BALL. PERFORM ACTUAL PLANTING ONLY WHEN WEATHER AND SOIL CONDITIONS ARE SUITABLE IN ACCORDANCE WITH LOCALLY ACCEPTED BEST HORTICULTURAL PRACTICES.
3. MATERIALS – PLANTS: ALL PLANTS SHALL CONFORM TO THE LATEST VERSION OF THE AMERICAN STANDARD FOR NURSERY STOCK ANSI Z60.1. PLANTS SHALL BE TRUE TO SPECIES AND VARIETY SPECIFIED AND NURSERY GROWN IN ACCORDANCE WITH GOOD HORTICULTURAL PRACTICES UNDER CLIMATIC CONDITIONS SIMILAR TO THOSE IN THE LOCALITY OF THE PROJECT FOR AT LEAST 2 YEARS. PLANTS SHALL BE FRESHLY DUG (DURING THE MOST RECENT FAVORABLE HARVEST SEASON). PLANTS SHALL BE SO TRAINED IN DEVELOPMENT AND APPEARANCE AS TO BE UNQUESTIONABLY SUPERIOR IN FORM, COMPACTNESS, AND SYMMETRY. PLANTS SHALL BE SOUND, HEALTHY, VIGOROUS, WELL BRANCHED AND DENSELY FOLIATED WHEN IN LEAF, AND FREE OF DISEASE AND INSECTS (ADULT EGGS, PUPAE OR LARVAE). THEY SHALL HAVE HEALTHY, WELL–DEVELOPED ROOT SYSTEMS AND SHALL BE FREE FROM PHYSICAL DAMAGE OR OTHER CONDITIONS THAT WOULD PREVENT THRIVING GROWTH OR PREMATURE MORTALITY. PLANTS SHALL BE OF THE HIGHEST QUALITY, POSSESS TYPICAL GROWTH HABITS AND FORM FOR THEIR SPECIES AND BE FREE OF INJURY. PARKWAY TREES AND PARKING LOT TREES SHALL HAVE A MINIMUM BRANCHING HEIGHT OF SIX (6) FEET ABOVE THE GROUND TO ALLOW ADEQUATE VISUAL AND PHYSICAL CLEARANCE.
4. PRUNING: THE CONTRACTOR SHALL PRUNE ALL TREES AND REPAIR ANY INJURIES THAT OCCURRED DURING THE PLANTING PROCESS. DOUBLE LEADERS, DEAD BRANCHES, AND LIMBS DAMAGED OR BROKEN DURING THE PLANTING PROCESS, SHALL BE PRUNED. THIS SHALL BE THE ONLY PRUNING ALLOWED AT PLANTING. PRUNING SHALL CONFORM TO THE LATEST VERSION OF THE AMERICAN STANDARD FOR TREE CARE OPERATIONS, ANSI A300. PRUNE TREES IN ACCORDANCE WITH NAA GUIDELINES. DO NOT TOP TREES. PRUNE SHRUBS ACCORDING TO STANDARD HORTICULTURAL PRACTICES. ON CUTS OVER 3/4" IN DIAMETER AND BRUISES OR SCARS ON BARK, TRACE THE INJURED CAMBIUM LAYER BACK TO LIVING TISSUE AND REMOVE. SMOOTH AND SHAPE WOUNDS SO AS NOT TO RETAIN WATER. TREAT THE AREA WITH AN APPROVED INCONSPICUOUS LATEX BASED ANTISEPTIC TREE PAINT, IF PRUNING OCCURS "IN SEASON". DO NOT PRUNE ANY OAK TREES DURING THE MONTHS FROM APRIL TO OCTOBER.
5. CLEANUP: THE WORK AREA SHALL BE KEPT SAFE AND NEAT AT ALL TIMES. DISPOSED OF EXCESS SOIL. REMOVE ALL CUTTINGS AND WASTE MATERIALS. SOIL AND BRANCHES. BIND AND WRAP THESE MATERIALS, ANY REJECTED PLANTS, AND ANY OTHER DEBRIS RESULTING FROM ALL PLANTING TASKS AND PROMPTLY CLEAN UP AND REMOVE FROM THE PROJECT SITE. UNDER NO CIRCUMSTANCES SHALL THE ACCUMULATION OF SOIL, BRANCHES OR OTHER DEBRIS BE ALLOWED UPON A PUBLIC PROPERTY IN SUCH A MANNER AS TO RESULT IN A PUBLIC SAFETY HAZARD OR DAMAGE. LIKEWISE, UNDER NO CIRCUMSTANCES SHALL ANY DEBRIS OR INCIDENTAL MATERIALS BE ALLOWED UPON ADJACENT PRIVATE PROPERTY.
6. ANY SUBSTITUTIONS IN PLANT TYPE, LOCATION, OR SIZE SHALL BE APPROVED BY LANDSCAPE ARCHITECT PRIOR TO INSTALLATION.
7. CONTRACTOR TO VERIFY PLANT MATERIAL QUANTITIES AND SQUARE FOOTAGES. QUANTITIES SHOWN ON PLAN TAKE PRECEDENCE OVER THOSE ON SCHEDULE.

LANDSCAPE MATERIAL NOTES

1. MATERIALS – PLANTING MIXTURE: ALL HOLES EXCAVATED FOR TREES, SHRUBS, PERENNIALS AND ORNAMENTAL GRASSES SHALL BE BACKFILLED WITH TWO (2) PARTS TOPSOIL, ONE (1) PART SAND AND ONE (1) PART COMPOST. SOIL MIXTURE SHALL BE WELL BLENDED PRIOR TO INSTALLATION.
2. MATERIALS – TOPSOIL: TOPSOIL TO BE CLEAN, FRIABLE LOAM FROM A LOCAL SOURCE, FREE FROM STONES OR DEBRIS OVER 3/4" IN DIAMETER, AND FREE FROM TOXINS OR OTHER DELETERIOUS MATERIALS. TOPSOIL SHALL HAVE A pH VALUE BETWEEN 6 AND 7. TOPSOIL AND PLANTING SOIL SHALL BE TESTED TO ENSURE CONFORMANCE WITH THESE SPECIFICATIONS AND SHALL BE AMENDED TO MEET THESE SPECIFICATIONS. PROVIDE TEST RESULTS TO OWNER'S REPRESENTATIVE PRIOR TO PLACEMENT. DO NOT PLACE FROZEN OR MUDDY TOPSOIL. APPLY SOIL AMENDMENTS TO ALL LANDSCAPE AREAS PER SOIL TEST.
3. MATERIALS – SHREDDED HARDWOOD BARK MULCH: ALL PLANTING AREAS LABELED ON PLAN SHALL RECEIVE CERTIFIED WEED FREE SHREDDED HARDWOOD BARK MULCH INSTALLED TO A MINIMUM AND CONSISTENT DEPTH OF 3–INCHES. SHREDDED HARDWOOD BARK MULCH SIZE & COLOR TO BE APPROVED BY OWNER'S REPRESENTATIVE PRIOR TO INSTALLATION. FERTILIZER SHALL BE IN ACCORDANCE WITH APPLICABLE LOCAL, COUNTY AND STATE REQUIREMENTS. SHREDDED HARDWOOD BARK MULCH AREAS SHALL NOT RECEIVE WOVEN WEED BARRIER FABRIC.
4. MATERIALS – TREE & SHRUB RINGS: ALL TREES AND/OR SHRUBS PLANTED IN SEEDED LAWN AREAS TO BE INSTALLED WITH A MINIMUM 4' DIAMETER SHREDDED HARDWOOD BARK MULCH TREE RING SPREAD TO A CONSISTENT DEPTH OF 3–INCHES. ALL TREE RINGS SHOULD BE INSTALLED WITH A 5" DEPTH SHOVEL CUT EDGE, ANGLED 45 DEGREES INTO SOIL AT A 5' DIAMETER ABOUT THE CENTER OF THE TREE PLANTING. A PRE–EMERGENT GRANULAR HERBICIDE WEED–PREVENTER SHOULD BE MIXED WITH MULCH USED TO INSTALL TREE RING AS WELL AS TOPICALLY APPLIED TO COMPLETED INSTALLATION OF TREE RING.
5. MATERIALS – TREE PROTECTION: ALL TREES TO BE INSTALLED WITH LDPE TREE GUARDS AS MANUFACTURED BY A.M. LEONARD HORTICULTURAL TOOL & SUPPLY CO., OR APPROVED EQUAL.
6. MATERIALS – ALUMINUM EDGING: EDGING SHALL BE 1/8" X 4", ALUMINUM EDGING, MILL FINISH. OWNER'S REPRESENTATIVE SHALL APPROVE PRODUCT SPECIFICATION PROVIDED BY LANDSCAPE CONTRACTOR.

CONTRACTOR AND OWNER RESPONSIBILITY NOTES

1. GUARANTEE: THE CONTRACTOR SHALL GUARANTEE ALL PLANTS THROUGH ONE (1) YEAR AFTER ACCEPTANCE BY THE OWNER'S REPRESENTATIVE. PLANTS SHALL BE ALIVE AND IN HEALTHY AND FLOURISHING CONDITION AT THE END OF THE GUARANTEE PERIOD. THE CONTRACTOR SHALL REPLACE (AT NO COST TO OWNER) ANY PLANTS THAT ARE DEAD OR NOT IN A VIGOROUS THRIVING CONDITION. REPLACEMENT PLANTS SHALL BE OF THE SAME KIND AND SIZE AS ORIGINALLY SPECIFIED UNLESS OTHERWISE DIRECTED BY OWNER'S REPRESENTATIVE. RESTORE BEDS AS NECESSARY FOLLOWING PLANT REPLACEMENT, INCLUDING BUT NOT LIMITED TO BEDDING, EDGING, MULCH, ETC. REPLACE PLANTS DAMAGED AT TIME OF PLANTING. REPAIR AREAS DISTURBED IN ANY WAY DURING PLANT REPLACEMENT AT NO COST TO OWNER. CONTRACTOR SHALL PROVIDE A ONE (1)–YEAR STRAIGHTENING GUARANTEE FOR ALL TREES.
2. CONTRACTOR IS RESPONSIBLE FOR STAKING THE PLANT MATERIALS FOR REVIEW BY OWNER'S REPRESENTATIVE PRIOR TO DIGGING AND PLACEMENT AND SHALL COORDINATE ALL FINE GRADING AND RESTORATION WITH THE GRADING CONTRACTOR.
3. MAINTENANCE: (CONTRACTOR) FOR ALL PLANTINGS, SEEDED AND/OR SODDED LAWN AREAS: THE CONTRACTOR SHALL MAINTAIN ALL PLANTINGS AND LAWN AREAS FOR A MINIMUM TIME PERIOD OF 60 DAYS, UNTIL FINAL ACCEPTANCE BY OWNER'S REPRESENTATIVE. THE CONTRACTOR IS RESPONSIBLE FOR ADEQUATELY WATERING PLANTS AND LAWN/TURFGRASS DURING THIS 60 DAY ESTABLISHMENT PERIOD. CONTRACTOR IS RESPONSIBLE FOR THE ESTABLISHMENT OF HEALTHY VIGOROUS PLANT MATERIALS AND LAWN/TURFGRASS GROWTH. CONTRACTOR IS ALSO RESPONSIBLE FOR ANY PRUNING OF PLANT MATERIALS, AND SHAPING AND/OR REPLACEMENT OR SUPPLEMENT OF DEFICIENT SHREDDED HARDWOOD BARK MULCH DURING THIS PERIOD. LONG TERM PLANT MATERIALS AND LAWN/TURFGRASS MAINTENANCE AND ANY PROGRAM FOR SUCH IS THE RESPONSIBILITY OF THE OWNER. ALL PLANTINGS AND LAWN/TURFGRASS AREAS SHALL BE MAINTAINED IN A MANICURED CONDITION UNTIL THE TIME WHEN THE OWNER'S ACCEPTANCE IS GIVEN.
4. MAINTENANCE: (OWNER) THE OWNER IS RESPONSIBLE FOR THE CONTINUED MAINTENANCE, REPAIR AND REPLACEMENT OF ALL LANDSCAPING MATERIALS AND WEED BARRIER FABRIC AS NECESSARY FOLLOWING THE ONE (1) YEAR CONTRACTOR GUARANTEE PERIOD.

DIGGERS HOTLINE
Toll Free (800) 242-8511

JSD
CREATE THE VISION TELL THE STORY
jsdinc.com
MADISON REGIONAL OFFICE
161 HORIZON DRIVE, SUITE 101
VERONA, WISCONSIN 53593
P. 608.848.5060

CLIENT:
AARM GROUP STOUGHTON PROPERTIES LLC

CLIENT ADDRESS:
8605 W BRYN MOWN AVE, SUITE 309A CHICAGO, IL 60631

PRELIMINARY NOT FOR CONSTRUCTION

PROJECT:
POPEYES RESTAURANT

PROJECT LOCATION:
LOT 7-1 KETTLE PARK WEST STOUGHTON, DANE COUNTY WI 53589

PLAN MODIFICATIONS:

#	Date:	Description:
1	04.25.22	SIP SUBMITTAL
2	05.03.22	RESPONSE TO COMMENTS
3		
4		
5		
6		
7		
8		
9		
10		
11		
12		
13		
14		
15		

Designed By:	MJH
Reviewed By:	KY
Approved By:	KY

SHEET TITLE:
LANDSCAPE NOTES & DETAILS

SHEET NUMBER:
L2.0

JSD PROJECT NO: 22-11344

THESE PLANS AND DESIGNS ARE COPYRIGHT PROTECTED AND MAY NOT BE USED IN WHOLE OR IN PART WITHOUT THE WRITTEN CONSENT OF JSD PROFESSIONAL SERVICES, INC.

File: C:\Users\mjakel-hobart\appdata\local\temp\AcPublish_44512\211344 Landscape.dwg Layout: L2.0 DETAILS User: mjakel-hobart Plotted: May 03, 2022 - 12:47pm XrefS:

WALL TYPE LEGEND

EX1

EXTERIOR WALL AT STUCCO (EIFS):
- STOTHERM C1 LOTUSAN EXTERIOR INSULATION FINISHING SYSTEM (EIFS): 1" EXPANDED POLYSTYRENE INSULATION BOARD W/ 1/4" BASE COAT, REINFORCING MESH AND 1/64" FINISH. (REFER TO EXTERIOR ELEVATIONS).
- STO GOLD COAT FLUID APPLIED MEMBRANE AIR BARRIER. ALL TRANSITIONS AT FOUNDATION, ROUGH OPENINGS, SHEATHING JOINTS, FLASHINGS, WALL PENETRATIONS AND PARAPETS TO BE SEALED W/ STO RAPID GUARD PER MANUFACTURERS SPECS PRIOR TO APPLICATION OF FLUID APPLIED MEMBRANE AIR BARRIER.
- 1 LAYER 1/2" EXTERIOR GRADE PLYWOOD
- 2"X6" WOOD STUDS @16" O.C.
- UNFACED BATT INSULATION (R-20) UP TO 10'-0" MAX C/W 2"X6" FIRE STOP.
- FSK FOIL FACED FLAME SPREAD 25 BATT INSULATION (R-20) FROM 10'-0" TO U/S OF DECK C/W 2"X6" FIRE STOP.
- UNFACED BATT INSULATION (R-20) FROM U/S OF DECK TO 18" MIN. ABOVE DECK.
- 1 LAYER OF 1/2" GYPSUM BOARD SHEATHING ON CONTINUOUS 6 MIL. POLYETHYLENE VAPOR BARRIER TO (U/S OF DECK).
- PROVIDE 1/2" CEMENTITIOUS BACKER BOARD INSTEAD OF PLYWOOD SHEATHING TO 12" ABOVE FLOOR SLAB C/W ACOUSTICAL SEALANT AT BASE.

NOTE:
1. PROVIDE DOUBLE LAYER OF REINFORCING MESH TO MIN. 2'-0" ABOVE GRADE AT ALL EIFS LOCATIONS.
2. G.C TO ENSURE DARK COLOURED EIFS NOT TO BE INSTALLED IN DIRECT SUNLIGHT (COORDINATE WITH MANUFACTURER)

EX2

EXTERIOR WALL AT NICHIHA SIDING (VINTAGEBRICK):
- NICHIHA VINTANGE BRICK: COLOR: ALEXANDRIA BUFF; 17 7/8" HIGH X 71 5/8" LONG X 7/8" THICK. COMES WITH STARTER TRACK AND JOINT CLIP.
- 1 LAYER 1/2" EXTERIOR GRADE PLYWOOD
- 2"X6" WOOD STUDS @16" O.C.
- STO GOLD COAT FLUID APPLIED MEMBRANE AIR BARRIER. ALL TRANSITIONS AT FOUNDATION, ROUGH OPENINGS, SHEATHING JOINTS, FLASHINGS, WALL PENETRATIONS AND PARAPETS TO BE SEALED W/ STO RAPID GUARD PER MANUFACTURERS SPECS PRIOR TO APPLICATION OF FLUID APPLIED MEMBRANE AIR BARRIER.
- 1 LAYER 1/2" EXTERIOR GRADE PLYWOOD
- 2"X6" WOOD STUDS @16" O.C.
- UNFACED BATT INSULATION (R-20) UP TO 10'-0" MAX C/W 2"X6" FIRE STOP.
- FSK FOIL FACED FLAME SPREAD 25 BATT INSULATION (R-20) FROM 10'-0" TO U/S OF DECK C/W 2"X6" FIRE STOP.
- UNFACED BATT INSULATION (R-20) FROM U/S OF DECK TO 18" MIN. ABOVE DECK.
- 1 LAYER OF 1/2" GYPSUM BOARD SHEATHING ON CONTINUOUS 6 MIL. POLYETHYLENE VAPOR BARRIER TO (U/S OF DECK).
- PROVIDE 1/2" CEMENTITIOUS BACKER BOARD INSTEAD OF GYPSUM BOARD TO 2'-0" ABOVE FLOOR SLAB C/W ACOUSTICAL SEALANT AT BASE.

EX3

EXTERIOR WALL AT NICHIHA SIDING (VINTAGEBRICK) EXTEND 9'-0" A.F.F.:
- NICHIHA VINTANGE BRICK: COLOR: ALEXANDRIA BUFF; 17 7/8" HIGH X 71 5/8" LONG X 7/8" THICK. COMES WITH STARTER TRACK AND JOINT CLIP. EXTEND 9'-0" A.F.F.
- STO GOLD COAT FLUID APPLIED MEMBRANE AIR BARRIER. ALL TRANSITIONS AT FOUNDATION, ROUGH OPENINGS, SHEATHING JOINTS, FLASHINGS, WALL PENETRATIONS AND PARAPETS TO BE SEALED W/ STO RAPID GUARD PER MANUFACTURERS SPECS PRIOR TO APPLICATION OF FLUID APPLIED MEMBRANE AIR BARRIER.
- 1 LAYER 1/2" EXTERIOR GRADE PLYWOOD EXTEND 9'-0" A.F.F.
- 2"X4" WOOD STUDS @16" O.C. EXTEND 9'-0"A.F.F.
- UNFACED BATT INSULATION (R-20) UP TO 10'-0" MAX C/W 2"X6" FIRE STOP.
- FSK FOIL FACED FLAME SPREAD 25 BATT INSULATION (R-20) FROM 10'-0" TO U/S OF DECK C/W 2"X6" FIRE STOP.
- UNFACED BATT INSULATION (R-20) FROM U/S OF DECK TO 18" MIN. ABOVE DECK.
- 1 LAYER OF 1/2" GYPSUM BOARD SHEATHING ON CONTINUOUS 6 MIL. POLYETHYLENE VAPOR BARRIER TO (U/S OF DECK).
- PROVIDE 1/2" CEMENTITIOUS BACKER BOARD INSTEAD OF PLYWOOD SHEATHING TO 12" ABOVE FLOOR SLAB C/W ACOUSTICAL SEALANT AT BASE.

EX4

EXTERIOR WALL AT NICHIHA SIDING (VINTAGEWOOD) EXTEND 9'-3" A.F.F.:
- NICHIHA VINTANGE WOOD: COLOR: CEDAR; 17 3/8" HIGH X 119 5/8" LONG X 7/8" THICK. COMES WITH STARTER TRACK AND JOINT CLIP. EXTEND 9'-3" A.F.F.
- STO GOLD COAT FLUID APPLIED MEMBRANE AIR BARRIER. ALL TRANSITIONS AT FOUNDATION, ROUGH OPENINGS, SHEATHING JOINTS, FLASHINGS, WALL PENETRATIONS AND PARAPETS TO BE SEALED W/ STO RAPID GUARD PER MANUFACTURERS SPECS PRIOR TO APPLICATION OF FLUID APPLIED MEMBRANE AIR BARRIER.
- 1 LAYER 1/2" EXTERIOR GRADE PLYWOOD EXTEND 9'-3" A.F.F.
- 2"X6" WOOD STUDS @16" O.C. EXTEND 9'-3"A.F.F.
- UNFACED BATT INSULATION (R-20) UP TO 10'-0" MAX C/W 2"X6" FIRE STOP.
- FSK FOIL FACED FLAME SPREAD 25 BATT INSULATION (R-20) FROM 10'-0" TO U/S OF DECK C/W 2"X6" FIRE STOP.
- UNFACED BATT INSULATION (R-20) FROM U/S OF DECK TO 18" MIN. ABOVE DECK.
- 1 LAYER OF 1/2" GYPSUM BOARD SHEATHING ON CONTINUOUS 6 MIL. POLYETHYLENE VAPOR BARRIER TO (U/S OF DECK).
- PROVIDE 1/2" CEMENTITIOUS BACKER BOARD INSTEAD OF PLYWOOD SHEATHING TO 12" ABOVE FLOOR SLAB C/W ACOUSTICAL SEALANT AT BASE.

EX5

EXTERIOR WALL AT NICHIHA SIDING (VINTAGEBRICK):
- NICHIHA VINTANGE BRICK: COLOR: WHITEWASH (SITE PAINT); 17 7/8" HIGH X 71 5/8" LONG X 7/8" THICK. COMES WITH STARTER TRACK AND JOINT CLIP.
- STO GOLD COAT FLUID APPLIED MEMBRANE AIR BARRIER. ALL TRANSITIONS AT FOUNDATION, ROUGH OPENINGS, SHEATHING JOINTS, FLASHINGS, WALL PENETRATIONS AND PARAPETS TO BE SEALED W/ STO RAPID GUARD PER MANUFACTURERS SPECS PRIOR TO APPLICATION OF FLUID APPLIED MEMBRANE AIR BARRIER.
- 1 LAYER 1/2" EXTERIOR GRADE PLYWOOD
- 2"X6" WOOD STUDS @16" O.C.
- UNFACED BATT INSULATION (R-20) UP TO 10'-0" MAX C/W 2"X6" FIRE STOP.
- FSK FOIL FACED FLAME SPREAD 25 BATT INSULATION (R-20) FROM 10'-0" TO U/S OF DECK C/W 2"X6" FIRE STOP.
- UNFACED BATT INSULATION (R-20) FROM U/S OF DECK TO 18" MIN. ABOVE DECK.
- 1 LAYER OF 1/2" GYPSUM BOARD SHEATHING ON CONTINUOUS 6 MIL. POLYETHYLENE VAPOR BARRIER TO (U/S OF DECK).
- PROVIDE 1/2" CEMENTITIOUS BACKER BOARD INSTEAD OF PLYWOOD SHEATHING TO 12" ABOVE FLOOR SLAB C/W ACOUSTICAL SEALANT AT BASE.

NOTE:
1. PROVIDE DOUBLE LAYER OF REINFORCING MESH TO MIN. 2'-0" ABOVE GRADE AT ALL EIFS LOCATIONS.
2. G.C TO ENSURE DARK COLOURED EIFS NOT TO BE INSTALLED IN DIRECT SUNLIGHT (COORDINATE WITH MANUFACTURER)

*NOTE:

"a" DENOTES 2 X 4 METAL STUDS

"b" DENOTES 2 X 6 METAL STUDS

"c" DENOTES 2 X 8 METAL STUDS

W1*
- 1/2" DUROCK NEXT GEN CEMENT BOARD UP TO 2'-0" A.F.F. AND 1/2" GYPSUM BOARD FROM 2'-0" A.F.F. TO U/S OF CEILING (PUBLIC AREA SIDE)
- METAL STUDS @ 16" O.C.
- 1/2" PLYWOOD BACKING (BETWEEN STUDS @ LOCATION OF WALL MOUNTED EQUIPMENTS)
- 1/2" CEMENTITIOUS BACKER BOARD (SERVICE AREA SIDE)

W2*
- 1/2" DUROCK NEXT GEN CEMENT BOARD UP TO 2'-0" A.F.F. AND 1/2" MOLD RESISTANT GYPSUM BOARD FROM 2'-0" A.F.F. TO 48" A.F.F. (SERVICE AREA SIDE)
- METAL STUDS @ 16" O.C.
- 1/2" PLYWOOD BACKING (BETWEEN STUDS @ LOCATION OF WALL MOUNTED EQUIPMENTS)
- 1/2" DUROCK NEXT GEN CEMENT BOARD UP TO 2'-0" A.F.F. AND 1/2" MOLD RESISTANT GYPSUM BOARD FROM 2'-0" A.F.F.TO 48" A.F.F.(KITCHEN SIDE)

W3*
- 1/2" DUROCK NEXT GEN CEMENT BOARD UP TO 2'-0" A.F.F. AND 1/2" GYPSUM BOARD FROM 2'-0" A.F.F. TO U/S OF CEILING (PUBLIC AREA SIDE)
- METAL STUDS @ 16" O.C.
- 1/2" PLYWOOD BACKING (BETWEEN STUDS @ LOCATION OF WALL MOUNTED EQUIPMENTS)
- 1/2" DUROCK NEXT GEN CEMENT BOARD UP TO 2'-0" A.F.F. AND 1/2" MOLD RESISTANT GYPSUM BOARD FROM 2'-0" A.F.F. (KITCHEN SIDE)

W4*
- 1/2" DUROCK NEXT GEN CEMENT BOARD UP TO 2'-0" A.F.F. AND 1/2" MOLD RESISTANT GYPSUM BOARD FROM 2'-0" A.F.F. (KITCHEN SIDE)
- 1/2" PLYWOOD BACKING(BETWEEN STUDS @ LOCATION OF WALL MOUNTED EQUIPMENTS)
- METAL STUDS @ 16" O.C.
- 1/2" PLYWOOD BACKING(BETWEEN STUDS @ LOCATION OF WALL MOUNTED EQUIPMENTS)
- 1/2" DUROCK NEXT GEN CEMENT BOARD UP TO 2'-0" A.F.F. AND 1/2" MOLD RESISTANT GYPSUM BOARD FROM 2'-0" A.F.F. (KITCHEN SIDE)

W5*
- 1/2" DUROCK NEXT GEN CEMENT BOARD (WASHROOM SIDE)
- 1/2" PLYWOOD BACKING (BETWEEN STUDS @ LOCATION OF WALL MOUNTED EQUIPMENTS)
- WOOD STUDS @ 24" O.C.
- 1/2" DUROCK NEXT GEN CEMENT BOARD UP TO 2'-0" A.F.F. AND 1/2" GYPSUM BOARD FROM 2'-0" A.F.F. TO U/S OF CEILING (PUBLIC AREA SIDE)

W6*
- 1/2" DUROCK NEXT GEN CEMENT BOARD (WASHROOM SIDE)
- 1/2" PLYWOOD BACKING (BETWEEN STUDS @ LOCATION OF WALL MOUNTED EQUIPMENTS)
- WOOD STUDS @ 24" O.C.
- 1/2" PLYWOOD BACKING (BETWEEN STUDS @ LOCATION OF WALL MOUNTED EQUIPMENTS)
- 1/2" DUROCK NEXT GEN CEMENT BOARD UP TO 2'-0" A.F.F. AND 1/2" MOLD RESISTANT GYPSUM BOARD FROM 2'-0" A.F.F. (KITCHEN SIDE)

W7*
- 1/2" DUROCK NEXT GEN CEMENT BOARD UP TO 2'-0" A.F.F. AND 1/2" GYPSUM BOARD FROM 2'-0" A.F.F. TO 29" A.F.F.(PUBLIC AREA SIDE)
- METAL STUDS @ 16" O.C.
- 1/2" PLYWOOD BACKING (BETWEEN STUDS @ LOCATION OF WALL MOUNTED EQUIPMENTS)
- 1/2" DUROCK NEXT GEN CEMENT BOARD UP TO 2'-0" A.F.F. AND 1/2" MOLD RESISTANT GYPSUM BOARD FROM 2'-0" A.F.F. (SERVICE AREA SIDE)

W8*
- 3/4" FIRE-RATED GYPSUM WALL BOARD EXTEND UP TO 6" ABOVE CEILING. (KITCHEN SIDE)
- 1/2" DUROCK NEXT GEN CEMENT BOARD UP TO U/S OF DECK.
- METAL STUDS @ 16" O.C. EXTEND UP TO U/S OF DECK.
- 1/2" DUROCK NEXT GEN CEMENT BOARD UP TO U/S OF DECK.
- 3/4" FIRE-RATED GYPSUM WALL BOARD EXTEND UP TO 6" ABOVE CEILING. (KITCHEN SIDE)

DOTTED LINE INDICATES LOCATION OF FIBREGLASS REINFORCED PANEL (FRP) LOCATION.

HIDDEN LINE INDICATES LOCATION OF BLOCKING IN BETWEEN THE STUDS FOR THE MILLWORK

NOTE:
1. PROVIDE FULL PLYWOOD BACKING INSTEAD OF DRYWALL IN BACK OF HOUSE WHERE PERMITTED BY CODE.
2. G.C TO ENSURE THE FOLLOWING SHOP DRAWINGS ARE SUBMITTED:
- BULKHEADS (FRONT COUNTER, MENU SCREEN & PUBLIC AREA SUSPENDED GB CEILING) (P. ENG. STAMPED)
- ROOF ACCESS LADDER/CAGE/ROOF HATCH (P. ENG. STAMPED)
- CURTAIN WALL (P. ENG. STAMPED)
- LIST OF HARDWARE / DOORS
- DRIVE THRU WINDOW
- ROOFING MATERIALS

REFER ALSO TO SPECIFICATION SECTIONS FOR SHOP DRAWINGS REQUIREMENTS.
3. PRIME CONSULTANT TO REQUEST THE FOLLOWING SHOP DRAWINGS TO THE RELATED VENDOR FOR REVIEW:
- REFRIGERATION BOXES
- MILLWORK
- GRAPHICS
4. REFER TO MECHANICAL, ELECTRICAL AND STRUCTURAL DRAWINGS FOR MECHANICAL, ELECTRICAL AND STRUCTURAL REQUIREMENTS.

GENERAL NOTES:

1. ALL INTERIOR NON-STRUCTURAL PARTITION SHALL BE 2 X 4 METAL STUDS @ 16" O.C. FROM SLAB TO 6" ABOVE FINISHED CEILING. UNLESS NOTED OTHERWISE. DIAGONALLY BRACE TOP OF WALL TO ROOF STRUCTURE AS REQUIRED TO SUPPORT ADDITIONAL LOADS.
2. REFER TO SITE PLAN FOR LOCATION & EXTENTS OF SIDEWALKS ETC.
3. ALL EXTERIOR WALLS SHALL BE FRAMED WITH 2 X6 STUDS @ 16" O.C. REFER TO STRUCTURAL DRAWINGS AND SPECIFICATIONS FOR LAYOUT, DIMENSIONS, DETAILS, MATERIAL INFORMATION & SPECIFIC STRUCTURAL DESIGN REQUIREMENTS.
4. G.C TO PROVIDE SOLID WOOD BLOCKING BEHIND ALL WALL MOUNTED FIXTURES AND ACCESSORIES.
5. FOR ANOMALIES, REFER TO WALL SECTIONS REFERENCE KEYED ON PLANS.
6. LOCATION OF CEMENTITIOUS BACKER BOARD INDICATES LOCATION OF WALL TILE FINISH. VERIFY WITH INT. ELEVATIONS ON SHEET A9 & A9.1 FOR WALL TILE LOCATIONS.
7. GYPSUM BOARD, PLYWOOD & CEMENTITIOUS BACKER BOARD TO EXTEND TO 4" ABOVE T-BAR CEILING & TO U/S OF CEILING IN LOCATIONS WITH GYPSUM BOARD CEILING.
1. REFER TO MANUFACTURE SPECIFICATIONS FOR ALL INSTALLATION PROCEDURE.
2. G.C TO PERFORM AN AIR BARRIER TEST (LEAKAGE TEST) ON THE BUILDING ENVELOPE PRIOR TO THE COMPLETION OF CONSTRUCTION, IN ACCORDANCE WITH THE NYS ENERGY CODE.
3. G.C TO SEAL/CAULK ALL BUILDING PENETRATIONS PRIOR TO PERFORMING AN AIR BARRIER TEST.
4. PROVIDE FIRE CAULKING ALL PIPES, CONDUITS, WIRES AND FRAMING PENETRATIONS THROUGH FIRE RATED SEPARATIONS. FIRE CAULK TOP & BOTTOM OF FIRE RATED SEPARATIONS. HILTI USA FS-ONE MAX FIRESTOP INTUMESCENT SEALANT, HILTI USA 1-800-879-8000 FIRE CAULK TOP & BOTTOM OF FIRE RATED SEPARATIONS.
5. G.C TO PROVIDE & INSTALL 1/2" CEMENTITIOUS BACKER BOARD INSTEAD OF GYPSUM BOARD TO 2-0" ABOVE FLOOR SLAB (FOR ALL INTERIOR PARTITIONS).
6. REFER TO STRUCTURAL DRAWINGS FOR SHEAR WALL LOCATIONS.

FLOOR PLAN NOTES

1. APPROXIMATE LOCATION OF FRONT COUNTER. CONSULT MILLWORK DRAWINGS FOR ACTUAL LOCATION. G.C TO ENSURE FLOOR TILE TRANSITION FALLS UNDERNEATH MILLWORK COUNTERS. G.C TO COORDINATE WITH MILLWORK COMPANY FOR ACTUAL LOCATION.
2. G.C TO PROVIDE AND INSTALL 2" X 2" (4FT LIGHT DUTY 20 GAUGE "#4 BRUSHED") S/S CORNER GUARDS FROM 4" A.F.F AND 1 1/2" X 1 1/2" PLASTIC CORNER GUARDS (FROM FRP SUPPLIER) FROM 4'-4" TO U/S OF CEILINGS AND BULKHEADS ON ALL OUTSIDE CORNERS.
3. G.C TO COORDINATE WITH UTILITY COMPANIES FOR PLACEMENT / LOCATION OF BOLLARDS . G.C TO PROVIDE 6" DIA. METAL BOLLARD FILL W/ CONCRETE AND PAINTED. REFER TO DETAIL 13/ASZ.3 & EXTERIOR ELEVATIONS A5 & A5.1.
4. PROVIDE PLYWOOD BACKING / BLOCKING IN WALL AS REQUIRED TO SUPPORT WALL MOUNTED ITEM.
5. N/A.
6. 6" DIA. METAL BOLLARD FILL W/ CONCRETE AND PAINTED. REFER TO DETAIL 13/AS2.3 & EXTERIOR ELEVATIONS A5 & A5.1.
7. NO TILE REQUIRED ON FLOOR AT FREEZER. FREEZER TO HAVE INSULATED FLOOR. G.C TO PROVIDE & INSTALL 2" RIGID INSULATION UNDER SLAB FOR ENTIRE AREA OF COOLER / FREEZER. G.C TO COORDINATE SIZE WITH WALK-IN MANUFACTURER.
8. PROVIDE 1/2" FIRE RATED PLYWOOD FROM FINISHED FLOOR TO 8'-0" BEHIND ELECTRICAL PANEL. PAINT PLYWOOD W/ 1 COAT OF PRIMERX PEEL BONDING PRIMER & 2 FINISH COATS OF WHITE LATEX PAINT W/ CLASS A RATING (BY SHERWIN WILLIAMS).
9. INTERIOR ROOF ACCESS LADDER AND ROOF HATCH. REFER TO DETAIL 1/A6.3.
10. 8" DEEP x 6" HIGH CONCRETE HOUSE KEEPING PAD @ LOCATION OF ELECTRICAL PANELS. PROVIDE TILE FINISH ON HORIZONTAL & VERTICAL SURFACES.
11. N/A.
12. HOT WATER TANK C/W EXPANSION TANK (IF REQUIRED) MOUNTED ABOVE MOP SINK. REFER TO MECHANICAL DRAWINGS.
13. G.C TO PROVIDE AND INSTALL SURFACE MOUNTED MOP SINK. WALLS AROUND MOP SINK TO RECEIVE 1/2" CEMENTITIOUS BACKER BOARD FROM FLOOR TO 4'-0" A.F.F. REFER TO MECHANICAL DWGS.
14. G.C. TO SUPPLY AND INSTALL SOUND BATT INSULATION ON ALL PUBLIC WASHROOM WALLS.
15. GAS METER. REFER TO MECHANICAL DRAWINGS. COORDINATE LOCATION WITH CIVIL DRAWINGS AND LOCAL UTILITY COMPANY.
16. FURR OUT WALL W/ 1 LAYER 5/8" PLYWOOD SHEATHING ON 2"X6" WOOD STUDS @ 16" O.C. CARRY STUDS & PLYWOOD SHEATHING TO 6" ABOVE CEILING.
17. WALL TO BE COMPLETE W/ 1 LAYER 5/8" DUROCK NEXT GEN CEMENT BOARD ON 2"X6" METAL STUDS @ 16" O.C. CARRY STUDS & CEMENT BOARD TO 6" ABOVE CEILING.
18. PROVIDE PROPER NON-COMBUSTIBLE SUPPORT IN WALL AS REQUIRED TO SUPPORT EXHAUST HOOD. COORDINATE WITH HOOD VENDOR.
19. N/A.
20. INSTALL FLOOR TILE AFTER INSTALLATION OF COOLER UNIT. G.C TO COORDINATE WITH COOLER/ FREEZER MANUFACTURER.
21. N/A.
22. PROVIDE & INSTALL SCHLUTER STRIP AT TILED CORNERS. REFER TO SHEET A10 FOR SPECIFICATIONS.
23. WATER FILTRATION SYSTEM BY EQUIPMENT SUPPLIER. REFER TO MEP DRAWINGS. WATER FILTRATION SYSTEM TO BE INSTALLED TIGHT AGAINST THE CORNER.
24. REFER TO SHEET A9.3 FOR WASHROOM ELEVATIONS.
25. DASHED LINE INDICATES LOCATION OF FIXED SEATING. REFER TO MILLWORK DRAWINGS.
26. PROVIDE BACKING/BLOCKING IN WALL AS REQUIRED TO SUPPORT WALL MOUNTED LED SCREENS.
27. DASHED LINE INDICATES LOCATION OF FROST SLAB (FOR COLDER CLIMATE REGIONS). REFER TO STRUCTURAL DRAWINGS FOR SIZE.
28. 1/2" CEMENT BOARD EXTEND 24" A.F.F AND 1/2" GYPSUM WALL BOARD ABOVE ON 3 5/8" METAL STUDS.
29. G.C TO PROVIDE LEVEL 5 DRYWALL FINISH (AT A LOCATION BEHIND WALL GRAPHIC) C/W 2 COATS OF PRIMER OR 1 COAT OF LATEX PAINT.
30. N/A.
31. WALL MOUNTED FIRE EXTINGUISHER TO BE SUPPLY AND INSTALL BY G.C. G.C. TO VERIFY LOCATION WITH FIRE MARSHALL.
32. SEMI- RECESSED FIRE EXTINGUISHER AND CABINET. REFER TO INTERIOR ELEVATION 5/A9.
33. PROVIDE PLYWOOD BEHIND PORTAL OFFICE CABINET. REFER TO INTERIOR ELEVATION 12/A9.1.
34. N/A.
35. N/A.
36. DRIVE THRU WINDOW SUPPLY AND INSTALL BY G.C.
37. PROVIDE MIN. 2" AIR SPACE BETWEEN COOLER / FREEZER AND FACE OF WALL.
38. N/A.
39. COOLER / FREEZER UNIT PROVIDED & INSTALLED BY MANUFACTURER. INTERIOR RAMP TO BE PROVIDED INSIDE FREEZER UNIT BY MANUFACTURER. G.C TO COORDINATE.
40. 6" METAL STUD @ 16" O.C. FURR-OUT WALL COMPLETE WITH 1/2" CEMENT BOARD EXTEND 24" A.F.F. AND 1/2" GWB EXTEND TO 6" ABOVE CEILING. PROVIDE PLYWOOD SHEATHING IN BETWEEN STUDS.
41. CROSS HATCH INDICATES LOCATION OF SHEAR WALLS. REFER TO STRUCTURAL DRAWINGS.
42. 3 5/8" METAL STUD @ 16" O.C. FURR-OUT WALL COMPLETE WITH 1/2" CEMENT BOARD EXTEND 24" A.F.F. AND 1/2" GWB EXTEND TO 6" ABOVE CEILING. PROVIDE PLYWOOD SHEATHING IN BETWEEN STUDS.
43. N/A.
44. N/A.
45. G.C TO PROVIDE AND INSTALL S/S PANELS BEHIND AND BESIDE FRY STATION AS INDICATED. REFER TO DETAIL 1/A8 AND INTERIOR ELEVATIONS 9/A9.1.
46. N/A.
47. RAIN WATER LEADER. REFER TO PLUMBING DRAWINGS.
48. WATER METER AND BACK FLOW PREVENTER. REFER TO PLUMBING DRAWINGS. EXACT LOCATION OF WATER METER TO BE COORDINATED WITH CIVIL PLANS.

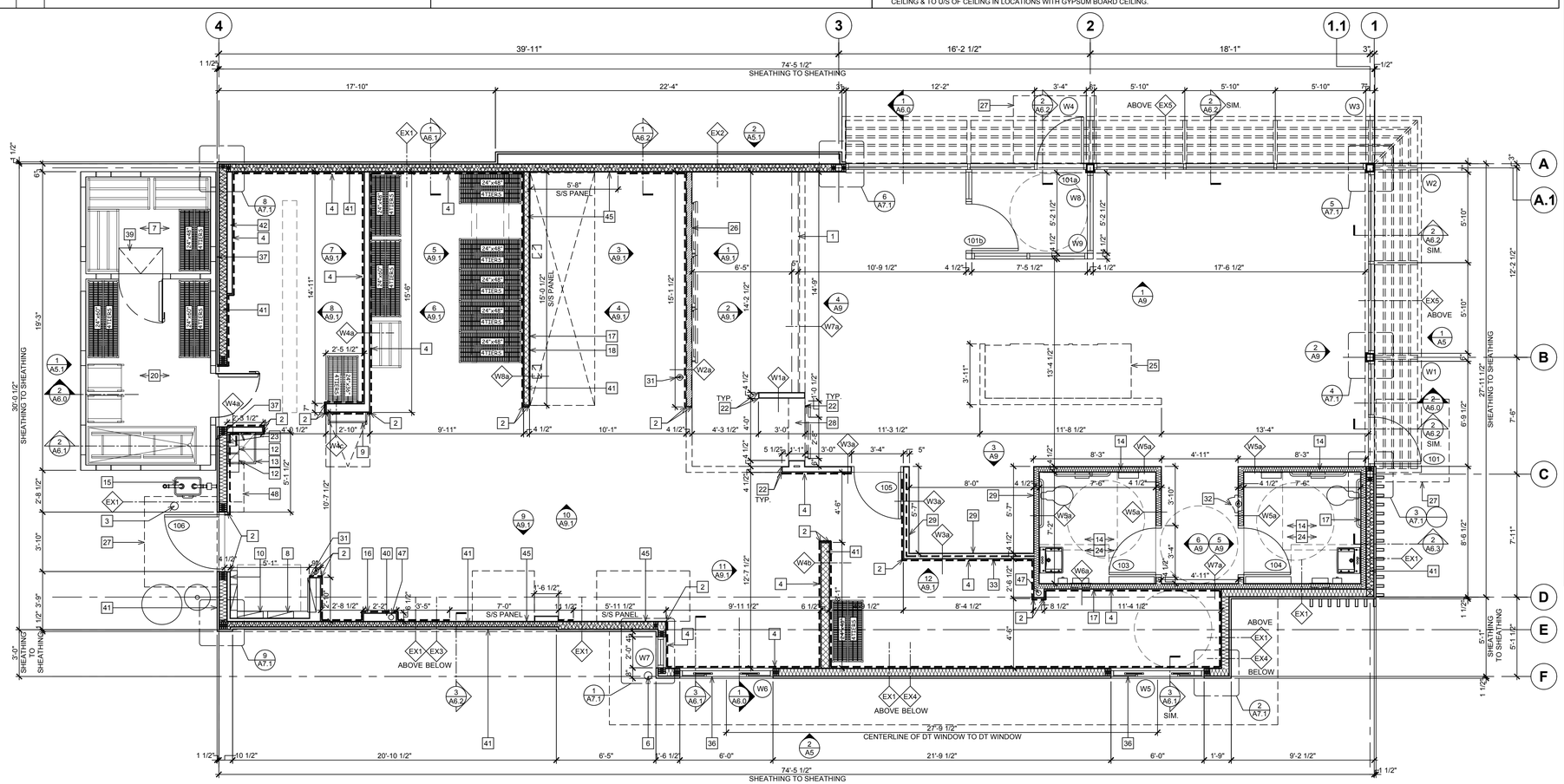

FLOOR PLAN

SCALE: 1/4" = 1'-0"

GLEASON ARCHITECTS, P.C.
769 Heartland Drive, Unit A
Sugar Grove, Illinois 60554
Phone: 630-466-8740
Fax: 630-466-8760
E-mail: thadgleason@gleasonarchitectspc.com

THESE DRAWINGS, INCLUDING ALL DESIGNS, DETAILS, SPECIFICATIONS AND INFORMATION, ARE THE SOLE PROPERTY AND COPYRIGHT OF GLEASON ARCHITECTS, P.C. AND ARE FOR USE ON THIS SPECIFIC PROJECT AND SHALL NOT BE USED ON ANY OTHER WORK WITHOUT THE AGREEMENT AND WRITTEN PERMISSION OF GLEASON ARCHITECTS, P.C.

ISSUED	DATE
FOR APPROVAL	
FOR PERMIT	12/17/13
FOR BID	
FOR CONST.	

REVISIONS	DATE
1	
2	
3	

PROJECT:
Popeyes LK
Lot 7-1 Kettle Park
Stoughton, WI

CLIENT:
Ryan Matthews

JOB NO.
DATE 02/23/2022
FILE
PLOT SCALE 1:1

OWNER APPROVAL

Signature

Date

SHEET TITLE
FLOOR PLAN

SHEET NUMBER
A2.1

Popeye's LK

Lot 7 Kettle Park Subdivision
Stoughton, WI

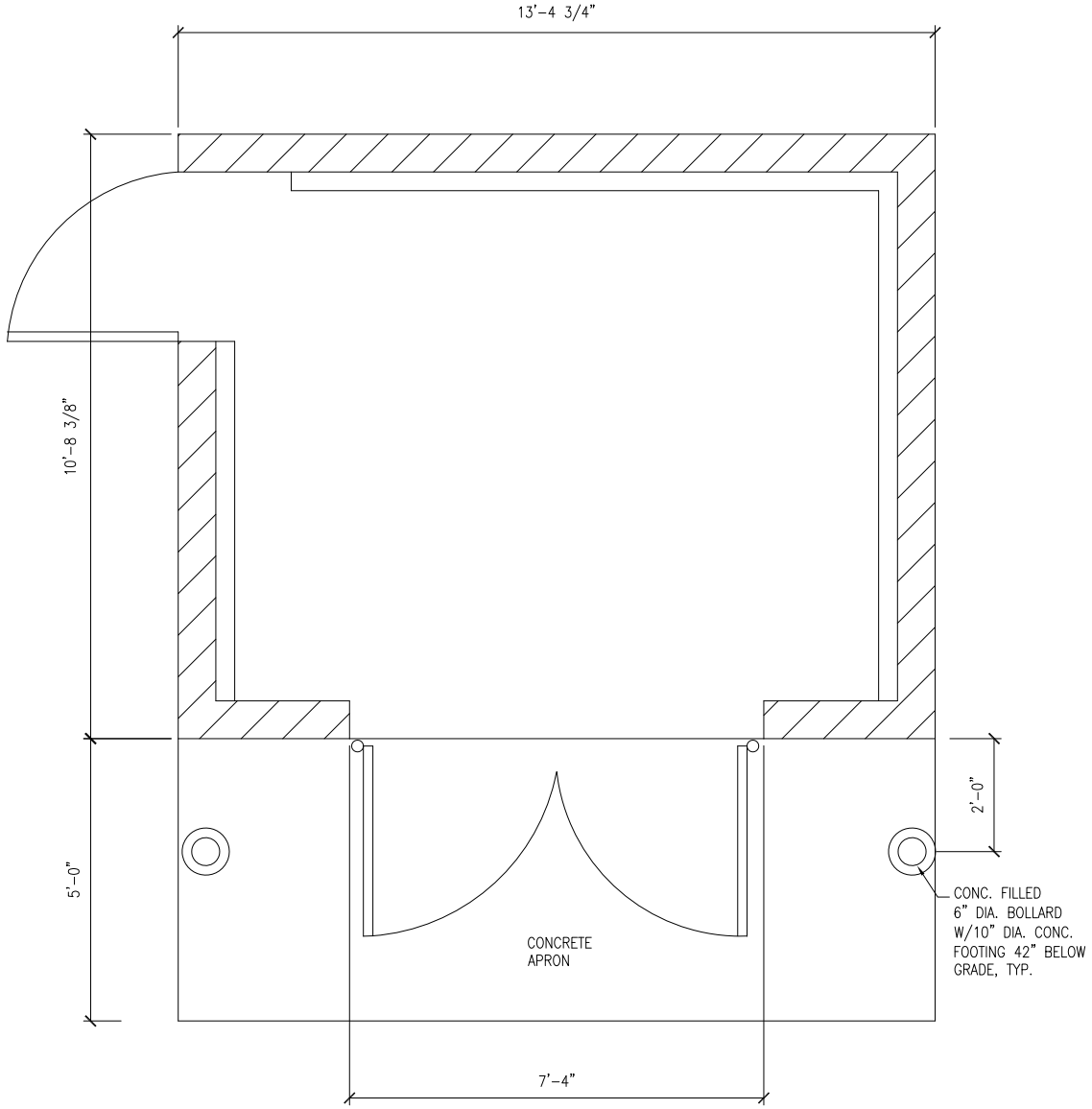

PRELIMINARY SCHEMATIC DESIGN.
COPYRIGHT 2020 GLEASON ARCHITECTS, P.C.
DATE: 5/3/2022
JOB NUMBER:

GLEASON ARCHITECTS, P.C.

769 Heartland Drive, Unit A Sugar Grove, Illinois
Phone: 630-466-8740 Fax: 630-466-8760

Popeye's LK

Lot 7 Kettle Park Subdivision
Stoughton, WI

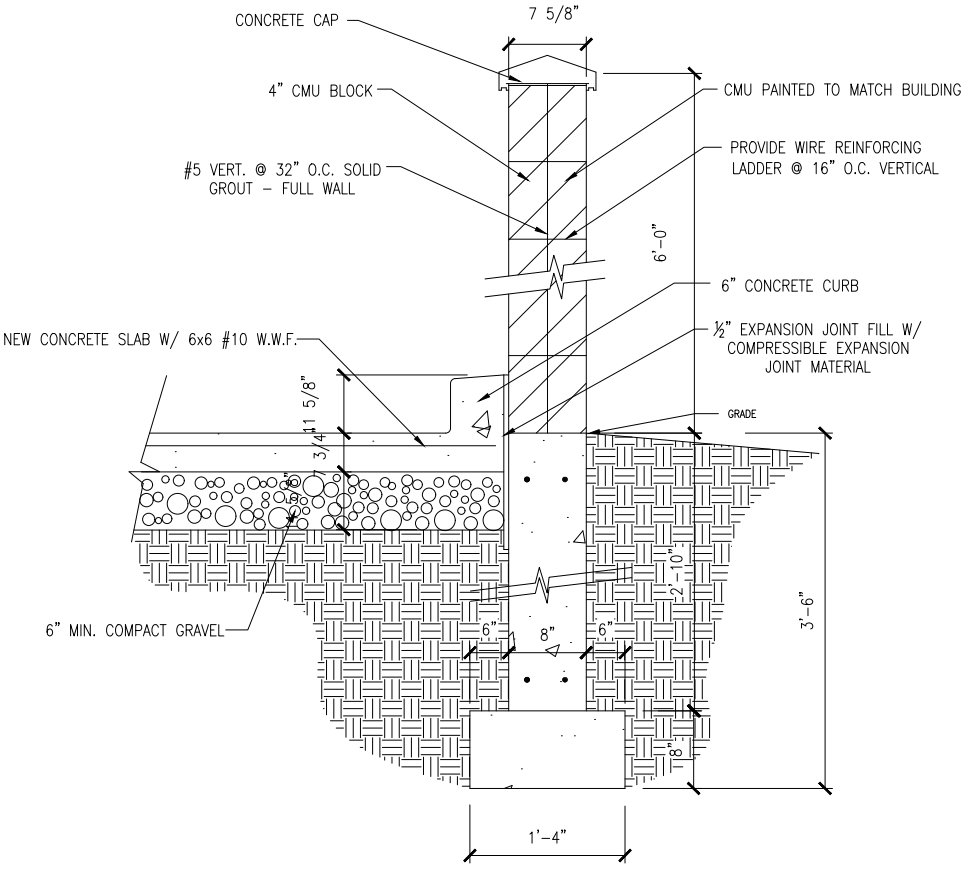

PRELIMINARY SCHEMATIC DESIGN.
COPYRIGHT 2020 GLEASON ARCHITECTS, P.C.
DATE: 4/22/2022
JOB NUMBER:

GLEASON ARCHITECTS, P.C.

769 Heartland Drive, Unit A Sugar Grove, Illinois
Phone: 630-466-8740 Fax: 630-466-8760

Popeye's LK

Lot 7 Kettle Park Subdivision
Stoughton, WI

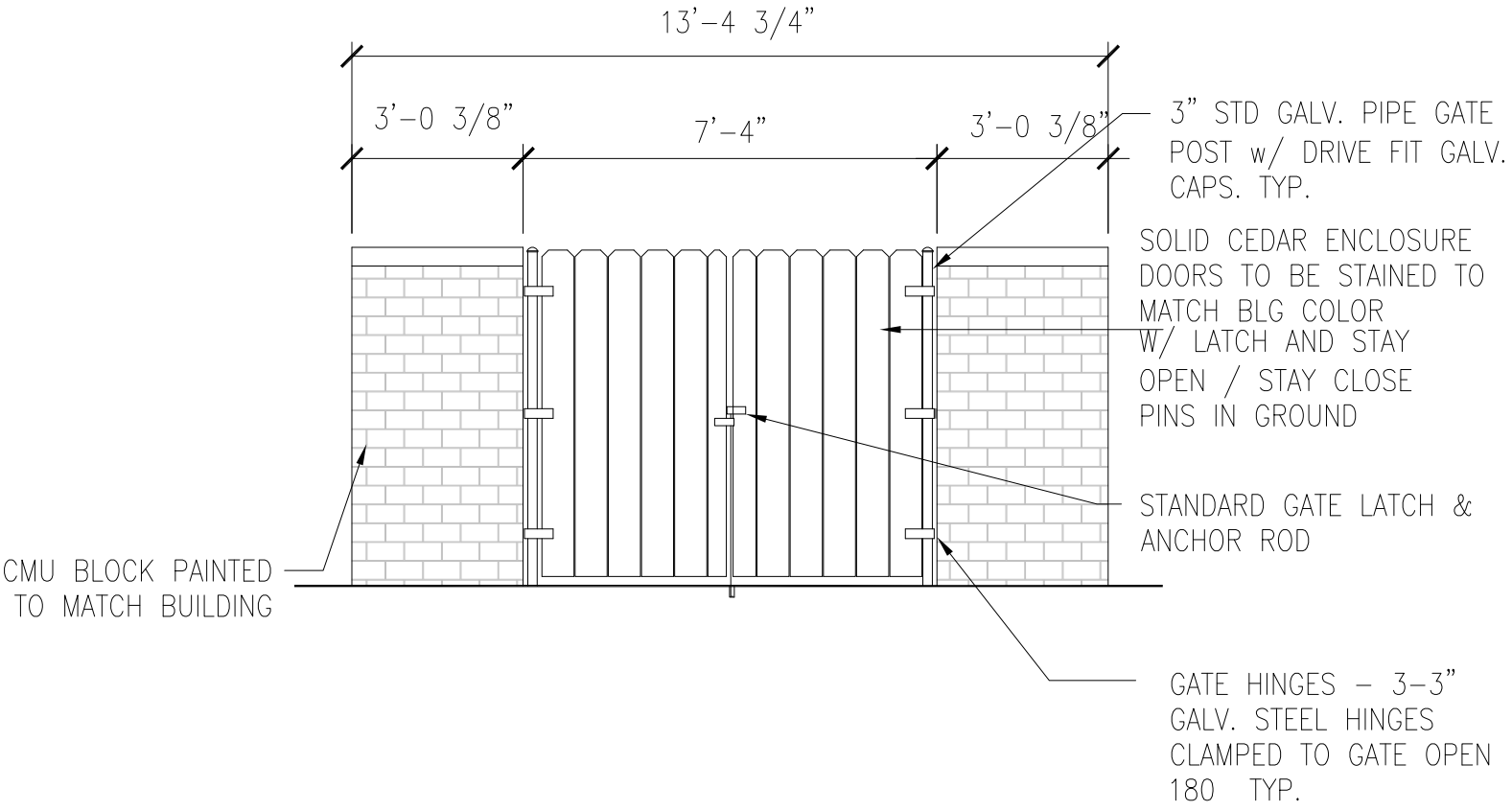

PRELIMINARY SCHEMATIC DESIGN.
COPYRIGHT 2020 GLEASON ARCHITECTS, P.C.
DATE: 5/3/2022
JOB NUMBER:

GLEASON ARCHITECTS, P.C.
769 Heartland Drive, Unit A Sugar Grove, Illinois
Phone: 630-466-8740 Fax: 630-466-8760

Luminaire Schedule

Symbol	Qty	Label	Arrangement	LMF	Lum. Lumens	Lum. Watts	Part Number
	1	4M-2(180)	2 @ 180°	1.000	22100	132	OSQL-B-22L-57K7-4M-UL-NM-BZ w/OSQ-ML-B-AA-BZ
	3	4M-2(90)	2 @ 90°	1.000	22100	132	OSQL-B-22L-57K7-4M-UL-NM-BZ w/OSQ-ML-B-AA-BZ

Calculation Summary; 1.00 LLF

Label	Units	Avg	Max	Min	Avg/Min	Max/Min
All Calc Points	Fc	2.04	9.2	0.0	N.A.	N.A.
Paved Parking	Fc	5.33	9.2	1.2	4.44	7.67

Fixture Mounting Height: 27' AFG (25' Pole + 2.0' Base)

Pole Schedule
(4) CL-SSP-4011-25-OT-BZ (25' x 4" x 11ga; STEEL SQUARE POLE, Tenon)

Proposed poles meet 100 MPH sustained winds.

Additional Equipment:
(8) OSQ-ML-B-AA-BZ (Adjustable Arm Mount)
(4) PB-2A4 (Twin Head Tenon)

*** CUSTOMER TO VERIFY ORDERING INFORMATION AND CATALOGUE NUMBER PRIOR TO PLACING ORDER ***

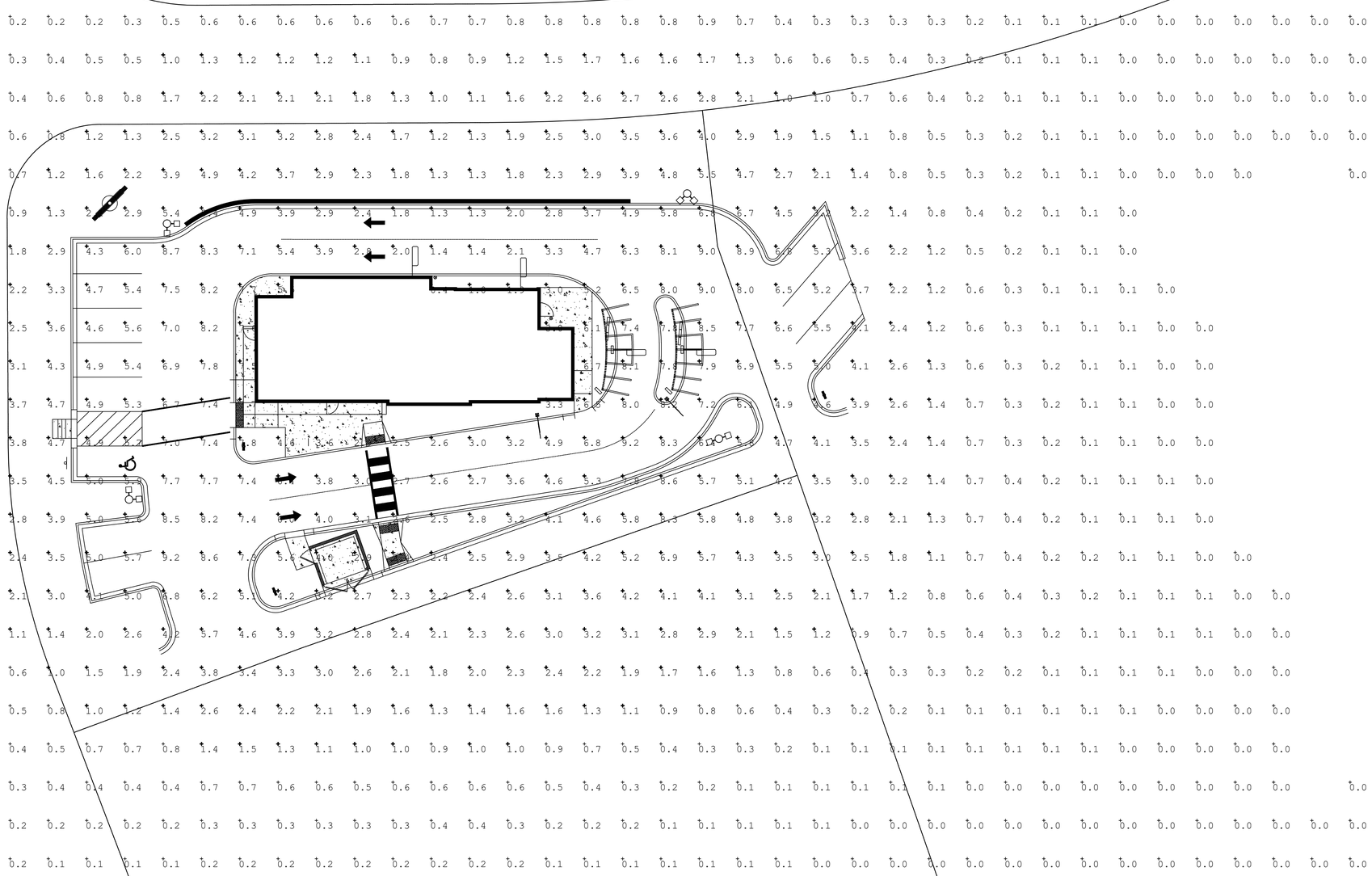

OSQ Series

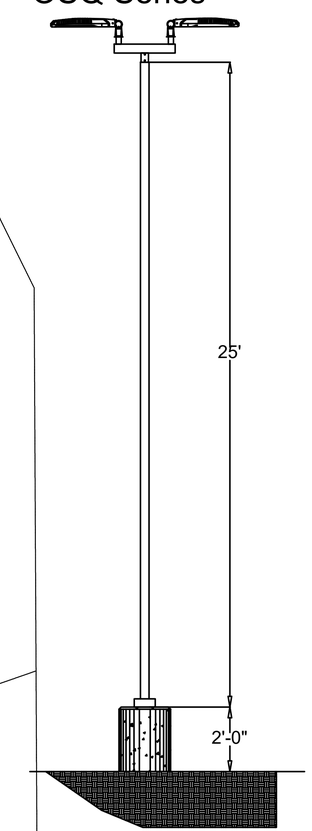

CREE LIGHTING
A COMPANY OF *IDEAL INDUSTRIES, INC.*
9201 Washington Ave, Racine, WI 53406 https://creelighting.com - (800) 236-6800

Illumination results shown on this lighting design are based on project parameters provided to Cree Lighting used inconjunction with luminaire test procedures conducted under laboratory conditions. Actual project conditions differing from these design parameters may affect field results. The customer is responsible for verifying dimensional accuracy along with compliance with any applicable electrical, lighting,or energy code.

Project Name: Popeyes Lot 7 Stoughton, WI - EXT

Case #: 00491901 | Footcandles calculated at grade | Filename: POP-220419STWICJW.AGI

Layout By:
Collin Witherow

Date:4/19/2022

Scale 1" = 16'
0 32 64

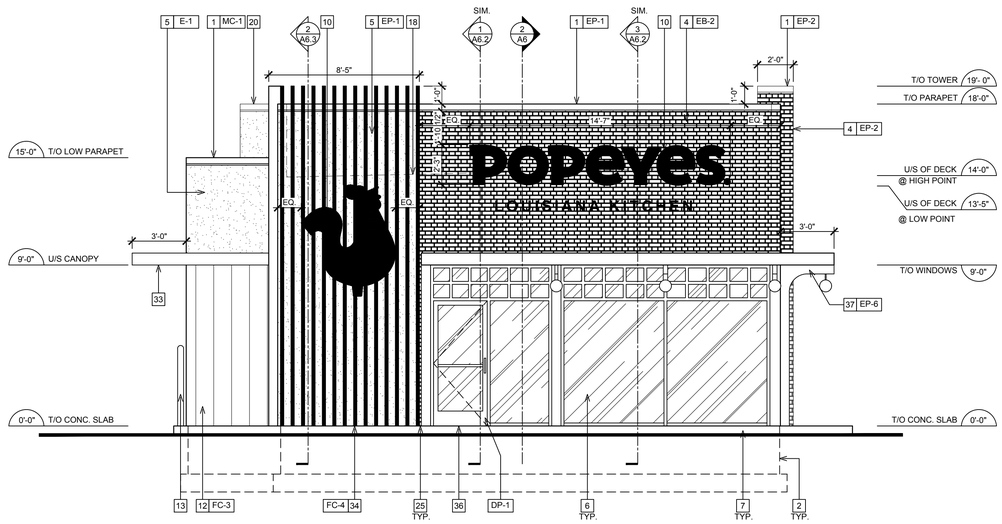

1 A5 **PROPOSED FRONT ELEVATION**

SCALE: 1/4"=1' - 0"

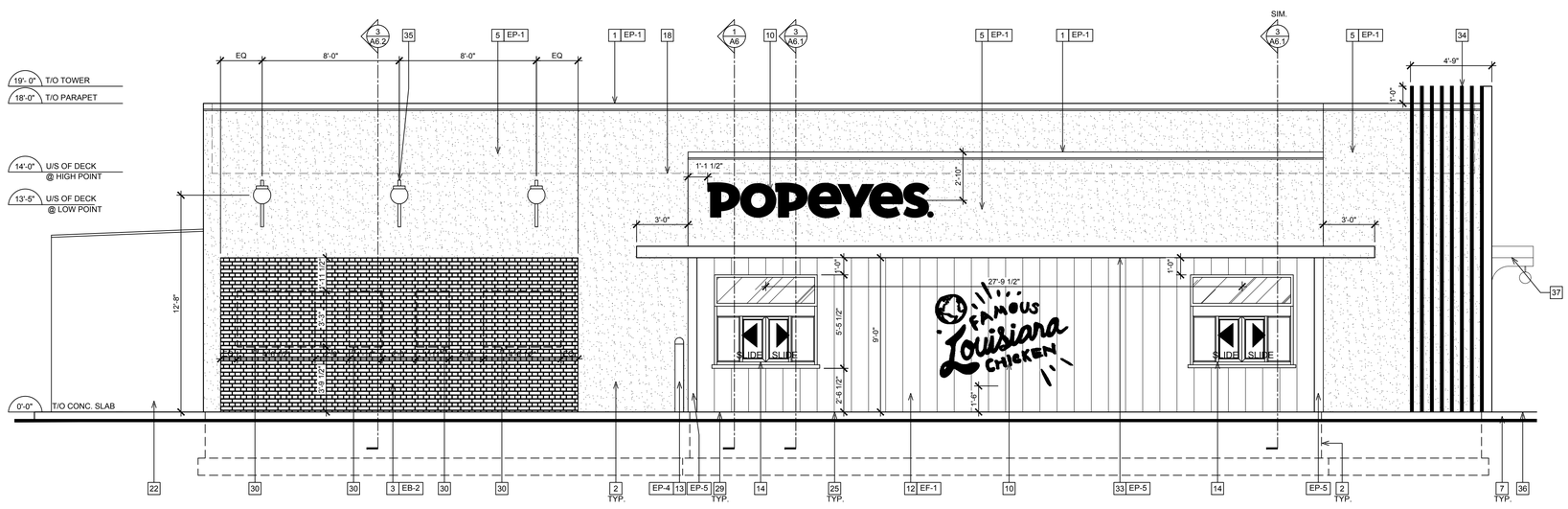

2 A5 **PROPOSED DT ELEVATION**

SCALE: 1/4"=1' - 0"

EXTERIOR ELEVATION NOTES

1. PRE-FINISHED METAL CAP FLASHING C/W DRIP.
2. G.C TO PROVIDE AND INSTALL DOUBLE LAYER OF REINFORCING MESH TO MIN. 2'-2" ABOVE GRADE AT ALL EIFS LOCATIONS (TYP.) IN ORDER TO ATTAIN ABUSE RESISTANCE STUCCO SYSTEM.
3. NICHIHA VINTAGEBRICK, COLOR: ALEXANDRIA BUFF. REFER TO POPEYES MASTER SCHEDULE.
4. NICHIHA VINTAGEBRICK, COLOR: WHITE WASH. REFER TO POPEYES MASTER SCHEDULE.
5. EIFS. REFER TO POPEYES MASTER SCHEDULE.
6. PRE-FINISHED 'BLACK ANODIZED' ALUMINUM STOREFRONT SYSTEM WITH INSULATED GLAZING.
7. EXPOSED FOUNDATION TO BE PARGED AND FREE OF IMPERFECTIONS.
8. GAS UTILITY METER.
9. REFER TO STRUCTURAL DRAWINGS FOR FOUNDATION WALL AND FOOTING DETAILS.
10. INTERNALLY ILLUMINATED BUILDING SIGNAGE PROVIDED AND INSTALLED BY SIGN COMPANY. G.C TO PROVIDE AND INSTALL EXTERIOR GRADE PRESSURE TREATED PLYWOOD BACKING AND ALL FINAL ELECTRICAL CONNECTION. SIGN MANUFACTURER SHALL OBTAIN STRUCTURALLY SEALED DRAWINGS AND SIGNAGE PERMITS FROM THE CITY BASED ON LOCAL REQUIREMENTS. G.C SHALL VERIFY ACTUAL LOCATION & SIZE OF SIGNS WITH SIGN MANUFACTURER'S APPROVED DRAWINGS AND COORDINATE LOCATIONS OF BLOCKING AND UTILITIES. G.C TO COORDINATE WITH SIGN INSTALLER TO USE VHM DRILL BIT WHILE DRILLING FOR ELECTRICAL FEED LINES AND SIGNAGE FASTENERS. ALL ELEMENTS PROVIDED BY SIGNAGE FABRICATOR TO BE REVIEWED AND APPROVED BY POPEYES PRIOR TO PRODUCTION
11. NON-ILLUMINATED BUILDING SIGNAGE PROVIDED AND INSTALLED BY SIGN COMPANY. G.C TO PROVIDE AND INSTALL EXTERIOR GRADE PRESSURE TREATED PLYWOOD BACKING.. SIGN MANUFACTURER SHALL OBTAIN STRUCTURALLY SEALED DRAWINGS AND SIGNAGE PERMITS FROM THE CITY BASED ON LOCAL REQUIREMENTS. G.C SHALL VERIFY ACTUAL LOCATION & SIZE OF SIGNS WITH SIGN MANUFACTURER'S APPROVED DRAWINGS AND COORDINATE LOCATIONS OF BLOCKING AND UTILITIES. G.C TO COORDINATE WITH SIGN INSTALLER TO USE VHM DRILL BIT WHILE DRILLING FOR ELECTRICAL FEED LINES AND SIGNAGE FASTENERS. ALL ELEMENTS PROVIDED BY SIGNAGE FABRICATOR TO BE REVIEWED AND APPROVED BY POPEYES PRIOR TO PRODUCTION
12. NICHIHA VINTAGE WOOD, COLOR: CEDAR. REFER TO POPEYES MASTER SCHEDULE.
13. PROVIDE & INSTALL 6" DIAMETER STEEL PIPE BOLLARD TOP AT 4'-6" A.F.F. G.C. TO PAINT "SAFETY YELLOW". REFER TO POPEYES MASTER SCHEDULE.
14. DRIVE-THRU WINDOW. REFER TO DRIVE-THRU WINDOW SCHEDULE ON SHEET A11.
15. N/A.
16. PRE-FINISHED GALVANIZED STEEL DOWNSPOUT & COLLECTOR BOX. G.C. TO COORDINATE WITH CIVIL ENGINEERS TO CONFIRM IF DOWNSPOUTS ARE SPLASHING ON CONCRETE PAD OR TIED TO THE STORM SEWER LINE. REFER TO MECHANICAL DRAWINGS.
17. N/A.
18. DASHED LINE INDICATES T/O OF ROOF BEHIND PARAPET.
19. C/T CABINET AND METER.
20. LINE OF PARAPET WALLS BEYOND.
21. GENERAL PURPOSE EXTERIOR LIGHTING FIXTURES.
22. WALK-IN COOLER/FREEZER FINISH TO BE COMPLETED BY MANUFACTURER.
23. N/A.
24. PRE-FINISHED GALVANIZED STEEL DOWNSPOUT & COLLECTOR BOX. G.C. TO COORDINATE CIVIL ENGINEERS TO CONFIRM IF DOWNSPOUTS ARE SPLASHING ON CONCRETE PAD OR TIED TO THE STORM SEWER LINE. REFER TO MECHANICAL DRAWINGS.
25. ALL BASE FLASHING TO MATCH ADJACENT MATERIAL COLORS.
26. HOSE BIB. G.C. TO PAINT. COLOUR TO MATCH ADJACENT STUCCO COORDINATE EXACT LOCATION WITH G.C. REFER TO MECHANICAL DRAWINGS.
27. ½" X ½" REVEAL LINE IN STUCCO FINISH. REFER TO DETAIL 3/A5.
28. DECORATIVE PANELS SUPPLY AND INSTALL BY SIGN COMPANY.
29. G.C TO PROVIDE CONCRETE CURB ALONG DRIVE-THRU LANE. CURB TO PROJECT 8" FROM FACE OF PANELS AND LENGTH OF CURB IS EXTENT OF FEATURE WALL.
30. MURAL GRAPHIC SUPPLY AND INSTALL BY SIGN COMPANY.
31. REAR EXIT DOOR TO BE PAINT WHITE.
32. WALL SCONCE SUPPLY AND INSTALL BY SIGN COMPANY.
33. PRE-FABRICATED CANOPIES W/ PRE-WIRED RECESSED LIGHTS ABOVE DRIVE-THRU SUPPLY BY SIGN COMPANY AND INSTALL BY G.C. ALL CANOPIES IN WALL SUPPORT BY G.C. REFER TO STRUCTURAL DRAWINGS.
34. VERTICAL SIMULATED WOOD SLATS. REFER TO POPEYES MASTER SCHEDULE.
35. WALL SCONCE LIGHTING. REFER TO ELECTRICAL SCHEDULE.
36. CONCRETE SIDEWALK (BY G.C). REFER TO SITE PLAN.
37. HORIZONTAL WOOD GRAIN ENTRANCE CANOPY W/ TEAL VERTICAL & HORIZONTAL SUPPORTS SUPPLY BY SIGN COMPANY AND INSTALL BY G.C. PRE-WIRED LED LIGHT GLOBE FIXTURE.

GENERAL NOTES

1. SEALANT / CAULKING AROUND DOOR / WINDOW FRAMES. COLOUR: TO MATCH WINDOW / DOOR FRAMES.
2. THE CONTRACTOR SHALL BECOME FAMILIAR WITH AND FOLLOW ALL DRAWINGS AND SPECIFICATIONS.

SYMBOL LEGEND

1	NOTE REFERENCE REFER TO ELEVATION NOTES
FN#	FINISH TYPE

GLEASON ARCHITECTS, P.C.
769 Heartland Drive, Unit A
Sugar Grove, Illinois 60554
Phone: 630-466-8740
Fax: 630-466-8760
E-mail: thadgleason@gleasonarchitectpc.com

THESE DRAWINGS, INCLUDING ALL DESIGNS, DETAILS, SPECIFICATIONS AND INFORMATION, ARE THE SOLE PROPERTY AND COPYRIGHT OF GLEASON ARCHITECTS, P.C. AND ARE FOR USE ON THIS SPECIFIC PROJECT AND SHALL NOT BE USED ON ANY OTHER WORK WITHOUT THE AGREEMENT AND WRITTEN PERMISSION OF GLEASON ARCHITECTS, P.C.

ISSUED	DATE
FOR APPROVAL	
FOR PERMIT	12/17/13
FOR BID	
FOR CONST.	

REVISIONS	DATE
1	
2	
3	

PROJECT:
Popeyes LK
Lot 7-1 Kettle Park
Stoughton, WI

CLIENT:
Ryan Matthews

JOB NO.
DATE 02/23/2022
FILE
PLOT SCALE 1:1

OWNER APPROVAL

Signature

Date

SHEET TITLE
EXTERIOR ELEVATIONS
(FRONT AND DRIVE THRU)

SHEET NUMBER
A3.1

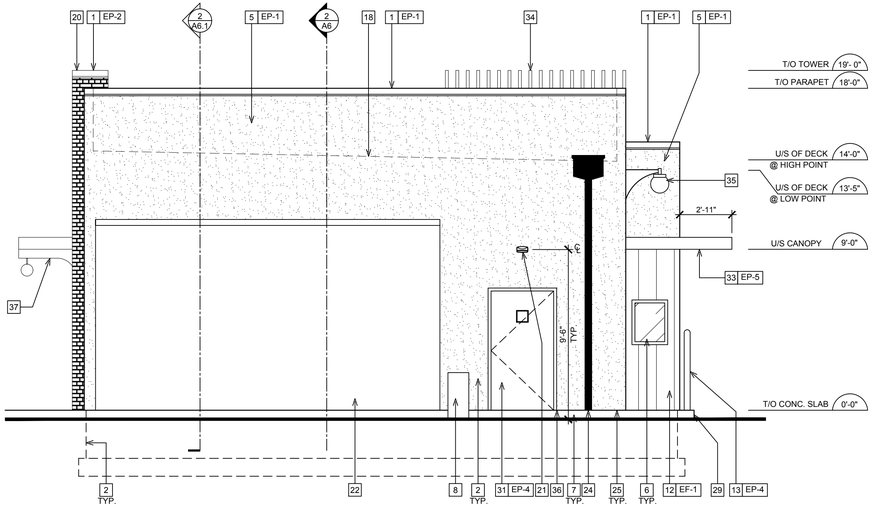

1 A5.1 PROPOSED REAR ELEVATION

SCALE: 1/4"=1' - 0"

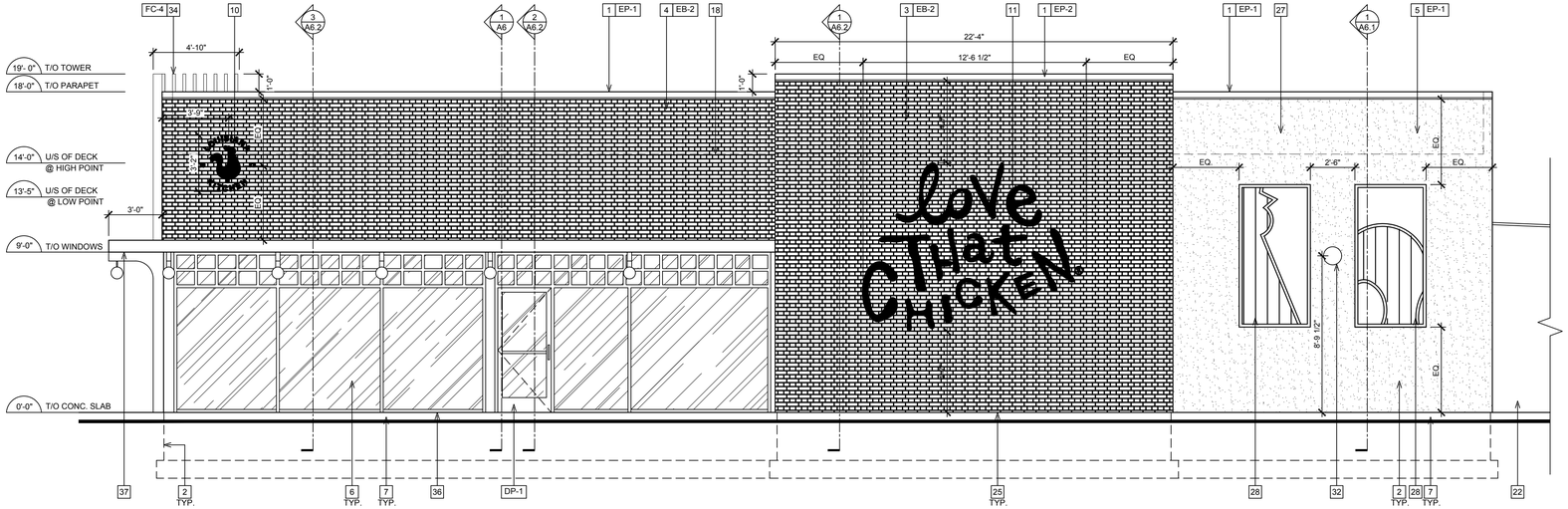

2 A5.1 PROPOSED SIDE ELEVATION

SCALE: 1/4"=1' - 0"

GENERAL NOTES

1. SEALANT / CAULKING AROUND DOOR / WINDOW FRAMES. COLOUR: TO MATCH WINDOW / DOOR FRAMES.
2. THE CONTRACTOR SHALL BECOME FAMILIAR WITH AND FOLLOW ALL DRAWINGS AND SPECIFICATIONS.

SYMBOL LEGEND

1	NOTE REFERENCE REFER TO ELEVATION NOTES
FN#	FINISH TYPE

EXTERIOR ELEVATION NOTES

1. PRE-FINISHED METAL CAP FLASHING C/W DRIP.
2. G.C TO PROVIDE AND INSTALL DOUBLE LAYER OF REINFORCING MESH TO MIN. 2'-2" ABOVE GRADE AT ALL EIFS LOCATIONS (TYP.) IN ORDER TO ATTAIN ABUSE RESISTANCE STUCCO SYSTEM.
3. NICHIHA VINTAGEBRICK, COLOR: ALEXANDRIA BUFF. REFER TO POPEYES MASTER SCHEDULE.
4. NICHIHA VINTAGEBRICK, COLOR: WHITE WASH. REFER TO POPEYES MASTER SCHEDULE.
5. EIFS. REFER TO POPEYES MASTER SCHEDULE.
6. PRE-FINISHED 'BLACK ANODIZED' ALUMINUM STOREFRONT SYSTEM WITH INSULATED GLAZING.
7. EXPOSED FOUNDATION TO BE PARGED AND FREE OF IMPERFECTIONS.
8. GAS UTILITY METER.
9. REFER TO STRUCTURAL DRAWINGS FOR FOUNDATION WALL AND FOOTING DETAILS.
10. INTERNALLY ILLUMINATED BUILDING SIGNAGE PROVIDED AND INSTALLED BY SIGN COMPANY. G.C TO PROVIDE AND INSTALL EXTERIOR GRADE PRESSURE TREATED PLYWOOD BACKING AND ALL FINAL ELECTRICAL CONNECTION. SIGN MANUFACTURER SHALL OBTAIN STRUCTURALLY SEALED DRAWINGS AND SIGNAGE PERMITS FROM THE CITY BASED ON LOCAL REQUIREMENTS. G.C SHALL VERIFY ACTUAL LOCATION & SIZE OF SIGNS WITH SIGN MANUFACTURER'S APPROVED DRAWINGS AND COORDINATE LOCATIONS OF BLOCKING AND UTILITIES. G.C TO COORDINATE WITH SIGN INSTALLER TO USE VHM DRILL BIT WHILE DRILLING FOR ELECTRICAL FEED LINES AND SIGNAGE FASTENERS. ALL ELEMENTS PROVIDED BY SIGNAGE FABRICATOR TO BE REVIEWED AND APPROVED BY POPEYES PRIOR TO PRODUCTION
11. NON-ILLUMINATED BUILDING SIGNAGE PROVIDED AND INSTALLED BY SIGN COMPANY. G.C TO PROVIDE AND INSTALL EXTERIOR GRADE PRESSURE TREATED PLYWOOD BACKING.. SIGN MANUFACTURER SHALL OBTAIN STRUCTURALLY SEALED DRAWINGS AND SIGNAGE PERMITS FROM THE CITY BASED ON LOCAL REQUIREMENTS. G.C SHALL VERIFY ACTUAL LOCATION & SIZE OF SIGNS WITH SIGN MANUFACTURER'S APPROVED DRAWINGS AND COORDINATE LOCATIONS OF BLOCKING AND UTILITIES. G.C TO COORDINATE WITH SIGN INSTALLER TO USE VHM DRILL BIT WHILE DRILLING FOR ELECTRICAL FEED LINES AND SIGNAGE FASTENERS. ALL ELEMENTS PROVIDED BY SIGNAGE FABRICATOR TO BE REVIEWED AND APPROVED BY POPEYES PRIOR TO PRODUCTION
12. NICHIHA VINTAGE WOOD, COLOR: CEDAR. REFER TO POPEYES MASTER SCHEDULE.
13. PROVIDE & INSTALL 6" DIAMETER STEEL PIPE BOLLARD TOP AT 4'-6" A.F.F. G.C. TO PAINT "SAFETY YELLOW". REFER TO POPEYES MASTER SCHEDULE.
14. DRIVE-THRU WINDOW. REFER TO DRIVE-THRU WINDOW SCHEDULE ON SHEET A11.
15. N/A.
16. PRE-FINISHED GALVANIZED STEEL DOWNSPOUT & COLLECTOR BOX. G.C. TO COORDINATE WITH CIVIL ENGINEERS TO CONFIRM IF DOWNSPOUTS ARE SPLASHING ON CONCRETE PAD OR TIED TO THE STORM SEWER LINE. REFER TO MECHANICAL DRAWINGS.
17. N/A.
18. DASHED LINE INDICATES T/O OF ROOF BEHIND PARAPET.
19. C/T CABINET AND METER.
20. LINE OF PARAPET WALLS BEYOND.
21. GENERAL PURPOSE EXTERIOR LIGHTING FIXTURES.
22. WALK-IN COOLER/FREEZER FINISH TO BE COMPLETED BY MANUFACTURER.
23. N/A.
24. PRE-FINISHED GALVANIZED STEEL DOWNSPOUT & COLLECTOR BOX. G.C. TO COORDINATE CIVIL ENGINEERS TO CONFIRM IF DOWNSPOUTS ARE SPLASHING ON CONCRETE PAD OR TIED TO THE STORM SEWER LINE. REFER TO MECHANICAL DRAWINGS.
25. ALL BASE FLASHING TO MATCH ADJACENT MATERIAL COLORS.
26. HOSE BIB. G.C. TO PAINT. COLOUR TO MATCH ADJACENT STUCCO COORDINATE EXACT LOCATION WITH G.C. REFER TO MECHANICAL DRAWINGS.
27. ½" X ½" REVEAL LINE IN STUCCO FINISH. REFER TO DETAIL 3/A5.
28. DECORATIVE PANELS SUPPLY AND INSTALL BY SIGN COMPANY.
29. G.C TO PROVIDE CONCRETE CURB ALONG DRIVE-THRU LANE. CURB TO PROJECT 8" FROM FACE OF PANELS AND LENGTH OF CURB IS EXTENT OF FEATURE WALL.
30. MURAL GRAPHIC SUPPLY AND INSTALL BY SIGN COMPANY.
31. REAR EXIT DOOR TO BE PAINT WHITE.
32. WALL SCONCE SUPPLY AND INSTALL BY SIGN COMPANY.
33. PRE-FABRICATED CANOPIES W/ PRE-WIRED RECESSED LIGHTS ABOVE DRIVE-THRU SUPPLY BY SIGN COMPANY AND INSTALL BY G.C. ALL CANOPIES IN WALL SUPPORT BY G.C. REFER TO STRUCTURAL DRAWINGS.
34. VERTICAL SIMULATED WOOD SLATS. REFER TO POPEYES MASTER SCHEDULE.
35. WALL SCONCE LIGHTING. REFER TO ELECTRICAL SCHEDULE.
36. CONCRETE SIDEWALK (BY G.C). REFER TO SITE PLAN.
37. HORIZONTAL WOOD GRAIN ENTRANCE CANOPY W/ TEAL VERTICAL & HORIZONTAL SUPPORTS SUPPLY BY SIGN COMPANY AND INSTALL BY G.C. PRE-WIRED LED LIGHT GLOBE FIXTURE.

GLEASON ARCHITECTS, P.C.
769 Heartland Drive, Unit A
Sugar Grove, Illinois 60554
Phone: 630-466-8740
Fax: 630-466-8760
E-mail: thadgleason@gleasonarchitectpc.com

THESE DRAWINGS, INCLUDING ALL DESIGNS, DETAILS, SPECIFICATIONS AND INFORMATION, ARE THE SOLE PROPERTY AND COPYRIGHT OF GLEASON ARCHITECTS, P.C. AND ARE FOR USE ON THIS SPECIFIC PROJECT AND SHALL NOT BE USED ON ANY OTHER WORK WITHOUT THE AGREEMENT AND WRITTEN PERMISSION OF GLEASON ARCHITECTS, P.C.

ISSUED	DATE
FOR APPROVAL	
FOR PERMIT	12/17/13
FOR BID	
FOR CONST.	

REVISIONS	DATE
1	
2	
3	

PROJECT:
Popeyes LK
Lot 7-1 Kettle Park
Stoughton, WI

CLIENT:
Ryan Matthews

JOB NO.
DATE 02/23/2022
FILE
PLOT SCALE 1:1

OWNER APPROVAL

Signature

Date

SHEET TITLE
EXTERIOR ELEVATIONS (SIDE AND REAR)

SHEET NUMBER
A3.2

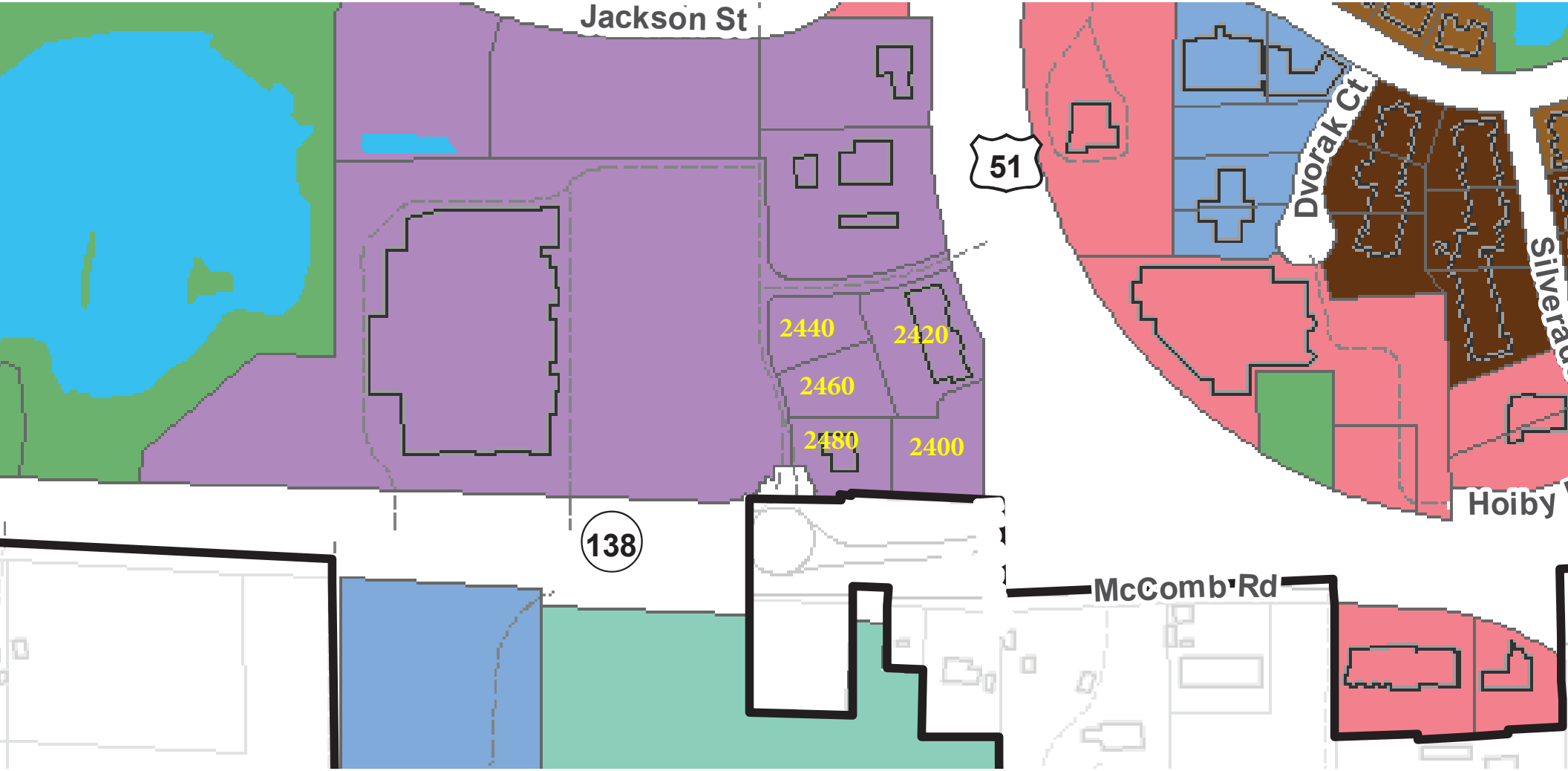
Jackson St
51
Dvorak Ct
2440
2420
2460
2480
2400
138
McComb Rd
Hoiby

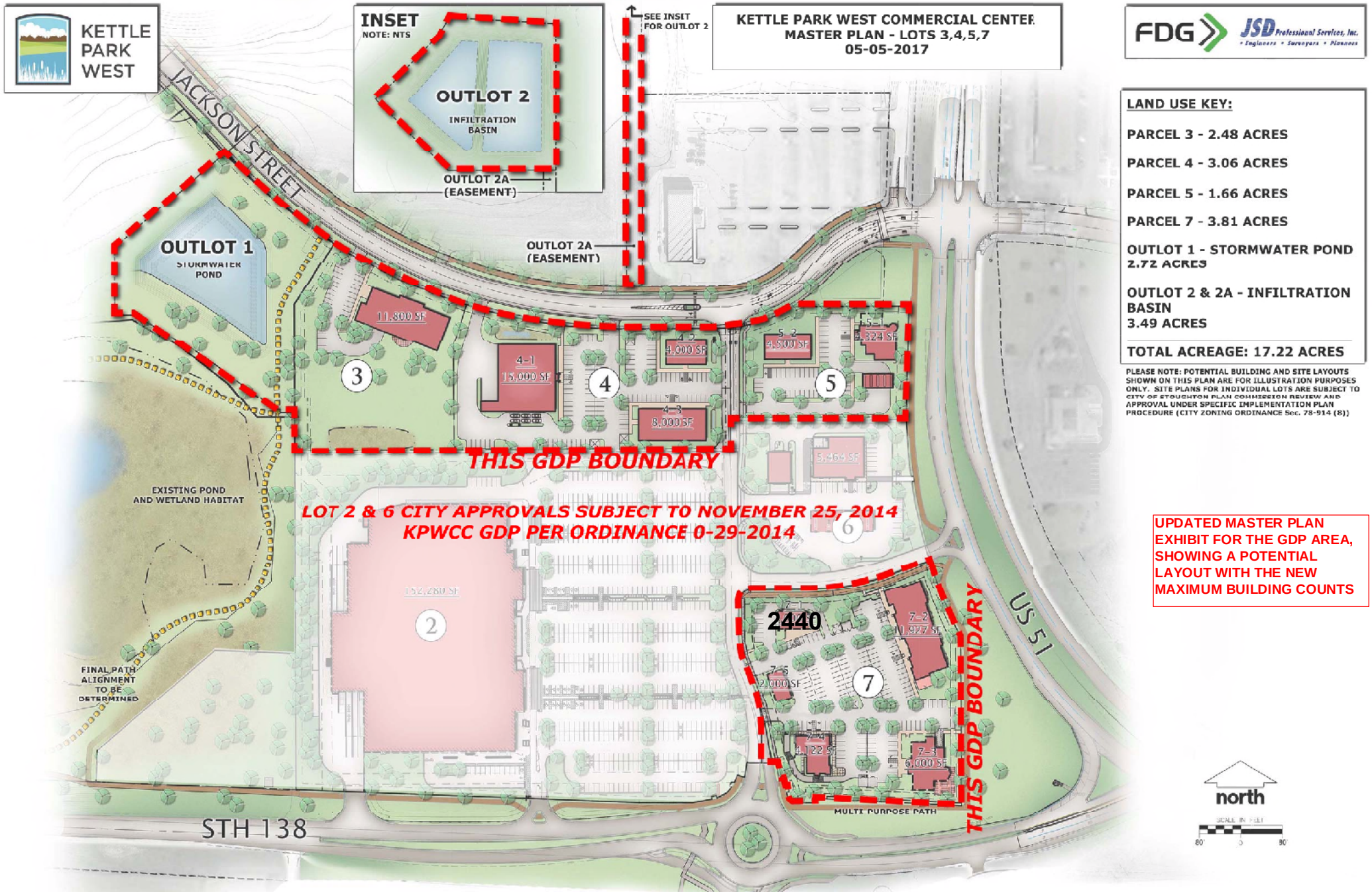
KETTLE PARK WEST
KETTLE PARK WEST COMMERCIAL CENTER
MASTER PLAN - LOTS 3,4,5,7
05-05-2017
FDG
JSD Professional Services, Inc.
Engineers • Surveyors • Planners
INSET
NOTE: NTS
OUTLOT 2
INFILTRATION BASIN
OUTLOT 2A (EASEMENT)
SEE INSET FOR OUTLOT 2
JACKSON STREET
OUTLOT 1
STORMWATER POND
OUTLOT 2A (EASEMENT)
11,800 SF
4-1
15,000 SF
4-2
4,000 SF
4-3
8,000 SF
5-2
4,500 SF
5-1
4,324 SF
3
4
5
THIS GDP BOUNDARY
5,464 SF
6
EXISTING POND AND WETLAND HABITAT
LOT 2 & 6 CITY APPROVALS SUBJECT TO NOVEMBER 25, 2014
KPWCC GDP PER ORDINANCE 0-29-2014
152,280 SF
2
2440
7-1
7-2
11,927 SF
7-5
2,000 SF
7
7-4
4,122 SF
7-3
6,000 SF
THIS GDP BOUNDARY
US 51
FINAL PATH ALIGNMENT TO BE DETERMINED
MULTI PURPOSE PATH
STH 138
north
SCALE IN FEET
80'
0
80'
LAND USE KEY:
PARCEL 3 - 2.48 ACRES
PARCEL 4 - 3.06 ACRES
PARCEL 5 - 1.66 ACRES
PARCEL 7 - 3.81 ACRES
OUTLOT 1 - STORMWATER POND 2.72 ACRES
OUTLOT 2 & 2A - INFILTRATION BASIN 3.49 ACRES
TOTAL ACREAGE: 17.22 ACRES
PLEASE NOTE: POTENTIAL BUILDING AND SITE LAYOUTS SHOWN ON THIS PLAN ARE FOR ILLUSTRATION PURPOSES ONLY. SITE PLANS FOR INDIVIDUAL LOTS ARE SUBJECT TO CITY OF STOUGHTON PLAN COMMISSION REVIEW AND APPROVAL UNDER SPECIFIC IMPLEMENTATION PLAN PROCEDURE (CITY ZONING ORDINANCE Sec. 78-914 (8))
UPDATED MASTER PLAN EXHIBIT FOR THE GDP AREA, SHOWING A POTENTIAL LAYOUT WITH THE NEW MAXIMUM BUILDING COUNTS

CITY OF STOUGHTON
DEPARTMENT OF PLANNING & DEVELOPMENT
207 S. Forrest Street, Stoughton, WI. 53589
www.cityofstoughton.com/planning

RODNEY J. SCHEEL
DIRECTOR
(608) 873-6619
fax: (608) 873-5519

May 4, 2022

JSD Professional Services, Inc.
Kevin Yeska
161 Horizon Drive, Suite 101
Verona, WI. 53593

Dear Mr. Yeska:

I have completed a final review of the proposed Specific Implementation Plan (SIP) for Popeye's Restaurant, 2440 State Highway 138 (Lot 7-1) – Plans updated 5/3/22. The Plan Commission will review this request on May 9, 2022 of which you will receive notice the week prior. Meetings are hybrid (in-person and by Zoom).

1. This property is zoned PD – Planned Development with an approved General Development Plan (GDP) dated 7/11/2017. **The portions of the undeveloped GDP will expire after five years which is July 11, 2022 unless an extension is granted by the Common Council after public hearing.** This SIP will be reviewed according to zoning code section 78-914(8), PD process Step 4: Specific Implementation Plan and 78-908, Site Plan Review.

   Indoor commercial entertainment (restaurant) and in-vehicle sales uses (drive-thru) are permitted as conditional uses in the PB district. The conditional use process is waived since the use was listed as a permitted use during the GDP approval process. The most comparable zoning district for these types of uses is PB – Planned Business.

   According to the approved GDP, Lot 7 (2400 – 2480 State Highway 138) is approved for up to 5 buildings and up to 30,000 square feet of gross floor area for all buildings combined. Lot 7 includes lots 7-1 (this proposal), 7-2 (developed), 7-3, 7-4 (developed), and 7-5.

2. The Planned Development: Specific Implementation Plan requirements per zoning code section 78-914(8) are as follows:
   A. A location map of the subject property as depicted on the planned land use map shall be provided. **Provided**
   B. A map of subject property showing all lands within 300 feet of the boundaries of the subject property, together with the names and addresses of the owners of all lands on said map including indication of current zoning of subject property. **N/A**
   C. A general description of the specific implementation plan including:
      a. Specific project themes and images; **Provided**
      b. The specific mix of dwelling units and/or land uses; **Provided**

c. Specific densities and intensities as described by dwelling units per acre, floor area ratio and impervious surface area ratio; **Provided**
d. Specific treatment of natural resources; **GDP**
e. Specific relationship to nearby properties and streets; **Provided**
f. A statement of rationale as to why the PD zoning is proposed which identifies barriers the applicant perceives in the form of requirements of standard zoning districts and opportunities for community betterment the applicant suggests are available through the proposed PD zoning; **GDP**
g. A complete list of zoning standards which will not be met and which will be more than met by the proposed SIP and the locations in which they apply shall be identified as compared to the most comparable zoning district. (In this case, the PB – Planned Business zoning district). **Provided**

D. A specific implementation plan drawing shall be provided with at least the following information in sufficient detail to make an evaluation against criteria for approval:
   a. <u>A site plan conforming to all requirements of subsection 78-908(3), site plan review and approval requirements</u>. If the proposed development is a large development per section 78-205(11), a proposed preliminary plat or conceptual plat may be required by the zoning administrator; **Site plan provided – see below for site plan review.**
   b. Location of recreational and open spaces areas and facilities; **Provided as part of the detailed neighborhood plan process.**
   c. Statistical data on minimum lot sizes in the development, the precise area of all development lots and pads, density/intensity of various parts of the development, floor area ratio, impervious surface area ratio and landscape surface area ratio of various land uses, expected staging, and any other plans required by the plan commission or common council; and **Determined as part of the GDP approval.**
   d. Notations related to the written information provided in C a) through g) above to specific areas on the GDP drawing. **Provided.**

E. A landscaping plan for subject property, specifying location, species, and installed size of all trees and shrubs. The plan shall include a chart which provides cumulative totals for each species, type and required location (foundation, yard, street, paved area and bufferyard) of all trees and shrubs. **Provided and reviewed below**

F. A series of building elevations for the entire exterior of the buildings including notes on materials and colors proposed. **Provided**

G. A general signage plan for the subject property. **Provided**

H. A general outline of the intended organizational structure for a property owners association, if any; deed restrictions and provisions for private provision of common services. **If applicable.**

I. A written description which demonstrates the full consistency of the proposed SIP with the approved GDP. **This review will check for consistency with the approved GDP.**

J. All variations between the requirements of the approved GDP zoning district and the proposed SIP development. **This review is based on the proposed single story building at lot 7-1 or 2440 State Highway 138.**

K. Proof of financing capability pertaining to construction and maintenance and operation of public works elements of the proposed development. **N/A.**
L. The area of the SIP may be only a portion of the area included in a previously approved GDP. **The submittal complies with this requirement.**
M. The SIP submission may include site plan and design information, allowing the plan commission to combine the design review and SIP review. Design review may, at the choice of the applicant, be deferred until a later time when specific site and building developments will be brought forth. **Site and design review is proposed.**
N. The plan commission or common council may specify other plans, documents, or schedules that must be submitted prior to consideration of approval of the SIP. **If applicable.**
O. The process for review and approval shall be identical to that for site plans per section 78-908, site plan review and approval and if the land is being divided per Chapter 66, Land Division. **See below.**
P. All portions of the SIP not fully developed within 5 years of final council approval shall expire. The common council may extend this 5 year period by up to 5 additional years via a majority vote following public hearing. Completed portions of the GDP shall retain the GDP status.

Planned Business District Requirements

1. An indoor commercial entertainment use is defined as follows: Indoor commercial entertainment land uses include all land uses which provide entertainment services primarily within an enclosed building. Outdoor seating or patio areas associated with a proposed indoor commercial entertainment land use shall be allowed subject to city approval of a site plan showing any such proposed outdoor seating or patio area. Such activities often have operating hours which extend significantly later than most other commercial land uses. Examples of such land uses include restaurants, taverns, theaters, health or fitness centers, all forms of training studios (dance, art, martial arts, etc.), bowling alleys, arcades, roller rinks, and pool halls. **Indoor Commercial Entertainment (restaurant/bar) uses are allowable as a conditional use. Indoor Commercial Entertainment is listed as a permitted use within the approved GDP so the conditional use process is waived. Any future planned outdoor seating will need to be approved by the Plan Commission.**

2. Regulations applicable to indoor commercial entertainment is as follows:
   a. If located on the same side of the building as abutting residentially zoned property, no customer entrance of any kind shall be permitted within 150 feet, or as far as possible, of a residentially zoned property. **N/A**
   b. Facility shall provide bufferyard with minimum opacity of .60 along all borders of the property abutting residentially zoned property (see section 78-610). **N/A**

3. Parking requirements for indoor commercial entertainment uses are one space per every three patron seats or lockers (whichever is greater); or one space per three persons at the maximum capacity of the establishment; (whichever is greater).
   We have been advised that the number of seats will be 20. Seven stalls are required while 11 stalls are provided.

4. In-vehicle sales and service uses in conjunction with an indoor commercial entertainment use are considered accessory to that use. Regulations applicable for in-vehicle sales and service are as follows:
   a. Clearly marked pedestrian crosswalks shall be provided for each walk-in customer access to the facility adjacent to the drive-through lane(s). **Site plan meets this requirement. See b. below.**

   b. The drive-through facility shall be designed so as to not impede or impair vehicular and pedestrian traffic movement, or exacerbate the potential for pedestrian/vehicular conflicts. **18 feet of width is required for drive lanes. We believe the 10-foot width for the drive-thru lanes are adequate. The aisle width requirement for 60 degree parking requires 16 feet and 90 degree parking requires 24 feet.**

   c. In no instance shall a drive-through facility be permitted to operate which endangers the public safety, even if such land use has been permitted under the provisions of this section. **Expected**

   d. The setback of any overhead canopy or similar structure shall be a minimum of ten feet from all street rights-of-way lines, a minimum of 20 feet from all residentially-zoned property lines, and shall be a minimum of five feet from all other property lines. The total height of any overhead canopy or similar structure shall not exceed 20 feet per the measurement of roof height. **N/A**

   e. All vehicular areas of the facility shall provide a surface paved with concrete or bituminous material which is designed to meet the requirements of a minimum four ton axle load. **Expected**

   f. Facility shall provide a bufferyard with a minimum opacity of .60 along all property borders abutting residentially zoned property (section 78-610). **N/A**

   g. <u>Interior curbs shall be used to separate driving areas from exterior fixtures such as</u> fuel pumps, vacuums, <u>menu boards</u>, canopy supports and <u>landscaped islands</u>. <u>Said curbs shall be a minimum of six inches high and be of a non-mountable design</u>. No curb protecting an exterior fixture shall be located closer than 25 feet to all property lines. **Expected.**

   In-vehicle sales uses are allowable as a conditional use. In-vehicle sales is listed as a permitted use within the approved GDP so the conditional use process is waived.

5. The parking requirements for in-vehicle sales is the same as for the indoor commercial entertainment use. Each drive-up lane shall have a minimum stacking length of 100 feet behind the pass through window and 40 feet beyond the pass through window. This requirement may be adjusted by the plan commission through the conditional use process. **The plan meets these requirements. See also #3 above.**

6. Public sidewalk is required along all public frontages and shall be delineated on the site plan. Sidewalk shall be 5 feet wide and a minimum of 6" through driveways and a minimum of 5" thick otherwise. **The pedestrian path is existing.**

7. All off-street parking and traffic circulation areas shall be paved with a hard, all-weather surface and completed prior to building occupancy. All parking spaces shall be clearly marked to indicate required spaces. **Expected.**

8. Accessible parking spaces shall be installed at a size, number, location, and with signage as specified by state and federal regulations. **Expected.**

9. Except for accessible parking stalls, the minimum parking stall length shall be 18 feet with a minimum width of 9 feet. **The plan meets this requirement.**

10. The parking aisle width for 90 degree parking shall be a minimum of 24 feet and 45 degree parking requires 12 feet. **The plan appears to meet these requirements.**

11. The building minimum setback and maximum height requirements are as follows: Front: 20 feet; Side: 10 feet; Rear: 20 feet; Maximum building height: 45 feet**. The plan meets these requirements.**

12. The minimum required landscape surface ratio (LSR) is 25%. **The GDP was approved with the intent to have an LSR of 25% for the whole site. This will need to be revisited as the other lots are developed.**

13. The maximum floor area ratio is 1. This is calculated by dividing the total floor area of all buildings by the gross site area. **The plan meets this requirement.**

14. All access drives shall have a minimum width of 18 feet. **The plan meets this requirement.**

15. All curb openings for access drives shall have a maximum width of 30 feet for non-residential uses, as measured at the right-of-way line. Access drives may be flared between the right-of-way line and the roadway up to a maximum of five additional feet and may be exceeded with explicit Plan Commission approval. **The drive access is existing.**

16. The off-street loading standards for large truck deliveries shall meet the zoning standards of 78-705 and Table 78-705(4). **If large trucks are anticipated, details will need to be provided to confirm this requirement.**

17. The minimum paved surface setback from a side and rear lot line is 5 feet while the minimum is 10 feet from a right-of-way line. **The approved GDP allows 0 setback for sites that have shared parking and access drives.**

18. Per section 78-704 (13) (a), bicycle parking is required equal to 10% of the automobile parking space requirement. **This requirement has been met.**

19. Except for exposed foundations not to exceed three feet in height from adjacent grade, non-single family development shall employ only high-quality, decorative exterior construction materials on the visible exterior of the following portions of all structures:
    - Any portion of the structure within 50 feet of an adjacent residentially zoned property;
    - Any portion of the structure located within 50 feet of a public right-of-way;
    - Any other portion of the structure visible from a public street… The following exterior construction materials shall not be considered "high quality, decorative": non-decorative concrete or cinder block, non-decorative concrete foundation walls or panels, non-decorative plywood, asphaltic siding, or other materials using exposed fastener systems or non-decorative surfaces as determined by the Planning Commission. However, such materials may be allowed by the Planning Commission as decorative elements.

    The proposed exterior materials appear to meet these requirements.

20. Architectural and design elements shall be compatible with the surrounding area and community standards and shall minimize user specific elements <u>as determined by the plan commission</u>. Metal panels with exposed exterior fasteners of the same color may be used on a maximum of 50 percent of the front side of the building. This material is not allowed within 50 feet of any customer or visitor entrance. **As determined by the Plan Commission.**

21. A landscaping plan is required to meet Article VI of the zoning code.
    The plan appears to meet all requirements.

22. Section 78-707, Exterior lighting standards, requires a maximum average on-site lighting of 2.4 footcandles. The maximum lighting as measured at the property line is 0.5 footcandles. The maximum fixture height shall be 25 feet from grade. The lighting element cannot be seen from any property zoned residential. **The photometric plan appears to meet these requirements.**

23. A gated trash enclosure with 6-foot fencing shall be delineated on the plan for the handling of waste. **The trash enclosure shall be constructed of some or all of the materials used on the main building. Details provided.**

24. A stormwater management and erosion control plan, application and fees are required. Dane County Land and Water Resources, the City's consultant, will review the plan and perform inspections. **The plan, application and fees have been submitted.**

25. Proposed utilities-including electrical transformers, water and sanitary sewer services, and storm sewer locations shall be shown on the plan. **Contact Jill Weiss, Stoughton Utilities Director at 608-873-3379 for questions related to electric, water and wastewater services.**

26. Required off-street parking shall not be used for snow storage. **This is expected.**

27. Any proposed signage will require a detailed plan and permit prior to installation. **Expected.**

28. State of Wisconsin approved building plans will be necessary prior to issuance of a building permit but are not necessary to begin the City review process. **The building setbacks will need to be staked and verified by a surveyor prior to pouring footings. An as-built survey will be required to confirm setbacks after construction.**

If you have any questions, please contact me at 608-646-0421

Sincerely,
City of Stoughton

Michael P. Stacey

Michael P. Stacey
Zoning Administrator

s:\planning\property log folder\2440 state highway 138\popeyes chix sip plans 4.22.22\popeyes final review may 2022.doc