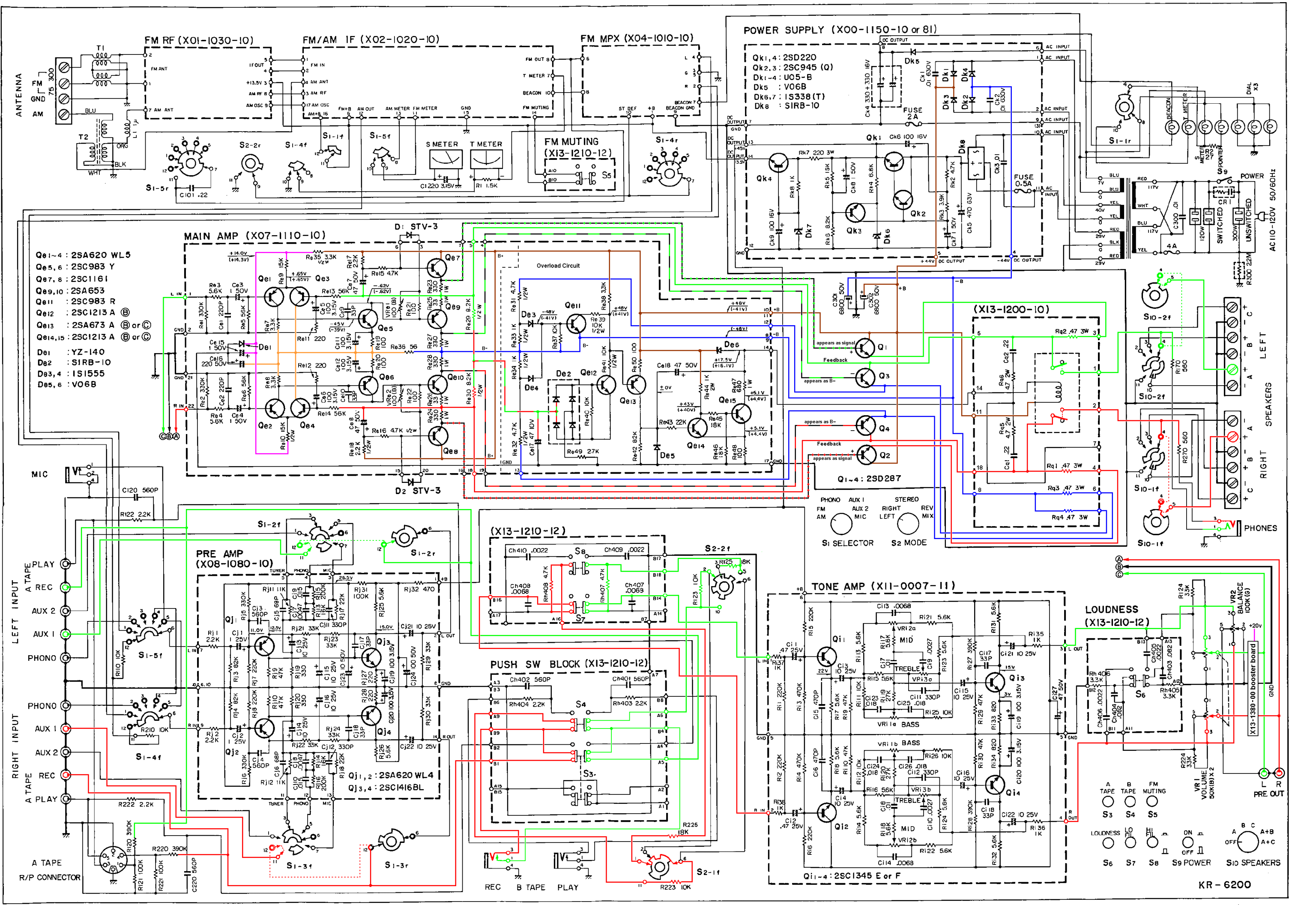
FM RF (X01-1030-10)
FM/AM IF (X02-1020-10)
FM MPX (X04-1010-10)
POWER SUPPLY (X00-1150-10 or 81)
Qk1,4 : 2SD220
Qk2,3 : 2SC945 (Q)
Dk1~4 : U05-B
Dk5 : V06B
Dk6,7 : 1S338(T)
Dk8 : SIRB-10
ANTENNA
FM
GND
AM
S METER
T METER
FM MUTING (X13-1210-12)
MAIN AMP (X07-1110-10)
Qe1~4 : 2SA620 WL5
Qe5,6 : 2SC983 Y
Qe7,8 : 2SC1161
Qe9,10 : 2SA653
Qe11 : 2SC983 R
Qe12 : 2SC1213 A (B)
Qe13 : 2SA673 A (B) or (C)
Qe14,15 : 2SC1213 A (B) or (C)
De1 : YZ-140
De2 : SIRB-10
De3,4 : 1S1555
De5,6 : V06B
Overload Circuit
Q1~4 : 2SD287
(X13-1200-10)
S1 SELECTOR
S2 MODE
PHONO
AUX 1
AUX 2
MIC
FM
AM
STEREO
RIGHT
LEFT
REV
MIX
SPEAKERS
LEFT
RIGHT
PHONES
POWER
AC110-120V 50/60Hz
MIC
LEFT INPUT
RIGHT INPUT
A TAPE
PLAY
REC
AUX 2
AUX 1
PHONO
A TAPE R/P CONNECTOR
PRE AMP (X08-1080-10)
Qj1,2 : 2SA620 WL4
Qj3,4 : 2SC1416BL
(X13-1210-12)
PUSH SW BLOCK (X13-1210-12)
TONE AMP (X11-0007-11)
Qi1~4 : 2SC1345 E or F
LOUDNESS (X13-1210-12)
X13-1380-00 booster board
VR1 VOLUME 50K(B) X 2
VR2 BALANCE 100K(G)
PRE OUT
A TAPE
B TAPE
FM MUTING
S3
S4
S5
LOUDNESS
S6
S7
S8
S9 POWER
S10 SPEAKERS
KR-6200