XFIIRE PIPE SIZES				
	1 UNIT PORT	MAX FLOW	2 UNITS	MAX FLOW
300B	2	38	2	76
400B	2	50	2-1/2	100
500B	2	62	2-1/2	124
650B	2	80	3	160
800B	2	90	4	180
1000B	2-1/2	90	4	180

THIS PIPING DIAGRAM IS RAYPAK'S RECOMMENDATION AND IS NOT INTENDED TO TO REPLACE AN ENGINEERING PIPING SYSTEM DESIGN BY A PROFESSIONAL ENGINEER.

REVISIONS						
REV	ZONE	DESCRIPTION	E.O.	BY	DATE	CHECK
0		INITIAL RELEASE.		DRB	1-1-24	

David R Baldwin Digitally signed by David R Baldwin Date: 2024.01.22 08:51:25 -08'00'

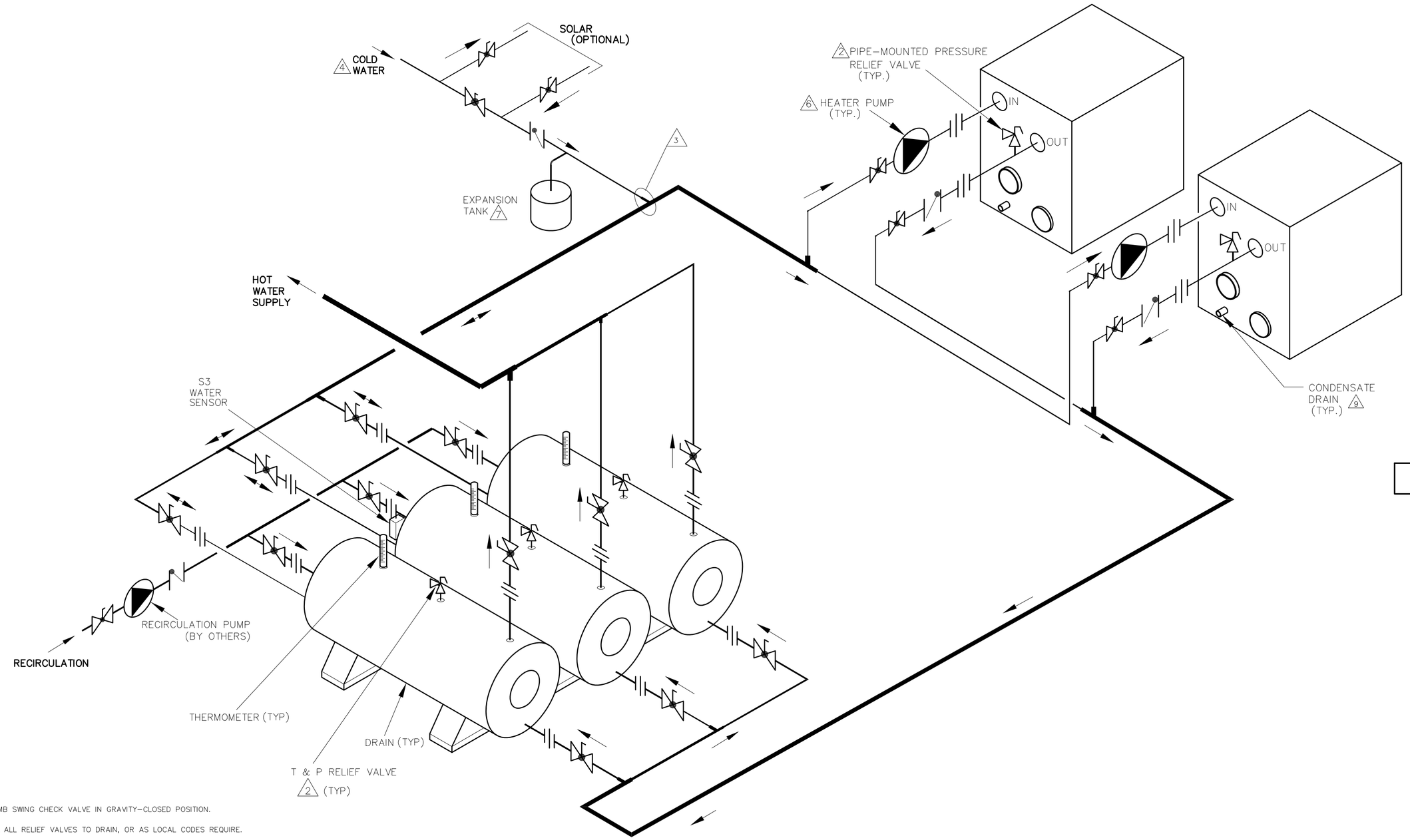

8963

KEY

- PRESSURE RELIEF VALVE
- PUMP
- UNION
- CHECK VALVE
- BALL VALVE
- THERMOMETER

NOTES:

1. PLUMB SWING CHECK VALVE IN GRAVITY-CLOSED POSITION.
2. PIPE ALL RELIEF VALVES TO DRAIN, OR AS LOCAL CODES REQUIRE.
3. LOCATE TEE AS CLOSE AS POSSIBLE TO TANK.
4. INSTALL COLD WATER BETWEEN HEATER INLET AND TANK.
5. SEE CHART "PIPE SIZES" FOR PIPE SIZES CALCULATED AT MAXIMUM FLOW, NOT TO EXCEED 7.5 FT/SEC.
6. PUMP SIZING BASED ON MAX EQUIVALENT LENGTH OF 100 FT OF PIPING BETWEEN TANK AND HEATER. IF DISTANCE IS GREATER, THE PUMP MUST BE SIZED TO ACCOMMODATE INCREASE IN PIPING-RELATED LOSSES.
7. PROVIDE FOR THERMAL EXPANSION OF HOT WATER IF A BACKFLOW PREVENTER, CHECK VALVE, WATER METER, OR PRESSURE REDUCING VALVE IS INSTALLED IN THE COLD WATER LINE.
8. **IF HIGH-TEMP HOT WATER SETPOINT EXCEEDS 160°F WITH MAX FLOW, SPECIFY "H" BOILERS INSTEAD OF "WH" WATER HEATERS.**
9. CONDENSATE MUST BE PIPED TO AN APPROVED DRAIN. LOCAL CODE MAY REQUIRE PH TREATMENT PRIOR TO DRAIN.

GUARANTEED 80% DRAW WITHOUT TEMPERATURE DROP, USE RAYPAK HEATER, TANK, SIZING TABLE AND HOOK-UP DATA

ACAD: 8963. DWG

HEATERS SHOWN REPRESENT VARIOUS MODELS. BECAUSE INDIVIDUAL MODELS WILL VARY IN DESIGN AND SIZING, SEE EACH SPECIFIC HEATER TYPE FOR DETAILS.

UNLESS OTHERWISE SPECIFIED:
ALL UNITS ARE IN INCHES
FRACTIONS ±1/32 ANGLES ±1°
X. = ±.12 X.X = ±.06
X.XX = ±.03 X.XXX = ±.010
DRAFT___ WALL___ RADII___
CONCENTRICITIES .020 DIA.
SQUARENESS .015 IN./IN.
BREAK EDGES .015 MAX.
SURFACE FINISH PER ASME Y14.36M-1996

APPROVED: Steve Thurlkill	DATE: Digitally signed by Steve Thurlkill Date: 2024.01.19 16:45:39 -08'00'	Raypak OXNARD, CALIFORNIA	
CHECKED	DATE		
DRAWN D BALDWIN	DATE 01-01-2024	E.O. SPR	SCALE NONE

RAYPAK PROPRIETARY AND CONFIDENTIAL INFORMATION
This drawing contains Confidential and Proprietary Information of Raypak, Inc. All rights reserved by Raypak, Inc.

TITLE: PIPING, UNI-TEMP 60: 2 XFIIRE, 3 H TANKS ALT

MAT'L.	SERIES/MODEL	SIZE	DWG. NO.	REV
	WH 300B-1000B	C	8963	